AUTHENTICATED
U.S. GOVERNMENT
INFORMATION
GPO

SUBCHAPTER B—COMMON CARRIER SERVICES (CONTINUED)

PART 41—TELEGRAPH AND TELEPHONE FRANKS

DEFINITIONS

Sec.
41.1 Definition of terms as used in this part.

GENERAL APPLICATION OF RULES

41.11 Services to which rules apply.
41.12 Persons to whom rules apply.
41.13 Carriers, services, and persons to which rules do not apply.

LIMITATION AND FORM OF ISSUANCE

41.21 Amount of free service permitted.
41.22 Name of person.

ADMINISTRATIVE REGULATIONS

41.31 Records to be maintained and reports to be filed.
41.32 Existing franks not conforming declared void.

AUTHORITY: Sec. 4, 48 Stat. 1066, as amended; 47 U.S.C. 154. Interpret or apply sec. 210, 48 Stat. 1073, as amended (47 U.S.C. 210).

SOURCE: 28 FR 13200, Dec. 5, 1963, unless otherwise noted.

DEFINITIONS

§41.1 Definition of terms as used in this part.

As used in this part:

(a) The term *frank* means any authority which authorizes free, or partially free, service.

(b) The term *families* means the wives, husbands, minor children, and other dependents of the officers, employees, or agents permitted to receive and use franks, but no other person.

(c) The terms *officer, agent,* and *employee* include furloughed, pensioned, and superannuated officers, agents, and employees.

GENERAL APPLICATION OF RULES

§41.11 Services to which rules apply.

Franks valid for interstate or foreign telegraph or telephone service may be issued or used and free service may be rendered only in accordance with the provisions in this part.

§41.12 Persons to whom rules apply.

Full time officers, agents, and employees, and their families, of railroad companies, merchant ship companies, motor bus companies, air transport companies, telephone companies, telegraph companies, sleeping car companies, express companies, and pipeline companies (common carriers not subject to the Communications Act of 1934, as amended), may, at the discretion of carriers subject to the Act, receive at less than regularly established rates applicable to the service rendered.

§41.13 Carriers, services, and persons to which rules do not apply.

The rules in this part shall not apply to:

(a) Services rendered pursuant to lawful contracts for exchange of services under section 201(b) of the Act and which contracts are filed with the Commission, any free service rendered by a cable company pursuant to any obligation of its landing license, or any service rendered pursuant to any rule or order issued under the authority transferred by section 601 of the Act.

(b) Except as provided in this part, services rendered in connection with situations involving the safety of life and property, including hydrographic reports, weather reports, reports regarding aids to navigation and medical assistance to injured or sick persons on ships and aircraft at sea, as provided in section 359(e) of the Act, or in furnishing of reports of positions of ships at sea to newspapers of general circulation, as provided in section 201(b) of the Act.

(c) Free or concession service now or hereafter granted to officers, agents, or employees of common carriers subject to the Act, and to their families.

(d) Service rendered pursuant to the provisions of §2.405 of this chapter.

LIMITATION AND FORM OF ISSUANCE

§ 41.21 Amount of free service permitted.

No franks shall be issued by any carrier authorizing free service to any person on which the published charges would, in the aggregate, exceed $50 in any 1 calendar year; nor shall any person use or attempt to use any frank in any calendar year for free service on which the charges at the duly published rates would, in the aggregate, exceed $50.

§ 41.22 Name of person.

Each frank shall be issued by a duly authorized officer of the carrier granting the privilege and shall show the name of the person to whom it is issued; and it shall be valid only for service rendered that person.

ADMINISTRATIVE REGULATIONS

§ 41.31 Records to be maintained and reports to be filed.

Common carriers subject to the Act shall maintain records and file reports as follows:

(a) Each such carrier shall maintain its records in such manner as to reflect at all times the name and address of every person holding a telegraph or telephone frank and the office, employment or relationship held by each such person entitling him to a frank; and each such carrier shall keep such basic records as would enable it, if ordered by the Commission, to compile a statement for the last preceding calendar year prior to such order or for any other period during which it is required by other rules to retain such records, showing the above information together with the number of franked communications handled under each frank during such period and the aggregate charges in dollars which would have accrued to the carrier for all of the free service rendered under each frank during such period if charges for all such communications had been collected at the published tariff rates.

(b) With respect to the communications referred to in § 41.13 every carrier subject to the Act shall maintain its records in such a manner as to show the number of each class of such communications handled free of charge: *Provided,* That with respect to personal telephone calls of officers, agents, or employees of common carriers subject to the Act made free of charge or at reduced rates from telephone company official stations it shall be sufficient, in lieu of such record maintenance, if the carrier be at all times prepared, upon appropriate request, to make studies which will show the number of each class of such communications handled free of charge or at reduced rates.

(c) Each such carrier shall maintain its records in such a manner as to show the number of reports of positions of ships at sea furnished to newspapers of general circulation without charge, or at nominal charges, as authorized in section 201(b) of the Act.

§ 41.32 Existing franks not conforming declared void.

All outstanding franks which do not conform to the rules in this part shall be void after August 11, 1939.

PART 42—PRESERVATION OF RECORDS OF COMMUNICATION COMMON CARRIERS

APPLICABILITY

Sec.
42.01 Applicability.

GENERAL INSTRUCTIONS

42.1 Scope of the regulations in this part.
42.2 Designation of a supervisory official.
42.3 Protection and storage of records.
42.4 Index of records.
42.5 Preparation and preservation of reproductions of original records.
42.6 Retention of telephone toll records.
42.7 Retention of other records.

AUTHORITY: Sec. 4(i), 48 Stat. 1066, as amended, 47 U.S.C. 154(i). Interprets or applies secs. 219 and 220, 48 Stat. 1077–78, 47 U.S.C. 219, 220.

SOURCE: 51 FR 32653, Sept. 15, 1986, unless otherwise noted.

APPLICABILITY

§ 42.01 Applicability.

This part prescribes the regulations governing the preservation of records of communication common carriers

that are fully subject to the jurisdiction of the Commission.

GENERAL INSTRUCTIONS

§42.1 Scope of the regulations in this part.

(a) The regulations in this part apply to all accounts, records, memoranda, documents, papers, and correspondence prepared by or on behalf of the carrier as well as those which come into its possession in connection with the acquisition of property, such as by purchase, consolidation, merger, etc.

(b) The regulations in this part shall not be construed as requiring the preparation of accounts, records, or memoranda not required to be prepared by other regulations, such as the Uniform System of Accounts, except as provided hereinafter.

(c) The regulations in this part shall not be construed as excusing compliance with any other lawful requirement for the preservation of records.

§42.2 Designation of a supervisory official.

Each carrier subject to the regulations in this part shall designate one or more officials to supervise the preservation of its records.

§42.3 Protection and storage of records.

The carrier shall protect records subject to the regulations in this part from damage from fires, and other hazards and, in the selection of storage spaces, safeguard the records from unnecessary exposure to deterioration.

§42.4 Index of records.

Each carrier shall maintain at its operating company headquarters a master index of records. The master index shall identify the records retained, the related retention period, and the locations where the records are maintained. The master index shall be subject to review by Commission staff and the Commission shall reserve the right to add records, or lengthen retention periods upon finding that retention periods may be insufficient for its regulatory purposes. When any records are lost or destroyed before expiration of the retention period set forth in the master index, a certified statement shall be added to the master index, as soon as practicable, listing, as far as may be determined, the records lost or destroyed and describing the circumstances of the premature loss or destruction. At each office of the carrier where records are kept or stored, the carrier shall arrange, file, and currently index the records on site so that they may be readily identified and made available to representatives of the Commission.

§42.5 Preparation and preservation of reproductions of original records.

(a) Each carrier may use a retention medium of its choice to preserve records in lieu of original records, provided that they observe the requirements of paragraphs (b) and (c) of this section.

(b) A paper or microfilm record need not be created to satisfy the requirements of this part if the record is initially prepared in machine-readable medium such as punched cards, magnetic tapes, and disks. Each record kept in a machine-readable medium shall be accompanied by a statement clearly indicating the type of data included in the record and certifying that the information contained in it has been accurately duplicated. This statement shall be executed by a person duplicating the records. The records shall be indexed and retained in such a manner that they are easily accessible, and the carrier shall have the facilities available to locate, identify and reproduce the records in readable form without loss of clarity.

(c) Records may be retained on microfilm provided they meet the requirements of the Federal Business Records Act (28 U.S.C. 1732).

§42.6 Retention of telephone toll records.

Each carrier that offers or bills toll telephone service shall retain for a period of 18 months such records as are necessary to provide the following billing information about telephone toll calls: the name, address, and telephone number of the caller, telephone number called, date, time and length of the call. Each carrier shall retain this information for toll calls that it bills

whether it is billing its own toll service customers for toll calls or billing customers for another carrier.

[51 FR 39536, Oct. 29, 1986]

§ 42.7 Retention of other records.

Except as specified in § 42.6, each carrier shall retain records identified in its master index of records for the period established therein. Records relevant to complaint proceedings not already contained in the index of records should be added to the index as soon as a complaint is filed and retained until final disposition of the complaint. Records a carrier is directed to retain as the result of a proceeding or inquiry by the Commission to the extent not already contained in the index will also be added to the index and retained until final disposition of the proceeding or inquiry.

PART 43—REPORTS OF COMMUNICATION COMMON CARRIERS AND CERTAIN AFFILIATES

Sec.

43.01 Applicability.
43.21 Annual reports of carriers and certain affiliates.
43.22 Quarterly reports of communication common carriers.
43.41 Reports on inside wiring services.
43.43 Reports of proposed changes in depreciation rates.
43.51 Contracts and concessions.
43.53 Reports regarding division of international toll communication charges.
43.61 Reports of international telecommunications traffic.
43.72 [Reserved]
43.81 Reports of carriers owned by foreign telecommunications entities.
43.82 International circuit status reports.

AUTHORITY: 47 U.S.C. 154.

SOURCE: 28 FR 13214, Dec. 5, 1963, unless otherwise noted.

§ 43.01 Applicability.

(a) The sections in this part include requirements which have been promulgated under authority of sections 211 and 219 of the Communications Act of 1934, as amended, with respect to the filing by communication common carriers and certain of their affiliates of periodic reports and certain other data, but do not include certain requirements relating to the filing of information with respect to specific services, accounting systems and other matters incorporated in other parts of this chapter.

(b) Carriers becoming subject to the provisions of the several sections of this part for the first time, should, within thirty (30) days of becoming subject, file the required data as set forth in the various sections of the part.

§ 43.21 Annual reports of carriers and certain affiliates.

(a) Communication common carriers having annual operating revenues in excess of the indexed revenue threshold, as defined in § 32.9000, and certain companies (as indicated in paragraph (c) of this section) directly or indirectly controlling such carriers shall file with the Commission annual reports or an annual letter as provided in this section. Except as provided in paragraphs (c), (e), (f), and (g) of this section, each annual report required by this section shall be filed not later than March 31 of each year, covering the preceding calendar year. It shall be filed on the appropriate report form prescribed by the Commission (see § 1.785 of this chapter) and shall contain full and specific answers to all questions propounded and information requested in the currently effective report forms. The number of copies to be filed shall be specified in the applicable report form. At least one copy of this report shall be signed on the signature page by the responsible accounting officer. A copy of each annual report shall be as retained in the principal office of the respondent and shall be filed in such manner to be readily available for reference and inspection.

(b) Each communication common carrier that has separate departments or divisions for the conduct of its common carrier operations and its noncarrier activities, shall file with the Commission a supplemental annual report with respect to its common carrier operations, exclusively, and a supplemental annual report applicable only to its non-carrier operations. Each such report shall be prepared on the basis of the accounting performed for the respective departments prior to

elimination of intra-company items and shall be accompanied by a statement of consolidation and eliminations or other explanation showing how the consolidated report submitted in compliance with paragraph (a) of this section was developed. Each such supplemental report shall be completed in its entirety wherever applicable to the respective departments, except that any schedule or statement that would be an exact duplicate of the corresponding schedule or statement in the consolidated report may be omitted from the supplemental report if proper annotation is made.

(c) Each company, not itself a communication common carrier, that directly or indirectly controls any communication common carrier that has annual operating revenues equal to or above the indexed revenue threshold shall file annually with the Commission, not later than the date prescribed by the Securities and Exchange Commission for its purposes, two complete copies of any annual report Forms 10–K (or any superseding form) filed with that Commission.

(d) Each miscellaneous common carrier (as defined by §21.2 of this chapter) with operating revenues for a calendar year in excess of the indexed revenue threshold shall file with the Common Carrier Bureau Chief a letter showing its operating revenues for that year and the value of its total communications plant at the end of that year. Each record carrier with operating revenues for a calendar year in excess of three-fourths of the indexed revenue threshold shall file a letter showing selected income statement and balance sheet items for that year with the Common Carrier Bureau Chief. These letters must be filed by March 31 of the following year.

(e) Each communications common carrier required by order to file a manual allocating its costs between regulated and nonregulated operations shall file, on or before April 1:

(1) A three-year forecast of regulated and nonregulated use of network plant for the current calendar year and the two calendar years following, and investment pool projections and allocations for the current calendar year; and

(2) A report of the actual use of network plant investment for the prior calendar year.

(f) Each local exchange carrier with annual operating revenues equal to or above the indexed revenue threshold shall file, no later than April 1 of each year, reports showing:

(1) Its revenues, expenses and investment for all accounts established in part 32 of this chapter, on an operating company basis,

(2) The same part 32 of this chapter, on a study area basis, with data for regulated and nonregulated operations for those accounts which are related to the carrier's revenue requirement, and

(3) The separations categories on a study area basis, with each category further divided into access elements and a nonaccess interstate category.

(g) Each local exchange carrier with operating revenues for the preceding year that are equal to or above the indexed revenue threshold shall file, no later than April 1 of each year, a report showing for the previous calendar year its revenues, expenses, taxes, plant in service, other investment and depreciation reserves, and such other data as are required by the Commission, on computer media prescribed by the Commission. The total operating results shall be allocated between regulated and nonregulated operations, and the regulated data shall be further divided into the following categories: State and interstate, and the interstate will be further divided into common line, traffic sensitive access, special access and nonaccess.

[28 FR 13214, Dec. 5, 1963, as amended at 49 FR 10122, Mar. 19, 1984; 50 FR 41153, Oct. 9, 1985; 51 FR 37024, Oct. 17, 1986; 52 FR 35918, Sept. 24, 1987; 53 FR 47819, Nov. 28, 1988; 54 FR 49762, Dec. 1, 1989; 58 FR 36143, July 6, 1993; 59 FR 19648, Apr. 25, 1994; 61 FR 50245, Sept. 25, 1996]

§43.22 Quarterly reports of communication common carriers.

Each designated interstate carrier with operating revenues for the preceding year that are equal to or above the indexed revenue threshold shall file, by March 31, June 30, September 30, and December 31 of each year, a report showing for the previous calendar quarter its revenues, expenses, taxes, plant

in service, other investment and depreciation reserves, and such other data as are required by the Commission, on computer media prescribed by the Commission. The total operating results shall be allocated between regulated and nonregulated operations, and the regulated data shall be further divided into the following categories: State and interstate, and the interstate will be further divided into the major services.

[61 FR 50246, Sept. 25, 1996]

§ 43.41 Reports on inside wiring services.

Each local exchange carrier with annual operating revenues equal to or above the indexed revenue threshold shall file, within thirty (30) days of its publication or release, a copy of any state or local statute, rule, order, or other document that regulates, or proposes to regulate, the price or prices the local exchange carrier charges for inside wiring services. This rule applies only to the local exchange carrier serving the greatest number of access lines within the portions of the state that are, or would be, subject to the state regulation.

[57 FR 9671, Mar. 20, 1992, as amended at 61 FR 50246, Sept. 25, 1996]

§ 43.43 Reports of proposed changes in depreciation rates.

(a) Each communication common carrier with annual operating revenues equal to or above the indexed revenue threshold and which has been found by this Commission to be a dominant carrier with respect to any communications service shall, before making any change in the depreciation rates applicable to its operated plant, file with the Commission a report furnishing the data described in the subsequent paragraphs of this section, and also comply with the other requirements thereof.

(b) Each such report shall contain the following:

(1) A schedule showing for each class and subclass of plant (whether or not the depreciation rate is proposed to be changed) an appropriate designation therefor, the depreciation rate currently in effect, the proposed rate, and the service-life and net-salvage estimates underlying both the current and proposed depreciation rates;

(2) An additional schedule showing for each class and subclass, as well as the totals for all depreciable plant, (i) the book cost of plant at the most recent date available, (ii) the estimated amount of depreciation accruals determined by applying the currently effective rate to the amount of such book cost, (iii) the estimated amount of depreciation accruals determined by applying the rate proposed to be used to the amount of such book cost, and (iv) the difference between the amounts determined in paragraphs (b)(2) (ii) and (iii) of this section;

(3) A statement giving the reasons for the proposed change in each rate;

(4) A statement describing the method or methods employed in the development of the service-life and salvage estimates underlying each proposed change in a depreciation rate; and

(5) The date as of which the revised rates are proposed to be made effective in the accounts.

(c) Except as specified in paragraphs (c)(1) and (c)(2) of this section, when the change in the depreciation rate proposed for any class or subclass of plant (other than one occasioned solely by a shift in the relative investment in the several subclasses of the class of plant) amounts to twenty percent (20%) or more of the rate currently applied thereto, or when the proposed change will produce an increase or decrease of one percent (1%) or more of the aggregate depreciation charges for all depreciable plant (based on the amounts determined in compliance with paragraph (b)(2) of this section) the carrier shall supplement the data required by paragraph (b) of this section with copies of the underlying studies, including calculations and charts, developed by the carrier to support service-life and net-salvage estimates. If a carrier must submit data of a repetitive nature to comply with this requirement, the carrier need only submit a fully illustrative portion thereof.

(1) A Local Exchange Carrier regulated under price caps, pursuant to §§ 61.41 through 61.49 of this chapter, is

not required to submit the supplemental information described in paragraph (c) introductory text of this section for a specific account if: The carrier's currently prescribed depreciation rate for the specific account is derived from basic factors that fall within the basic factor ranges established for that same account; and the carrier's proposed depreciation rate for the specific account would also be derived from basic factors that fall within the basic factor ranges for the same account.

(2) Interexchange carriers regulated under price caps, pursuant to §§ 61.41 through 61.49 of this chapter, are exempted from submitting the supplemental information as described in paragraph (c) introductory text. They shall instead submit: Generation data, a summary of basic factors underlying proposed rates by account and a short narrative supporting those basic factors, including: Company plans of forecasted retirements and additions; and recent annual retirements, salvage and cost of removal.

(d) Each report shall be filed in duplicate and the original shall be signed by the responsible official to whom correspondence related thereto should be addressed.

(e) Unless otherwise directed or approved by the Commission, the following shall be observed: Proposed changes in depreciation rates shall be filed at least ninety (90) days prior to the last day of the month with respect to which the revised rates are first to be applied in the accounts (e.g., if the new rates are to be first applied in the depreciation accounts for September, they must be filed on or before July 1); and such rates may be made retroactive to a date not prior to the beginning of the year in which the filing is made: *Provided, however,* That in no event shall a carrier for which the Commission has prescribed depreciation rates make any changes in such rates unless the changes are prescribed by the Commission.

(f) Any changes in depreciation rates that are made under the provisions of paragraph (e) of this section shall not be construed as having been approved by the Commission unless the carrier has been specifically so informed.

[28 FR 13214, Dec. 5, 1963, as amended at 30 FR 3223, Mar. 9, 1965; 53 FR 49987, Dec. 13, 1988; 58 FR 58790, Nov. 4, 1993; 61 FR 50246, Sept. 25, 1996]

§ 43.51 Contracts and concessions.

(a) Any communications common carrier that: is engaged in domestic communications and has not been classified as nondominant pursuant to § 61.3 of this chapter or is engaged in foreign communications, and enters into a contract with another carrier, including an operating agreement with a communications entity in a foreign point for the provision of a common carrier service between the United States and that point; must file with the Commission, within thirty (30) days of execution, a copy of each contract, agreement, concession, license, authorization, operating agreement or other arrangement to which it is a party and amendments thereto with respect to the following:

(1) The exchange of services;

(2) Except as provided in paragraph (c) of this section, the interchange or routing of traffic and matters concerning rates, accounting rates, division of tolls, or the basis of settlement of traffic balances;

(3) The interconnection of a private line to the United States' public switched network when such private line is used for foreign communications; and

(4) The rights granted to the carrier by any foreign government for the landing, connection, installation, or operation of cables, land lines, radio stations, offices, or for otherwise engaging in communication operations.

(b) If the agreement referred to in this section is made other than in writing, a certified statement covering all details thereof must be filed by at least one of the parties to the agreement. Each other party to the agreement which is also subject to these provisions may, in lieu of also filing a copy of the agreement, file a certified statement referencing the filed document. The Commission may, at any time and upon reasonable request, require any communication common carrier classified as nondominant, and therefore not

subject to the provisions of this section, to submit the documents referenced in this section.

(c) With respect to contracts coming within the scope of paragraph (a)(2) of this section between subject telephone carriers and connecting carriers, except those contracts related to communications with foreign or overseas points, such documents shall not be filed with the Commission; but each subject telephone carrier shall maintain a copy of such contracts to which it is a party in appropriate files at a central location upon its premises, copies of which shall be readily accessible to Commission staff and members of the public upon reasonable request therefor; and upon request by the Commission, a subject telephone carrier shall promptly forward individual contracts to the Commission.

(d) *International settlements policy.* (1) If a carrier files an operating agreement (whether in the form of a contract, concession, license, etc.) referred to in § 43.51(a) to begin providing switched voice, telex, telegraph, or packet-switched service between the United States and a foreign point and the terms and conditions of such agreement relating to the exchange of services, interchange or routing of traffic and matters concerning rates, accounting rates, division of tolls, or the basis of settlement of traffic balances, are not identical to the equivalent terms and conditions in the operating agreement of another carrier providing the same or similar service between the United States and the same foreign point, the carrier must also file with the Common Carrier Bureau a notification letter or waiver request, as appropriate, under § 64.1001 of this chapter.

(2) If a carrier files an amendment to the operating agreement referred to in § 43.51(a) under which it already provides switched voice, telex, telegraph, or packet-switched service between the United States and a foreign point, and other carriers provide the same or similar service to the same foreign point, and the amendment relates to the exchange of services, interchange or routing of traffic and matters concerning rates, accounting rates, division of tolls, or the basis of settlement of traffic balances, the carrier must also file with the Common Carrier Bureau a notification letter or waiver request, as appropriate, under § 64.1001 of this chapter.

[51 FR 45890, Dec. 23, 1986, as amended at 56 FR 25371, June 4, 1991; 57 FR 647, Jan. 8, 1992; 58 FR 48323, Sept. 15, 1993; 60 FR 52866, Oct. 11, 1995]

§ 43.53 Reports regarding division of international toll communication charges.

(a) Each communication common carrier engaged directly in the transmission or reception of telegraph communications between the continental United States and any foreign country (other than one to which the domestic word-count applies) shall file a report with the Commission within thirty (30) days of the date of any arrangement concerning the division of the total telegraph charges on such communications other than transiting. A carrier first becoming subject to the provisions of this section must, within thirty (30) days thereafter, file with the Commission a report covering any such existing arrangements.

(b) In the event that any change is made which affects data previously filed, a revised page incorporating such change or changes must be filed with the Commission not later than thirty (30) days from the date the change is made, provided, however, that any change in the amount of foreign participation in charges for outbound communications or in the respondent's participation in charges for inbound communications must be filed not later than thirty (30) days from the date the change is agreed upon.

(c) A single copy of each such report must be filed in a format that contains a clear, concise and definite statement of the arrangements.

[51 FR 45891, Dec. 23, 1986, as amended at 52 FR 8453, Mar. 18, 1987]

§ 43.61 Reports of international telecommunications traffic.

(a) Each common carrier engaged in providing international telecommunications service between the area comprising the continental United States, Alaska, Hawaii, and off-shore U.S. points and any country or point outside that area shall file a report with

the Commission not later than July 31 of each year for service actually provided in the preceding calendar year.

(b) The information contained in the reports shall include actual traffic and revenue data for each and every service provided by a common carrier, divided among service billed in the United States, service billed outside the United States, and service transiting the United States.

(c) Each common carrier shall submit a revised report by October 31 identifying and correcting any inaccuracies included in the annual report exceeding five percent of the reported figure.

(d) The information required under this section shall be furnished in conformance with the instructions and reporting requirements prepared under the direction of the Chief, Common Carrier Bureau, prepared and published as a manual, in consultation and coordination with the Chief, International Bureau.

[57 FR 8580, Mar. 11, 1992, as amended at 60 FR 5333, Jan. 27, 1995]

§43.72 [Reserved]

§43.81 Reports of carriers owned by foreign telecommunications entities.

(a) The following carriers are required to file with the Commission an annual revenue and traffic report in triplicate with respect to all common carrier telecommunications services they offer within the United States.

(1) Cable and Wireless Communications, Inc.;

(2) FTCC Communications Inc.; and

(3) Consortium Communications International, Inc.

(b) The Chief, International Bureau has the authority to require that no more than six additional communications carriers owned by foreign telecommunications entities that are classified as dominant for the provision of international telecommunications services originating or terminating in the United States file §43.81 reports.

(c) The report should be captioned—§43.81 report and should provide the following:

(1) Revenues, number of messages and number of minutes for message telephone service traffic originated and/or terminated by the filing carrier;

(2) Revenues, number of messages, and number of minutes for telex traffic originated and/or terminated by the filing carrier;

(3) Revenues, number of messages, and number of minutes for telegraph traffic originated and/or terminated by the filing carrier;

(4) Revenues, number of messages, and number of minutes for any other basic switched services (specified by service) originated and/or terminated by the filing carrier; and

(5) Number of leases and revenues from private line services provided by the filing carrier.

(d) Section 43.81 Reports for:

(1) The calendar year 1988 must be filed on or before August 1, 1989;

(2) The calendar year 1989 must be filed on or before August 1, 1990; and

(3) The calendar year 1990 must be filed on or before August 1, 1991.

(e) These reports shall apply to nine or fewer persons and therefore are not subject to the review of the Office of Management and Budget under the Paperwork Reduction Act.

[54 FR 2130, Jan. 19, 1989, as amended at 60 FR 5333, Jan. 27, 1995]

§43.82 International circuit status reports.

(a) Each facilities-based common carrier engaged in providing international telecommunications service between the area comprising the continental United States, Alaska, Hawaii, and offshore U.S. points and any country or point outside that area shall file a circuit status report with the Chief, International Bureau, not later than March 31 each year showing the status of its circuits used to provide international services as of December 31 of the preceding calendar year.

(b) The information contained in the reports shall include the total number of activated and the total number of idle circuits by the categories of submarine cable, satellite and terrestrial facilities to geographic points outside the United States for the services designated by the Chief, International Bureau.

(c) The information required under this section shall be furnished in conformance with instructions and reporting requirements prepared under the direction of the Chief, International Bureau, prepared and published as a manual.

(d) Authority is hereby delegated to the Chief, International Bureau to prepare instructions and reporting requirements for the filing of the annual international circuit status reports.

[60 FR 51368, Oct. 2, 1995]

PART 51—INTERCONNECTION

Subpart A—General Information

Sec.
51.1 Basis and purpose.
51.3 Applicability to negotiated agreements.
51.5 Terms and definitions.

Subpart B—Telecommunications Carriers

51.100 General duty.

Subpart C—Obligations of All Local Exchange Carriers

51.201 Resale.
51.203 Number portability.
51.205 Dialing parity: General.
51.207 Local dialing parity.
51.209 Toll dialing parity.
51.211 Toll dialing parity implementattion schedule.
51.213 Toll dialing parity implementation plans.
51.215 Dialing parity: Cost recovery.
51.217 Nondiscriminatory access: Telephone numbers, operator services, directory assistance services, and directory listings.
51.219 Access to rights of way.
51.221 Reciprocal compensation.
51.223 Application of additional requirements.

Subpart D—Additional Obligations of Incumbent Local Exchange Carriers

51.301 Duty to negotiate.
51.303 Preexisting agreements.
51.305 Interconnection.
51.307 Duty to provide access on an unbundled basis to network elements.
51.309 Use of unbundled network elements.
51.311 Nondiscriminatory access to unbundled network elements.
51.313 Just, reasonable and nondiscriminatory terms and conditions for the provision of unbundled network elements.
51.315 Combination of unbundled network elements.
51.317 Standards for identifying network elements to be made available.
51.319 Specific unbundling requirements.
51.321 Methods of obtaining interconnection and access to unbundled elements under section 251 of the Act.
51.323 Standards for physical collocation and virtual collocation.
51.325 Notice of network changes: Public notice requirement.
51.327 Notice of network changes: Content of notice.
51.329 Notice of network changes: Methods for providing notice.
51.331 Notice of network changes: Timing of notice.
51.333 Notice of network changes: Short term notice.
51.335 Notice of network changes: Confidential or proprietary information.

Subpart E—Exemptions, Suspensions, and Modifications of Requirements of Section 251 of the Act

51.401 State authority.
51.403 Carriers eligible for suspension or modification under section 251(f)(2) of the Act.
51.405 Burden of proof.

Subpart F—Pricing of Elements

51.501 Scope.
51.503 General pricing standard.
51.505 Forward-looking economic cost.
51.507 General rate structure standard.
51.509 Rate structure standards for specific elements.
51.511 Forward-looking economic cost per unit.
51.513 Proxies for forward-looking economic cost.
51.515 Application of access charges.

Subpart G—Resale

51.601 Scope of resale rules.
51.603 Resale obligation of all local exchange carriers.
51.605 Additional obligations of incumbent local exchange carriers.
51.607 Wholesale pricing standard.
51.609 Determination of avoided retail costs.
51.611 Interim wholesale rates.
51.613 Restrictions on resale.
51.615 Withdrawal of services.
51.617 Assessment of end user common line charge on resellers.

Subpart H—Reciprocal Compensation for Transport and Termination of Local Telecommunications Traffic

51.701 Scope of transport and termination pricing rules.

51.703 Reciprocal compensation obligation of LECs.
51.705 Incumbent LECs' rates for transport and termination.
51.707 Default proxies for incumbent LECs' transport and termination rates.
51.709 Rate structure for transport and termination.
51.711 Symmetrical reciprocal compensation.
51.713 Bill-and-keep arrangements for reciprocal compensation.
51.715 Interim transport and termination pricing.
51.717 Renegotiation of existing non-reciprocal arrangements.

Subpart I—Procedures for Implementation of Section 252 of the Act

51.801 Commission action upon a state commission's failure to act to carry out its responsibility under section 252 of the Act.
51.803 Procedures for Commission notification of a state commission's failure to act.
51.805 The Commission's authority over proceedings and matters.
51.807 Arbitration and mediation of agreements by the Commission pursuant to section 252(e)(5) of the Act.
51.809 Availability of provisions of agreements to other telecommunications carriers under section 252(i) of the Act.

AUTHORITY: Sections 1–5, 7, 201–05, 207–09, 218, 225–27, 251–54, 271, 332, 48 Stat. 1070, as amended, 1077; 47 U.S.C. §§ 151–55, 157, 201–05, 207–09, 218, 225–27, 251–54, 271, 332, unless otherwise noted.

SOURCE: 61 FR 45619, Aug. 29, 1996, unless otherwise noted.

Subpart A—General Information

§ 51.1 Basis and purpose.

(a) *Basis.* These rules are issued pursuant to the Communications Act of 1934, as amended.

(b) *Purpose.* The purpose of these rules is to implement sections 251 and 252 of the Communications Act of 1934, as amended, 47 U.S.C. 251 and 252.

§ 51.3 Applicability to negotiated agreements.

To the extent provided in section 252(e)(2)(A) of the Act, a state commission shall have authority to approve an interconnection agreement adopted by negotiation even if the terms of the agreement do not comply with the requirements of this part.

§ 51.5 Terms and definitions.

Terms used in this part have the following meanings:

Act. The Communications Act of 1934, as amended.

Advanced intelligent network. Advanced intelligent network is a telecommunications network architecture in which call processing, call routing, and network management are provided by means of centralized databases located at points in an incumbent local exchange carrier's network.

Arbitration, final offer. Final offer arbitration is a procedure under which each party submits a final offer concerning the issues subject to arbitration, and the arbitrator selects, without modification, one of the final offers by the parties to the arbitration or portions of both such offers. ''Entire package final offer arbitration,'' is a procedure under which the arbitrator must select, without modification, the entire proposal submitted by one of the parties to the arbitration. ''Issue-by-issue final offer arbitration,'' is a procedure under which the arbitrator must select, without modification, on an issue-by-issue basis, one of the proposals submitted by the parties to the arbitration.

Billing. Billing involves the provision of appropriate usage data by one telecommunications carrier to another to facilitate customer billing with attendant acknowledgements and status reports. It also involves the exchange of information between telecommunications carriers to process claims and adjustments.

Commercial Mobile Radio Service (CMRS). *CMRS* has the same meaning as that term is defined in § 20.3 of this chapter.

Commission. Commission refers to the Federal Communications Commission.

Dialing parity. The term *dialing parity* means that a person that is not an affiliate of a local exchange carrier is able to provide telecommunications services in such a manner that customers have the ability to route automatically, without the use of any access code, their telecommunications to the telecommunications service provider of the customer's designation from among 2 or more telecommunications service providers (including such local exchange carrier).

Directory assistance service. Directory assistance service includes, but is not limited to, making available to customers, upon request, information contained in directory listings.

Directory listings. Directory listings are any information:

(1) Identifying the listed names of subscribers of a telecommunications carrier and such subscriber's telephone numbers, addresses, or primary advertising classifications (as such classifications are assigned at the time of the establishment of such service), or any combination of such listed names, numbers, addresses or classifications; and

(2) That the telecommunications carrier or an affiliate has published, caused to be published, or accepted for publication in any directory format.

Downstream database. A *downstream database* is a database owned and operated by an individual carrier for the purpose of providing number portability in conjunction with other functions and services.

Equipment necessary for interconnection or access to unbundled network elements. For purposes of section 251(c)(2) of the Act, the equipment used to interconnect with an incumbent local exchange carrier's network for the transmission and routing of telephone exchange service, exchange access service, or both. For the purposes of section 251(c)(3) of the Act, the equipment used to gain access to an incumbent local exchange carrier's unbundled network elements for the provision of a telecommunications service.

Incumbent Local Exchange Carrier (Incumbent LEC). With respect to an area, the local exchange carrier that:

(1) On February 8, 1996, provided telephone exchange service in such area; and

(2)(i) On February 8, 1996, was deemed to be a member of the exchange carrier association pursuant to § 69.601(b) of this chapter; or

(ii) Is a person or entity that, on or after February 8, 1996, became a successor or assign of a member described in paragraph (2)(i) of this section.

Information services. The term *information services* means the offering of a capability for generating, acquiring, storing, transforming, processing, retrieving, utilizing, or making available information via telecommunications, and includes electronic publishing, but does not include any use of any such capability for the management, control, or operation of a telecommunications system or the management of a telecommunications service.

Interconnection. Interconnection is the linking of two networks for the mutual exchange of traffic. This term does not include the transport and termination of traffic.

Local Access and Transport Area (LATA). A *Local Access and Transport Area* is a contiguous geographic area—

(1) Established before February 8, 1996 by a Bell operating company such that no exchange area includes points within more than 1 metropolitan statistical area, consolidated metropolitan statistical area, or State, except as expressly permitted under the AT&T Consent Decree; or

(2) Established or modified by a Bell operating company after February 8, 1996 and approved by the Commission.

Local Exchange Carrier (LEC). A *LEC* is any person that is engaged in the provision of telephone exchange service or exchange access. Such term does not include a person insofar as such person is engaged in the provision of a commercial mobile service under section 332(c) of the Act, except to the extent that the Commission finds that such service should be included in the definition of the such term.

Maintenance and repair. Maintenance and repair involves the exchange of information between telecommunications carriers where one initiates a request for maintenance or repair of existing products and services or unbundled network elements or combination thereof from the other with attendant acknowledgements and status reports.

Meet point. A *meet point* is a point of interconnection between two networks, designated by two telecommunications carriers, at which one carrier's responsibility for service begins and the other carrier's responsibility ends.

Meet point interconnection arrangement. A *meet point interconnection arrangement* is an arrangement by which each telecommunications carrier

builds and maintains its network to a meet point.

Network element. A *network element* is a facility or equipment used in the provision of a telecommunications service. Such term also includes, but is not limited to, features, functions, and capabilities that are provided by means of such facility or equipment, including but not limited to, subscriber numbers, databases, signaling systems, and information sufficient for billing and collection or used in the transmission, routing, or other provision of a telecommunications service.

Operator services. Operator services are any automatic or live assistance to a consumer to arrange for billing or completion of a telephone call. Such services include, but are not limited to, busy line verification, emergency interrupt, and operator-assisted directory assistance services.

Physical collocation. Physical collocation is an offering by an incumbent LEC that enables a requesting telecommunications carrier to:

(1) Place its own equipment to be used for interconnection or access to unbundled network elements within or upon an incumbent LEC's premises;

(2) Use such equipment to interconnect with an incumbent LEC's network facilities for the transmission and routing of telephone exchange service, exchange access service, or both, or to gain access to an incumbent LEC's unbundled network elements for the provision of a telecommunications service;

(3) Enter those premises, subject to reasonable terms and conditions, to install, maintain, and repair equipment necessary for interconnection or access to unbundled elements; and

(4) Obtain reasonable amounts of space in an incumbent LEC's premises, as provided in this part, for the equipment necessary for interconnection or access to unbundled elements, allocated on a first-come, first-served basis.

Premises. Premises refers to an incumbent LEC's central offices and serving wire centers, as well as all buildings or similar structures owned or leased by an incumbent LEC that house its network facilities, and all structures that house incumbent LEC facilities on public rights-of-way, including but not limited to vaults containing loop concentrators or similar structures.

Pre-ordering and ordering. Pre-ordering and ordering includes the exchange of information between telecommunications carriers about current or proposed customer products and services or unbundled network elements or some combination thereof.

Provisioning. Provisioning involves the exchange of information between telecommunications carriers where one executes a request for a set of products and services or unbundled network elements or combination thereof from the other with attendant acknowledgements and status reports.

Rural telephone company. A *rural telephone company* is a LEC operating entity to the extent that such entity:

(1) Provides common carrier service to any local exchange carrier study area that does not include either:

(i) Any incorporated place of 10,000 inhabitants or more, or any part thereof, based on the most recently available population statistics of the Bureau of the Census; or

(ii) Any territory, incorporated or unincorporated, included in an urbanized area, as defined by the Bureau of the Census as of August 10, 1993;

(2) Provides telephone exchange service, including exchange access, to fewer than 50,000 access lines;

(3) Provides telephone exchange service to any local exchange carrier study area with fewer than 100,000 access lines; or

(4) Has less than 15 percent of its access lines in communities of more than 50,000 on February 8, 1996.

Service control point. A *service control point* is a computer database in the public switched network which contains information and call processing instructions needed to process and complete a telephone call.

Service creation environment. A *service creation environment* is a computer containing generic call processing software that can be programmed to create new advanced intelligent network call processing services.

Service provider. A *service provider* is a provider of telecommunications services or a provider of information services.

Signal transfer point. A *signal transfer point* is a packet switch that acts as a routing hub for a signaling network and transfers messages between various points in and among signaling networks.

State. The term *state* includes the District of Columbia and the Territories and possessions.

State commission. A *state commission* means the commission, board, or official (by whatever name designated) which under the laws of any State has regulatory jurisdiction with respect to intrastate operations of carriers. As referenced in this part, this term may include the Commission if it assumes the responsibility of the state commission, pursuant to section 252(e)(5) of the Act. This term shall also include any person or persons to whom the state commission has delegated its authority under section 251 and 252 of the Act.

State proceeding. A *state proceeding* is any administrative proceeding in which a state commission may approve or prescribe rates, terms, and conditions including, but not limited to, compulsory arbitration pursuant to section 252(b) of the Act, review of a Bell operating company statement of generally available terms pursuant to section 252(f) of the Act, and a proceeding to determine whether to approve or reject an agreement adopted by arbitration pursuant to section 252(e) of the Act.

Technically feasible. Interconnection, access to unbundled network elements, collocation, and other methods of achieving interconnection or access to unbundled network elements at a point in the network shall be deemed technically feasible absent technical or operational concerns that prevent the fulfillment of a request by a telecommunications carrier for such interconnection, access, or methods. A determination of technical feasibility does not include consideration of economic, accounting, billing, space, or site concerns, except that space and site concerns may be considered in circumstances where there is no possibility of expanding the space available. The fact that an incumbent LEC must modify its facilities or equipment to respond to such request does not determine whether satisfying such request is technically feasible. An incumbent LEC that claims that it cannot satisfy such request because of adverse network reliability impacts must prove to the state commission by clear and convincing evidence that such interconnection, access, or methods would result in specific and significant adverse network reliability impacts.

Telecommunications carrier. A *telecommunications carrier* is any provider of telecommunications services, except that such term does not include aggregators of telecommunications services (as defined in section 226 of the Act). A telecommunications carrier shall be treated as a common carrier under the Act only to the extent that it is engaged in providing telecommunications services, except that the Commission shall determine whether the provision of fixed and mobile satellite service shall be treated as common carriage. This definition includes CMRS providers, interexchange carriers (IXCs) and, to the extent they are acting as telecommunications carriers, companies that provide both telecommunications and information services. Private Mobile Radio Service providers are telecommunications carriers to the extent they provide domestic or international telecommunications for a fee directly to the public.

Telecommunications service. The term *telecommunications service* refers to the offering of telecommunications for a fee directly to the public, or to such classes of users as to be effectively available directly to the public, regardless of the facilities used.

Telephone exchange service. A *telephone exchange service* is:

(1) A service within a telephone exchange, or within a connected system of telephone exchanges within the same exchange area operated to furnish to subscribers intercommunicating service of the character ordinarily furnished by a single exchange, and which is covered by the exchange service charge, or

(2) A comparable service provided through a system of switches, transmission equipment, or other facilities (or combination thereof) by which a subscriber can originate and terminate a telecommunications service.

Telephone toll service. The term *telephone toll service* refers to telephone service between stations in different exchange areas for which there is made a separate charge not included in contracts with subscribers for exchange service.

Unreasonable dialing delay. For the same type of calls, dialing delay is ''unreasonable'' when the dialing delay experienced by the customer of a competing provider is greater than that experienced by a customer of the LEC providing dialing parity, or nondiscriminatory access to operator services or directory assistance.

Virtual collocation. Virtual collocation is an offering by an incumbent LEC that enables a requesting telecommunications carrier to:

(1) Designate or specify equipment to be used for interconnection or access to unbundled network elements to be located within or upon an incumbent LEC's premises, and dedicated to such telecommunications carrier's use;

(2) Use such equipment to interconnect with an incumbent LEC's network facilities for the transmission and routing of telephone exchange service, exchange access service, or both, or for access to an incumbent LEC's unbundled network elements for the provision of a telecommunications service; and

(3) Electronically monitor and control its communications channels terminating in such equipment.

[61 FR 45619, Aug. 29, 1996, as amended at 61 FR 47348, Sept. 6, 1996]

EFFECTIVE DATE NOTE: At 61 FR 47348, Sept. 6, 1996, in §51.5, the definitions of *Dialing parity, Information services, Local Access and Transport Area, Service provider, State, Telecommunications service, Telephone exchange service, Telephone toll service* and *Unreasonable dialing delay* were added, effective Oct. 7, 1996.

Subpart B—Telecommunications Carriers

§51.100 General duty.

(a) Each telecommunications carrier has the duty:

(1) To interconnect directly or indirectly with the facilities and equipment of other telecommunications carriers; and

(2) To not install network features, functions, or capabilities that do not comply with the guidelines and standards as provided in the Commission's rules or section 255 or 256 of the Act.

(b) A telecommunication carrier that has interconnected or gained access under sections 251(a)(1), 251(c)(2), or 251(c)(3) of the Act, may offer information services through the same arrangement, so long as it is offering telecommunications services through the same arrangement as well.

Subpart C—Obligations of All Local Exchange Carriers

§51.201 Resale.

The rules governing resale of services by an incumbent LEC are set forth in subpart G of this part.

§51.203 Number portability.

The rules governing number portability are set forth in part 52, subpart C of this chapter.

§51.205 Dialing parity: General.

A local exchange carrier (LEC) shall provide local and toll dialing parity to competing providers of telephone exchange service or telephone toll service, with no unreasonable dialing delays. Dialing parity shall be provided for all originating telecommunications services that require dialing to route a call.

[61 FR 47349, Sept. 6, 1996]

EFFECTIVE DATE NOTE: At 61 FR 47349, Sept. 6, 1996, §51.205 was added, effective Oct. 7, 1996.

§51.207 Local dialing parity.

A LEC shall permit telephone exchange service customers within a local calling area to dial the same number of digits to make a local telephone call notwithstanding the identity of the customer's or the called party's telecommunications service provider.

[61 FR 47349, Sept. 6, 1996]

EFFECTIVE DATE NOTE: At 61 FR 47349, Sept. 6, 1996, §51.207 was added, effective Oct. 7, 1996.

§ 51.209 Toll dialing parity.

(a) A LEC shall implement throughout each state in which it offers telephone exchange service intraLATA and interLATA toll dialing parity based on LATA boundaries. When a single LATA covers more than one state, the LEC shall use the implementation procedures that each state has approved for the LEC within that state's borders.

(b) A LEC shall implement toll dialing parity through a presubscription process that permits a customer to select a carrier to which all designated calls on a customer's line will be routed automatically. LECs shall allow a customer to presubscribe, at a minimum, to one telecommunications carrier for all interLATA toll calls and to presubscribe to the same or to another telecommunications carrier for all intraLATA toll calls.

(c) A LEC may not assign automatically a customer's intraLATA toll traffic to itself, to its subsidiaries or affiliates, to the customer's presubscribed interLATA or interstate toll carrier, or to any other carrier, except when, in a state that already has implemented intrastate, intraLATA toll dialing parity, the subscriber has selected the same presubscribed carrier for both intraLATA and interLATA toll calls.

(d) Notwithstanding the requirements of paragraphs (a) and (b) of this section, states may require that toll dialing parity be based on state boundaries if it deems that the provision of intrastate and interstate toll dialing parity is procompetitive and otherwise in the public interest.

[61 FR 47349, Sept. 6, 1996]

EFFECTIVE DATE NOTE: At 61 FR 47349, Sept. 6, 1996, § 51.209 was added, effective Oct. 7, 1996.

§ 51.211 Toll dialing parity implementation schedule.

(a) A LEC that does not begin providing in-region, interLATA or in-region, interstate toll services in a state before February 8, 1999, must implement intraLATA and interLATA toll dialing parity throughout that state on February 8, 1999 or an earlier date as the state may determine, consistent with section 271(e)(2)(B) of the Communications Act of 1934, as amended, to be in the public interest.

(b) A Bell Operating Company (BOC) that provides in-region, interLATA toll services in a state before February 8, 1999 shall provide intraLATA toll dialing parity throughout that state coincident with its provision of in-region, interLATA toll services.

(c) A LEC that is not a BOC that begins providing in-region, interLATA or in-region, interstate toll services in a state before August 8, 1997, shall implement intraLATA and interLATA toll dialing parity throughout that state by August 8, 1997. If the LEC is unable to comply with the August 8, 1997 implementation deadline, the LEC must notify the Commission's Common Carrier Bureau by May 8, 1997. In the notification, the LEC must state its justification for noncompliance and must set forth the date by which it proposes to implement intraLATA and interLATA toll dialing parity.

(d) A LEC that is not a BOC that begins providing in-region, interLATA or in-region, interstate toll services in a state on or after August 8, 1997, but before February 8, 1999 shall implement intraLATA and interLATA toll dialing parity throughout that state no later than the date on which it begins providing in-region, interLATA or in-region, interstate toll services.

(e) Notwithstanding the requirements of paragraphs (a) through (d) of this section, a LEC shall implement toll dialing parity under a state order as described below:

(1) If the state issued a dialing parity order by December 19, 1995 requiring a BOC to implement toll dialing parity in advance of the dates established by these rules, the BOC must implement toll dialing parity in accordance with the implementation dates established by the state order.

(2) If the state issued a dialing parity order by August 8, 1996 requiring a LEC that is not a BOC to implement toll dialing parity in advance of the dates established by these rules, the LEC must implement toll dialing parity in accordance with the implementation dates established by the state order.

(f) For LECs that are not Bell Operating Companies, the term *in-region, interLATA toll service*, as used in this

section and §51.213, includes the provision of toll services outside of the LEC's study area.

[61 FR 47349, Sept. 6, 1996]

EFFECTIVE DATE NOTE: At 61 FR 47349, Sept. 6, 1996, §51.211 was added, effective Oct. 7, 1996. The information collection and recordkeeping requirements contained in paragraph (c) of this section are effective Nov. 15, 1996.

§51.213 Toll dialing parity implementation plans.

(a) A LEC must file a plan for providing intraLATA toll dialing parity throughout each state in which it offers telephone exchange service. A LEC cannot offer intraLATA toll dialing parity within a state until the implementation plan has been approved by the appropriate state commission or the Commission.

(b) A LEC's implementation plan must include:

(1) A proposal that explains how the LEC will offer intraLATA toll dialing parity for each exchange that the LEC operates in the state, in accordance with the provisions of this section, and a proposed time schedule for implementation; and

(2) A proposal for timely notification of its subscribers and the methods it proposes to use to enable subscribers to affirmatively select an intraLATA toll service provider.

(3) A LEC that is not a BOC also shall identify the LATA with which it will associate for the purposes of providing intraLATA and interLATA toll dialing parity under this subpart.

(c) A LEC must file its implementation plan with the state commission for each state in which the LEC provides telephone exchange service, except that if a LEC determines that a state commission has elected not to review the plan or will not complete its review in sufficient time for the LEC to meet the toll dialing parity implementation deadlines in §51.211, the LEC must file its plan with the Commission:

(1) No later than 180 days before the date on which the LEC will begin providing toll dialing parity in the state, or no later than 180 days before February 8, 1999, whichever occurs first; or

(2) For LECs that begin providing in-region, interLATA or in-region, interstate toll service (*see* §51.211(f)) before August 8, 1997, no later than December 5, 1996.

(d) The Commission will release a public notice of any LEC implementation plan that is filed with the Commission under paragraph (c) of this section.

(1) The LEC's plan will be deemed approved on the fifteenth day following release of the Commission's public notice unless, no later than the fourteenth day following the release of the Commission's public notice; either

(i) The Common Carrier Bureau notifies the LEC that its plan will not be deemed approved on the fifteenth day; or

(ii) An opposition to the plan is filed with the Commission and served on the LEC that filed the plan. Such an opposition must state specific reasons why the LEC's plan does not serve the public interest.

(2) If one or more oppositions are filed, the LEC that filed the plan will have seven additional days (*i.e.,* until no later than the twenty-first day following the release of the Commission's public notice) within which to file a reply to the opposition(s) and serve it on all parties that filed an opposition. The response shall:

(i) Include information responsive to the allegations and concerns identified by the opposing party; and

(ii) Identify possible revisions to the plan that will address the opposing party's concerns.

(3) If a LEC's plan is opposed under paragraph (d)(1)(ii) of this section, the Common Carrier Bureau will act on the plan within ninety days of the date on which the Commission released its public notice. In the event the Bureau fails to act within ninety days, the plan will not go into effect pending Bureau action. If the plan is not opposed, but it did not go into effect on the fifteenth day following the release of the Commission's public notice (*see* paragraph (d)(1)(i) of this section), and the Common Carrier Bureau fails to act on the plan within ninety days of the date on which the Commission released its public notice, the plan will be deemed approved without further Commission action on the ninety-first day after the

date on which the Commission released its public notice of the plan's filing.

[61 FR 47349, Sept. 6, 1996]

EFFECTIVE DATE NOTE: At 61 FR 47349, Sept. 6, 1996, § 51.213 was added. The information collection and recordkeeping requirements contained in this section are effective Nov. 15, 1996.

§ 51.215 Dialing parity: Cost recovery.

(a) A LEC may recover the incremental costs necessary for the implementation of toll dialing parity. The LEC must recover such costs from all providers of telephone exchange service and telephone toll service in the area served by the LEC, including that LEC. The LEC shall use a cost recovery mechanism established by the state.

(b) Any cost recovery mechanism for the provision of toll dialing parity pursuant to this section that a state adopts must not:

(1) Give one service provider an appreciable cost advantage over another service provider, when competing for a specific subscriber (*i.e.,* the recovery mechanism may not have a disparate effect on the incremental costs of competing service providers seeking to serve the same customer); or

(2) Have a disparate effect on the ability of competing service providers to earn a normal return on their investment.

[61 FR 47350, Sept. 6, 1996]

EFFECTIVE DATE NOTE: At 61 FR 47350, Sept. 6, 1996, § 51.215 was added, effective Oct. 7, 1996.

§ 51.217 Nondiscriminatory access: Telephone numbers, operator services, directory assistance services, and directory listings.

(a) *Definitions.* As used in this section, the following definitions apply:

(1) *Competing provider.* A ''competing provider'' is a provider of telephone exchange or telephone toll services that seeks nondiscriminatory access from a local exchange carrier (LEC) in that LEC's service area.

(2) *Nondiscriminatory access.* ''Nondiscriminatory access'' refers to access to telephone numbers, operator services, directory assistance and directory listings that is at least equal to the access that the providing local exchange carrier (LEC) itself receives. Nondiscriminatory access includes, but is not limited to:

(i) Nondiscrimination between and among carriers in the rates, terms, and conditions of the access provided; and

(ii) The ability of the competing provider to obtain access that is at least equal in quality to that of the providing LEC.

(3) *Providing local exchange carrier* (LEC). A ''providing local exchange carrier'' is a local exchange carrier (LEC) that is required to permit nondiscriminatory access to a competing provider.

(b) *General rule.* A local exchange carrier (LEC) that provides operator services, directory assistance services or directory listings to its customers, or provides telephone numbers, shall permit competing providers of telephone exchange service or telephone toll service to have nondiscriminatory access to that service or feature, with no unreasonable dialing delays.

(c) *Specific requirements.* A LEC subject to paragraph (b) of this section must also comply with the following requirements:

(1) *Telephone numbers.* A LEC shall permit competing providers to have access to telephone numbers that is identical to the access that the LEC provides to itself.

(2) *Operator services.* A LEC must permit telephone service customers to connect to the operator services offered by that customer's chosen local service provider by dialing ''0,'' or ''0'' plus the desired telephone number, regardless of the identity of the customer's local telephone service provider.

(3) *Directory assistance services and directory listings.*—(i) *Access to directory assistance.* A LEC shall permit competing providers to have access to its directory assistance services so that any customer of a competing provider can obtain directory listings, except as provided in paragraph (c)(3)(iii) of this section, on a nondiscriminatory basis, notwithstanding the identity of the customer's local service provider, or the identity of the provider for the customer whose listing is requested.

(ii) *Access to directory listings.* A LEC shall provide directory listings to competing providers in readily accessible magnetic tape or electronic formats in a timely fashion upon request. A LEC also must permit competing providers to have access to and read the information in the LEC's directory assistance databases.

(iii) *Unlisted numbers.* A LEC shall not provide access to unlisted telephone numbers, or other information that its customer has asked the LEC not to make available. The LEC shall ensure that access is permitted only to the same directory information that is available to its own directory assistance customers.

(iv) *Adjuncts to services.* Operator services and directory assistance services must be made available to competing providers in their entirety, including access to any adjunct features (*e.g.*, rating tables or customer information databases) necessary to allow competing providers full use of these services.

(d) *Branding of operator services and directory assistance services.* The refusal of a providing local exchange carrier (LEC) to comply with the reasonable request of a competing provider that the providing LEC rebrand its operator services and directory assistance, or remove its brand from such services, creates a presumption that the providing LEC is unlawfully restricting access to its operator services and directory assistance. The providing LEC can rebut this presumption by demonstrating that it lacks the capability to comply with the competing provider's request.

(e) *Disputes.*—(1) *Disputes involving nondiscriminatory access.* In disputes involving nondiscriminatory access to operator services, directory assistance services, or directory listings, a providing LEC shall bear the burden of demonstrating with specificity:

(i) That it is permitting nondiscriminatory access, and

(ii) That any disparity in access is not caused by factors within its control. ''Factors within its control'' include, but are not limited to, physical facilities, staffing, the ordering of supplies or equipment, and maintenance.

(2) *Disputes involving unreasonable dialing delay.* In disputes between providing local exchange carriers (LECs) and competing providers involving unreasonable dialing delay in the provision of access to operator services and directory assistance, the burden of proof is on the providing LEC to demonstrate with specificity that it is processing the calls of the competing provider's customers on terms equal to that of similar calls from the providing LEC's own customers.

[61 FR 47350, Sept. 6, 1996]

EFFECTIVE DATE NOTE: At 61 FR 47350, Sept. 6, 1996, § 51.217 was added. The information collection and recordkeeping requirements contained in this section are effective Nov. 15, 1996.

§ 51.219 Access to rights of way.

The rules governing access to rights of way are set forth in part 1, subpart J of this chapter.

§ 51.221 Reciprocal compensation.

The rules governing reciprocal compensation are set forth in subpart H of this part.

§ 51.223 Application of additional requirements.

(a) A state may not impose the obligations set forth in section 251(c) of the Act on a LEC that is not classified as an incumbent LEC as defined in section 251(h)(1) of the Act, unless the Commission issues an order declaring that such LECs or classes or categories of LECs should be treated as incumbent LECs.

(b) A state commission, or any other interested party, may request that the Commission issue an order declaring that a particular LEC be treated as an incumbent LEC, or that a class or category of LECs be treated as incumbent LECs, pursuant to section 251(h)(2) of the Act.

Subpart D—Additional Obligations of Incumbent Local Exchange Carriers

§ 51.301 Duty to negotiate.

(a) An incumbent LEC shall negotiate in good faith the terms and conditions of agreements to fulfill the duties established by sections 251(b) and (c) of the Act.

(b) A requesting telecommunications carrier shall negotiate in good faith

the terms and conditions of agreements described in paragraph (a) of this section.

(c) If proven to the Commission, an appropriate state commission, or a court of competent jurisdiction, the following actions or practices, among others, violate the duty to negotiate in good faith:

(1) Demanding that another party sign a nondisclosure agreement that precludes such party from providing information requested by the Commission, or a state commission, or in support of a request for arbitration under section 252(b)(2)(B) of the Act;

(2) Demanding that a requesting telecommunications carrier attest that an agreement complies with all provisions of the Act, federal regulations, or state law;

(3) Refusing to include in an arbitrated or negotiated agreement a provision that permits the agreement to be amended in the future to take into account changes in Commission or state rules;

(4) Conditioning negotiation on a requesting telecommunications carrier first obtaining state certifications;

(5) Intentionally misleading or coercing another party into reaching an agreement that it would not otherwise have made;

(6) Intentionally obstructing or delaying negotiations or resolutions of disputes;

(7) Refusing throughout the negotiation process to designate a representative with authority to make binding representations, if such refusal significantly delays resolution of issues; and

(8) Refusing to provide information necessary to reach agreement. Such refusal includes, but is not limited to:

(i) Refusal by an incumbent LEC to furnish information about its network that a requesting telecommunications carrier reasonably requires to identify the network elements that it needs in order to serve a particular customer; and

(ii) Refusal by a requesting telecommunications carrier to furnish cost data that would be relevant to setting rates if the parties were in arbitration.

§ 51.303 Preexisting agreements.

(a) All interconnection agreements between an incumbent LEC and a telecommunications carrier, including those negotiated before February 8, 1996, shall be submitted by the parties to the appropriate state commission for approval pursuant to section 252(e) of the Act.

(b) Interconnection agreements negotiated before February 8, 1996, between Class A carriers, as defined by § 32.11(a)(1) of this chapter, shall be filed by the parties with the appropriate state commission no later than June 30, 1997, or such earlier date as the state commission may require.

(c) If a state commission approves a preexisting agreement, it shall be made available to other parties in accordance with section 252(i) of the Act and § 51.809 of this part. A state commission may reject a preexisting agreement on the grounds that it is inconsistent with the public interest, or for other reasons set forth in section 252(e)(2)(A) of the Act.

§ 51.305 Interconnection.

(a) An incumbent LEC shall provide, for the facilities and equipment of any requesting telecommunications carrier, interconnection with the incumbent LEC's network:

(1) For the transmission and routing of telephone exchange traffic, exchange access traffic, or both;

(2) At any technically feasible point within the incumbent LEC's network including, at a minimum:

(i) The line-side of a local switch;

(ii) The trunk-side of a local switch;

(iii) The trunk interconnection points for a tandem switch;

(iv) Central office cross-connect points;

(v) Out-of-band signaling transfer points necessary to exchange traffic at these points and access call-related databases; and

(vi) The points of access to unbundled network elements as described in § 51.319;

(3) That is at a level of quality that is equal to that which the incumbent LEC provides itself, a subsidiary, an affiliate, or any other party, except as provided in paragraph (4) of this section. At a minimum, this requires an

incumbent LEC to design interconnection facilities to meet the same technical criteria and service standards that are used within the incumbent LEC's network. This obligation is not limited to a consideration of service quality as perceived by end users, and includes, but is not limited to, service quality as perceived by the requesting telecommunications carrier;

(4) That, if so requested by a telecommunications carrier and to the extent technically feasible, is superior in quality to that provided by the incumbent LEC to itself or to any subsidiary, affiliate, or any other party to which the incumbent LEC provides interconnection. Nothing in this section prohibits an incumbent LEC from providing interconnection that is lesser in quality at the sole request of the requesting telecommunications carrier; and

(5) On terms and conditions that are just, reasonable, and nondiscriminatory in accordance with the terms and conditions of any agreement, the requirements of sections 251 and 252 of the Act, and the Commission's rules including, but not limited to, offering such terms and conditions equally to all requesting telecommunications carriers, and offering such terms and conditions that are no less favorable than the terms and conditions upon which the incumbent LEC provides such interconnection to itself. This includes, but is not limited to, the time within which the incumbent LEC provides such interconnection.

(b) A carrier that requests interconnection solely for the purpose of originating or terminating its interexchange traffic on an incumbent LEC's network and not for the purpose of providing to others telephone exchange service, exchange access service, or both, is not entitled to receive interconnection pursuant to section 251(c)(2) of the Act.

(c) Previous successful interconnection at a particular point in a network, using particular facilities, constitutes substantial evidence that interconnection is technically feasible at that point, or at substantially similar points, in networks employing substantially similar facilities. Adherence to the same interface or protocol standards shall constitute evidence of the substantial similarity of network facilities.

(d) Previous successful interconnection at a particular point in a network at a particular level of quality constitutes substantial evidence that interconnection is technically feasible at that point, or at substantially similar points, at that level of quality.

(e) An incumbent LEC that denies a request for interconnection at a particular point must prove to the state commission that interconnection at that point is not technically feasible.

(f) If technically feasible, an incumbent LEC shall provide two-way trunking upon request.

(g) An incumbent LEC shall provide to a requesting telecommunications carrier technical information about the incumbent LEC's network facilities sufficient to allow the requesting carrier to achieve interconnection consistent with the requirements of this section.

[61 FR 45619, Aug. 29, 1996, as amended at 61 FR 47351, Sept. 6, 1996]

EFFECTIVE DATE NOTE: At 61 FR 47351, Sept. 6, 1996, in §51.305, paragraph (g) was added. The information collection and recordkeeping requirements contained in paragraph (g) are effective Nov. 15, 1996.

§51.307 Duty to provide access on an unbundled basis to network elements.

(a) An incumbent LEC shall provide, to a requesting telecommunications carrier for the provision of a telecommunications service, nondiscriminatory access to network elements on an unbundled basis at any technically feasible point on terms and conditions that are just, reasonable, and nondiscriminatory in accordance with the terms and conditions of any agreement, the requirements of sections 251 and 252 of the Act, and the Commission's rules.

(b) The duty to provide access to unbundled network elements pursuant to section 251(c)(3) of the Act includes a duty to provide a connection to an unbundled network element independent of any duty to provide interconnection pursuant to this part and section 251(c)(2) of the Act.

(c) An incumbent LEC shall provide a requesting telecommunications carrier access to an unbundled network element, along with all of the unbundled network element's features, functions, and capabilities, in a manner that allows the requesting telecommunications carrier to provide any telecommunications service that can be offered by means of that network element.

(d) An incumbent LEC shall provide a requesting telecommunications carrier access to the facility or functionality of a requested network element separate from access to the facility or functionality of other network elements, for a separate charge.

(e) An incumbent LEC shall provide to a requesting telecommunications carrier technical information about the incumbent LEC's network facilities sufficient to allow the requesting carrier to achieve access to unbundled network elements consistent with the requirements of this section.

[61 FR 45619, Aug. 29, 1996, as amended at 61 FR 47351, Sept. 6, 1996]

EFFECTIVE DATE NOTE: At 61 FR 47351, Sept. 6, 1996, in §51.307, paragraph (e) was added. The information collection and recordkeeping requirements contained in paragraph (e) are effective Nov. 15, 1996.

§ 51.309 Use of unbundled network elements.

(a) An incumbent LEC shall not impose limitations, restrictions, or requirements on requests for, or the use of, unbundled network elements that would impair the ability of a requesting telecommunications carrier to offer a telecommunications service in the manner the requesting telecommunications carrier intends.

(b) A telecommunications carrier purchasing access to an unbundled network element may use such network element to provide exchange access services to itself in order to provide interexchange services to subscribers.

(c) A telecommunications carrier purchasing access to an unbundled network facility is entitled to exclusive use of that facility for a period of time, or when purchasing access to a feature, function, or capability of a facility, a telecommunications carrier is entitled to use of that feature, function, or capability for a period of time. A telecommunications carrier's purchase of access to an unbundled network element does not relieve the incumbent LEC of the duty to maintain, repair, or replace the unbundled network element.

§ 51.311 Nondiscriminatory access to unbundled network elements.

(a) The quality of an unbundled network element, as well as the quality of the access to the unbundled network element, that an incumbent LEC provides to a requesting telecommunications carrier shall be the same for all telecommunications carriers requesting access to that network element, except as provided in paragraph (c) of this section.

(b) Except as provided in paragraph (c) of this section, to the extent technically feasible, the quality of an unbundled network element, as well as the quality of the access to such unbundled network element, that an incumbent LEC provides to a requesting telecommunications carrier shall be at least equal in quality to that which the incumbent LEC provides to itself. If an incumbent LEC fails to meet this requirement, the incumbent LEC must prove to the state commission that it is not technically feasible to provide the requested unbundled network element, or to provide access to the requested unbundled network element, at a level of quality that is equal to that which the incumbent LEC provides to itself.

(c) To the extent technically feasible, the quality of an unbundled network element, as well as the quality of the access to such unbundled network element, that an incumbent LEC provides to a requesting telecommunications carrier shall, upon request, be superior in quality to that which the incumbent LEC provides to itself. If an incumbent LEC fails to meet this requirement, the incumbent LEC must prove to the state commission that it is not technically feasible to provide the requested unbundled network element or access to such unbundled network element at the requested level of quality

that is superior to that which the incumbent LEC provides to itself. Nothing in this section prohibits an incumbent LEC from providing interconnection that is lesser in quality at the sole request of the requesting telecommunications carrier.

(d) Previous successful access to an unbundled element at a particular point in a network, using particular facilities, is substantial evidence that access is technically feasible at that point, or at substantially similar points, in networks employing substantially similar facilities. Adherence to the same interface or protocol standards shall constitute evidence of the substantial similarity of network facilities.

(e) Previous successful provision of access to an unbundled element at a particular point in a network at a particular level of quality is substantial evidence that access is technically feasible at that point, or at substantially similar points, at that level of quality.

§51.313 Just, reasonable and nondiscriminatory terms and conditions for the provision of unbundled network elements.

(a) The terms and conditions pursuant to which an incumbent LEC provides access to unbundled network elements shall be offered equally to all requesting telecommunications carriers.

(b) Where applicable, the terms and conditions pursuant to which an incumbent LEC offers to provide access to unbundled network elements, including but not limited to, the time within which the incumbent LEC provisions such access to unbundled network elements, shall, at a minimum, be no less favorable to the requesting carrier than the terms and conditions under which the incumbent LEC provides such elements to itself.

(c) An incumbent LEC must provide a carrier purchasing access to unbundled network elements with the pre-ordering, ordering, provisioning, maintenance and repair, and billing functions of the incumbent LEC's operations support systems.

§51.315 Combination of unbundled network elements.

(a) An incumbent LEC shall provide unbundled network elements in a manner that allows requesting telecommunications carriers to combine such network elements in order to provide a telecommunications service.

(b) Except upon request, an incumbent LEC shall not separate requested network elements that the incumbent LEC currently combines.

(c) Upon request, an incumbent LEC shall perform the functions necessary to combine unbundled network elements in any manner, even if those elements are not ordinarily combined in the incumbent LEC's network, provided that such combination is:

(1) Technically feasible; and

(2) Would not impair the ability of other carriers to obtain access to unbundled network elements or to interconnect with the incumbent LEC's network.

(d) Upon request, an incumbent LEC shall perform the functions necessary to combine unbundled network elements with elements possessed by the requesting telecommunications carrier in any technically feasible manner.

(e) An incumbent LEC that denies a request to combine elements pursuant to paragraph (c)(1) or paragraph (d) of this section must prove to the state commission that the requested combination is not technically feasible.

(f) An incumbent LEC that denies a request to combine elements pursuant to paragraph (c)(2) of this section must prove to the state commission that the requested combination would impair the ability of other carriers to obtain access to unbundled network elements or to interconnect with the incumbent LEC's network.

§51.317 Standards for identifying network elements to be made available.

(a) In determining what network elements should be made available for purposes of section 251(c)(3) of the Act beyond those identified in §51.319, a state commission shall first determine whether it is technically feasible for the incumbent LEC to provide access

to a network element on an unbundled basis.

(b) If the state commission determines that it is technically feasible for the incumbent LEC to provide access to the network element on an unbundled basis, the state commission may decline to require unbundling of the network element only if:

(1) The state commission concludes that:

(i) The network element is proprietary, or contains proprietary information that will be revealed if the network element is provided on an unbundled basis; and

(ii) A requesting telecommunications carrier could offer the same proposed telecommunications service through the use of other, nonproprietary unbundled network elements within the incumbent LEC's network; or

(2) The state commission concludes that the failure of the incumbent LEC to provide access to the network element would not decrease the quality of, and would not increase the financial or administrative cost of, the telecommunications service a requesting telecommunications carrier seeks to offer, compared with providing that service over other unbundled network elements in the incumbent LEC's network.

§ 51.319 Specific unbundling requirements.

An incumbent LEC shall provide nondiscriminatory access in accordance with § 51.311 and section 251(c)(3) of the Act to the following network elements on an unbundled basis to any requesting telecommunications carrier for the provision of a telecommunications service:

(a) *Local Loop*. The local loop network element is defined as a transmission facility between a distribution frame (or its equivalent) in an incumbent LEC central office and an end user customer premises.

(b) *Network Interface Device.* (1) The network interface device network element is defined as a cross-connect device used to connect loop facilities to inside wiring.

(2) An incumbent LEC shall permit a requesting telecommunications carrier to connect its own local loops to the inside wiring of premises through the incumbent LEC's network interface device. The requesting telecommunications carrier shall establish this connection through an adjoining network interface device deployed by such telecommunications carrier.

(c) *Switching Capability*. (1) Local Switching Capability.

(i) The local switching capability network element is defined as:

(A) Line-side facilities, which include, but are not limited to, the connection between a loop termination at a main distribution frame and a switch line card;

(B) Trunk-side facilities, which include, but are not limited to, the connection between trunk termination at a trunk-side cross-connect panel and a switch trunk card; and

(C) All features, functions, and capabilities of the switch, which include, but are not limited to:

(*1*) The basic switching function of connecting lines to lines, lines to trunks, trunks to lines, and trunks to trunks, as well as the same basic capabilities made available to the incumbent LEC's customers, such as a telephone number, white page listing, and dial tone; and

(*2*) All other features that the switch is capable of providing, including but not limited to custom calling, custom local area signaling service features, and Centrex, as well as any technically feasible customized routing functions provided by the switch.

(ii) An incumbent LEC shall transfer a customer's local service to a competing carrier within a time period no greater than the interval within which the incumbent LEC currently transfers end users between interexchange carriers, if such transfer requires only a change in the incumbent LEC's software;

(2) Tandem Switching Capability. The tandem switching capability network element is defined as:

(i) Trunk-connect facilities, including but not limited to the connection between trunk termination at a cross-connect panel and a switch trunk card;

(ii) The basic switching function of connecting trunks to trunks; and

(iii) The functions that are centralized in tandem switches (as distinguished from separate end-office switches), including but not limited to call recording, the routing of calls to operator services, and signaling conversion features.

(d) *Interoffice Transmission Facilities.* (1) Interoffice transmission facilities are defined as incumbent LEC transmission facilities dedicated to a particular customer or carrier, or shared by more than one customer or carrier, that provide telecommunications between wire centers owned by incumbent LECs or requesting telecommunications carriers, or between switches owned by incumbent LECs or requesting telecommunications carriers.

(2) The incumbent LEC shall:

(i) Provide a requesting telecommunications carrier exclusive use of interoffice transmission facilities dedicated to a particular customer or carrier, or use of the features, functions, and capabilities of interoffice transmission facilities shared by more than one customer or carrier;

(ii) Provide all technically feasible transmission facilities, features, functions, and capabilities that the requesting telecommunications carrier could use to provide telecommunications services;

(iii) Permit, to the extent technically feasible, a requesting telecommunications carrier to connect such interoffice facilities to equipment designated by the requesting telecommunications carrier, including, but not limited to, the requesting telecommunications carrier's collocated facilities; and

(iv) Permit, to the extent technically feasible, a requesting telecommunications carrier to obtain the functionality provided by the incumbent LEC's digital cross-connect systems in the same manner that the incumbent LEC provides such functionality to interexchange carriers.

(e) *Signaling Networks and Call-Related Databases.* (1) Signaling Networks.

(i) Signaling networks include, but are not limited to, signaling links and signaling transfer points.

(ii) When a requesting telecommunications carrier purchases unbundled switching capability from an incumbent LEC, the incumbent LEC shall provide access to its signaling network from that switch in the same manner in which it obtains such access itself.

(iii) An incumbent LEC shall provide a requesting telecommunications carrier with its own switching facilities access to the incumbent LEC's signaling network for each of the requesting telecommunications carrier's switches. This connection shall be made in the same manner as an incumbent LEC connects one of its own switches to a signal transfer point.

(iv) An incumbent LEC is not required to unbundle those signaling links that connect service control points to switching transfer points or to permit a requesting telecommunications carrier to link its own signal transfer points directly to the incumbent LEC's switch or call-related databases;

(2) Call-Related Databases.

(i) Call-related databases are defined as databases, other than operations support systems, that are used in signaling networks for billing and collection or the transmission, routing, or other provision of a telecommunications service.

(ii) For purposes of switch query and database response through a signaling network, an incumbent LEC shall provide access to its call-related databases, including, but not limited to, the Line Information Database, Toll Free Calling database, downstream number portability databases, and Advanced Intelligent Network databases, by means of physical access at the signaling transfer point linked to the unbundled database.

(iii) An incumbent LEC shall allow a requesting telecommunications carrier that has purchased an incumbent LEC's local switching capability to use the incumbent LEC's service control point element in the same manner, and via the same signaling links, as the incumbent LEC itself.

(iv) An incumbent LEC shall allow a requesting telecommunications carrier that has deployed its own switch, and has linked that switch to an incumbent LEC's signaling system, to gain access to the incumbent LEC's service control

point in a manner that allows the requesting carrier to provide any call-related, database-supported services to customers served by the requesting telecommunications carrier's switch.

(v) A state commission shall consider whether mechanisms mediating access to an incumbent LEC's Advanced Intelligent Network service control points are necessary, and if so, whether they will adequately safeguard against intentional or unintentional misuse of the incumbent LEC's Advanced Intelligent Network facilities.

(vi) An incumbent LEC shall provide a requesting telecommunications carrier with access to call-related databases in a manner that complies with section 222 of the Act;

(3) Service Management Systems.

(i) A service management system is defined as a computer database or system not part of the public switched network that, among other things:

(A) Interconnects to the service control point and sends to that service control point the information and call processing instructions needed for a network switch to process and complete a telephone call; and

(B) Provides telecommunications carriers with the capability of entering and storing data regarding the processing and completing of a telephone call.

(ii) An incumbent LEC shall provide a requesting telecommunications carrier with the information necessary to enter correctly, or format for entry, the information relevant for input into the particular incumbent LEC service management system.

(iii) An incumbent LEC shall provide a requesting telecommunications carrier the same access to design, create, test, and deploy Advanced Intelligent Network-based services at the service management system, through a service creation environment, that the incumbent LEC provides to itself.

(iv) A state commission shall consider whether mechanisms mediating access to Advanced Intelligent Network service management systems and service creation environments are necessary, and if so, whether they will adequately safeguard against intentional or unintentional misuse of the incumbent LEC's Advanced Intelligent Network facilities.

(v) An incumbent LEC shall provide a requesting telecommunications carrier access to service management systems in a manner that complies with section 222 of the Act.

(f) *Operations Support Systems Functions.* (1) Operations support systems functions consist of pre-ordering, ordering, provisioning, maintenance and repair, and billing functions supported by an incumbent LEC's databases and information.

(2) An incumbent LEC that does not currently comply with this requirement shall do so as expeditiously as possible, but, in any event, no later than January 1, 1997.

(g) *Operator Services and Directory Assistance.* An incumbent LEC shall provide access to operator service and directory assistance facilities where technically feasible.

§ 51.321 Methods of obtaining interconnection and access to unbundled elements under section 251 of the Act.

(a) Except as provided in paragraph (e) of this section, an incumbent LEC shall provide, on terms and conditions that are just, reasonable, and nondiscriminatory in accordance with the requirements of this part, any technically feasible method of obtaining interconnection or access to unbundled network elements at a particular point upon a request by a telecommunications carrier.

(b) Technically feasible methods of obtaining interconnection or access to unbundled network elements include, but are not limited to:

(1) Physical collocation and virtual collocation at the premises of an incumbent LEC; and

(2) Meet point interconnection arrangements.

(c) A previously successful method of obtaining interconnection or access to unbundled network elements at a particular premises or point on an incumbent LEC's network is substantial evidence that such method is technically feasible in the case of substantially similar network premises or points.

(d) An incumbent LEC that denies a request for a particular method of obtaining interconnection or access to

unbundled network elements on the incumbent LEC's network must prove to the state commission that the requested method of obtaining interconnection or access to unbundled network elements at that point is not technically feasible.

(e) An incumbent LEC shall not be required to provide for physical collocation of equipment necessary for interconnection or access to unbundled network elements at the incumbent LEC's premises if it demonstrates to the state commission that physical collocation is not practical for technical reasons or because of space limitations. In such cases, the incumbent LEC shall be required to provide virtual collocation, except at points where the incumbent LEC proves to the state commission that virtual collocation is not technically feasible. If virtual collocation is not technically feasible, the incumbent LEC shall provide other methods of interconnection and access to unbundled network elements to the extent technically feasible.

(f) An incumbent LEC shall submit to the state commission detailed floor plans or diagrams of any premises where the incumbent LEC claims that physical collocation is not practical because of space limitations.

(g) An incumbent LEC that is classified as a Class A company under § 32.11 of this chapter and that is not a National Exchange Carrier Association interstate tariff participant as provided in part 69, subpart G, shall continue to provide expanded interconnection service pursuant to interstate tariff in accordance with §§ 64.1401, 64.1402, 69.121 of this chapter, and the Commission's other requirements.

§ 51.323 Standards for physical collocation and virtual collocation.

(a) An incumbent LEC shall provide physical collocation and virtual collocation to requesting telecommunications carriers.

(b) An incumbent LEC shall permit the collocation of any type of equipment used for interconnection or access to unbundled network elements. Whenever an incumbent LEC objects to collocation of equipment by a requesting telecommunications carrier for purposes within the scope of section 251(c)(6) of the Act, the incumbent LEC shall prove to the state commission that the equipment will not be actually used by the telecommunications carrier for the purpose of obtaining interconnection or access to unbundled network elements. Equipment used for interconnection and access to unbundled network elements includes, but is not limited to:

(1) Transmission equipment including, but not limited to, optical terminating equipment and multiplexers; and

(2) Equipment being collocated to terminate basic transmission facilities pursuant to §§ 64.1401 and 64.1402 of this chapter as of August 1, 1996.

(c) Nothing in this section requires an incumbent LEC to permit collocation of switching equipment or equipment used to provide enhanced services.

(d) When an incumbent LEC provides physical collocation, virtual collocation, or both, the incumbent LEC shall:

(1) Provide an interconnection point or points, physically accessible by both the incumbent LEC and the collocating telecommunications carrier, at which the fiber optic cable carrying an interconnector's circuits can enter the incumbent LEC's premises, provided that the incumbent LEC shall designate interconnection points as close as reasonably possible to its premises;

(2) Provide at least two such interconnection points at each incumbent LEC premises at which there are at least two entry points for the incumbent LEC's cable facilities, and at which space is available for new facilities in at least two of those entry points;

(3) Permit interconnection of copper or coaxial cable if such interconnection is first approved by the state commission; and

(4) Permit physical collocation of microwave transmission facilities except where such collocation is not practical for technical reasons or because of space limitations, in which case virtual collocation of such facilities is required where technically feasible.

(e) When providing virtual collocation, an incumbent LEC shall, at a minimum, install, maintain, and repair

collocated equipment identified in paragraph (b) of this section within the same time periods and with failure rates that are no greater than those that apply to the performance of similar functions for comparable equipment of the incumbent LEC itself.

(f) An incumbent LEC shall allocate space for the collocation of the equipment identified in paragraph (b) of this section in accordance with the following requirements:

(1) An incumbent LEC shall make space available within or on its premises to requesting telecommunications carriers on a first-come, first-served basis, provided, however, that the incumbent LEC shall not be required to lease or construct additional space to provide for physical collocation when existing space has been exhausted;

(2) To the extent possible, an incumbent LEC shall make contiguous space available to requesting telecommunications carriers that seek to expand their existing collocation space;

(3) When planning renovations of existing facilities or constructing or leasing new facilities, an incumbent LEC shall take into account projected demand for collocation of equipment;

(4) An incumbent LEC may retain a limited amount of floor space for its own specific future uses, provided, however, that the incumbent LEC may not reserve space for future use on terms more favorable than those that apply to other telecommunications carriers seeking to reserve collocation space for their own future use;

(5) An incumbent LEC shall relinquish any space held for future use before denying a request for virtual collocation on the grounds of space limitations, unless the incumbent LEC proves to the state commission that virtual collocation at that point is not technically feasible; and

(6) An incumbent LEC may impose reasonable restrictions on the warehousing of unused space by collocating telecommunications carriers, provided, however, that the incumbent LEC shall not set maximum space limitations applicable to such carriers unless the incumbent LEC proves to the state commission that space constraints make such restrictions necessary.

(g) An incumbent LEC shall permit collocating telecommunications carriers to collocate equipment and connect such equipment to unbundled network transmission elements obtained from the incumbent LEC, and shall not require such telecommunications carriers to bring their own transmission facilities to the incumbent LEC's premises in which they seek to collocate equipment.

(h) An incumbent LEC shall permit a collocating telecommunications carrier to interconnect its network with that of another collocating telecommunications carrier at the incumbent LEC's premises and to connect its collocated equipment to the collocated equipment of another telecommunications carrier within the same premises provided that the collocated equipment is also used for interconnection with the incumbent LEC or for access to the incumbent LEC's unbundled network elements.

(1) An incumbent LEC shall provide the connection between the equipment in the collocated spaces of two or more telecommunications carriers, unless the incumbent LEC permits one or more of the collocating parties to provide this connection for themselves; and

(2) An incumbent LEC is not required to permit collocating telecommunications carriers to place their own connecting transmission facilities within the incumbent LEC's premises outside of the actual physical collocation space.

(i) An incumbent LEC may require reasonable security arrangements to separate a collocating telecommunications carrier's space from the incumbent LEC's facilities.

(j) An incumbent LEC shall permit a collocating telecommunications carrier to subcontract the construction of physical collocation arrangements with contractors approved by the incumbent LEC, provided, however, that the incumbent LEC shall not unreasonably withhold approval of contractors. Approval by an incumbent LEC shall be based on the same criteria it uses in approving contractors for its own purposes.

§51.325 Notice of network changes: Public notice requirement.

(a) An incumbent local exchange carrier (''LEC'') must provide public notice regarding any network change that:

(1) Will affect a competing service provider's performance or ability to provide service; or

(2) Will affect the incumbent LEC's interoperability with other service providers.

(b) For purposes of this section, *interoperability* means the ability of two or more facilities, or networks, to be connected, to exchange information, and to use the information that has been exchanged.

(c) Until public notice has been given in accordance with §§51.325 through 51.335, an incumbent LEC may not disclose to separate affiliates, separated affiliates, or unaffiliated entities (including actual or potential competing service providers or competitors), information about planned network changes that are subject to this section.

(d) For the purposes of §§51.325 through 51.335, the term *services* means telecommunications services or information services.

[61 FR 47351, Sept. 6, 1996]

EFFECTIVE DATE NOTE: At 61 FR 47351, Sept. 6, 1996, §51.325 was added. The information collection and recordkeeping requirements contained in this section are effective Nov. 15, 1996.

§51.327 Notice of network changes: Content of notice.

(a) Public notice of planned network changes must, at a minimum, include:

(1) The carrier's name and address;

(2) The name and telephone number of a contact person who can supply additional information regarding the planned changes;

(3) The implementation date of the planned changes;

(4) The location(s) at which the changes will occur;

(5) A description of the type of changes planned (Information provided to satisfy this requirement must include, as applicable, but is not limited to, references to technical specifications, protocols, and standards regarding transmission, signaling, routing, and facility assignment as well as references to technical standards that would be applicable to any new technologies or equipment, or that may otherwise affect interconnection); and

(6) A description of the reasonably foreseeable impact of the planned changes.

(b) The incumbent LEC also shall follow, as necessary, procedures relating to confidential or proprietary information contained in §51.335.

[61 FR 47351, Sept. 6, 1996]

EFFECTIVE DATE NOTE: At 61 FR 47351, Sept. 6, 1996, §51.327 was added. The information collection and recordkeeping requirements contained in this section are effective Nov. 15, 1996.

§51.329 Notice of network changes: Methods for providing notice.

(a) In providing the required notice to the public of network changes, an incumbent LEC may use one of the following methods:

(1) Filing a public notice with the Commission; or

(2) Providing public notice through industry fora, industry publications, or the carrier's publicly accessible Internet site. If an incumbent LEC uses any of the methods specified in paragraph (a)(2) of this section, it also must file a certification with the Commission that includes:

(i) A statement that identifies the proposed changes;

(ii) A statement that public notice has been given in compliance with §§51.325 through 51.335; and

(iii) A statement identifying the location of the change information and describing how this information can be obtained.

(b) Until the planned change is implemented, an incumbent LEC must keep the notice available for public inspection, and amend the notice to keep the information complete, accurate and up-to-date.

(c) *Specific filing requirements.* Commission filings under this section must be made as follows:

(1) The public notice or certification must be labeled with one of the following titles, as appropriate: ''Public Notice of Network Change Under Rule 51.329(a),'' ''Certification of Public Notice of Network Change Under Rule

51.329(a),'' ''Short Term Public Notice Under Rule 51.333(a),'' or ''Certification of Short Term Public Notice Under Rule 51.333(a).''

(2) Two paper copies of the incumbent LEC's public notice or certification, required under paragraph (a) of this section, must be sent to ''Secretary, Federal Communications Commission, Washington, DC 20554.'' The date on which this filing is received by the Secretary is considered the official filing date.

(3) In addition, one paper copy and one diskette copy must be sent to the ''Chief, Network Services Division, Common Carrier Bureau, Federal Communications Commission, Washington, DC 20554.'' The diskette copy must be on a standard 3½ inch diskette, formatted in IBM-compatible format to be readable by high-density floppy drives operating under MS DOS 5.X or later compatible versions, and shall be in a word-processing format designated, from time-to-time, in public notices released by the Network Services Division. The diskette must be submitted in ''read only'' mode, and must be clearly labeled with the carrier's name, the filing date, and an identification of the diskette's contents.

[61 FR 47351, Sept. 6, 1996]

EFFECTIVE DATE NOTE: At 61 FR 47351, Sept. 6, 1996, § 51.329 was added. The information collection and recordkeeping requirements contained in this section are effective Nov. 15, 1996.

§ 51.331 Notice of network changes: Timing of notice.

(a) An incumbent LEC shall give public notice of planned changes at the make/buy point, as defined in paragraph (b) of this section, but at least 12 months before implementation, except as provided below:

(1) If the changes can be implemented within twelve months of the make/buy point, public notice must be given at the make/buy point, but at least six months before implementation.

(2) If the changes can be implemented within six months of the make/buy point, public notice may be given pursuant to the short term notice procedures provided in § 51.333.

(b) For purposes of this section, the *make/buy point* is the time at which an incumbent LEC decides to make for itself, or to procure from another entity, any product the design of which affects or relies on a new or changed network interface. If an incumbent LEC's planned changes do not require it to make or to procure a product, then the make/buy point is the point at which the incumbent LEC makes a definite decision to implement a network change.

(1) For purposes of this section, a *product* is any hardware or software for use in an incumbent LEC's network or in conjunction with its facilities that, when installed, could affect the compatibility of an interconnected service provider's network, facilities or services with an incumbent LEC's existing telephone network, facilities or services, or with any of an incumbent carrier's services or capabilities.

(2) For purposes of this section a *definite decision* is reached when an incumbent LEC determines that the change is warranted, establishes a timetable for anticipated implementation, and takes any action toward implementation of the change within its network.

[61 FR 47352, Sept. 6, 1996]

EFFECTIVE DATE NOTE: At 61 FR 47352, Sept. 6, 1996, § 51.331 was added. The information collection and recordkeeping requirements contained in this section are effective Nov. 15, 1996.

§ 51.333 Notice of network changes: Short term notice.

(a) *Certificate of service.* If an incumbent LEC wishes to provide less than six months notice of planned network changes, the public notice or certification that it files with the Commission must include a certificate of service in addition to the information required by § 51.327(a) or § 51.329(a)(2), as applicable. The certificate of service shall include:

(1) A statement that, at least five business days in advance of its filing with the Commission, the incumbent LEC served a copy of its public notice upon each telephone exchange service provider that directly interconnects with the incumbent LEC's network; and

(2) The name and address of each such telephone exchange service provider upon which the notice was served.

(b) *Implementation date.* The Commission will release a public notice of such short term notice filings. Short term notices shall be deemed final on the tenth business day after the release of the Commission's public notice, unless an objection is filed, pursuant to paragraph (c) of this section.

(c) *Objection procedures.* An objection to an incumbent LEC's short term notice may be filed by an information service provider or telecommunication service provider that directly interconnects with the incumbent LEC's network. Such objections must be filed with the Commission, and served on the incumbent LEC, no later than the ninth business day following the release of the Commission's public notice. All objections to an incumbent LEC's short term notice must:

(1) State specific reasons why the objector cannot accommodate the incumbent LEC's changes by the date stated in the incumbent LEC's public notice and must indicate any specific technical information or other assistance required that would enable the objector to accommodate those changes;

(2) List steps the objector is taking to accommodate the incumbent LEC's changes on an expedited basis;

(3) State the earliest possible date (not to exceed six months from the date the incumbent LEC gave its original public notice under this section) by which the objector anticipates that it can accommodate the incumbent LEC's changes, assuming it receives the technical information or other assistance requested under paragraph (c)(1) of this section;

(4) Provide any other information relevant to the objection; and

(5) Provide the following affidavit, executed by the objector's president, chief executive officer, or other corporate officer or official, who has appropriate authority to bind the corporation, and knowledge of the details of the objector's inability to adjust its network on a timely basis:

''I, (*name and title*), under oath and subject to penalty for perjury, certify that I have read this objection, that the statements contained in it are true, that there is good ground to support the objection, and that it is not interposed for purposes of delay. I have appropriate authority to make this certification on behalf of (*objector*) and I agree to provide any information the Commission may request to allow the Commission to evaluate the truthfulness and validity of the statements contained in this objection.''

(d) *Response to objections.* If an objection is filed, an incumbent LEC shall have until no later than the fourteenth business day following the release of the Commission's public notice to file with the Commission a response to the objection and to serve the response on all parties that filed objections. An incumbent LEC's response must:

(1) Provide information responsive to the allegations and concerns identified by the objectors;

(2) State whether the implementation date(s) proposed by the objector(s) are acceptable;

(3) Indicate any specific technical assistance that the incumbent LEC is willing to give to the objectors; and

(4) Provide any other relevant information.

(e) *Resolution.* If an objection is filed pursuant to paragraph (c) of this section, then the Chief, Network Services Division, Common Carrier Bureau, will issue an order determining a reasonable public notice period, *provided however,* that if an incumbent LEC does not file a response within the time period allotted, or if the incumbent LEC's response accepts the latest implementation date stated by an objector, then the incumbent LEC's public notice shall be deemed amended to specify the implementation date requested by the objector, without further Commission action. An incumbent LEC must amend its public notice to reflect any change in the applicable implementation date pursuant to § 51.329(b).

[61 FR 47352, Sept. 6, 1996]

EFFECTIVE DATE NOTE: At 61 FR 47352, Sept. 6, 1996, § 51.333 was added. The information collection and recordkeeping requirements contained in this section are effective Nov. 15, 1996.

§ 51.335 Notice of network changes: Confidential or proprietary information.

(a) If an incumbent LEC claims that information otherwise required to be disclosed is confidential or proprietary, the incumbent LEC's public notice must include, in addition to the information identified in § 51.327(a), a statement that the incumbent LEC will make further information available to those signing a nondisclosure agreement.

(b) *Tolling the public notice period.* Upon receipt by an incumbent LEC of a competing service provider's request for disclosure of confidential or proprietary information, the applicable public notice period will be tolled until the parties agree on the terms of a nondisclosure agreement. An incumbent LEC receiving such a request must amend its public notice as follows:

(1) On the date it receives a request from a competing service provider for disclosure of confidential or proprietary information, to state that the notice period is tolled; and

(2) On the date the nondisclosure agreement is finalized, to specify a new implementation date.

[61 FR 47352, Sept. 6, 1996]

EFFECTIVE DATE NOTE: At 61 FR 47352, Sept. 6, 1996, § 51.335 was added. The information collection and recordkeeping requirements contained in this section are effective Nov. 15, 1996.

Subpart E—Exemptions, Suspensions, and Modifications of Requirements of Section 251 of the Act

§ 51.401 State authority.

A state commission shall determine whether a telephone company is entitled, pursuant to section 251(f) of the Act, to exemption from, or suspension or modification of, the requirements of section 251 of the Act. Such determinations shall be made on a case-by-case basis.

§ 51.403 Carriers eligible for suspension or modification under section 251(f)(2) of the Act.

A LEC is not eligible for a suspension or modification of the requirements of section 251(b) or section 251(c) of the Act pursuant to section 251(f)(2) of the Act if such LEC, at the holding company level, has two percent or more of the subscriber lines installed in the aggregate nationwide.

§ 51.405 Burden of proof.

(a) Upon receipt of a bona fide request for interconnection, services, or access to unbundled network elements, a rural telephone company must prove to the state commission that the rural telephone company should be entitled, pursuant to section 251(f)(1) of the Act, to continued exemption from the requirements of section 251(c) of the Act.

(b) A LEC with fewer than two percent of the nation's subscriber lines installed in the aggregate nationwide must prove to the state commission, pursuant to section 251(f)(2) of the Act, that it is entitled to a suspension or modification of the application of a requirement or requirements of section 251(b) or 251(c) of the Act.

(c) In order to justify continued exemption under section 251(f)(1) of the Act once a bona fide request has been made, an incumbent LEC must offer evidence that the application of the requirements of section 251(c) of the Act would be likely to cause undue economic burden beyond the economic burden that is typically associated with efficient competitive entry.

(d) In order to justify a suspension or modification under section 251(f)(2) of the Act, a LEC must offer evidence that the application of section 251(b) or section 251(c) of the Act would be likely to cause undue economic burden beyond the economic burden that is typically associated with efficient competitive entry.

Subpart F—Pricing of Elements

§ 51.501 Scope.

(a) The rules in this subpart apply to the pricing of network elements, interconnection, and methods of obtaining access to unbundled elements, including physical collocation and virtual collocation.

(b) As used in this subpart, the term ''element'' includes network elements,

interconnection, and methods of obtaining interconnection and access to unbundled elements.

§ 51.503 General pricing standard.

(a) An incumbent LEC shall offer elements to requesting telecommunications carriers at rates, terms, and conditions that are just, reasonable, and nondiscriminatory.

(b) An incumbent LEC's rates for each element it offers shall comply with the rate structure rules set forth in §§ 51.507 and 51.509, and shall be established, at the election of the state commission—

(1) Pursuant to the forward-looking economic cost-based pricing methodology set forth in §§ 51.505 and 51.511; or

(2) Consistent with the proxy ceilings and ranges set forth in § 51.513.

(c) The rates that an incumbent LEC assesses for elements shall not vary on the basis of the class of customers served by the requesting carrier, or on the type of services that the requesting carrier purchasing such elements uses them to provide.

§ 51.505 Forward-looking economic cost.

(a) *In general.* The forward-looking economic cost of an element equals the sum of:

(1) The total element long-run incremental cost of the element, as described in paragraph (b); and

(2) A reasonable allocation of forward-looking common costs, as described in paragraph (c).

(b) *Total element long-run incremental cost.* The total element long-run incremental cost of an element is the forward-looking cost over the long run of the total quantity of the facilities and functions that are directly attributable to, or reasonably identifiable as incremental to, such element, calculated taking as a given the incumbent LEC's provision of other elements.

(1) *Efficient network configuration.* The total element long-run incremental cost of an element should be measured based on the use of the most efficient telecommunications technology currently available and the lowest cost network configuration, given the existing location of the incumbent LEC's wire centers.

(2) *Forward-looking cost of capital.* The forward-looking cost of capital shall be used in calculating the total element long-run incremental cost of an element.

(3) *Depreciation rates.* The depreciation rates used in calculating forward-looking economic costs of elements shall be economic depreciation rates.

(c) *Reasonable allocation of forward-looking common costs*—(1) *Forward-looking common costs.* Forward-looking common costs are economic costs efficiently incurred in providing a group of elements or services (which may include all elements or services provided by the incumbent LEC) that cannot be attributed directly to individual elements or services.

(2) *Reasonable allocation.* (i) The sum of a reasonable allocation of forward-looking common costs and the total element long-run incremental cost of an element shall not exceed the stand-alone costs associated with the element. In this context, stand-alone costs are the total forward-looking costs, including corporate costs, that would be incurred to produce a given element if that element were provided by an efficient firm that produced nothing but the given element.

(ii) The sum of the allocation of forward-looking common costs for all elements and services shall equal the total forward-looking common costs, exclusive of retail costs, attributable to operating the incumbent LEC's total network, so as to provide all the elements and services offered.

(d) *Factors that may not be considered.* The following factors shall not be considered in a calculation of the forward-looking economic cost of an element:

(1) *Embedded costs.* Embedded costs are the costs that the incumbent LEC incurred in the past and that are recorded in the incumbent LEC's books of accounts;

(2) *Retail costs.* Retail costs include the costs of marketing, billing, collection, and other costs associated with offering retail telecommunications services to subscribers who are not telecommunications carriers, described in § 51.609;

(3) *Opportunity costs.* Opportunity costs include the revenues that the incumbent LEC would have received for

the sale of telecommunications services, in the absence of competition from telecommunications carriers that purchase elements; and

(4) *Revenues to subsidize other services.* Revenues to subsidize other services include revenues associated with elements or telecommunications service offerings other than the element for which a rate is being established.

(e) *Cost study requirements.* An incumbent LEC must prove to the state commission that the rates for each element it offers do not exceed the forward-looking economic cost per unit of providing the element, using a cost study that complies with the methodology set forth in this section and § 51.511.

(1) A state commission may set a rate outside the proxy ranges or above the proxy ceilings described in § 51.513 only if that commission has given full and fair effect to the economic cost based pricing methodology described in this section and § 51.511 in a state proceeding that meets the requirements of paragraph (e)(2) of this section.

(2) Any state proceeding conducted pursuant to this section shall provide notice and an opportunity for comment to affected parties and shall result in the creation of a written factual record that is sufficient for purposes of review. The record of any state proceeding in which a state commission considers a cost study for purposes of establishing rates under this section shall include any such cost study.

§ 51.507 General rate structure standard.

(a) Element rates shall be structured consistently with the manner in which the costs of providing the elements are incurred.

(b) The costs of dedicated facilities shall be recovered through flat-rated charges.

(c) The costs of shared facilities shall be recovered in a manner that efficiently apportions costs among users. Costs of shared facilities may be apportioned either through usage-sensitive charges or capacity-based flat-rated charges, if the state commission finds that such rates reasonably reflect the costs imposed by the various users.

(d) Recurring costs shall be recovered through recurring charges, unless an incumbent LEC proves to a state commission that such recurring costs are de minimis. Recurring costs shall be considered de minimis when the costs of administering the recurring charge would be excessive in relation to the amount of the recurring costs.

(e) State commissions may, where reasonable, require incumbent LECs to recover nonrecurring costs through recurring charges over a reasonable period of time. Nonrecurring charges shall be allocated efficiently among requesting telecommunications carriers, and shall not permit an incumbent LEC to recover more than the total forward-looking economic cost of providing the applicable element.

(f) State commissions shall establish different rates for elements in at least three defined geographic areas within the state to reflect geographic cost differences.

(1) To establish geographically-deaveraged rates, state commissions may use existing density-related zone pricing plans described in § 69.123 of this chapter, or other such cost-related zone plans established pursuant to state law.

(2) In states not using such existing plans, state commissions must create a minimum of three cost-related rate zones.

§ 51.509 Rate structure standards for specific elements.

In addition to the general rules set forth in § 51.507, rates for specific elements shall comply with the following rate structure rules.

(a) *Local loops.* Loop costs shall be recovered through flat-rated charges.

(b) *Local switching.* Local switching costs shall be recovered through a combination of a flat-rated charge for line ports and one or more flat-rated or per-minute usage charges for the switching matrix and for trunk ports.

(c) *Dedicated transmission links.* Dedicated transmission link costs shall be recovered through flat-rated charges.

(d) *Shared transmission facilities between tandem switches and end offices.* The costs of shared transmission facilities between tandem switches and end offices may be recovered through usage-sensitive charges, or in another manner consistent with the manner

that the incumbent LEC incurs those costs.

(e) *Tandem switching.* Tandem switching costs may be recovered through usage-sensitive charges, or in another manner consistent with the manner that the incumbent LEC incurs those costs.

(f) *Signaling and call-related database services.* Signaling and call-related database service costs shall be usage-sensitive, based on either the number of queries or the number of messages, with the exception of the dedicated circuits known as signaling links, the cost of which shall be recovered through flat-rated charges.

(g) *Collocation.* Collocation costs shall be recovered consistent with the rate structure policies established in the *Expanded Interconnection* proceeding, CC Docket No. 91–141.

§51.511 Forward-looking economic cost per unit.

(a) The forward-looking economic cost per unit of an element equals the forward-looking economic cost of the element, as defined in §51.505, divided by a reasonable projection of the sum of the total number of units of the element that the incumbent LEC is likely to provide to requesting telecommunications carriers and the total number of units of the element that the incumbent LEC is likely to use in offering its own services, during a reasonable measuring period.

(b)(1) With respect to elements that an incumbent LEC offers on a flat-rate basis, the number of units is defined as the discrete number of elements (*e.g.*, local loops or local switch ports) that the incumbent LEC uses or provides.

(2) With respect to elements that an incumbent LEC offers on a usage-sensitive basis, the number of units is defined as the unit of measurement of the usage (*e.g.*, minutes of use or call-related database queries) of the element.

§51.513 Proxies for forward-looking economic cost.

(a) A state commission may determine that the cost information available to it with respect to one or more elements does not support the adoption of a rate or rates that are consistent with the requirements set forth in §§51.505 and 51.511. In that event, the state commission may establish a rate for an element that is consistent with the proxies specified in this section, provided that:

(1) Any rate established through use of such proxies shall be superseded once the state commission has completed review of a cost study that complies with the forward-looking economic cost based pricing methodology described in §§51.505 and 51.511, and has concluded that such study is a reasonable basis for establishing element rates; and

(2) The state commission sets forth in writing a reasonable basis for its selection of a particular rate for the element.

(b) The constraints on proxy-based rates described in this section apply on a geographically averaged basis. For purposes of determining whether geographically deaveraged rates for elements comply with the provisions of this section, a geographically averaged proxy-based rate shall be computed based on the weighted average of the actual, geographically deaveraged rates that apply in separate geographic areas in a state.

(c) *Proxies for specific elements.* (1) *Local loops.* For each state listed below, the proxy-based monthly rate for unbundled local loops, on a statewide weighted average basis, shall be no greater than the figures listed in the table below. (The Commission has not established a default proxy ceiling for loop rates in Alaska.)

TABLE

State	Proxy ceiling
Alabama	$17.25
Arizona	12.85
Arkansas	21.18
California	11.10
Colorado	14.97
Connecticut	13.23
Delaware	13.24
District of Columbia	10.81
Florida	13.68
Georgia	16.09
Hawaii	15.27
Idaho	20.16
Illinois	13.12
Indiana	13.29
Iowa	15.94
Kansas	19.85
Kentucky	16.70
Louisiana	16.98
Maine	18.69

TABLE—Continued

State	Proxy ceiling
Maryland	13.36
Massachusetts	9.83
Michigan	15.27
Minnesota	14.81
Mississippi	21.97
Missouri	18.32
Montana	25.18
Nebraska	18.05
Nevada	18.95
New Hampshire	16.00
New Jersey	12.47
New Mexico	18.66
New York	11.75
North Carolina	16.71
North Dakota	25.36
Ohio	15.73
Oklahoma	17.63
Oregon	15.44
Pennsylvania	12.30
Puerto Rico	12.47
Rhode Island	11.48
South Carolina	17.07
South Dakota	25.33
Tennessee	17.41
Texas	15.49
Utah	15.12
Vermont	20.13
Virginia	14.13
Washington	13.37
West Virginia	19.25
Wisconsin	15.94
Wyoming	25.11

(2) *Local switching.* The blended proxy-based rate for unbundled local switching shall be no greater than 0.4 cents ($0.004) per minute, and no less than 0.2 cents ($0.002) per minute, except that, where a state commission has, before August 8, 1996, established a rate less than or equal to 0.5 cents ($0.005) per minute, that rate may be retained pending completion of a forward-looking economic cost study. The blended rate for unbundled local switching shall be calculated as the sum of the following:

(i) The applicable flat-rated charges for subelements associated with unbundled local switching, such as line ports, divided by the projected average minutes of use per flat-rated subelement; and

(ii) The applicable usage-sensitive charges for subelements associated with unbundled local switching, such as switching and trunk ports. A weighted average of such charges shall be used in appropriate circumstances, such as when peak and off-peak charges are used.

(3) *Dedicated transmission links.* The proxy-based rates for dedicated transmission links shall be no greater than the incumbent LEC's tariffed interstate charges for comparable entrance facilities or direct-trunked transport offerings, as described in §§ 69.110 and 69.112 of this chapter.

(4) *Shared transmission facilities between tandem switches and end offices.* The proxy-based rates for shared transmission facilities between tandem switches and end offices shall be no greater than the weighted per-minute equivalent of DS1 and DS3 interoffice dedicated transmission link rates that reflects the relative number of DS1 and DS3 circuits used in the tandem to end office links (or a surrogate based on the proportion of copper and fiber facilities in the interoffice network), calculated using a loading factor of 9,000 minutes per month per voice-grade circuit, as described in § 69.112 of this chapter.

(5) *Tandem switching.* The proxy-based rate for tandem switching shall be no greater than 0.15 cents ($0.0015) per minute of use.

(6) *Collocation.* To the extent that the incumbent LEC offers a comparable form of collocation in its interstate expanded interconnection tariffs, as described in §§ 64.1401 and 69.121 of this chapter, the proxy-based rates for collocation shall be no greater than the effective rates for equivalent services in the interstate expanded interconnection tariff. To the extent that the incumbent LEC does not offer a comparable form of collocation in its interstate expanded interconnection tariffs, a state commission may, in its discretion, establish a proxy-based rate, provided that the state commission sets forth in writing a reasonable basis for concluding that its rate would approximate the result of a forward-looking economic cost study, as described in § 51.505.

(7) *Signaling, call-related database, and other elements.* To the extent that the incumbent LEC has established rates for offerings comparable to other elements in its interstate access tariffs, and has provided cost support for those rates pursuant to § 61.49(h) of this chapter, the proxy-based rates for those elements shall be no greater than the effective rates for equivalent services in the interstate access tariffs. In other

cases, the proxy-based rate shall be no greater than a rate based on direct costs plus a reasonable allocation of overhead loadings, pursuant to §61.49(h) of this chapter.

§51.515 Application of access charges.

(a) Neither the interstate access charges described in part 69 of this chapter nor comparable intrastate access charges shall be assessed by an incumbent LEC on purchasers of elements that offer telephone exchange or exchange access services.

(b) Notwithstanding §§51.505, 51.511, and 51.513(d)(2) and paragraph (a) of this section, an incumbent LEC may assess upon telecommunications carriers that purchase unbundled local switching elements, as described in §51.319(c)(1), for interstate minutes of use traversing such unbundled local switching elements, the carrier common line charge described in §69.105 of this chapter, and a charge equal to 75% of the interconnection charge described in §69.124 of this chapter, only until the earliest of the following, and not thereafter:

(1) June 30, 1997;

(2) The later of the effective date of a final Commission decision in CC Docket No. 96–45, *Federal-State Joint Board on Universal Service*, or the effective date of a final Commission decision in a proceeding to consider reform of the interstate access charges described in part 69; or

(3) With respect to a Bell operating company only, the date on which that company is authorized to offer in-region interLATA service in a state pursuant to section 271 of the Act. The end date for Bell operating companies that are authorized to offer interLATA service shall apply only to the recovery of access charges in those states in which the Bell operating company is authorized to offer such service.

(c) Notwithstanding §§51.505, 51.511, and 51.513(d)(2) and paragraph (a) of this section, an incumbent LEC may assess upon telecommunications carriers that purchase unbundled local switching elements, as described in §51.319(c)(1), for intrastate toll minutes of use traversing such unbundled local switching elements, intrastate access charges comparable to those listed in paragraph (b) and any explicit intrastate universal service mechanism based on access charges, only until the earliest of the following, and not thereafter:

(1) June 30, 1997;

(2) The effective date of a state commission decision that an incumbent LEC may not assess such charges; or

(3) With respect to a Bell operating company only, the date on which that company is authorized to offer in-region interLATA service in the state pursuant to section 271 of the Act. The end date for Bell operating companies that are authorized to offer interLATA service shall apply only to the recovery of access charges in those states in which the Bell operating company is authorized to offer such service.

Subpart G—Resale

§51.601 Scope of resale rules.

The provisions of this subpart govern the terms and conditions under which LECs offer telecommunications services to requesting telecommunications carriers for resale.

§51.603 Resale obligation of all local exchange carriers.

(a) A LEC shall make its telecommunications services available for resale to requesting telecommunications carriers on terms and conditions that are reasonable and non-discriminatory.

(b) A LEC must provide services to requesting telecommunications carriers for resale that are equal in quality, subject to the same conditions, and provided within the same provisioning time intervals that the LEC provides these services to others, including end users.

§51.605 Additional obligations of incumbent local exchange carriers.

(a) An incumbent LEC shall offer to any requesting telecommunications carrier any telecommunications service that the incumbent LEC offers on a retail basis to subscribers that are not telecommunications carriers for resale at wholesale rates that are, at the election of the state commission—

(1) Consistent with the avoided cost methodology described in §§ 51.607 and 51.609; or

(2) Interim wholesale rates, pursuant to § 51.611.

(b) Except as provided in § 51.613, an incumbent LEC shall not impose restrictions on the resale by a requesting carrier of telecommunications services offered by the incumbent LEC.

§ 51.607 Wholesale pricing standard.

(a) The wholesale rate that an incumbent LEC may charge for a telecommunications service provided for resale to other telecommunications carriers shall equal the incumbent LEC's existing retail rate for the telecommunications service, less avoided retail costs, as described in § 51.609.

(b) For purposes of this subpart, exchange access services, as defined in section 3 of the Act, shall not be considered to be telecommunications services that incumbent LECs must make available for resale at wholesale rates to requesting telecommunications carriers.

§ 51.609 Determination of avoided retail costs.

(a) Except as provided in § 51.611, the amount of avoided retail costs shall be determined on the basis of a cost study that complies with the requirements of this section.

(b) Avoided retail costs shall be those costs that reasonably can be avoided when an incumbent LEC provides a telecommunications service for resale at wholesale rates to a requesting carrier.

(c) For incumbent LECs that are designated as Class A companies under § 32.11 of this chapter, except as provided in paragraph (d) of this section, avoided retail costs shall:

(1) Include, as direct costs, the costs recorded in USOA accounts 6611 (product management), 6612 (sales), 6613 (product advertising), 6621 (call completion services), 6622 (number services), and 6623 (customer services) (§§ 32.6611, 32.6612, 32.6613, 32.6621, 32.6622, and 32.6623 of this chapter);

(2) Include, as indirect costs, a portion of the costs recorded in USOA accounts 6121–6124 (general support expenses), 6711, 6712, 6721–6728 (corporate operations expenses), and 5301 (telecommunications uncollectibles) (§§ 32.6121–32.6124, 32.6711, 32.6712, 32.6721–32.6728, and 32.5301 of this chapter); and

(3) Not include plant-specific expenses and plant non-specific expenses, other than general support expenses (§§ 32.6110–32.6116, 32.6210–32.6565 of this chapter).

(d) Costs included in accounts 6611–6613 and 6621–6623 described in paragraph (c) of this section (§§ 32.6611–32.6613 and 32.6621–32.6623 of this chapter) may be included in wholesale rates only to the extent that the incumbent LEC proves to a state commission that specific costs in these accounts will be incurred and are not avoidable with respect to services sold at wholesale, or that specific costs in these accounts are not included in the retail prices of resold services. Costs included in accounts 6110–6116 and 6210–6565 described in paragraph (c) of this section (§§ 32.6110–32.6116, 32.6210–32.6565 of this chapter) may be treated as avoided retail costs, and excluded from wholesale rates, only to the extent that a party proves to a state commission that specific costs in these accounts can reasonably be avoided when an incumbent LEC provides a telecommunications service for resale to a requesting carrier.

(e) For incumbent LECs that are designated as Class B companies under § 32.11 of this chapter and that record information in summary accounts instead of specific USOA accounts, the entire relevant summary accounts may be used in lieu of the specific USOA accounts listed in paragraphs (c) and (d) of this section.

§ 51.611 Interim wholesale rates.

(a) If a state commission cannot, based on the information available to it, establish a wholesale rate using the methodology prescribed in § 51.609, then the state commission may elect to establish an interim wholesale rate as described in paragraph (b) of this section.

(b) The state commission may establish interim wholesale rates that are at least 17 percent, and no more than 25 percent, below the incumbent LEC's existing retail rates, and shall articulate the basis for selecting a particular

discount rate. The same discount percentage rate shall be used to establish interim wholesale rates for each telecommunications service.

(c) A state commission that establishes interim wholesale rates shall, within a reasonable period of time thereafter, establish wholesale rates on the basis of an avoided retail cost study that complies with § 51.609.

§ 51.613 Restrictions on resale.

(a) Notwithstanding § 51.605(b), the following types of restrictions on resale may be imposed:

(1) *Cross-class selling.* A state commission may permit an incumbent LEC to prohibit a requesting telecommunications carrier that purchases at wholesale rates for resale, telecommunications services that the incumbent LEC makes available only to residential customers or to a limited class of residential customers, from offering such services to classes of customers that are not eligible to subscribe to such services from the incumbent LEC.

(2) *Short term promotions.* An incumbent LEC shall apply the wholesale discount to the ordinary rate for a retail service rather than a special promotional rate only if:

(i) Such promotions involve rates that will be in effect for no more than 90 days; and

(ii) The incumbent LEC does not use such promotional offerings to evade the wholesale rate obligation, for example by making available a sequential series of 90-day promotional rates.

(b) With respect to any restrictions on resale not permitted under paragraph (a), an incumbent LEC may impose a restriction only if it proves to the state commission that the restriction is reasonable and nondiscriminatory.

(c) *Branding.* Where operator, call completion, or directory assistance service is part of the service or service package an incumbent LEC offers for resale, failure by an incumbent LEC to comply with reseller unbranding or rebranding requests shall constitute a restriction on resale.

(1) An incumbent LEC may impose such a restriction only if it proves to the state commission that the restriction is reasonable and nondiscriminatory, such as by proving to a state commission that the incumbent LEC lacks the capability to comply with unbranding or rebranding requests.

(2) For purposes of this subpart, unbranding or rebranding shall mean that operator, call completion, or directory assistance services are offered in such a manner that an incumbent LEC's brand name or other identifying information is not identified to subscribers, or that such services are offered in such a manner that identifies to subscribers the requesting carrier's brand name or other identifying information.

§ 51.615 Withdrawal of services.

When an incumbent LEC makes a telecommunications service available only to a limited group of customers that have purchased such a service in the past, the incumbent LEC must also make such a service available at wholesale rates to requesting carriers to offer on a resale basis to the same limited group of customers that have purchased such a service in the past.

§ 51.617 Assessment of end user common line charge on resellers.

(a) Notwithstanding the provision in § 69.104(a) of this chapter that the end user common line charge be assessed upon end users, an incumbent LEC shall assess this charge, and the charge for changing the designated primary interexchange carrier, upon requesting carriers that purchase telephone exchange service for resale. The specific end user common line charge to be assessed will depend upon the identity of the end user served by the requesting carrier.

(b) When an incumbent LEC provides telephone exchange service to a requesting carrier at wholesale rates for resale, the incumbent LEC shall continue to assess the interstate access charges provided in part 69 of this chapter, other than the end user common line charge, upon interexchange carriers that use the incumbent LEC's facilities to provide interstate or international telecommunications services to the interexchange carriers' subscribers.

Subpart H—Reciprocal Compensation for Transport and Termination of Local Telecommunications Traffic

§ 51.701 Scope of transport and termination pricing rules.

(a) The provisions of this subpart apply to reciprocal compensation for transport and termination of local telecommunications traffic between LECs and other telecommunications carriers.

(b) *Local telecommunications traffic.* For purposes of this subpart, local telecommunications traffic means:

(1) Telecommunications traffic between a LEC and a telecommunications carrier other than a CMRS provider that originates and terminates within a local service area established by the state commission; or

(2) Telecommunications traffic between a LEC and a CMRS provider that, at the beginning of the call, originates and terminates within the same Major Trading Area, as defined in § 24.202(a) of this chapter.

(c) *Transport.* For purposes of this subpart, transport is the transmission and any necessary tandem switching of local telecommunications traffic subject to section 251(b)(5) of the Act from the interconnection point between the two carriers to the terminating carrier's end office switch that directly serves the called party, or equivalent facility provided by a carrier other than an incumbent LEC.

(d) *Termination.* For purposes of this subpart, termination is the switching of local telecommunications traffic at the terminating carrier's end office switch, or equivalent facility, and delivery of such traffic to the called party's premises.

(e) *Reciprocal compensation.* For purposes of this subpart, a reciprocal compensation arrangement between two carriers is one in which each of the two carriers receives compensation from the other carrier for the transport and termination on each carrier's network facilities of local telecommunications traffic that originates on the network facilities of the other carrier.

§ 51.703 Reciprocal compensation obligation of LECs.

(a) Each LEC shall establish reciprocal compensation arrangements for transport and termination of local telecommunications traffic with any requesting telecommunications carrier.

(b) A LEC may not assess charges on any other telecommunications carrier for local telecommunications traffic that originates on the LEC's network.

§ 51.705 Incumbent LECs' rates for transport and termination.

(a) An incumbent LEC's rates for transport and termination of local telecommunications traffic shall be established, at the election of the state commission, on the basis of:

(1) The forward-looking economic costs of such offerings, using a cost study pursuant to §§ 51.505 and 51.511;

(2) Default proxies, as provided in § 51.707; or

(3) A bill-and-keep arrangement, as provided in § 51.713.

(b) In cases where both carriers in a reciprocal compensation arrangement are incumbent LECs, state commissions shall establish the rates of the smaller carrier on the basis of the larger carrier's forward-looking costs, pursuant to § 51.711.

§ 51.707 Default proxies for incumbent LECs' transport and termination rates.

(a) A state commission may determine that the cost information available to it with respect to transport and termination of local telecommunications traffic does not support the adoption of a rate or rates for an incumbent LEC that are consistent with the requirements of §§ 51.505 and 51.511. In that event, the state commission may establish rates for transport and termination of local telecommunications traffic, or for specific components included therein, that are consistent with the proxies specified in this section, provided that:

(1) Any rate established through use of such proxies is superseded once that state commission establishes rates for transport and termination pursuant to §§ 51.705(a)(1) or 51.705(a)(3); and

(2) The state commission sets forth in writing a reasonable basis for its selection of a particular proxy for transport and termination of local telecommunications traffic, or for specific components included within transport and termination.

(b) If a state commission establishes rates for transport and termination of local telecommunications traffic on the basis of default proxies, such rates must meet the following requirements:

(1) *Termination.* The incumbent LEC's rates for the termination of local telecommunications traffic shall be no greater than 0.4 cents ($0.004) per minute, and no less than 0.2 cents ($0.002) per minute, except that, if a state commission has, before August 8, 1996, established a rate less than or equal to 0.5 cents ($0.005) per minute for such calls, that rate may be retained pending completion of a forward-looking economic cost study.

(2) *Transport.* The incumbent LEC's rates for the transport of local telecommunications traffic, under this section, shall comply with the proxies described in §51.513(d) (3), (4), and (5) that apply to the analogous unbundled network elements used in transporting a call to the end office that serves the called party.

§51.709 Rate structure for transport and termination.

(a) In state proceedings, a state commission shall establish rates for the transport and termination of local telecommunications traffic that are structured consistently with the manner that carriers incur those costs, and consistently with the principles in §§51.507 and 51.509.

(b) The rate of a carrier providing transmission facilities dedicated to the transmission of traffic between two carriers' networks shall recover only the costs of the proportion of that trunk capacity used by an interconnecting carrier to send traffic that will terminate on the providing carrier's network. Such proportions may be measured during peak periods.

§51.711 Symmetrical reciprocal compensation.

(a) Rates for transport and termination of local telecommunications traffic shall be symmetrical, except as provided in paragraphs (b) and (c) of this section.

(1) For purposes of this subpart, symmetrical rates are rates that a carrier other than an incumbent LEC assesses upon an incumbent LEC for transport and termination of local telecommunications traffic equal to those that the incumbent LEC assesses upon the other carrier for the same services.

(2) In cases where both parties are incumbent LECs, or neither party is an incumbent LEC, a state commission shall establish the symmetrical rates for transport and termination based on the larger carrier's forward-looking costs.

(3) Where the switch of a carrier other than an incumbent LEC serves a geographic area comparable to the area served by the incumbent LEC's tandem switch, the appropriate rate for the carrier other than an incumbent LEC is the incumbent LEC's tandem interconnection rate.

(b) A state commission may establish asymmetrical rates for transport and termination of local telecommunications traffic only if the carrier other than the incumbent LEC (or the smaller of two incumbent LECs) proves to the state commission on the basis of a cost study using the forward-looking economic cost based pricing methodology described in §§51.505 and 51.511, that the forward-looking costs for a network efficiently configured and operated by the carrier other than the incumbent LEC (or the smaller of two incumbent LECs), exceed the costs incurred by the incumbent LEC (or the larger incumbent LEC), and, consequently, that such that a higher rate is justified.

(c) Pending further proceedings before the Commission, a state commission shall establish the rates that licensees in the Paging and Radiotelephone Service (defined in part 22, subpart E of this chapter), Narrowband Personal Communications Services (defined in part 24, subpart D of this chapter), and Paging Operations in the Private Land Mobile Radio Services (defined in part 90, subpart P of this chapter) may assess upon other carriers for the transport and termination of local telecommunications traffic based on

the forward-looking costs that such licensees incur in providing such services, pursuant to §§ 51.505 and 51.511. Such licensees' rates shall not be set based on the default proxies described in § 51.707.

§ 51.713 Bill-and-keep arrangements for reciprocal compensation.

(a) For purposes of this subpart, bill-and-keep arrangements are those in which neither of the two interconnecting carriers charges the other for the termination of local telecommunications traffic that originates on the other carrier's network.

(b) A state commission may impose bill-and-keep arrangements if the state commission determines that the amount of local telecommunications traffic from one network to the other is roughly balanced with the amount of local telecommunications traffic flowing in the opposite direction, and is expected to remain so, and no showing has been made pursuant to § 51.711(b).

(c) Nothing in this section precludes a state commission from presuming that the amount of local telecommunications traffic from one network to the other is roughly balanced with the amount of local telecommunications traffic flowing in the opposite direction and is expected to remain so, unless a party rebuts such a presumption.

§ 51.715 Interim transport and termination pricing.

(a) Upon request from a telecommunications carrier without an existing interconnection arrangement with an incumbent LEC, the incumbent LEC shall provide transport and termination of local telecommunications traffic immediately under an interim arrangement, pending resolution of negotiation or arbitration regarding transport and termination rates and approval of such rates by a state commission under sections 251 and 252 of the Act.

(1) This requirement shall not apply when the requesting carrier has an existing interconnection arrangement that provides for the transport and termination of local telecommunications traffic by the incumbent LEC.

(2) A telecommunications carrier may take advantage of such an interim arrangement only after it has requested negotiation with the incumbent LEC pursuant to § 51.301.

(b) Upon receipt of a request as described in paragraph (a) of this section, an incumbent LEC must, without unreasonable delay, establish an interim arrangement for transport and termination of local telecommunications traffic at symmetrical rates.

(1) In a state in which the state commission has established transport and termination rates based on forward-looking economic cost studies, an incumbent LEC shall use these state-determined rates as interim transport and termination rates.

(2) In a state in which the state commission has established transport and termination rates consistent with the default price ranges and ceilings described in § 51.707, an incumbent LEC shall use these state-determined rates as interim rates.

(3) In a state in which the state commission has neither established transport and termination rates based on forward-looking economic cost studies nor established transport and termination rates consistent with the default price ranges described in § 51.707, an incumbent LEC shall set interim transport and termination rates at the default ceilings for end-office switching (0.4 cents per minute of use), tandem switching (0.15 cents per minute of use), and transport (as described in § 51.707(b)(2)).

(c) An interim arrangement shall cease to be in effect when one of the following occurs with respect to rates for transport and termination of local telecommunications traffic subject to the interim arrangement:

(1) A voluntary agreement has been negotiated and approved by a state commission;

(2) An agreement has been arbitrated and approved by a state commission; or

(3) The period for requesting arbitration has passed with no such request.

(d) If the rates for transport and termination of local telecommunications traffic in an interim arrangement differ from the rates established by a state commission pursuant to § 51.705, the state commission shall require carriers to make adjustments to past compensation. Such adjustments to past

compensation shall allow each carrier to receive the level of compensation it would have received had the rates in the interim arrangement equalled the rates later established by the state commission pursuant to §51.705.

§51.717 Renegotiation of existing non-reciprocal arrangements.

(a) Any CMRS provider that operates under an arrangement with an incumbent LEC that was established before August 8, 1996 and that provides for non-reciprocal compensation for transport and termination of local telecommunications traffic is entitled to renegotiate these arrangements with no termination liability or other contract penalties.

(b) From the date that a CMRS provider makes a request under paragraph (a) of this section until a new agreement has been either arbitrated or negotiated and has been approved by a state commission, the CMRS provider shall be entitled to assess upon the incumbent LEC the same rates for the transport and termination of local telecommunications traffic that the incumbent LEC assesses upon the CMRS provider pursuant to the pre-existing arrangement.

Subpart I—Procedures for Implementation of Section 252 of the Act

§51.801 Commission action upon a state commission's failure to act to carry out its responsibility under section 252 of the Act.

(a) If a state commission fails to act to carry out its responsibility under section 252 of the Act in any proceeding or other matter under section 252 of the Act, the Commission shall issue an order preempting the state commission's jurisdiction of that proceeding or matter within 90 days after being notified (or taking notice) of such failure, and shall assume the responsibility of the state commission under section 252 of the Act with respect to the proceeding or matter and shall act for the state commission.

(b) For purposes of this part, a state commission fails to act if the state commission fails to respond, within a reasonable time, to a request for mediation, as provided for in section 252(a)(2) of the Act, or for a request for arbitration, as provided for in section 252(b) of the Act, or fails to complete an arbitration within the time limits established in section 252(b)(4)(C) of the Act.

(c) A state shall not be deemed to have failed to act for purposes of section 252(e)(5) of the Act if an agreement is deemed approved under section 252(e)(4) of the Act.

§51.803 Procedures for Commission notification of a state commission's failure to act.

(a) Any party seeking preemption of a state commission's jurisdiction, based on the state commission's failure to act, shall notify the Commission in accordance with following procedures:

(1) Such party shall file with the Secretary of the Commission a petition, supported by an affidavit, that states with specificity the basis for the petition and any information that supports the claim that the state has failed to act, including, but not limited to, the applicable provisions of the Act and the factual circumstances supporting a finding that the state commission has failed to act;

(2) Such party shall ensure that the state commission and the other parties to the proceeding or matter for which preemption is sought are served with the petition required in paragraph (a)(1) of this section on the same date that the petitioning party serves the petition on the Commission; and

(3) Within fifteen days from the date of service of the petition required in paragraph (a)(1) of this section, the applicable state commission and parties to the proceeding may file with the Commission a response to the petition.

(b) The party seeking preemption must prove that the state has failed to act to carry out its responsibilities under section 252 of the Act.

(c) The Commission, pursuant to section 252(e)(5) of the Act, may take notice upon its own motion that a state commission has failed to act. In such a case, the Commission shall issue a public notice that the Commission has taken notice of a state commission's failure to act. The applicable state

commission and the parties to a proceeding or matter in which the Commission has taken notice of the state commission's failure to act may file, within fifteen days of the issuance of the public notice, comments on whether the Commission is required to assume the responsibility of the state commission under section 252 of the Act with respect to the proceeding or matter.

(d) The Commission shall issue an order determining whether it is required to preempt the state commission's jurisdiction of a proceeding or matter within 90 days after being notified under paragraph (a) of this section or taking notice under paragraph (c) of this section of a state commission's failure to carry out its responsibilities under section 252 of the Act.

§ 51.805 The Commission's authority over proceedings and matters.

(a) If the Commission assumes responsibility for a proceeding or matter pursuant to section 252(e)(5) of the Act, the Commission shall retain jurisdiction over such proceeding or matter. At a minimum, the Commission shall approve or reject any interconnection agreement adopted by negotiation, mediation or arbitration for which the Commission, pursuant to section 252(e)(5) of the Act, has assumed the state's commission's responsibilities.

(b) Agreements reached pursuant to mediation or arbitration by the Commission pursuant to section 252(e)(5) of the Act are not required to be submitted to the state commission for approval or rejection.

§ 51.807 Arbitration and mediation of agreements by the Commission pursuant to section 252(e)(5) of the Act.

(a) The rules established in this section shall apply only to instances in which the Commission assumes jurisdiction under section 252(e)(5) of the Act.

(b) When the Commission assumes responsibility for a proceeding or matter pursuant to section 252(e)(5) of the Act, it shall not be bound by state laws and standards that would have applied to the state commission in such proceeding or matter.

(c) In resolving, by arbitration under section 252(b) of the Act, any open issues and in imposing conditions upon the parties to the agreement, the Commission shall:

(1) Ensure that such resolution and conditions meet the requirements of section 251 of the Act, including the rules prescribed by the Commission pursuant to that section;

(2) Establish any rates for interconnection, services, or network elements according to section 252(d) of the Act, including the rules prescribed by the Commission pursuant to that section; and

(3) Provide a schedule for implementation of the terms and conditions by the parties to the agreement.

(d) An arbitrator, acting pursuant to the Commission's authority under section 252(e)(5) of the Act, shall use final offer arbitration, except as otherwise provided in this section:

(1) At the discretion of the arbitrator, final offer arbitration may take the form of either entire package final offer arbitration or issue-by-issue final offer arbitration.

(2) Negotiations among the parties may continue, with or without the assistance of the arbitrator, after final arbitration offers are submitted. Parties may submit subsequent final offers following such negotiations.

(3) To provide an opportunity for final post-offer negotiations, the arbitrator will not issue a decision for at least fifteen days after submission to the arbitrator of the final offers by the parties.

(e) Final offers submitted by the parties to the arbitrator shall be consistent with section 251 of the Act, including the rules prescribed by the Commission pursuant to that section.

(f) Each final offer shall:

(1) Meet the requirements of section 251, including the rules prescribed by the Commission pursuant to that section;

(2) Establish rates for interconnection, services, or access to unbundled network elements according to section 252(d) of the Act, including the rules prescribed by the Commission pursuant to that section; and

(3) Provide a schedule for implementation of the terms and conditions by

the parties to the agreement. If a final offer submitted by one or more parties fails to comply with the requirements of this section, the arbitrator has discretion to take steps designed to result in an arbitrated agreement that satisfies the requirements of section 252(c) of the Act, including requiring parties to submit new final offers within a time frame specified by the arbitrator, or adopting a result not submitted by any party that is consistent with the requirements of section 252(c) of the Act, and the rules prescribed by the Commission pursuant to that section.

(g) Participation in the arbitration proceeding will be limited to the requesting telecommunications carrier and the incumbent LEC, except that the Commission will consider requests by third parties to file written pleadings.

(h) Absent mutual consent of the parties to change any terms and conditions adopted by the arbitrator, the decision of the arbitrator shall be binding on the parties.

§ 51.809 Availability of provisions of agreements to other telecommunications carriers under section 252(i) of the Act.

(a) An incumbent LEC shall make available without unreasonable delay to any requesting telecommunications carrier any individual interconnection, service, or network element arrangement contained in any agreement to which it is a party that is approved by a state commission pursuant to section 252 of the Act, upon the same rates, terms, and conditions as those provided in the agreement. An incumbent LEC may not limit the availability of any individual interconnection, service, or network element only to those requesting carriers serving a comparable class of subscribers or providing the same service (*i.e.*, local, access, or interexchange) as the original party to the agreement.

(b) The obligations of paragraph (a) of this section shall not apply where the incumbent LEC proves to the state commission that:

(1) The costs of providing a particular interconnection, service, or element to the requesting telecommunications carrier are greater than the costs of providing it to the telecommunications carrier that originally negotiated the agreement, or

(2) The provision of a particular interconnection, service, or element to the requesting carrier is not technically feasible.

(c) Individual interconnection, service, or network element arrangements shall remain available for use by telecommunications carriers pursuant to this section for a reasonable period of time after the approved agreement is available for public inspection under section 252(f) of the Act.

PART 52—NUMBERING

Subpart A—Scope and Authority

Sec.
52.1 Basis and purpose.
52.3 General.
52.5 Definitions.

Subpart B—Administration

52.7 Definitions.
52.9 General requirements.
52.11 North American Numbering Council.
52.13 North American Numbering Plan Administrator.
52.15 Central office code administration.
52.17 Costs of number administration.
52.19 Area code relief.

Subpart C—Number Portability

52.21 Definitions.
52.23 Deployment of long-term database methods for number portability by LECs.
52.25 Database architecture and administration.
52.27 Deployment of transitional measures for number portability.
52.29 Cost recovery for transitional measures for number portability.
52.31 Deployment of long-term database methods for number portability by CMRS providers.
52.32–52.99 [Reserved]
APPENDIX TO PART 52—DEPLOYMENT SCHEDULE FOR LONG-TERM DATABASE METHODS FOR LOCAL NUMBER PORTABILITY

AUTHORITY: Sec. 1, 2, 4, 5, 48 Stat. 1066, as amended; 47 U.S.C. § 151, 152, 154, 155 unless otherwise noted. Interpret or apply secs. 3, 4, 201–05, 207–09, 218, 225–7, 251–2, 271 and 332, 48 Stat. 1070, as amended, 1077; 47 U.S.C. 153, 154, 201–05, 207–09, 218, 225–7, 251–2, 271 and 332 unless otherwise noted.

SOURCE: 61 FR 38637, July 25, 1996, unless otherwise noted.

Subpart A—Scope and Authority

SOURCE: 61 FR 47353, Sept. 6, 1996, unless otherwise noted.

EFFECTIVE DATE NOTE: At 61 FR 47353, Sept. 6, 1996, subpart A was added, effective Oct. 7, 1996.

§ 52.1 Basis and purpose.

(a) *Basis.* These rules are issued pursuant to the Communications Act of 1934, as amended, 47 U.S.C. 151 *et. seq.*

(b) *Purpose.* The purpose of these rules is to establish, for the United States, requirements and conditions for the administration and use of telecommunications numbers for provision of telecommunications services.

§ 52.3 General.

The Commission shall have exclusive authority over those portions of the North American Numbering Plan (NANP) that pertain to the United States. The Commission may delegate to the States or other entities any portion of such jurisdiction.

§ 52.5 Definitions.

As used in this part:

(a) *Incumbent local exchange carrier.* With respect to an area, an ''incumbent local exchange carrier'' is a local exchange carrier that:

(1) On February 8, 1996, provided telephone exchange service in such area; and

(2) (i) On February 8, 1996, was deemed to be a member of the exchange carrier association pursuant to § 69.601(b) of this chapter (47 CFR 69.601(b)); or

(ii) Is a person or entity that, on or after February 8, 1996, became a successor or assign of a member described in paragraph (a)(2)(i) of this section.

(b) *North American Numbering Council* (NANC). The ''North American Numbering Council'' is an advisory committee created under the Federal Advisory Committee Act, 5 U.S.C., App (1988), to advise the Commission and to make recommendations, reached through consensus, that foster efficient and impartial number administration.

(c) *North American Numbering Plan* (NANP). The ''North American Numbering Plan'' is the basic numbering scheme for the telecommunications networks located in Anguilla, Antigua, Bahamas, Barbados, Bermuda, British Virgin Islands, Canada, Cayman Islands, Dominica, Dominican Republic, Grenada, Jamaica, Montserrat, St. Kitts & Nevis, St. Lucia, St. Vincent, Turks & Caicos Islands, Trinidad & Tobago, and the United States (including Puerto Rico, the U.S. Virgin Islands, Guam and the Commonwealth of the Northern Mariana Islands).

(d) *State.* The term ''state'' includes the District of Columbia and the Territories and possessions.

(e) *State commission*. The term ''state commission'' means the commission, board, or official (by whatever name designated) which under the laws of any state has regulatory jurisdiction with respect to intrastate operations of carriers.

(f) *Telecommunications.* ''Telecommunications'' means the transmission, between or among points specified by the user, of information of the user's choosing, without change in the form or content of the information as sent and received.

(g) *Telecommunications carrier.* A ''telecommunications carrier'' is any provider of telecommunications services, except that such term does not include aggregators of telecommunications services (as defined in 47 U.S.C. 226(a)(2)).

(h) *Telecommunications service.* The term ''telecommunications service'' refers to the offering of telecommunications for a fee directly to the public, or to such classes of users as to be effectively available directly to the public, regardless of the facilities used.

Subpart B—Administration

SOURCE: 61 FR 47353, Sept. 6, 1996, unless otherwise noted.

EFFECTIVE DATE NOTE: At 61 FR 47353, Sept. 6, 1996, subpart B was added, effective Oct. 7, 1996.

§ 52.7 Definitions.

As used in this subpart:

(a) *Area code or numbering plan area* (NPA). The term ''area code or numbering plan area'' refers to the first three digits (NXX) of a ten-digit telephone number in the form NXX–NXX–XXXX,

where N represents any one of the numbers 2 through 9 and X represents any one of the numbers 0 through 9.

(b) *Area code relief.* The term ''area code relief'' refers to the process by which central office codes are made available when there are few or no unassigned central office codes remaining in an existing area code and a new area code is introduced.

(c) *Central office (CO) code.* The term ''central office code'' refers to the second three digits (NXX) of a ten-digit telephone number in the form NXX–NXX–XXXX, where N represents any one of the numbers 2 through 9 and X represents any one of the numbers 0 through 9.

(d) *Central office (CO) code administrator.* The term ''central office code administrator'' refers to the entity or entities responsible for managing central office codes in each area code.

(e) *North American Numbering Plan Administrator* (NANPA). The term ''North American Numbering Plan Administrator'' refers to the entity or entities responsible for managing the NANP.

§52.9 General requirements.

(a) To ensure that telecommunications numbers are made available on an equitable basis, the administration of telecommunications numbers shall, in addition to the specific requirements set forth in this subpart:

(1) Facilitate entry into the telecommunications marketplace by making telecommunications numbering resources available on an efficient, timely basis to telecommunications carriers;

(2) Not unduly favor or disfavor any particular telecommunications industry segment or group of telecommunications consumers; and

(3) Not unduly favor one telecommunications technology over another.

(b) If the Commission delegates any telecommunications numbering administration functions to any State or other entity pursuant to 47 U.S.C. 251(e)(1), such State or entity shall perform these functions in a manner consistent with this part.

§52.11 North American Numbering Council.

The duties of the North American Numbering Council (NANC), may include, but are not limited to:

(a) Advising the Commission on policy matters relating to the administration of the NANP in the United States;

(b) Making recommendations, reached through consensus, that foster efficient and impartial number administration;

(c) Initially resolving disputes, through consensus, pertaining to number administration in the United States;

(d) Recommending to the Commission an appropriate entity to serve as the NANPA;

(e) Recommending to the Commission an appropriate mechanism for recovering the costs of NANP administration in the United States, consistent with §52.17;

(f) Carrying out the duties described in §52.25; and

(g) Carrying out this part as directed by the Commission.

§52.13 North American Numbering Plan Administrator.

(a) The North American Numbering Plan Administrator (NANPA) shall be an independent and impartial non-government entity.

(b) The duties of the NANPA shall include, but are not limited to:

(1) Ensuring that the interests of all NANP member countries are considered;

(2) Processing number assignment applications associated with, but not limited to: area codes, N11 codes, carrier identification codes (CICs), ''500'' central office codes, ''900''central office codes, ''456'' central office codes, Signalling System 7 network codes, and Automatic Number Identification Integration Integers (ANI II);

(3) Assigning the numbers and codes described in paragraph (b)(2) of this section;

(4) Maintaining and monitoring administrative number databases;

(5) Assuming additional telecommunications number administration activities, as assigned; and

(6) Ensuring that any action taken with respect to number administration is consistent with this part.

§ 52.15 Central office code administration.

(a) Central Office Code Administration shall be performed by the NANPA, or another entity or entities, as designated by the Commission.

(b) Duties of the entity or entities performing central office code administration may include, but are not limited to:

(1) Processing central office code assignment applications and assigning such codes in a manner that is consistent with this part;

(2) Accessing and maintaining central office code assignment databases;

(3) Contributing to the CO Code Use Survey (COCUS), an annual survey that describes the present and projected use of CO codes for each NPA in the NANP;

(4) Monitoring the use of central office codes within each area code and forecasting the date by which all central office codes within that area code will be assigned; and

(5) Planning for and initiating area code relief, consistent with § 52.19.

(c) Any telecommunications carrier performing central office code administration:

(1) Shall not charge fees for the assignment or use of central office codes to other telecommunications carriers, including paging and CMRS providers, unless the telecommunications carrier assigning the central office code charges one uniform fee for all carriers, including itself and its affiliates; and

(2) Shall, consistent with this subpart, apply identical standards and procedures for processing all central office code assignment requests, and for assigning such codes, regardless of the identity of the telecommunications carrier making the request.

§ 52.17 Costs of number administration.

All telecommunications carriers in the United States shall contribute on a competitively neutral basis to meet the costs of establishing numbering administration.

(a) For each telecommunications carrier, such contributions shall be based on the gross revenues from the provision of its telecommunications services.

(b) The contributions in paragraph (a) of this section shall be based on each contributor's gross revenues from its provision of telecommunications services reduced by all payments for telecommunications services and facilities that have been paid to other telecommunications carriers.

§ 52.19 Area code relief.

(a) State commissions may resolve matters involving the introduction of new area codes within their states. Such matters may include, but are not limited to: Directing whether area code relief will take the form of a geographic split, an overlay area code, or a boundary realignment; establishing new area code boundaries; establishing necessary dates for the implementation of area code relief plans; and directing public education and notification efforts regarding area code changes.

(b) State commissions may perform any or all functions related to initiation and development of area code relief plans, so long as they act consistently with the guidelines enumerated in this part, and subject to paragraph (b)(2) of this section. For the purposes of this paragraph, initiation and development of area code relief planning encompasses all functions related to the implementation of new area codes that were performed by central office code administrators prior to February 8, 1996. Such functions may include: declaring that the area code relief planning process should begin; convening and conducting meetings to which the telecommunications industry and the public are invited on area code relief for a particular area code; and developing the details of a proposed area code relief plan or plans.

(1) The entity or entities designated by the Commission to serve as central office code administrator(s) shall initiate and develop area code relief plans for each area code in each state that has not notified such entity or entities,

pursuant to paragraph (b)(2) of this section, that the state will handle such functions.

(2) Pursuant to paragraph (b)(1) of this section, a state commission must notify the entity or entities designated by the Commission to serve as central office code administrator(s) for its state that such state commission intends to perform matters related to initiation and development of area code relief planning efforts in its state. Notification shall be written and shall include a description of the specific functions the state commission intends to perform. Where the NANP Administrator serves as the central office code administrator, such notification must be made within 120 days of the selection of the NANP Administrator.

(c) New area codes may be introduced through the use of:

(1) A geographic area code split, which occurs when the geographic area served by an area code in which there are few or no central office codes left for assignment is split into two or more geographic parts;

(2) An area code boundary realignment, which occurs when the boundary lines between two adjacent area codes are shifted to allow the transfer of some central office codes from an area code for which central office codes remain unassigned to an area code for which few or no central office codes are left for assignment; or

(3) An area code overlay, which occurs when a new area code is introduced to serve the same geographic area as an existing area code, subject to the following conditions:

(i) No area code overlay may be implemented unless all central office codes in the new overlay area code are assigned to those entities requesting assignment on a first-come, first-serve basis, regardless of the identity of, technology used by, or type of service provided by that entity. No group of telecommunications carriers shall be excluded from assignment of central office codes in the existing area code, or be assigned such codes only from the overlay area code, based solely on that group's provision of a specific type of telecommunications service or use of a particular technology;

(ii) No area code overlay may be implemented unless there exists, at the time of implementation, mandatory ten-digit dialing for every telephone call within and between all area codes in the geographic area covered by the overlay area code; and

(iii) No area code overlay may be implemented unless every telecommunications carrier, including CMRS providers, authorized to provide telephone exchange service, exchange access, or paging service in that NPA 90 days before introduction of the new overlay area code, is assigned during that 90 day period at least one central office code in the existing area code.

EFFECTIVE DATE NOTE: At 61 FR 47353, Sept. 6, 1996, §52.19 was added. The information collection and recordkeeping requirements contained in paragraph (b) of this section are effective Nov. 15, 1996.

Subpart C—Number Portability

SOURCE: 61 FR 38637, July 25, 1996, unless otherwise noted. Redesignated at 61 FR 47353, Sept. 6, 1996.

EFFECTIVE DATE NOTE: At 61 FR 47353, Sept. 6, 1996, subpart B (consisting of §§52.1–52.99) was redesignated as subpart C (consisting of §§52.21–52.99), effective Oct. 7, 1996.

§52.21 Definitions.

As used in this subpart:

(a) The term *broadband PCS* has the same meaning as that term is defined in §24.5 of this chapter.

(b) The term *cellular service* has the same meaning as that term is defined in §22.99 of this chapter.

(c) The term *covered SMR* means either 800 MHz and 900 MHz SMR licensees that hold geographic area licenses or incumbent wide area SMR licensees that offer real-time, two-way switched voice service that is interconnected with the public switched network, either on a stand-alone basis or packaged with other telecommunications services. This term does not include local SMR licensees offering mainly dispatch services to specialized customers in a non-cellular system configuration, licensees offering only data, one-way, or stored voice services on an interconnected basis, or any SMR provider that is not interconnected to the public switched network.

(d) The term *database method* means a number portability method that utilizes one or more external databases for providing called party routing information.

(e) The term *downstream database* means a database owned and operated by an individual carrier for the purpose of providing number portability in conjunction with other functions and services.

(f) The term *incumbent wide area SMR licensee* has the same meaning as that term is defined in § 20.3 of this chapter.

(g) The term *local exchange carrier* means any person that is engaged in the provision of telephone exchange service or exchange access. For purposes of this subpart, such term does not include a person insofar as such person is engaged in the provision of a commercial mobile service under 47 U.S.C. 332(c).

(h) The term *local number portability administrator (LNPA)* means an independent, non-governmental entity, not aligned with any particular telecommunications industry segment, whose duties are determined by the NANC.

(i) The term *location portability* means the ability of users of telecommunications services to retain existing telecommunications numbers without impairment of quality, reliability, or convenience when moving from one physical location to another.

(j) The term *long-term database method* means a database method that complies with the performance criteria set forth in § 52.3(a).

(k) The term *number portability* means the ability of users of telecommunications services to retain, at the same location, existing telecommunications numbers without impairment of quality, reliability, or convenience when switching from one telecommunications carrier to another.

(l) The term *regional database* means an SMS database or an SMS/SCP pair that contains information necessary for carriers to provide number portability in a region as determined by the NANC.

(m) The term *service control point (SCP)* means a database in the public switched network which contains information and call processing instructions needed to process and complete a telephone call. The network switches access an SCP to obtain such information. Typically, the information contained in an SCP is obtained from the SMS.

(n) The term *service management system (SMS)* means a database or computer system not part of the public switched network that, among other things:

(1) Interconnects to an SCP and sends to that SCP the information and call processing instructions needed for a network switch to process and complete a telephone call; and

(2) Provides telecommunications carriers with the capability of entering and storing data regarding the processing and completing of a telephone call.

(o) The term *service portability* means the ability of users of telecommunications services to retain existing telecommunications numbers without impairment of quality, reliability, or convenience when switching from one telecommunications service to another, without switching from one telecommunications carrier to another.

(p) The term *service provider portability* means the ability of users of telecommunications services to retain, at the same location, existing telecommunications numbers without impairment of quality, reliability, or convenience when switching from one telecommunications carrier to another.

(q) The term *transitional measure* means a method such as Remote Call Forwarding (RCF), Flexible Direct Inward Dialing (DID), or other comparable and technically feasible arrangement that allows one local exchange carrier to transfer telephone numbers from its network to the network of another telecommunications carrier, but does not comply with the performance criteria set forth in § 52.3(a).

[61 FR 38637, July 25, 1996. Redesignated at 61 FR 47353, Sept. 6, 1996, as amended at 61 FR 47355, Sept. 6, 1996]

EFFECTIVE DATE NOTE: At 61 FR 47355, Sept. 6, 1996, in § 51.21, paragraphs (g) through (k), (m) through (r) and (v), were redesignated as (f) through (j), (k) through (p) and (q); paragraphs (f), (l), (s), (t) and (u) were removed, effective Oct. 7, 1996. For the

convenience of the user, the superseded text is set forth as follows:

§52.21 Definitions.

* * * * *

(f) The term *incumbent local exchange carrier* means, with respect to an area, the local exchange carrier that:

(1) On February 8, 1996, provided telephone exchange service in such area; and

(2)(i) On February 8, 1996, was deemed to be a member of the exchange carrier association pursuant to §69.601(b) of the Commission's regulations (47 CFR 69.601(b)); or

(ii) Is a person or entity that, on or after February 8, 1996, became a successor or assign of a member described in paragraph (f)(2)(i) of this section.

* * * * *

(l) The term *North American Numbering Council (NANC)* means an advisory committee created under the Federal Advisory Committee Act, 5 U.S.C., App (1988), to advise the Commission and to make recommendations, reached through consensus, that foster efficient and impartial number administration.

* * * * *

(s) The term *telecommunications* means the transmission, between or among points specified by the user, of information of the user's choosing, without change in the form or content of the information as sent and received.

(t) The term *telecommunications carrier* means any provider of telecommunications services, except that such term does not include aggregators of telecommunications services (as defined in 47 U.S.C. 226(a)(2)).

(u) The term *telecommunications service* means the offering of telecommunications for a fee directly to the public, or to such classes of users as to be effectively available directly to the public, regardless of the facilities used.

* * * * *

§52.23 Deployment of long-term database methods for number portability by LECs.

(a) Subject to paragraphs (b) and (c) of this section, all local exchange carriers (LECs) must provide number portability in compliance with the following performance criteria:

(1) Supports network services, features, and capabilities existing at the time number portability is implemented, including but not limited to emergency services, CLASS features, operator and directory assistance services, and intercept capabilities;

(2) Efficiently uses numbering resources;

(3) Does not require end users to change their telecommunications numbers;

(4) Does not require telecommunications carriers to rely on databases, other network facilities, or services provided by other telecommunications carriers in order to route calls to the proper termination point;

(5) Does not result in unreasonable degradation in service quality or network reliability when implemented;

(6) Does not result in any degradation in service quality or network reliability when customers switch carriers;

(7) Does not result in a carrier having a proprietary interest;

(8) Is able to migrate to location and service portability; and

(9) Has no significant adverse impact outside the areas where number portability is deployed.

(b) All LECs must provide a long-term database method for number portability in the 100 largest Metropolitan Statistical Areas (MSAs) by December 31, 1998, in accordance with the deployment schedule set forth in the appendix to this part 52.

(c) Beginning January 1, 1999, all LECs must make a long-term database method for number portability available within six months after a specific request by another telecommunications carrier in areas in which that telecommunications carrier is operating or plans to operate.

(d) The Chief, Common Carrier Bureau, may waive or stay any of the dates in the implementation schedule, as the Chief determines is necessary to ensure the efficient development of number portability, for a period not to exceed 9 months (*i.e.*, no later than September 30, 1999).

(e) In the event a LEC is unable to meet the Commission's deadlines for implementing a long-term database method for number portability, it may file with the Commission at least 60 days in advance of the deadline a petition to extend the time by which implementation in its network will be completed. A LEC seeking such relief must demonstrate through substantial,

credible evidence the basis for its contention that it is unable to comply with the deployment schedule set forth in the appendix to this part 52. Such requests must set forth:

(1) The facts that demonstrate why the carrier is unable to meet the Commission's deployment schedule;

(2) A detailed explanation of the activities that the carrier has undertaken to meet the implementation schedule prior to requesting an extension of time;

(3) An identification of the particular switches for which the extension is requested;

(4) The time within which the carrier will complete deployment in the affected switches; and

(5) A proposed schedule with milestones for meeting the deployment date.

(f) The Chief, Common Carrier Bureau, shall monitor the progress of local exchange carriers implementing number portability, and may direct such carriers to take any actions necessary to ensure compliance with the deployment schedule set forth in the appendix to this part 52.

(g) Carriers that are members of the Illinois Local Number Portability Workshop must conduct a field test of any technically feasible long-term database method for number portability in the Chicago, Illinois, area concluding no later than August 31, 1997. The carriers participating in the test must jointly file with the Common Carrier Bureau a report of their findings within 30 days following completion of the test. The Chief, Common Carrier Bureau, shall monitor developments during the field test.

§ 52.25 Database architecture and administration.

(a) The North American Numbering Council (NANC) shall direct establishment of a nationwide system of regional SMS databases for the provision of long-term database methods for number portability.

(b) All telecommunications carriers shall have equal and open access to the regional databases.

(c) The NANC shall select a local number portability administrator(s) (LNPA(s)) to administer the regional databases within seven months of the initial meeting of the NANC.

(d) The NANC shall determine whether one or multiple administrator(s) should be selected, whether the LNPA(s) can be the same entity selected to be the North American Numbering Plan Administrator, how the LNPA(s) should be selected, the specific duties of the LNPA(s), the geographic coverage of the regional databases, the technical interoperability and operational standards, the user interface between telecommunications carriers and the LNPA(s), the network interface between the SMS and the downstream databases, and the technical specifications for the regional databases.

(e) Once the NANC has selected the LNPA(s) and determined the locations of the regional databases, it must report its decisions to the Commission.

(f) The information contained in the regional databases shall be limited to the information necessary to route telephone calls to the appropriate telecommunications carriers. The NANC shall determine what specific information is necessary.

(g) Any state may opt out of its designated regional database and implement a state-specific database. A state must notify the Common Carrier Bureau and NANC that it plans to implement a state-specific database within 60 days from the release date of the Public Notice issued by the Chief, Common Carrier Bureau, identifying the administrator selected by the NANC and the proposed locations of the regional databases. Carriers may challenge a state's decision to opt out of the regional database system by filing a petition with the Commission.

(h) Individual state databases must meet the national requirements and operational standards recommended by the NANC and adopted by the Commission. In addition, such state databases must be technically compatible with the regional system of databases and must not interfere with the scheduled implementation of the regional databases.

(i) Individual carriers may download information necessary to provide number portability from the regional databases into their own downstream

databases. Individual carriers may mix information needed to provide other services or functions with the information downloaded from the regional databases at their own downstream databases. Carriers may not withhold any information necessary to provide number portability from the regional databases on the grounds that such data has been combined with other information in its downstream database.

§52.27 Deployment of transitional measures for number portability.

All LECs shall provide transitional measures, which may consist of Remote Call Forwarding (RCF), Flexible Direct Inward Dialing (DID), or any other comparable and technically feasible method, as soon as reasonably possible upon receipt of a specific request from another telecommunications carrier, until such time as the LEC implements a long-term database method for number portability in that area.

§52.29 Cost recovery for transitional measures for number portability.

Any cost recovery mechanism for the provision of number portability pursuant to §52.7(a), that is adopted by a state commission must not:

(a) Give one telecommunications carrier an appreciable, incremental cost advantage over another telecommunications carrier, when competing for a specific subscriber (*i.e.*, the recovery mechanism may not have a disparate effect on the incremental costs of competing carriers seeking to serve the same customer); or

(b) Have a disparate effect on the ability of competing telecommunications carriers to earn a normal return on their investment.

§52.31 Deployment of long-term database methods for number portability by CMRS providers.

(a) By June 30, 1999, all cellular, broadband PCS, and covered SMR providers must provide a long-term database method for number portability, including the ability to support roaming, in compliance with the performance criteria set forth in §52.3(a).

(b) By December 31, 1998, all cellular, broadband PCS, and covered SMR providers must have the capability to obtain routing information, either by querying the appropriate database themselves or by making arrangements with other carriers that are capable of performing database queries, so that they can deliver calls from their networks to any party that has retained its number after switching from one telecommunications carrier to another.

(c) The Chief, Wireless Telecommunications Bureau, may waive or stay any of the dates in the implementation schedule, as the Chief determines is necessary to ensure the efficient development of number portability, for a period not to exceed 9 months (*i.e.*, no later than September 30, 1999, for the deadline in paragraph (b) of this section, and no later than March 31, 2000, for the deadline in paragraph (a) of this section).

(d) In the event a carrier subject to paragraphs (a) and (b) of this section is unable to meet the Commission's deadlines for implementing a long-term number portability method, it may file with the Commission at least 60 days in advance of the deadline a petition to extend the time by which implementation in its network will be completed. A carrier seeking such relief must demonstrate through substantial, credible evidence the basis for its contention that it is unable to comply with paragraphs (a) and (b) of this section. Such requests must set forth:

(1) The facts that demonstrate why the carrier is unable to meet our deployment schedule;

(2) A detailed explanation of the activities that the carrier has undertaken to meet the implementation schedule prior to requesting an extension of time;

(3) An identification of the particular switches for which the extension is requested;

(4) The time within which the carrier will complete deployment in the affected switches; and

(5) A proposed schedule with milestones for meeting the deployment date.

(e) The Chief, Wireless Telecommunications Bureau, may establish reporting requirements in order to monitor the progress of cellular, broadband

PCS, and covered SMR providers implementing number portability, and may direct such carriers to take any actions necessary to ensure compliance with this deployment schedule.

§§ 52.32–52.99 [Reserved]

APPENDIX TO PART 52—DEPLOYMENT SCHEDULE FOR LONG-TERM DATABASE METHODS FOR LOCAL NUMBER PORTABILITY

Implementation must be completed by the carriers in the relevant MSAs during the periods specified below:

10/97–12/97

Chicago, IL	3
Philadelphia, PA	4
Atlanta, GA	8
New York, NY	2
Los Angeles, CA	1
Houston, TX	7
Minneapolis, MN	12

1/98–3/98

Detroit, MI	6
Cleveland, OH	20
Washington, DC	5
Baltimore, MD	18
Miami, FL	24
Fort Lauderdale, FL	39
Orlando, FL	40
Cincinnati, OH	30
Tampa, FL	23
Boston, MA	9
Riverside, CA	10
San Diego, CA	14
Dallas, TX	11
St. Louis, MO	16
Phoenix, AZ	17
Seattle, WA	22

4/98–6/98

Indianapolis, IN	34
Milwaukee, WI	35
Columbus, OH	38
Pittsburgh, PA	19
Newark, NJ	25
Norfolk, VA	32
New Orleans, LA	41
Charlotte, NC	43
Greensboro, NC	48
Nashville, TN	51
Las Vegas, NV	50
Nassau, NY	13
Buffalo, NY	44
Orange Co, CA	15
Oakland, CA	21
San Francisco, CA	29
Rochester, NY	49
Kansas City, KS	28
Fort Worth, TX	33
Hartford, CT	46
Denver, CO	26
Portland, OR	27

7/98–9/98

Grand Rapids, MI	56
Dayton, OH	61
Akron, OH	73
Gary, IN	80
Bergen, NJ	42
Middlesex, NJ	52
Monmouth, NJ	54
Richmond, VA	63
Memphis, TN	53
Louisville, KY	57
Jacksonville, FL	58
Raleigh, NC	59
West Palm Beach, FL	62
Greenville, SC	66
Honolulu, HI	65
Providence, RI	47
Albany, NY	64
San Jose, CA	31
Sacramento, CA	36
Fresno, CA	68
San Antonio, TX	37
Oklahoma City, OK	55
Austin, TX	60
Salt Lake City, UT	45
Tucson, AZ	71

10/98–12/98

Toledo, OH	81
Youngstown, OH	85
Ann Arbor, MI	95
Fort Wayne, IN	100
Scranton, PA	78
Allentown, PA	82
Harrisburg, PA	83
Jersey City, NJ	88
Wilmington, DE	89
Birmingham, AL	67
Knoxville, KY	79
Baton Rouge, LA	87
Charleston, SC	92
Sarasota, FL	93
Mobile, AL	96
Columbia, SC	98
Tulsa, OK	70
Syracuse, NY	69
Springfield, MA	86
Ventura, CA	72
Bakersfield, CA	84
Stockton, CA	94
Vallejo, CA	99
El Paso, TX	74
Little Rock, AR	90
Wichita, KS	97
New Haven, CT	91
Omaha, NE	75
Albuquerque, NM	76
Tacoma, WA	77

PART 61—TARIFFS

Sec.
61.1 Purpose and application.
61.2 Clear and explicit explanatory statements.

DEFINITIONS

61.3 Definitions.
61.11—61.19 [Reserved]

GENERAL RULES

GENERAL RULES FOR DOMESTIC AND INTERNATIONAL NONDOMINANT CARRIERS

61.20 Method of filing publications.
61.21 Cover letters.

SPECIFIC RULES FOR DOMESTIC AND INTERNATIONAL NONDOMINANT CARRIERS

61.22 Composition of tariffs.
61.23 Notice requirements.
61.32 Method of filing publications.
61.33 Letters of transmittal.
61.35 Delivered free of charges.
61.36 Tariff publications not returned.
61.38 Supporting information to be submitted with letters of transmittal.
61.39 Optional supporting information to be submitted with letters of transmittal for Access Tariff filings effective on or after April 1, 1989, by local exchange carriers serving 50,000 or fewer access lines in a given study area that are described as subset 3 carriers in § 69.602.
61.40 Private line rate structure guidelines.
61.41 Price cap requirements generally.
61.42 Price cap baskets and service categories.
61.43 Annual price cap filings required.
61.44 Adjustments to the PCI for Dominant Interexchange Carriers.
61.45 Adjustments to the PCI for Local Exchange Carriers.
61.46 Adjustments to the API.
61.47 Adjustments to the SBI; pricing bands.
61.48 Transition rules for price cap formula calculations.
61.49 Supporting information to be submitted with letters of transmittal for tariffs of carriers subject to price cap regulation.
61.50 Scope: Optional incentive regulation for rate of return local exchange carriers.

SPECIFIC RULES FOR TARIFF PUBLICATIONS

61.52 Form, size, type, legibility, etc.
61.53 Consecutive numbering.
61.54 Composition of tariffs.
61.55 Contract-based tariffs.
61.56 Supplements.
61.57 Cancellations.
61.58 Notice requirements.
61.59 Effective period required before changes.
61.67 New or discontinued telephone and teletypewriter service points; mileages.
61.68 Special notations.
61.69 Rejection.
61.71 Reissued matter.
61.72 Posting.
61.73 Duplication of rates or regulations.
61.74 References to other instruments.

CONCURRENCES

61.131 Scope.
61.132 Method of filing concurrences.
61.133 Format of concurrences.
61.134 Concurrences for through services.
61.135 Concurrences for other purposes.
61.136 Revocation of concurrences.

APPLICATIONS FOR SPECIAL PERMISSION

61.151 Scope.
61.152 Terms of applications and grants.
61.153 Method of filing applications.

ADOPTION OF TARIFFS AND OTHER DOCUMENTS OF PREDECESSOR CARRIERS

61.171 Adoption notice.
61.172 Changes to be incorporated in tariffs of successor carrier.

SUSPENSIONS

61.191 Carrier to file supplement when notified of suspension.
61.192 Contents of supplement announcing suspension.
61.193 Vacation of suspension order; supplements announcing same; etc.

AUTHORITY: Secs. 1, 4(i), 4(j), 201–205, and 403 of the Communications Act of 1934, as amended; 47 U.S.C. 151, 154(i), 154(j), 201–205, and 403, unless otherwise noted.

SOURCE: 49 FR 40869, Oct. 18, 1984, unless otherwise noted.

§ 61.1 Purpose and application.

(a) The purpose of this part is to prescribe the framework for the initial establishment of and subsequent revisions to tariff publications.

(b) Tariff publications filed with the Commission must conform to the rules in this part. Failure to comply with any provisions of this part may be grounds for rejection of the non-complying publication.

(c) No carrier required to file tariffs may provide any interstate or foreign communication service until every tariff publication for such communication service is on file with the Commission and in effect.

§ 61.2 Clear and explicit explanatory statements.

In order to remove all doubt as to their proper application, all tariff publications must contain clean and explicit explanatory statements regarding the rates and regulations.

DEFINITIONS

§ 61.3 Definitions.

(a) *Act.* The Communications Act of 1934 (48 Stat. 1004; 47 U.S.C. chapter 5), as amended.

(b) *Actual Price Index* (API). An index of the level of aggregate rate element rates in a basket, which index is calculated pursunt to § 61.46.

(c) *Association.* This term has the meaning given it in § 69.2(d).

(d) *Band.* A zone of pricing flexibility for a service category, which zone is calculated pursuant to § 61.47.

(e) *Base period.* For carriers subject to §§ 61.41—61.49, the 12-month period ending six months prior to the effective date of annual price cap tariffs, or for carriers regulated under § 61.50, the 24-month period ending six months prior to the effective date of biennial optional incentive plan tariffs. Base year or base period earnings shall not include amounts associated with exogenous adjustments to the PCI for the sharing or lower formula adjustment mechanisms.

(f) *Basket.* Any class or category of tariffed services:

(1) Which is established by the Commission pursuant to price cap regulation;

(2) The rates of which are reflected in an Actual Price Index; and

(3) The related costs of which are reflected in a Price Cap Index.

(g) *Change in rate structure.* A restructuring or other alternation of the rate components for an existing service.

(h) *Charges.* The price for service based on tariffed rates.

(i) *Commercial contractor.* The commercial firm to whom the Commission annually awards a contract to make copies of Commission records for sale to the public.

(j) *Commission.* The Federal Communications Commission.

(k) *Concurring carrier.* A carrier (other than a connecting carrier) subject to the Act which concurs in and assents to schedules of rates and regulations filed on its behalf an issuing carrier or carriers.

(l) *Connecting carrier.* A carrier engaged in interstate or foreign communication solely through physical connection with the facilities of another carrier not directly or indirectly controlling or controlled by, or under direct or indirect common control with, such carrier.

(m) *Contract-based tariff.* A tariff based on a service contract entered into between an interexchange carrier subject to § 61.42 (a) through (c) or a nondominant carrier and a customer.

(n) *Corrections.* The remedy of errors in typing, spelling, or punctuations.

(o) *Dominant carrier.* A carrier found by the Commission to have market power (i.e., power to control prices).

(p) *GDP Price Index (GDP–PI).* The estimate of the ''Fixed Weight Price Index for Gross Domestic Product, 1987 Weights'' published by the United States Department of Commerce, which the Commission designates by Order.

(q) *GNP Price Index* (GNP–PI). The estimate of the ''Fixed-Weighted Price Index for Gross National Product, 1982 Weights'' published by the United States Department of Commerce, which the Commission designates by Order.

(r) *Issuing carrier.* A carrier subject to the Act that publishes and files a tariff or tariffs with the Commission.

(s) *Local Exchange Carrier.* A telephone company that provides telephone exchange service as defined in section 3(r) of the Act.

(t) *New service offering.* A tariff filing that provides for a class or sub-class of service not previously offered by the carrier involved and that enlarges the range of service options available to ratepayers.

(u) *Non-dominant carrier.* A carrier not found to be dominant.

(v) *Other participating carrier.* A carrier subject to the Act that publishes a tariff containing rates and regulations applicable to the portion or through service it furnishes in conjunction with another subject carrier.

(w) *Price Cap Index* (PCI). An index of costs applying to carriers subject to price cap regulation, which index is calculated for each basket pursuant to § 61.44 or 61.45.

(x) *Price cap regulation.* A method of regulation of dominant carriers provided in §§ 61.41 through 61.49.

(y) *Price cap tariff.* Any tariff filing involving a service that is within a

price cap basket, or that requires calculations pursuant to §61.44, 61.45, 61.46, or 61.47.

(z) *Productivity factor.* An adjustment factor used to make annual adjustments to the Price Cap Index to reflect the margin by which a carrier subject to price cap regulation is expected to improve its productivity relative to the economy as a whole.

(aa) *Rate.* The tariffed price per unit of service.

(bb) *Rate increase.* Any change in a tariff which results in an increased rate or charge to any of the filing carrier's customers.

(cc) *Rate level change.* A tariff change that only affects the actual rate associated with a rate element, and does not affect any tariff regulations or any other wording of tariff language.

(dd) *Regulations.* The body of carrier prescribed rules in a tariff governing the offering of service in that tariff, including rules, practices, classifications, and definitions.

(ee) *Restructured service.* An offering which represents the modification of a method of charging or provisioning a service; or the introduction of a new method of charging or provisioning that does not result in a net increase in options available to customers.

(ff) *Service Band Index* (SBI). An index of the level of aggregate rate element rates in a service category, which index is calculated pursuant to §61.47.

(gg) *Service category.* Any group of rate elements subject to price cap regulation, which group is subject to a band.

(hh) *Supplement.* A publication filed as part of a tariff for the purpose of suspending or cancelling that tariff, or tariff publication and numbered independently from the tariff page series.

(ii) *Tariff.* Schedules of rates and regulations filed by common carriers.

(jj) *Tariff publication, or publication.* A tariff, supplement, revised page, additional page, concurrence, notice of revocation, adoption notice, or any other schedule of rates or regulations.

(kk) *Tariff year.* The period from the day in a calendar year on which a carrier's annual access tariff filing is scheduled to become effective through the preceding day of the subsequent calendar year.

(ll) *Text change.* A change in the text of a tariff which does not result in a change in any rate or regulation.

(mm) *United States.* The several States and Territories, the District of Columbia, and the possessions of the United States.

[54 FR 19840, May 8, 1989, as amended at 55 FR 42382, Oct. 19, 1990; 56 FR 55239, Oct. 25, 1991; 58 FR 36147, July 6, 1993; 59 FR 10301, Mar. 4, 1994; 60 FR 19527, Apr. 19, 1995; 60 FR 20052, Apr. 24, 1995]

§61.11—61.19 [Reserved]

GENERAL RULES

General Rules for Domestic and International Nondominant Carriers

§61.20 Method of filing publications.

(a) Publications sent for filing must be addressed to ''Secretary, Federal Communications Commission, Washington, DC 20554.'' The date on which the publication is received by the Secretary of the Commission (or the Mail Room where submitted by mail) is considered the official filing date.

(b)(1) In addition, for all tariff publications requiring fees as set forth in part 1, subpart G of this chapter, issuing carriers must submit the original of the cover letter (without attachments), FCC Form 159, and the appropriate fee to the Mellon Bank, Pittsburgh, PA at the address set forth in §1.1105 of this chapter. Issuing carriers should submit these fee materials on the same date as the submission in paragraph (a) of this section.

(2) International carriers must certify in their original cover letter that they are authorized under Section 214 of the Communications Act of 1934, as amended, to provide service, and reference the FCC file number of that authorization.

(c) In addition to the requirements set forth in paragraphs (a) and (b) of this section, the issuing carrier must send a copy of the cover letter with one diskette containing both the complete tariff and any attachments, as appropriate, to the Secretary, Federal Communications Commission. In addition, the issuing carrier must send one diskette of the complete tariff and a

copy of the cover letter to the commercial contractor (at its office on Commission premises), and to the Chief, Tariff Review Branch. The latter should be clearly labeled as the ''Public Reference Copy.'' The issuing carrier should file the copies required by this paragraph so they will be received on the same date as the filings in paragraph (a) of this section.

[58 FR 44460, Aug. 23, 1993, as amended at 61 FR 15726, Apr. 9, 1996]

EFFECTIVE DATE NOTE: At 61 FR 15726, Apr. 9, 1996, in §61.20, the preceding undesignated center headings and paragraph (b) were revised. This amendment contains information collection and recordkeeping requirements and will not become effective until approval has been given by the Office of Management and Budget.

§ 61.21 Cover letters.

(a)(1) Except as specified in §61.32(b), all publications filed with the Commission must be accompanied by a cover letter, 8.5 by 11 inches (21.6 cm x 27.9 cm) in size. All cover letters should briefly explain the nature of the filing and indicate the date and method of filing of the original cover letter, as required by §61.20(b)(1).

(2) International carriers must certify that they are authorized under Section 214 of the Communications Act of 1934, as amended, to provide service, and reference the FCC file number of that authorization.

(b) A separate cover letter may accompany each publication, or an issuing carrier may file as many publications as desired with one cover letter.

NOTE: If a receipt for accompanying publication is desired, the cover letter must be sent in duplicate. One copy showing the date of the receipt by the Commission will then be returned to the sender.

[58 FR 44460, Aug. 23, 1993, as amended at 61 FR 15726, Apr. 9, 1996]

EFFECTIVE DATE NOTE: At 61 FR 15726, Apr. 9, 1996, in §61.21, paragraph (a) was revised. Paragraph (a) contains information collection and recordkeeping requirements and will not become effective until approval has been given by the Office of Management and Budget.

SPECIFIC RULES FOR DOMESTIC AND INTERNATIONAL NONDOMINANT CARRIERS

§ 61.22 Composition of tariffs.

(a) The tariff must be submitted on a 3½ inch (8.89 cm) diskette, formatted in an IBM compatible form using MS DOS 5.0 and WordPerfect 5.1 software. The diskette must be submitted in ''read only'' mode. The diskette must be clearly labelled with the carrier's name, Tariff Number, and the date of submission. The cover letter must be submitted on 8½ by 11 inch (21.6 cm x 27.9 cm) paper, and must be plainly printed in black ink.

(b) The tariff must contain the carrier's name, the international Section 214 authorization FCC file number (when applicable), and the information required by Section 203 of the Act.

(c) Changes to a tariff must be made by refiling the entire tariff on a new diskette, with the changed material included. The carrier must indicate in the tariff what changes have been made.

(d) Domestic and international nondominant carriers subject to the provisions of this section are not subject to the tariff filing requirements of §61.54.

[58 FR 44460, Aug. 23, 1993; 58 FR 48323, Sept. 15, 1993, as amended at 61 FR 15727, Apr. 9, 1996]

EFFECTIVE DATE NOTE: At 61 FR 15727, Apr. 9, 1996, in §61.22, the preceding undesignated center heading and paragraphs (b) and (d) were revised. This amendment contains information collection and recordkeeping requirements and will not become effective until approval has been given by the Office of Management and Budget.

§ 61.23 Notice requirements.

(a) Every proposed tariff filing must bear an effective date and, except as otherwise provided by regulation, special permission, or Commission order, must be made on at least the number of days notice specified in this section.

(b) Notice is accomplished by filing the proposed tariff changes with the Commission. Any period of notice specified in this section begins on and includes the date the tariff is received by the Commission, but does not include the effective date. In computing the

notice period required, all days including Sundays and holidays must be counted.

(c) Tariff filings of domestic and international non-dominant carriers must be made on at least one-day notice.

[58 FR 44460, Aug. 23, 1993, as amended at 61 FR 15727, Apr. 9, 1996]

§61.32 Method of filing publications.

(a) Publications sent for filing must be addressed to ''Secretary, Federal Communications Commission, Washington, DC 20554.'' The date on which the publication is received by the Secretary of the Commission (or the Mail Room where submitted by mail) is considered the official filing date.

(b) In addition, for all tariff publications requiring fees as set forth in part 1, subpart G of this chapter, issuing carriers must submit the original of the transmittal letter (without attachments), FCC Form 155, and the appropriate fee to the Mellon Bank, Pittsburgh, PA, at the address set forth in §1.1105. Issuing carriers should submit these fee materials on the same date as the submission in paragraph (a).

(c) In addition to the requirements set forth in paragraphs (a) and (b) of this section, the issuing carrier must send a copy of the transmittal letter with two copies of the proposed tariff pages and all attachments, including the supporting information specified in §61.38 or §61.49, as appropriate, to the Secretary, Federal Communications Commission. In addition, the issuing carrier must send a copy of the publication, supporting information specified in §61.38 or §61.49, as appropriate, and transmittal letter to the commercial contractor (at its office on Commission premises), and to the Chief, Tariff Review Branch. The latter should be clearly labeled as the ''Public Reference Copy.'' The copies of supporting information required here are in addition to those required by §61.38(c). The issuing carrier must file the copies required by this paragraph so they will be received on the same date as the filings in paragraph (a).

[55 FR 19173, May 8, 1990]

§61.33 Letters of transmittal.

(a) Except as specified in §61.32(b), all publications filed with the Commission must be accompanied by a letter of transmittal, A4 (21 cm x 29.7 cm) or 8.5 x 11 inches (21.6 cm x 27.9 cm) in size. All letters of transmittal must (1) concisely explain the nature and purpose of the filing; (2) specify whether supporting information under §61.38 is required; (3) state whether copies have been delivered to the Commercial Contractor and Chief, Tariff Review Branch as required by §61.32, and (4) contain a statement indicating the date and method of filing of the original of the transmittal letter as required by §61.32(b), and the date and method of filing the copies as required by §61.32 (a) and (c).

(b) In addition to the requirements set forth in paragraph (a) of this section, any local exchange carrier choosing to file an Access Tariff under §61.39 must include in the transmittal:

(1) A summary of the filing's basic rates, terms and conditions;

(2) A statement concerning whether any prior Commission facility authorization necessary to the implementation of the tariff has been obtained; and

(3) A statement that the filing is made pursuant to §61.39.

(c) In addition to the requirements set forth in paragraph (a) of this section, any carrier filing a price cap tariff must include in the letter of transmittal a statement that the filing is made pursuant to §61.49.

(d) In addition to the requirements set forth in paragraph (a) of this section, any carrier filing a new or revised tariff made on less than 15 days' notice must include in the letter of transmittal the name, room number, street address, telephone number, and facsimile number of the individual designated by the filing carrier to receive personal or facsimile service of petitions against the filing as required under §1.773(a)(4) of this chapter.

(e) In addition to the requirements set forth in paragraphs (a), (b), and (c) of this section, the letter of transmittal must specifically reference by number any special permission necessary to implement the tariff publication. Special permission must be granted prior

to the filing of the tariff publication, and may not be requested in the transmittal letter.

(f) The letter of transmittal must be substantially in the following format.

(Exact name of carrier in full) _____
(Post Office Address) _____
_____, 19____. _____
(Date) _____
Transmittal No._____
Secretary,
Federal Communications Commission
Washington, DC 20554

Attention: Common Carrier Bureau.

The accompanying tariff (or other publication) issued by _____, and bearing FCC No. _____, effective _____, 19____, is sent to you for filing in compliance with the requirements of the Communications Act of 1934, as amended. (Here give the additional information required.)

(Name of issuing officer or agent) _____

(Title) _____

(g)(1) A separate letter of transmittal may accompany each publication, or the above format may be modified to provide for filing as many publications as desired with one transmittal letter.

(2) For contract-based tariffs defined in §61.3(m), a separate letter of transmittal must accompany each tariff filed. The transmittals must be numbered in a series separate from transmittals for non-contract tariff filing. Numbers must appear on the face of the transmittal and be in the form of ''CTT No. _____'', using CTT as an abbreviation for contract-based tariff transmittals. Contract-based tariffs must also be numbered in a series separate from non-contract-based tariffs. Numbers must be in the form of ''CT No. _____'', using CT as an abbreviation for contract-based tariffs. Each contract-based tariff must be assigned a separate number. Transmittals and tariffs subject to this paragraph shall be filed beginning with the number ''1'' and shall be numbered consecutively.

NOTE: If a receipt for accompanying publication is desired, the letter of transmittal must be sent in duplicate. One copy showing the date of receipt by the Commission will then be returned to the sender.

[55 FR 19173, May 8, 1990, as amended by 56 FR 55239, Oct. 25, 1991; 58 FR 17530, Apr. 5, 1993; 58 FR 44906, Aug. 25, 1993]

§ 61.35 Delivered free of charges.

Tariff publications must be delivered to the Commission free from all charges, including claims for postage.

§ 61.36 Tariff publications not returned.

Tariff publications will not be returned.

§ 61.38 Supporting information to be submitted with letters of transmittal.

(a) *Scope.* This section applies to dominant carriers whose gross annual revenue exceed $500,000 for the most recent 12 month period of operations or are estimated to exceed $500,000 for a representative 12 month period. Local exchange carriers serving 50,000 or fewer access lines in a given study area that are described as subset 3 carriers in §69.602 of this chapter may submit Access Tariff filings for that study area pursuant to either this section or §61.39. However, the Commission may require any carrier to submit such information as may be necessary for a review of a tariff filing. This section (other than the preceding sentence of this paragraph) shall not apply to tariff filings proposing rates for services identified in §61.42 (a), (b), (d), (e), and (g), promotional offerings that relate to services subject to price cap regulation, tariff filings proposing rates for services identified in §61.50, or to tariff filings, other than promotional filings, filed on 14 days' notice pursuant to §61.58(c)(6).

(b) *Explanation and data supporting either changes or new tariff offerings.* The material to be submitted for a tariff change which affects rates or charges or for a tariff offering a new service, must include an explanation of the changed or new matter, the reasons for the filing, the basis of ratemaking employed, and economic information to support the changed or new matter.

(1) For a tariff change the carrier must submit the following, including complete explanations of the bases for the estimates.

(i) A cost of service study for all elements for the most recent 12 month period;

(ii) A study containing a projection of costs for a representative 12 month period;

(iii) Estimates of the effect of the changed matter on the traffic and revenues from the service to which the changed matter applies, the carrier's other service classifications, and the carrier's overall traffic and revenues. These estimates must include the projected effects on the traffic and revenues for the same representative 12 month period used in (ii) above.

(2) For a tariff filing offering a new service, the carrier must submit the following, including complete explanations of the bases for the estimates.

(i) A study containing a projection of costs for a representative 12 month period; and

(ii) Estimates of the effect of the new matter on the traffic and revenues from the service to which the new matter applies, the carrier's other service classifications, and the carrier's overall traffic and revenues. These estimates must include the projected effects on the traffic and revenues for the same representative 12 month period used in paragraph (b)(2)(i) of this section.

(3) For a tariff filing that introduces or changes a contribution charge for special access and expanded interconnection, as defined in § 69.122 of this chapter, the carrier must submit information sufficient to establish that the charge has been calculated in a manner that complies with the Commission order authorizing the contribution charge.

(4) For a tariff that introduces a system of density pricing zones, as described in § 69.123 of this chapter, the carrier must, before filing its tariff, submit a density pricing zone plan including, *inter alia*, documentation sufficient to establish that the system of zones reasonably reflects cost-related characteristics, such as the density of total interstate traffic in central offices located in the respective zones, and receive approval of its proposed plan.

(c) *Working papers and statistical data.* (1) Concurrently with the filing of any tariff change or tariff filing for a service not previously offered, the Chief, Tariff Review Branch must be provided two sets of working papers containing the information underlying the data supplied in response to paragraph (b) of this section, and a clear explanation of how the working papers relate to that information.

(2) All statistical studies must be submitted and supported in the form prescribed in § 1.363 of the Commission's Rules.

(d) *Form and content of additional material to be submitted with certain rate increases.* In the circumstances set out in paragraphs (d)(1) and (2) of this section, the filing carrier must submit all additional cost, marketing and other data underlying the working papers to justify a proposed rate increase. The carrier must submit this information in suitable form to serve as the carrier's direct case in the event the rate increase is set by the Commission for investigation.

(1) Rate increases affecting single services or tariffed items.

(i) A rate increase in any service or tariffed item which results in more than $1 million in additional annual revenues, calculated on the basis of existing quantities in service, without regard to the percentage increase in such revenues; or

(ii) A single rate increase in any service or tariffed item, or successive rate increases in the same service or tariffed item within a 12 month period, either of which results in:

(A) At least a 10 percent increase in annual revenues from that service or tariffed item, and

(B) At least $100,000 in additional annual revenues, both calculated on the basis of existing quantities in service.

(2) Rate increases affecting more than one service or tariffed item.

(i) A general rate increase in more than one service or tariffed item occurring at one time, which results in more than $1 million in additional revenues calculated on the basis of existing quantities in service, without regard to the percentage increase in such revenues; or

(ii) A general rate increase in more than one service or tariffed item occurring at one time, or successive general rate increases in the same services or tariffed items occurring within a 12

month period, either of which results in:

(A) At least a 10 percent increase in annual revenues from those services or tariffed items, and

(B) At least $100,000 in additional annual revenues, both calculated on the basis of existing quantities in service.

(e) *Submission of explanation and data by connecting carriers.* If the changed or new matter is being filed by the issuing carrier at the request of a connecting carrier, the connecting carrier must provide the data required by paragraphs (b) and (c) of this section on the date the issuing carrier files the tariff matter with the Commission.

(f) *Copies of explanation and data to customers.* Concurrently with the filing of any rate for special construction (or special assembly equipment and arrangements) developed on the basis of estimated costs, the offering carrier must transmit to the customer a copy of the explanation and data required by paragraphs (b) and (c) of this section.

[49 FR 40869, Oct. 18, 1984, as amended at 53 FR 36289, Sept. 19, 1988; 54 FR 19841, May 8, 1989; 55 FR 42382, Oct. 19, 1990; 56 FR 55239, Oct. 25, 1991; 57 FR 54330, Nov. 18, 1992; 58 FR 36147, July 6, 1993; 58 FR 48762, Sept. 17, 1993]

§ 61.39 Optional supporting information to be submitted with letters of transmittal for Access Tariff filings effective on or after April 1, 1989, by local exchange carriers serving 50,000 or fewer access lines in a given study area that are described as subset 3 carriers in § 69.602.

(a) *Scope.* This section provides for an optional method of filing for any local exchange carrier that is described as subset 3 carrier in § 69.602 of this chapter, which elects to issue its own Access Tariff for a period commencing on or after April 1, 1989, and which serves 50,000 or fewer access lines in a study area as determined under § 36.611(a)(8) of this chapter. However, the Commission may require any carrier to submit such information as may be necessary for review of a tariff filing. This section (other than the preceding sentence of this paragraph) shall not apply to tariff filings proposing rates for services identified in § 61.42(d), (e) and (g), which filings are submitted by carriers subject to price cap regulation, or to tariff filings proposing rates for services identified in § 61.50, which filings are submitted by carriers subject to optional incentive regulation.

(b) *Explanation and data supporting tariff changes.* The material to be submitted to either a tariff change or a new tariff which affects rates or charges must include an explanation of the filing in the transmittal as required by § 61.33. The basis for ratemaking must comply with the following requirements. Except as provided in paragraph (b)(5) of this section, it is not necessary to submit this supporting data at the time of filing. However, the local exchange carrier should be prepared to submit the data promptly upon reasonable request by the Commission or interested parties.

(1) For a tariff change, the local exchange carrier that is a cost schedule carrier must propose Tariff Sensitive rates based on the following:

(i) For the first period, a cost of service study for Traffic Sensitive elements for the most recent 12 month period with related demand for the same period.

(ii) For subsequent filings, a cost of service study for Traffic Sensitive elements for the total period since the local exchange carrier's last annual filing, with related demand for the same period.

(2) For a tariff change, the local exchange company that is an average schedule carrier must propose Traffic Sensitive rates based on the following:

(i) For the first period, the local exchange carrier's most recent annual Traffic Sensitive settlement from the National Exchange Carrier Association pool.

(ii) For subsequent filings, an amount calculated to reflect the Traffic Sensitive average schedule pool settlement the carrier would have received if the carrier had continued to participate, based upon the most recent average schedule formulas approved by the Commission.

(3) For a tariff change, the local exchange carrier that is a cost schedule carrier must propose Common Line rates based on the following:

(i) For the first period the Carrier Common Line revenue requirement shall be determined by a cost of service

study for the most recent 12 month period. The Carrier Common Line revenue requirement shall be divided by a factor equal to the demand over the preceding 12-month period, multiplied by the ratio of Carrier Common Line minutes of use during the most recent 12-month period over Carrier Common Line minutes of use in the preceding 12-month period.

(ii) For subsequent filings, the Carrier Common Line revenue requirement shall be determined by a cost of service study for the total period since the carrier's last biennial access filing. The Carrier Common Line revenue requirement determined in this manner shall be divided by a factor equal to the demand over the preceding 12-month period, multiplied by the ratio of Carrier Common Line minutes of use during the most recent 12-month period over Carrier Common Line minutes of use in the preceding 12-month period.

(4) For a tariff change, the local exchange carrier which is an average schedule carrier must propose common line rates based on the following:

(i) For the first period, the local exchange carrier's most recent annual Common Line settlement from the National Exchange Carrier Association that is conclusively binding upon the carrier and the Association. This carrier common line settlement amount shall be divided by a factor equal to the demand over the preceding 12-month period, multiplied by the ratio of Carrier Common Line minutes of use during the most recent 12-month period over Carrier Common Line minutes of use in the preceding 12-month period.

(ii) For subsequent filings, an amount calculated to reflect the average schedule pools settlement the carrier would have received if the carrier had continued to participate, based upon the most recent average schedule Common Line formulas approved by the Commission. This amount shall be divided by a factor equal to the demand over the preceding 12-month period, multiplied by the ratio of Carrier Common Line minutes of use during the most recent 12-month period over Carrier Common Line minutes of use in the preceding 12-month period.

(5) For End User Common Line charges included in a tariff pursuant to this Section, the local exchange carrier must provide supporting information for the two-year historical period with its letter of transmittal in accordance with § 61.38.

(c) *Maximum allowable rate of return.* Local exchange carriers filing tariffs under this section are not required to comply with §§ 65.700 through 65.701, inclusive, of the Commission's Rules, except with respect to periods during which tariffs were not subject to this section. The Commission may require any carrier to submit such information if it deems it necessary to monitor the carrier's earnings. However, rates must be calculated based on the local exchange carrier's prescribed rate of return applicable to the period during which the rates are effective.

(d) Rates for a new service that is the same as that offered by a price cap regulated local exchange carrier providing service in an adjacent serving area are deemed presumptively lawful, if the proposed rates, in the aggregate, are no greater than the rates established by the price cap local exchange carrier. Tariff filings made pursuant to this paragraph must include the following:

(1) A brief explanation of why the service is like an existing service offered by a geographically adjacent price cap regulated local exchange carrier; and

(2) Data to establish compliance with this subsection that, in aggregate, the proposed rates for the new service are no greater than those in effect for the same or comparable service offered by that same geographically adjacent price cap regulated local exchange carrier. Compliance may be shown through submission of applicable tariff pages of the adjacent carrier; a showing that the serving areas are adjacent; any necessary explanations and work sheets.

(e) Average schedule companies filing pursuant to this section shall retain their status as average schedule companies.

[52 FR 26682, July 16, 1987, as amended at 53 FR 36289, Sept. 19, 1988; 55 FR 42382, Oct. 19, 1990; 58 FR 36147, July 6, 1993]

§ 61.40 Private line rate structure guidelines.

(a) The Commission uses a variety of tools to determine whether a carrier's private line tariffs are just, reasonable, and nondiscriminatory. The carrier's burden of cost justification can be reduced when its private line rate structures comply with the following five guidelines.

(1) Rate structures for the same or comparable services should be integrated;

(2) Rate structures for the same or comparable services should be consistent with one another;

(3) Rate elements should be selected to reflect market demand, pricing convenience for the carrier and customers, and cost characteristics; a rate element which appears separately in one rate structure should appear separately in all other rate structures;

(4) Rate elements should be consistently defined with respect to underlying service functions and should be consistently employed through all rate structures; and

(5) Rate structures should be simple and easy to understand.

(b) The guidelines do not preclude a carrier, in a given case when a private line tariff does not comply with these guidelines, from justifying its departure from the guidelines and showing that its tariff is just, reasonable, and nondiscriminatory.

§ 61.41 Price cap requirements generally.

(a) Sections 61.42 through 61.49 shall apply as follows:

(1) To dominant interexchange carriers, as specified by Commission order;

(2) To such local exchange carriers as specified by Commission order, and to all local exchange carriers, other than average schedule companies, that are affiliated with such carriers; and

(3) On an elective basis, to local exchange carriers, other than those specified in paragraph (a)(2) of this section, that are neither participants in any Association tariff, nor affiliated with any such participants, except that affiliation with average schedule companies shall not bar a carrier from electing price cap regulation provided the carrier is otherwise eligible.

(b) If a telephone company, or any one of a group of affiliated telephone companies, files a price cap tariff in one study area, that telephone company and its affiliates, except its average schedule affiliates, must file price cap tariffs in all their study areas.

(c) The following rules apply to telephone companies subject to price cap regulation, as that term is defined in § 61.3(w), which are involved in mergers, acquisitions, or similar transactions.

(1) Any telephone company subject to price cap regulation that is a party to a merger, acquisition, or similar transaction shall continue to be subject to price cap regulation notwithstanding such transaction.

(2) Where a telephone company subject to price cap regulation acquires, is acquired by, merges with, or otherwise becomes affiliated with a telephone company that is not subject to price cap regulation, the latter telephone company shall become subject to price cap regulation no later than one year following the effective date of such merger, acquisition, or similar transaction and shall accordingly file price cap tariffs to be effective no later than that date in accordance with the applicable provisions of this part 61.

(3) Notwithstanding the provisions of § 61.41(c)(2) above, when a telephone company subject to price cap regulation acquires, is acquired by, merges with, or otherwise becomes affiliated with a telephone company that qualifies as an 'average schedule' company, the latter company may retain its 'average schedule' status or become subject to price cap regulation in accordance with § 69.3(i)(3) and the requirements referenced in that section.

(d) Local exchange carriers that become subject to price cap regulation as that term is defined in § 61.3(w) of this chapter shall not be eligible to withdraw from such regulation.

[55 FR 42382, Oct. 19, 1990; 55 FR 50558, Dec. 7, 1990, as amended at 56 FR 55239, Oct. 25, 1991]

§ 61.42 Price cap baskets and service categories.

(a) Each dominant interexchange carrier subject to price cap regulation shall establish three baskets as follows:

(1) A residential services basket;

(2) An 800 service basket; and

(3) A business services basket.

(b)(1) The residential basket shall contain such services as the Commission shall permit or require, including the following service categories:

(i) Domestic day MTS;

(ii) Domestic evening MTS;

(iii) Domestic night/weekend MTS;

(iv) International MTS;

(v) Operator and credit card services; and

(vi) Reach Out America.

(2) The 800 service basket shall contain 800 Directory Assistance.

(3) The business services basket shall contain analog private lines, including analog voice grade private line, unless provided under contract to a government entity, and terrestrial television transmission service.

(c) Dominant interexchange carriers subject to price cap regulations shall exclude the following offerings from their price cap baskets:

(1) Special construction services relating to services in § 61.42 (b)(1), (b)(2), and (b)(3);

(2) All other special construction services;

(3) American Telephone and Telegraph Company Tariff F.C.C. No. 11 services;

(4) American Telephone and Telegraph Company Tariff F.C.C. No. 12 services;

(5) American Telephone and Telegraph Company Tariff F.C.C. No. 16 services;

(6) Services subject to below-the-line accounting;

(7) International private line and record carrier services;

(8) Contract-based tariffs;

(9) Services removed from price cap regulation pursuant to the Report and Order in Docket No. 90–132;

(10) [Reserved]

(11) All other promotional offerings;

(12) Custom tariff services;

(13) Readyline 800 service;

(14) AT&T 800 service;

(15) Megacom 800 service;

(16) Other 800 services; and

(17) Commercial services.

(18) Such other services as the Commission may specify.

(d) Each local exchange carrier subject to price cap regulation shall establish baskets of services as follows:

(1) A basket for the common line interstate access elements as described in §§ 69.103, 69.104, 69.105, and 69.115 of this chapter;

(2) A basket for traffic sensitive switched interstate access elements;

(3) A basket for trunking services as described in §§ 69.110, 69.111, 69.112, 69.114, 69.124, and 69.125 of this chapter;

(4) To the extent that a local exchange carrier specified in § 61.41(a) (2) or (3) offers interstate interexchange services that are not classified as access services for the purpose of part 69 of this chapter, such exchange carrier shall establish a fourth basket for such services.

(5) To the extent that a local exchange carrier specified in §§ 61.41(a) (2) or (3) offers interstate video dialtone services, a basket for basic video dialtone services as described in § 63.54 of this chapter.

(e)(1) The traffic sensitive switched interstate access basket shall contain such services as the Commission shall permit or require, including the following service categories:

(i) Local switching as described in § 69.106;

(ii) Information, as described in § 69.109; and

(iii) Data base access services; and

(iv) Billing name and address, as described in § 69.128 of this chapter.

(2) The trunking basket shall contain such transport and special access services as the Commission shall permit or require, including the following service categories and subcategories:

(i) Voice grade entrance facilities, voice grade direct-trunked transport, voice grade dedicated signalling transport, voice grade special access, WATS special access, metallic special access, and telegraph special access services;

(ii) Audio and video services;

(iii) High capacity flat-rated transport, high capacity special access, and DDS services, including the following service subcategories:

(A) DS1 entrance facilities, DS1 direct-trunked transport, DS1 dedicated signalling transport, and DS1 special access services; and

(B) DS3 entrance facilities, DS3 direct-trunked transport, DS3 dedicated signalling transport, and DS3 special access services;

(iv) Wideband data and wideband analog services;

(v) Tandem-switched transport, as described in § 69.111 of this chapter; and

(vi) Interconnection charge, as described in § 69.124 of this chapter.

(vii) Signalling for tandem switching, as described in § 69.129 of this chapter.

(f) Each local exchange carrier subject to price cap regulation shall exclude from its price cap baskets such services or portions of such services as the Commission has designated or may hereafter designate by order.

(g) New services, other than those within the scope of paragraphs (c) and (f) of this section, must be included in the affected basket at the first annual price cap tariff filing following completion of the base period in which they are introduced. To the extent that such new services are permitted or required to be included in new or existing service categories within the assigned basket, they shall be so included at the first annual price cap tariff filing following completion of the base period in which they are introduced.

[54 FR 19842, May 8, 1989, as amended at 55 FR 42382, Oct. 19, 1990; 55 FR 50558, Dec. 7, 1990; 56 FR 5956, Feb. 14, 1991; 56 FR 55239, Oct. 25, 1991; 57 FR 54718, Nov. 20, 1992; 58 FR 7868, Feb. 10, 1993; 58 FR 29552, May 21, 1993; 58 FR 31914, June 7, 1993; 58 FR 36145, July 6, 1993; 59 FR 10301, Mar. 4, 1994; 59 FR 32930, June 27, 1994; 60 FR 4569, Jan. 24, 1995; 60 FR 13639, Mar. 14, 1995; 60 FR 52346, Oct. 6, 1995]

§ 61.43 Annual price cap filings required.

Carriers subject to price cap regulation shall submit annual price cap tariff filings that propose rates for the upcoming year, that make appropriate adjustments to their PCI, API, and SBI values pursuant to §§ 61.44 through 61.47, and that incorporate the costs and rates of new services into the PCI, API, or SBI calculations pursuant to §§ 61.44(g), 61.45(g), 61.46(b), and 61.47 (b) and (c). Carriers may propose rate or other tariff changes more often than annually, consistent with the requirements of § 61.59.

[54 FR 19842, May 8, 1989, as amended at 55 FR 42383, Oct. 19, 1990]

§ 61.44 Adjustments to the PCI for Dominant Interexchange Carriers.

(a) Dominant interexchange carriers subject to price cap regulation shall file adjustments to the PCI for each basket as part of the annual price cap tariff filing, and shall maintain updated PCIs to reflect the effect of mid–year access and exogenous cost changes.

(b) Subject to paragraph (d) of this section, adjustments to each PCI of dominant interexchange carriers subject to price cap regulation shall be made pursuant to the following formula:

$$PCI_t = PCI_{t-1}[1 + w(GNP-PI - X) + \Delta Y/R + \Delta Z/R]$$

where

GNP–PI = the percentage change in the GNP–PI between the quarter ending six months prior to the effective date of the new annual tariff and the corresponding quarter of the previous year,

X = productivity factor of 3.0%,

ΔY = (new access rate—access rate at the time the PCI was updated to PCI_{t-1}) × (base period demand),

ΔZ = the dollar effect of current regulatory changes when compared to the regulations in effect at the time the PCI was updated to PCI_{t-1}, measured at base period level of operations,

R = base period quantities for each rate element ''i'', multiplied by the price for each rate element ''i'' at the time the PCI was updated to PCI_{t-1},

w = R − (access rate in effect at the time the PCI was updated to PCI_{t-1} × base period demand) + ΔZ, all divided by R,

PCI_t = the new PCI value, and

PCI_{t-1} = the immediately preceding PCI value.

(c) The exogenous cost changes represented by the term ''ΔZ'' in the formula detailed in paragraph (b) of this section, shall be limited to those cost changes that the Commission shall permit or require, and include those caused by:

(1) The completion of the amortization of depreciation reserve deficiencies;

(2) Changes in the Uniform System of Accounts;

(3) Changes in the Separations Manual;

(4) The reallocation of investment from regulated to nonregulated activities pursuant to § 64.901; and

(5) Such tax law changes and other extraordinary exogenous cost changes as the Commission shall permit or require.

These exogenous cost changes shall be apportioned on a cost-causative basis between price cap services as a group, and excluded services as a group. Exogenous cost changes thus attributed to price cap services shall be further apportioned on a cost-causative basis among price cap baskets.

(d) In calculating the ''ΔY'' variable in the formula detailed in paragraph (b) of this section:

(1) The net change in total non-traffic sensitive access costs for all capped services (in all baskets), calculated at base period demand, shall be allocated among the baskets in proportion to each basket's share of total base period non-traffic sensitive minutes of access (both originating and terminating);

(2) The net change in total traffic sensitive access costs for all capped services (in all baskets), calculated at base period demand, shall be allocated among the baskets in proportion to each basket's share of total base period traffic sensitive minutes of access; and

(3) Changes in special access costs in each basket, calculated at base period demand, shall be assigned directly to the baskets in which such costs are incurred.

(e) In calculating the ''w'' variable in the formula detailed in paragraph (b) of this section, the access costs that must be subtracted from the ''R'' variable shall be apportioned among the baskets in a manner that is consistent with the methodology provided in paragraph (d) of this section for calculating the ''ΔY'' in each basket.

(f) The ''w(GNP–PI − X)'' component of the PCI formula shall be employed only in the adjustment made in connection with the annual price cap filing.

(g) The exogenous cost changes and changes in access costs caused by new services subject to price cap regulation must be included in the appropriate PCI calculations under paragraph (b) of this section beginning at the first annual price cap tariff filing following completion of the base period in which they are introduced.

(h) In the event that a price cap tariff becomes effective, which tariff results in an API value (calculated pursuant to § 61.46) that exceeds the currently applicable PCI value, the PCI value shall be adjusted upward to equal the API value.

[54 FR 19842, May 8, 1989, as amended at 55 FR 42383, Oct. 19, 1990]

§ 61.45 Adjustments to the PCI for Local Exchange Carriers.

(a) Local exchange carriers subject to price cap regulation shall file adjustments to the PCI for each basket as part of the annual price cap tariff filing, and shall maintain updated PCIs to reflect the effect of mid-year exogenous cost changes.

(b) Adjustments to local exchange carrier PCIs for the baskets designated in §§ 61.42(d) (2), (3), (4), and (5), shall be made pursuant to the formula set forth in §§ 61.44 (b), and as further explained in §§ 61.44 (e), (f), (g), and (h).

(1) Notwithstanding the value of X defined in § 61.44(b), the X value applicable to the baskets specified in § 61.42(d) (2) and (3) shall be 4.0%, or 4.7%, or 5.3%, as the carrier elects.

(2) For the basket specified in § 61.42(d)(4), the value of X shall be 3.0%, or 3.7%, or 4.3%, as the carrier elects.

(3) Notwithstanding the value of X defined in § 61.44(b), the value of X applicable to the basket specified in § 61.42(d)(5) shall be 0%.

(c) Subject to paragraph (e) of this section, adjustments to local exchange carrier PCIs for the basket designated in § 61.42(d)(1) shall be made pursuant to the following formula:

$$PCI_1 = PCI_{t-1}[1 + w[(GDP\text{–}PI\text{–}X\text{–}(g/2))/(1+(g/2))] + \Delta Z/R]$$

where

GDP–PI=the percentage change in the GDP–PI between the quarter ending six months prior to the effective date of the new annual tariff and the corresponding quarter of the previous year,

X=productivity factor of 4.0%, or 4.7%, or 5.3% if the carrier so elects,

g=the ratio of minutes of use per access line during the base period, to minutes of use per access line during the previous base period, minus 1,

ΔZ=the dollar effect of current regulatory changes when compared to the regulations in effect at the time the PCI was updated to PCI_{t-1}, measured at base period level of operations,

R=base period quantities for each rate element ''i'', multiplied by the price for each rate element ''i'' at the time the PCI was updated to PCI_{t-1},

w=R+ΔZ, all divided by R,

PCI_t=the new PCI value, and

PCI_{t-1}=the immediately preceding PCI value.

(d) The exogenous cost changes represented by the term ''ΔZ'' in the formula detailed in paragraphs (b) and (c) of this section shall be limited to those cost changes that the Commission shall permit or require by rule, rule waiver, or declaratory ruling.

(1) Subject to further order of the Commission, those exogenous changes shall include cost changes caused by:

(i) The completion of the amortization of depreciation reserve deficiencies;

(ii) Such changes in the Uniform System of Accounts, including changes in the Uniform System of Accounts requirements made pursuant to § 32.16 of this chapter, as the Commission shall permit or require be treated as exogenous by rule, rule waiver, or declaratory ruling.

(iii) Changes in the Separations Manual;

(iv) Changes to the level of obligation associated with the Long Term Support Fund and the Transitional Support Fund described in § 69.612;

(v) The reallocation of investment from regulated to nonregulated activities pursuant to § 64.901;

(vi) Such tax law changes and other extraordinary cost changes as the Commission shall permit or require be treated as exogenous by rule, rule waiver, or declaratory ruling.

(vii) Retargeting the PCI to the level specified by the Commission for carriers whose base year earnings are below the level of the lower adjustment mark.

(viii) Inside wire amortizations.

(2) Local exchange carriers specified in § 61.41 (a)(2) or (a)(3) shall also make such temporary exogenous cost changes as may be necessary to reduce PCIs to give full effect to any sharing of base period earnings required by the sharing mechanism set forth in the Commission's Second Report and Order in Common carrier Docket No. 87–313, FCC 90–314, adopted September 19, 1990. Such exogenous cost changes shall include interest, computed at the prescribed rate of return, from the day after the end of the period giving rise to the adjustment, to the midpoint of the period when the adjustment is in effect.

(3) Local exchange carriers specified in § 61.41(a)(2) or (a)(3) of this part shall, in their annual access tariff filing, recognize all exogenous cost changes attributable to modifications during the coming tariff year in the obligations specified in § 61.45(d)(1)(iv) as well as those changes attributable to alterations in their Subscriber Plant Factor and the Dial Equipment Minutes factor, and completions of inside wire amortizations and reserve deficiency amortizations.

(4) Exogenous cost changes shall be apportioned on a cost-causative basis between price cap services as a group, and excluded services as a group. Exogenous cost changes thus attributed to price cap services shall be further apportioned on a cost-causative basis among the price cap baskets.

(e) The ''w[(GDP–PI–X–[g/2))/(1+(g/2))]'' component of the PCI formula contained in paragraph (c) of this section shall be employed only in the adjustment made in connection with the annual price cap filing.

(f) The exogenous costs caused by new services subject to price cap regulation must be included in the appropriate PCI calculations under paragraph (c) of this section beginning at the first annual price cap tariff filing following completion of the base period in which such services are introduced.

(g) In the event that a price cap tariff becomes effective, which tariff results in an API value (calculated pursuant to § 61.46) that exceeds the currently applicable PCI value, the PCI value shall

be adjusted upward to equal the API value.

(h) To the extent a local exchange carrier elects the higher productivity factor, the election must be made in all baskets, except the video dialtone services basket, as designated in § 61.42(d)(5).

[55 FR 42383, Oct. 19, 1990; 55 FR 50558, Dec. 7, 1990, as amended at 56 FR 21617, May 10, 1991; 58 FR 36148, July 6, 1993; 60 FR 19527, Apr. 19, 1995; 60 FR 52346, Oct. 6, 1995]

§ 61.46 Adjustments to the API.

(a) Except as provided in paragraphs (d) and (e) of this section, in connection with any price cap tariff filing proposing rate changes, the carrier must calculate an API for each affected basket pursuant to the following methodology:

$API_t = API_{t-1} [\Sigma_i v_i (P_t/P_{t-1})_i]$

where

API_t = the proposed API value,

API_{t-1} = the existing API value,

P_t = the proposed price for rate element ''i,''

P_{t-1} = the existing price for rate element ''i,'' and

v_i = the current estimated revenue weight for rate element ''i,'' calculated as the ratio of the base period demand for the rate element ''i'' priced at the existing rate, to the base period demand for the entire basket of services priced at existing rates.

(b) New services subject to price cap regulation must be included in the appropriate API calculations under paragraph (a) of this section beginning at the first annual price cap tariff filing following completion of the base period in which they are introduced. This index adjustment requires that the demand for the new service during the base period must be included in determining the weights used in calculating the API.

(c) Any price cap tariff filing proposing rate restructuring shall require an adjustment to the API pursuant to the general methodology described in paragraph (a) of this section. This adjustment requires the conversion of existing rates into rates of equivalent value under the proposed structure, and then the comparison of the existing rates that have been converted to reflect restructuring to the proposed restructured rates. This calculation may require use of carrier data and estimation techniques to assign customers of the preexisting service to those services (including the new restructured service) that will remain or become available after restructuring.

(d) In connection with any price cap tariff proposing changes to rates for services in the basket designated in § 61.42(d)(1), the maximum allowable carrier common line (CCL) charges shall be computed pursuant to the following methodology:

$CCL_{MOU}=CL_{MOU}*$ (1+% change in CL PCI) $- EUCL_{MOU}*$ 1/ (1+(g/2))

where

CCL_{MOU}=The sum of each of the proposed Carrier Common Line rates multiplied by its corresponding base period Carrier Common Line minutes of use, divided by the sum of all types of base period Carrier Common Line minutes of use,

CL_{MOU}=The sum of each of the existing maximum allowable Carrier Common Line rates multiplied by its corresponding base period Carrier Common Line minutes of use plus each existing End User Common Line (EUCL) rate multiplied by its corresponding base period lines, divided by the sum of all types of base period Carrier Common Line minutes of use,

$EUCL_{MOU}$=Proposed End User Line rates multiplied by base period lines and divided by the sum of all types of base period Carrier Common Line minutes of use, and

g=The ratio of minutes of use per access line during the base period to minutes of use per access line during the previous base period, minus 1.

(e) In addition, for the purposes of § 61.46(d), ''Existing Carrier Common Line Rates'' shall include existing originating premium, originating non-premium, terminating premium, and terminating non-premium rates; and ''End User Common Line Rates'' used to calculate the CL_{MOU} and the $EUCL_{MOU}$ factors shall include, but not be limited to, Residential and Single Line Business rates, Multi-Line Business rates, Centrex rates, Limited Pay Telephone Rates, and the Special Access surcharge.

(f) The ''1/(1+(g/2)'' component of the CCL_{MOU} formula contained in paragraph (d) shall be employed only in the

adjustment made in connection with the annual price cap filing.

[54 FR 19843, May 8, 1989, as amended at 55 FR 42383, Oct. 19, 1990; 55 FR 50558, Dec. 7, 1990]

§ 61.47 Adjustments to the SBI; pricing bands.

(a) In connection with any price cap tariff filing proposing changes in the rates of service categories or subcategories, the carrier must calculate an SBI value for each affected service category or subcategory pursuant to the following methodology:

$$SBI_t = SBI_{t-1}[\Sigma_i\ v_i(P_t/P_{t-1})_i]$$

where

SBI_t = the proposed SBI value,

SBI_{t-1} = the existing SBI value,

P_t = the proposed price for rate element ''i,''

P_{t-1} = the existing price for rate element ''i,'' and

v_i = the current estimated revenue weight for rate element ''i,'' calculated as the ratio of the base period demand for the rate element ''i'' priced at the existing rate, to the base period demand for the entire group of rate elements comprising the service category priced at existing rates.

(b) New services that are added to existing service categories or subcategories must be included in the appropriate SBI calculations under paragraph (a) of this section beginning at the first annual price cap tariff filing following completion of the base period in which they are introduced. This index adjustment requires that the demand for the new service during the base period must be included in determining the weights used in calculating the SBI.

(c) In the event that the introduction of a new service requires the creation of a new service category or subcategory, a new SBI must be established for that service category or subcategory beginning at the first annual price cap tariff filing following completion of the base period in which the new service is introduced. The new SBI should be initialized at a value of 100, corresponding to the service category or subcategory rates in effect the last day of the base period, and thereafter should be adjusted as provided in paragraph (a) of this section.

(d) Any price cap tariff filing proposing rate restructuring shall require an adjustment to the affected SBI pursuant to the general methodology described in paragraph (a) of this section. This adjustment requires the conversion of existing rates in the rate element group into rates of equivalent value under the proposed structure, and then the comparison of the existing rates that have been converted to reflect restructuring to the proposed restructured rates. This calculation may require use of carrier data and estimation techniques to assign customers of the preexisting service to those services (including the new restructured service) that will remain or become available after restructuring.

(e) Pricing bands shall be established each tariff year for each service category and subcategory within a basket. Except as provided in paragraphs (f), (g), and (h) of this section, each band shall limit the pricing flexibility of the service category or subcategory, as reflected in the SBI, to an annual increase of five percent or an annual decrease of ten percent, relative to the percentage change in the PCI for that basket, measured from the levels in effect on the last day of the preceding tariff year.

(f) *Dominant interexchange carriers.* (1) The upper pricing bands for the evening MTS and night/weekend MTS service categories shall limit the annual upward pricing flexibility for those service categories, as reflected in their SBIs, to four percent, relative to the percentage change in the PCI for the residential and small business services basket, measured from the last day of the preceding tariff year.

(2) Dominant interexchange carriers subject to price cap regulation shall calculate a composite average rate for services contained in the residential and small business services basket that are purchased by residential customers. Notwithstanding paragraph (f)(1) of this section, the annual upward pricing flexibility for this composite average rate shall be limited to one percent, relative to the percentage change in the PCI for the residential and small business services basket, measured from the last day of the preceding tariff year.

(g)(1) *Local Exchange Carriers—Service categories and subcategories.* Local exchange carriers subject to price cap regulation as that term is defined in § 61.3(w) shall use the methodology set forth in paragraphs (a) through (d) of this section to calculate two separate subindexes: One for the DS1 services offered by such carriers and the other for the DS3 services offered by such carriers. The annual pricing flexibility for each of these two subindexes shall be limited to an annual increase of five percent or an annual decrease of ten percent, relative to the percentage change in the PCI for the special access services basket, measured from the last day of the preceding tariff year.

(2) The upper pricing band for the tandem-switched transport service category shall limit the annual upward pricing flexibility for this service category, as reflected in its SBI, to two percent, relative to the percentage change in the PCI for the trunking basket, measured from the levels in effect on the last day of the preceding tariff year. The lower pricing band for the tandem-switched transport service category shall limit the annual downward pricing flexibility for this service category, as reflected in its SBI, to ten percent, relative to the percentage change in the PCI for the trunking basket, measured from the levels in effect on the last day of the preceding tariff year.

(3) The upper pricing band for the interconnection charge service category shall limit the annual upward pricing flexibility for this service category, as reflected in its SBI, to zero percent, relative to the percentage change in the PCI for the trunking basket, measured from the levels in effect on the last day of the preceding tariff year. There shall be no lower pricing band for the interconnection charge.

(4) Local exchange carriers subject to price cap regulation as that term is defined in § 61.3(v) shall use the methodology set forth in paragraphs (a) through (d) of this section to calculate a separate subindex for the 800 data base vertical features offered by such carriers. The annual pricing flexibility for this subindex shall be limited to an annual increase of five percent or an annual decrease of ten percent, relative to the percentage change in the PCI for the traffic sensitive basket, measured from the last day of the preceding tariff year.

(5) The upper pricing band for the ''Signalling for tandem switching'' service category shall limit the upward pricing flexibility for this service category, as reflected in its SBI, to two percent, relative to the percentage change in the PCI for the trunking basket, measured from the levels in effect on the last day of the preceding tariff year. There shall be no lower pricing band for this service category.

(6) Local exchange carriers subject to price cap regulation as that term is defined in § 61.3 shall use the methodology set forth in paragraphs (a) through (d) of this section to calculate a lower pricing band for the basket described in § 61.42(d)(5). The annual pricing flexibility for this basket, as reflected in the API, shall be limited to an annual decrease of fifteen percent, relative to the percentage change in the PCI for that basket, measured from the last day of the preceding tariff year.

(h) *Local exchange carriers—Density pricing zones.* (1) In addition to the requirements of paragraphs (g)(1) and (g)(2) of this section, those local exchange carriers subject to price cap regulation that have established density pricing zones pursuant to § 69.123 of this chapter shall use the methodology set forth in paragraphs (a) through (d) of this section to calculate separate subindexes in each zone for each of the following groups of services:

(i) DS1 entrance facilities, DS1 direct-trunked transport, DS1 dedicated signalling transport, and DS1 special access services;

(ii) DS3 entrance facilities, DS3 direct-trunked transport, DS3 dedicated signalling transport, and DS3 special access services;

(iii) Voice grade entrance facilities, voice grade direct-trunked transport, and voice grade dedicated signalling transport, and (if the Commission, by order, designates such services as subject to competition) voice grade special access;

(iv) Tandem-switched transport; and

(v) Such other special access services that the Commission may designate by order.

(2) The annual pricing flexibility for each of the subindexes specified in paragraph (h)(1) of this section shall be limited to an annual increase of five percent or an annual decrease of fifteen percent, relative to the percentage change in the PCI for the trunking basket, measured from the levels in effect on the last day of the proceeding tariff year.

[54 FR 19843, May 8, 1989, as amended at 55 FR 42384, Oct. 19, 1990; 56 FR 55239, Oct. 25, 1991; 57 FR 54331, Nov. 18, 1992; 58 FR 7868, Feb. 10, 1993; 58 FR 48762, Sept. 17, 1993; 59 FR 10302, Mar. 4, 1994; 59 FR 32930, June 27, 1994; 60 FR 19528, Apr. 19, 1995; 60 FR 52346, Oct. 6, 1995]

§ 61.48 Transition rules for price cap formula calculations.

(a) Dominant interexchange carriers subject to price cap regulation shall file initial price cap tariffs May 17, 1989, to be effective July 1, 1989.

(b)(1) In connection with the initial price cap tariff filing described in paragraph (a) of this section, each PCI, API, and SBI shall be assigned an initial value prior to adjustment of 100, corresponding to the costs and rates in effect as of December 31, 1988.

(2) The PCI and API for offerings under §61.42(b)(3) shall be assigned a value equal to 100, corresponding to rates in effect as of August 1, 1991. Dominant interexchange carriers subject to price cap regulation shall file new business basket index levels with the first business basket tariff transmittal that is filed subsequent to the effective date of this rule.

(c) Local exchange carriers subject to price cap regulation shall file initial price cap tariffs not later than November 1, 1990, to be effective January 1, 1991.

(d)(1) In connection with the initial price cap filing described in paragraph (c) of this section, each PCI, API, and SBI shall be assigned an initial value prior to adjustment of 100, corresponding to the costs and rates in effect as of July 1, 1990.

(2) Carriers electing price cap regulation under §61.41(a)(3) of this part in a year after 1991 shall file initial price cap tariffs not later than April 2 of the year of election, to be effective on July 1 of the year of election. Each PCI, API, and SBI shall be assigned an initial value prior to adjustment of 100, corresponding to the costs and rates in effect as of January 1 of the year of election.

(e) In connection with the initial price cap filing described in paragraph (c) of this section, initial PCI calculations shall be made without adjustment for any changes in inflation or productivity. Annual price cap filings incorporating the full values of the GNP–PI and productivity offsets will commence April 2, 1991, with a scheduled effective date of July 1, 1991.

(f) Local exchange carriers specified in §61.41(a) (2) or (3) shall, in their initial price cap filings described in paragraph (c) of this section, adjust their PCIs through use of an exogenous cost factor to account for the represcription of the rate of return, effective January 1, 1991.

(g) *Local Transport Restructure—Initial Rates.* Local exchange carriers subject to price cap regulation shall set initial transport rates, as defined in §69.2(tt) of this chapter, according to the requirements set forth in §§69.108, 69.110, 69.111, 69.112, 69.124, and 69.125 of this chapter.

(h) *Local Transport Restructure—Price Cap Transition Rules*—(1) *Definitions.* The following definitions apply for purposes of paragraph (h) of this section:

Effective date is March 4, 1994.

Initial restructured rates are rates that are (or should have been) effective on the transport restructure date;

Revenue weight of a given group of services included in a basket, service category, or subcategory is the ratio of base period demand for the given service rate elements included in the basket, service category, or subcategory priced at initial restructured rates, to the base period demand for the entire group of rate elements comprising the basket, service category, or subcategory priced at initial restructured rates; and

Transport restructure date is the date on which local exchange carriers' initial transport rates, as defined in §69.2(tt) of this chapter, became effective.

(2) *Trunking Basket PCI and API.* (i) On the effective date, the PCI value for the trunking basket, as defined in

§ 61.42(d)(3), shall be computed by multiplying the API value for the special access basket on the day preceding the transport restructure date, by a weighted average of the following:

(A) The ratio of the PCI value that applied to the special access basket on the day preceding the transport restructure date, to the API value that applied to the special access basket on the day preceding the transport restructure date, weighted by the revenue weight of the special access services included in the trunking basket; and

(B) The ratio of the PCI value that applied to the traffic sensitive basket on the day preceding the transport restructure date, to the API value that applied to the traffic sensitive basket on the day preceding the transport restructure date, weighted by the revenue weight of the transport services included in the trunking basket.

(ii) On the effective date, the API value for the trunking basket referred to in § 61.42(e)(2) shall be equal to the API value for the special access basket on the day preceding the transport restructure date.

(3) *Service Category and Subcategory Pricing Bands for Flat-Rated Transport and Special Access.* From the effective date through the end of the tariff year, the following shall govern instead of §§ 61.47(e) and 61.47(g)(1). The pricing bands established for the voice grade and high capacity service categories referred to in §§ 61.42(e)(2)(i) and 61.42(e)(2)(iii) and the DS1 and DS3 service subcategories referred to in §§ 61.42(e)(2)(iii)(A) and 61.42(e)(2)(iii)(B), shall limit the pricing flexibility of the service category or subcategory, as reflected in its SBI, as follows:

(i) The upper pricing band shall be a weighted average of the following:

(A) The upper pricing band that applied to the special access services included in the category or subcategory on the day preceding the transport restructure date, weighted by the revenue weight of the special access services included in the category or subcategory; and

(B) 1.05 times the SBI value for the special access services included in the category or subcategory on the day preceding the transport restructure date, weighted by the revenue weight of the transport services included in the category or subcategory.

(ii) The lower pricing band shall be a weighted average of the following:

(A) The lower pricing band that applied to the special access services included in the category or subcategory on the day preceding the transport restructure date, weighted by the revenue weight of the special access services included in the category or subcategory; and

(B) 0.90 times the SBI value for the special access services included in the category or subcategory on the day preceding the transport restructure date, weighted by the revenue weight of the transport services included in the category or subcategory.

(iii) On the effective date, the SBI value for the category or subcategory shall be equal to the SBI value for the corresponding special access category or subcategory on the day preceding the effective date.

(4) *Tandem-Switched Transport and Interconnection Charge SBIs.* On the effective date, the SBIs for the tandem-switched transport and interconnection charge service categories defined in § 61.42(e)(2) (v) and (vi) shall be assigned an initial value prior to adjustment of 100, corresponding to the initial restructured rates in those categories.

(5) *Tandem-Switched Transport and Interconnection Charge Service Category Pricing Bands.* From the effective date through the end of the tariff year, the following shall govern instead of § 61.47 (g)(2) and (g)(3):

(i) The upper pricing band for the tandem-switched transport service category shall limit the upward pricing flexibility for this service category, as reflected in its SBI, to two percent, measured from the initial restructured rates for tandem-switched transport. The lower pricing band for the tandem-switched transport service category shall limit the downward pricing flexibility for this service category, as reflected in its SBI, to ten percent, measured from the initial restructured rates for tandem-switched transport.

(ii) The upper pricing band for the interconnection charge service category shall limit the upward pricing flexibility for this service category, as

reflected in its SBI, to zero percent, measured from the initial restructured rate for the interconnection charge.

(i) *Transport and Special Access Density Pricing Zone Transition Rules*—(1) *Definitions.* The following definitions apply for purposes of paragraph (i) of this section:

Earlier date is the earlier of the special access zone date and the transport zone date.

Earlier service is special access if the special access zone date precedes the transport zone date, and is transport if the transport zone date precedes the special access zone date.

Later date is the later of the special access zone date and the transport zone date.

Later service is transport if the special access zone date precedes the transport zone date, and is special access if the transport zone date precedes the special access zone date.

Revenue weight of a given group of services included in a zone category is the ratio of base period demand for the given service rate elements included in the category priced at existing rates, to the base period demand for the entire group of rate elements comprising the category priced at existing rates.

Special access zone date is the date on which a local exchange carrier tariff establishing divergent special access rates in different zones, as described in § 69.123(c) of this chapter, becomes effective.

Transport zone date is the date on which a local exchange carrier tariff establishing divergent switched transport rates in different zones, as described in § 69.123(d) of this chapter, becomes effective.

(2) *Simultaneous Introduction of Special Access and Transport Zones.* Local exchange carriers subject to price cap regulation that have established density pricing zones pursuant to § 69.123 of this chapter, and whose special access zone date and transport zone date occur on the same date, shall initially establish density pricing zone SBIs and bands pursuant to the methodology in § 61.47(h).

(3) *Sequential Introduction of Zones in the Same Tariff Year.* Notwithstanding § 61.47(h), local exchange carriers subject to price cap regulation that have established density pricing zones pursuant to § 69.123 of this chapter, and whose special access zone date and transport zone date occur on different dates during the same tariff year, shall, on the earlier date, establish density pricing zone SBIs and pricing bands using the methodology described in § 61.47(h), but applicable to the earlier service only. On the later date, such carriers shall recalculate the SBIs and pricing bands to limit the pricing flexibility of the services included in each density pricing zone category, as reflected in its SBI, as follows:

(i) The upper pricing band shall be a weighted average of the following:

(A) The upper pricing band that applied to the earlier services included in the zone category on the day preceding the later date, weighted by the revenue weight of the earlier services included in the zone category; and

(B) 1.05 times the SBI value for the services included in the zone category on the day preceding the later date, weighted by the revenue weight of the later services included in the zone category.

(ii) The lower pricing band shall be a weighted average of the following:

(A) The lower pricing band that applied to the earlier services included in the zone category on the day preceding the later date, weighted by the revenue weight of the earlier services included in the zone category; and

(B) 0.85 times the SBI value for the services included in the zone category on the day preceding the later date, weighted by the revenue weight of the later services included in the zone category.

(iii) On the later date, the SBI value for the zone category shall be equal to the SBI value for the category on the day preceding the later date.

(4) *Introduction of Zones in Different Tariff Years.* Notwithstanding § 61.47(h), those local exchange carriers subject to price cap regulation that have established density pricing zones pursuant to § 69.123 of this chapter, and whose special access zone date and transport zone date do not occur within the same tariff year, shall, on the earlier date, establish density pricing zone SBIs and pricing bands using the methodology

described in §61.47(h), but applicable to the earlier service only.

(i) On the later date, such carriers shall use the methodology set forth in paragraphs (a) through (d) of §61.47 to calculate separate SBIs in each zone for each of the following groups of services:

(A) DS1 special access services;

(B) DS3 special access services;

(C) DS1 entrance facilities, DS1 direct-trunked transport, and DS1 dedicated signalling transport;

(D) DS3 entrance facilities, DS3 direct-trunked transport, and DS3 dedicated signalling transport;

(E) Voice grade entrance facilities, voice grade direct-trunked transport, and voice grade dedicated signalling transport;

(F) Tandem-switched transport; and

(G) Such other special access services as the Commission may designate by order.

(ii) From the later date through the end of the following tariff year, the annual pricing flexibility for each of the subindexes specified in paragraph (i)(4)(i) of this section shall be limited to an annual increase of five percent or an annual decrease of fifteen percent, relative to the percentage change in the PCI for the trunking basket, measured from the levels in effect on the last day of the tariff year preceding the tariff year in which the later date occurs.

(iii) On the first day of the second tariff year following the tariff year during which the later date occurs, the local exchange carriers to which this paragraph applies shall establish the separate subindexes provided in §61.47(h)(1), and shall set the initial SBIs for those density pricing zone categories that are combined (specified in paragraphs (i)(4)(i)(A) and (i)(4)(i)(C), (i)(4)(i)(B) and (i)(4)(i)(D), and (i)(4)(i)(E) and (i)(4)(i)(G) of this section) by computing the weighted averages of the SBIs that applied to the formerly separate zone categories, weighted by the revenue weights of the respective services included in the zone categories.

(j) *Video Dialtone Services.* For local exchange carriers subject to price cap regulation, the video dialtone services basket, as designated in §61.42(d)(5), shall be established with an initial PCI and API level of 100 in the first annual price cap tariff filing following competition of the base period in which the initial video dialtone service was introduced. The initial value of 100 for the PCI and API for video dialtone service prior to adjustment of inflation and productivity shall correspond to the rates in effect just prior to the effective date of the annual filing in which rates for video dialtone service are initially included in the video dialtone basket.

[54 FR 19843, May 8, 1989, as amended at 55 FR 42384, Oct. 19, 1990; 56 FR 21617, May 10, 1991; 56 FR 55239, Oct. 25, 1991; 59 FR 10302, Mar. 4, 1994; 60 FR 19528, Apr. 19, 1995; 60 FR 52346, Oct. 6, 1995]

§61.49 Supporting information to be submitted with letters of transmittal for tariffs of carriers subject to price cap regulation.

(a) Each price cap tariff filing must be accompanied by supporting materials sufficient to calculate required adjustments to each PCI, API, and SBI pursuant to the methodologies provided in §§61.44, 61.45, 61.46, and 61.47, as applicable

(b) Each price cap tariff filing that proposes rates that are within applicable bands established pursuant to §61.47, and that results in an API value that is equal to or less than the applicable PCI value, must be accompanied by supporting materials sufficient to establish compliance with the applicable bands, and to calculate the necessary adjustment to the affected APIs and SBIs pursuant to §§61.46 and 61.47, respectively.

(c) Each price cap tariff filing that proposes rates above the applicable band limits established in §§61.47(e), (f)(1), (g), and (h) or above the limit on composite average residential rates established in §61.47(f)(2), must be accompanied by supporting materials establishing substantial cause for the proposed rates.

(d) Each price cap filing that proposes service category rates below applicable band limits established in §61.47(e), (g), and (h) of this part, must be accompanied by supporting materials establishing that the rates cover the service category's average variable

cost, or equivalently, that the service category's net additional revenue resulting from the price change exceeds additional costs.

(e) Each price cap tariff filing that proposes rates that will result in an API value that exceeds the applicable PCI value must be accompanied by:

(1) An explanation of the manner in which all costs have been allocated among baskets; and

(2) Within the affected basket, a cost assignment slowing down to the lowest possible level of disaggregation, including a detailed explanation of the reasons for the prices of all rate elements to which costs are not assigned.

(f) Each price cap tariff filing that proposes restructuring of existing rates must be accompanied by supporting materials sufficient to make the adjustments to each affected API and SBI required by §§61.46(c) and 61.47(d), respectively.

(g)(1) Each tariff filing by a dominant interexchange carrier, as specified by Commission order, that introduces a new service that will later be included in a basket must be accompanied by cost data sufficient to establish that the new service, and each unbundled element thereof, will generate a net revenue increase—measured against revenues generated from all services subject to price cap regulation, and calculated based upon present value—within the lesser of a 24-month period after an annual price cap tariff including the new service takes effect, or 36 months from the date the new service becomes effective. Each carrier making such a tariff filing must, at the time the new service is incorporated into the price cap index, submit data sufficient to make the API and PCI calculations required by §§61.46(b) and 61.44(c) of this part, and, as necessary, to make the SBI calculations provided in §61.47 (b) or (c) of this part.

(2) Each tariff filing submitted by a local exchange carrier specified in §61.41(a) (2) or (3) of this part that introduces a new service or a restructured unbundled basic service element (BSE) (as BSE is defined in §69.2 (mm)) that is or will later be included in a basket must be accompanied by cost data sufficient to establish that the new service or unbundled BSE will not recover more than a reasonable portion of the carrier's overhead costs.

(h) Each tariff filing by a local exchange carrier subject to price cap regulation that introduces a new service or a restructured unbundled basis service element (BSE), as defined in §69.2(mm) of this chapter, that is or will later be included in a basket, or that introduces or changes the rates for connection charge subelments for expanded interconnection, as defined in §69.121 of this chapter, must also be accompanied by:

(1) The following, including complete explanations of the bases for the estimates.

(i) A study containing a projection of costs for a representative 12 month period; and

(ii) Estimates of the effect of the new tariff on the traffic and revenues from the service to which the new tariff applies, the carrier's other service classifications, and the carrier's overall traffic and revenues. These estimates must include the projected effects on the traffic and revenues for the same representative 12 month period used in paragraph (h)(1)(i) of this section.

(2) *Working papers and statistical data.* (i) Concurrently with the filing of any tariff change or tariff filing for a service not previously offered, the Chief, Tariff Review Branch must be provided two sets of working papers containing the information underlying the data supplied in response to paragraph (h)(1) of this section, and a clear explanation of how the working papers relate to that information.

(ii) All statistical studies must be submitted and supported in the form prescribed in §1.363 of the Commission's rules.

(i) Each tariff filing submitted by a local exchange carrier subject to price cap regulation that introduces or changes the rates for connection charge subelements for expanded interconnection, as defined in §69.121 of this chapter, must be accompanied by cost data sufficient to establish that such charges will not recover more than a just and reasonable portion of the carrier's overhead costs.

(j) For a tariff filing that introduces or changes a contribution charge for

special access and expanded interconnection, as defined in §69.122 of this chapter, the carrier must submit information sufficient to establish that the charge has been calculated in a manner that complies with the Commission order authorizing the contribution charge.

(k) For a tariff that introduces a system of density pricing zones, as described in §69.123 of this chapter, the carrier must, before filing its tariff, submit a density pricing zone plan including, *inter alia*, documentation sufficient to establish that the system of zones reasonably reflects cost-related characteristics, such as the density of total interstate traffic in central offices located in the respective zones, and receive approval of its proposed plan.

[54 FR 19843, May 8, 1989, as amended at 55 FR 42384, Oct. 19, 1990; 56 FR 5956, Feb. 14, 1991; 56 FR 21617, May 10, 1991; 56 FR 33880, July 24, 1991; 57 FR 37730, Aug. 20, 1992; 57 FR 54331, Nov. 18, 1992; 58 FR 17167, Apr. 1, 1993; 58 FR 38536, July 19, 1993; 58 FR 48762, Sept. 17, 1993; 59 FR 10304, Mar. 4, 1994]

§61.50 Scope: Optional incentive regulation for rate of return local exchange carriers.

(a) This section shall apply on an elective basis, to local exchange carriers for either traffic sensitive rates only or for both traffic sensitive and common line rates. Carriers electing the plan for traffic sensitive rates only must participate in the Association common line pool. Affiliation with average schedule companies shall not bar a carrier from electing optional incentive regulation provided the carrier is otherwise eligible.

(b) If a telephone company, or any one of a group of affiliated telephone companies, files an optional incentive regulation tariff in one study area, that telephone company and its affiliates, except its average schedule affiliates, must file incentive plan tariffs in all their study areas.

(c) The following rules apply to telephone companies subject to this section, that become involved in mergers, acquisitions, or similar transactions, except that mergers with, acquisitions by, or other similar transactions with companies subject to price cap regulation, as that term is defined in §61.3(w), shall be governed by §61.41(c).

(1) Any telephone company subject to this section that is a party to a merger, acquisition, or similar transaction, shall continue to be subject to incentive regulation notwithstanding such transaction.

(2) Where a telephone company subject to this section acquires, is acquired by, merged with, or otherwise becomes affiliated with a telephone company that is not subject to this section, the latter telephone company shall become subject to optional incentive plan regulation no later than one year following the effective date of such merger, acquisition, or similar transaction and shall accordingly file optional incentive plan tariffs to be effective no later than that date in accordance with the applicable provisions of this part 61.

(3) Notwithstanding the provisions of paragraph (c)(2) of this section, when a telephone company subject to optional incentive plan regulation acquires, is acquired by, mergers with, or otherwise becomes affiliated with a telephone company that qualifies as an ''average schedule'' company, the latter company may retain its ''average schedule'' status or become subject to optional incentive plan regulations in accordance with §69.3(i)(3) of this chapter and the requirements referenced in that section.

(d) Local exchange carriers that are subject to this section shall not withdraw from optional incentive regulation until the end of two, two-year tariff periods. If a local exchange carrier withdraws from optional incentive plan regulation, it must file company-specific tariffs under the provisions of §61.38 for four years before it may again elect to enter incentive plan regulation; such carrier may not participate in the applicable Association tariff during that four years. After the four year period, the carrier may either return to the incentive plan, or remain under §61.38.

(e) Each local exchange carrier subject to this section shall establish the baskets of services, including service categories, as identified in §61.42 (d) and (e).

(f) Each local exchange carrier subject to optional incentive regulation shall exclude from its baskets such services or portions of such services as the Commission has designated or may hereafter designate by order.

(g) New services, other than those within the scope of paragraph (f) of this section, must be included in the affected basket at the first two-year tariff filing following completion of the two-year tariff period in which they are introduced. To the extent that such new services are permitted or required to be included in new or existing service categories within the assigned basket, they shall be so included at the first two-year tariff filing following completion of the two-year tariff period in which they are introduced.

(h)(1) Except as provided in paragraph (c)(4) of this section, in connection with any optional incentive plan tariff filings proposing rate changes, the carrier must calculate an index for each affected basket as determined by the Common Carrier Bureau.

(2) In connection with any tariff filed under this section proposing changes to rates for services in the basket designated in paragraph (e) of this section, the maximum allowable increase or decrease in a basket shall be limited to ten percent over the two-year tariff period.

(i) Rates for a new service that is the same as that offered by a price cap regulated local exchange carrier providing service in an adjacent serving area are deemed presumptively lawful, if the proposed rates, in the aggregate, are no greater than the rate established by the price cap local exchange carrier. Tariff filings made pursuant to this paragraph must include the following:

(1) A brief explanation of why the service is like an existing service offered by a geographically adjacent price cap regulated local exchange carrier; and

(2) Data to establish compliance with this subsection that, in aggregate, the proposed rates for the new service are no greater than those in effect for the same or comparable service offered by that same geographically adjacent price cap regulated local exchange carrier.

(j) The maximum allowable rate of return on earnings based on rates filed by a local exchange carrier subject to this section, shall be determined by adding a fixed increment of one and one-half percent to the carrier's prescribed rate of return. Rates of local exchange carriers subject to this section that result in earnings less than three-quarters percent below the carrier's prescribed rate of return may be retargeted to three-quarters percent below the carrier's prescribed rate of return, in a mid-course tariff filing.

(k) Local exchange carriers filing common line rates under this section must propose Carrier Common Line rates based on the following:

(1) For the first period the Carrier Common Line revenue requirement shall be determined by a cost of service study for the most recent 12 month period. The Carrier Common Line revenue requirement shall be divided by a factor equal to the demand over the preceding 12-month period, multiplied by the ratio of Carrier Common Line minutes of use during the most recent 12-month period over Carrier Common Line minutes of use in the preceding 12-month period.

(2) For subsequent filings, the Carrier Common Line revenue requirement shall be determined by a cost of service study for the total period since the carrier's last biennial access filing. The Carrier Common Line revenue requirement determined in this manner shall be divided by a factor equal to the demand over the preceding 12-month period, multiplied by the ratio of Carrier Common Line minutes of use during the most recent 12-month period over Carrier Common Line minutes of use in the preceding 12-month period.

[58 FR 36148, July 6, 1993]

SPECIFIC RULES FOR TARIFF PUBLICATIONS

§ 61.52 Form, size, type, legibility, etc.

(a) All tariff publications must be in loose-leaf form of size A4 (21 cm x 29.7 cm) or 8.5 x 11 inches (21.6 cm x 27.9 cm), and must be plainly printed in black print on white paper of durable quality. Less than 6-point type may not be used. Erasures or alterations in writing must not be made in any tariff

publication filed with the Commission or in those copies posted for public convenience. A margin of no less than 2.5 cm (1 inch) in width must be allowed at the left edge of every tariff publication.

(b) Pages of tariffs must be printed on one side only, and must be numbered consecutively and designated as ''Original title page,'' ''Original page 1,'' ''Original page 2,'' etc.

(1) All such pages must show, in the upper left-hand corner the name of the issuing carrier; in the upper right-hand corner the FCC number of the tariff, with the page designation directly below; in the lower left-hand corner the issued date; in the lower right-hand corner the effective date; and at the bottom, center, the street address of the issuing officer. The carrier must also specify the issuing officer's title either at the bottom center of all tariff pages, or on the title page and check sheet only.

(2) As an alternative, the issuing carrier may show in the upper left-hand corner the name of the issuing carrier, the title and street address of the issuing officer, and the issued date; and in the upper right-hand corner the FCC number of the tariff, with the page designation directly below, and the effective date. The carrier must specify the issuing officer's title in the upper left-hand corner of either all tariff pages, or on the title page and check sheet only. A carrier electing to place the information at the top of the page should annotate the bottom of each page to indicate the end of the material, e.g., a line, or the term ''Printed in USA,'' or ''End''.

(3) Only one format may be employed in a tariff publication.

[49 FR 40869, Oct. 18, 1984, as amended at 58 FR 44906, Aug. 25, 1993]

§61.53 Consecutive numbering.

Carriers should file tariff publications under consecutive FCC numbers. If this cannot be done, a memorandum containing an explanation of the missing number or numbers must be submitted. Supplements to a tariff must be numbered consecutively in a separate series.

§61.54 Composition of tariffs.

(a) Tariffs must contain in consecutive order: A title page; check sheet; table of contents; list of concurring, connecting, and other participating carriers; explanation of symbols and abbreviations; application of tariff; general rules (including definitions), regulations, exceptions and conditions; and rates. If the issuing carrier elects to add a section assisting in the use of the tariff, it should be placed immediately after the table of contents.

(b) The title page of every tariff and supplement must show:

(1) *FCC number, indication of cancellations.* In the upper right-hand corner, the designation of the tariff or supplement as ''FCC No. ———,'' or ''Supplement No. ——— to FCC No. ———,'' and immediately below, the FCC number or numbers of tariffs or supplements cancelled thereby.

(2) *Name of carrier, class of service, geographical application, means of transmission.* The exact name of the carrier, and such other information as may be necessary to identify the carrier issuing the tariff publication; a brief statement showing each class of service provided; the geographical application; and the type of facilities used to provide service.

(3) *Expiration Date.* When the entire tariff or supplement is to expire with a fixed date, the expiration date must be shown in connection with the effective date in the following manner:

Expires at the end of ——————— (date) unless sooner canceled, changed or extended.

(4) *Title and address of issuing officer.* The title and street address of the officer issuing the tariff or supplement in the format specified in §61.52.

(5) *Revised title page.* When a revised title page is issued, the following notation must be shown in connection with its effective date:

Original tariff effective ——————— (here show the effective date of the original tariff).

(c)(1) The page immediately following the title page must be designated as ''Original page 1'' and captioned ''Check Sheet.'' When the original tariff is filed, the check sheet must show

the number of pages contained in the tariff. For example, ''Page 1 to 150, inclusive, of this tariff are effective as of the date shown.'' When new pages are added, they must be numbered in continuing sequence, and designated as ''Original page ——— .'' For example, when the original tariff filed has 150 pages, the first page added after page 150 is to be designated as ''Original page 151,'' and the foregoing notation must be revised to include the added pages.

(2) If pages are to be inserted between numbered pages, each such page must be designated as an original page and must bear the number of the immediately preceding page followed by an alpha or numeric suffix. For example, when two new pages are to be inserted between pages 44 and 45 of the tariff, the first inserted page must be designated as Original page 44A or 44.1 and the second inserted page as Original page 44B or 44.2. Issuing carriers may not utilize both the alpha and numeric systems in the same publication.

(3) When pages are revised, when new pages (including pages with letter or numeric suffix as set forth above) are added to the tariff, or when supplements are issued, the check sheet must be revised accordingly. Revised check sheets must indicate with an asterisk the specific pages added or revised. In addition to the notation in (1), the check sheet must list, under the heading ''The original and revised pages named below (and Supplement No. ———) contain all changes from the original tariff that are in effect on the date shown,'' all original pages in numerical order that have been added to the tariff and the pages which have been revised, including the revision number. For example:

Page	Number of revision except as indicated
Title	1st
1	*8th
3	5th
5A	*Orig.
10	*8th
151	Orig.

*New or Revised page.

(4) Changes in, and additions to tariffs must be made by reprinting the page upon which a change or addition is made. Such changed page is to be designated as a revised page, cancelling the page which it amends. For example, ''First revised page 1 cancels original page 1,'' or ''Second revised page 2 cancels first revised page 2,'' etc. When a revised page omits rates or regulations previously published on the page which it cancels, but such rates or regulations are published on another page, the revised page must make specific reference to the page on which the rates or regulations will be found. This reference must be accomplished by inserting a sentence at the bottom of the revised page that states ''Certain rates (or regulations) previously found on this page can now be found on page ———.'' In addition, the page on which the omitted material now appears must bear the appropriate symbol opposite such material, and make specific reference to the page from which the rates or regulations were transferred. This reference must be accomplished by inserting a sentence at the bottom of the other page that states ''Certain rates (or regulations) on this page formerly appeared on page ———.''

(5) Rejected pages must be treated as indicated in § 61.69.

(d) *Table of contents.* The table of contents must contain a full and complete statement showing the exact location and specifying the page or section and page numbers, where information by subjects under general headings will be found. If a tariff contains so small a volume of matter that its title page or its interior arrangement plainly discloses its contents, the table of contents may be omitted.

(e) *Tariff User's guide.* At its option, a carrier may include a section explaining how to use the tariff.

(f) *List of concurring carriers.* This list must contain the exact name or names of carriers concurring in the tariff, alphabetically arranged, and the name of the city or town in which the principal office of every such carrier is located. If there are no concurring carriers, then the statement ''no concurring carriers'' must be made at the place where the names of the concurring carriers would otherwise appear. If the concurring carriers are numerous, their names may be stated in alphabetical

order in a separate tariff filed with the Commission by the issuing carrier. Specific reference to such separate tariff by FCC number must be made in the tariff at the place where such names would otherwise appear.

(g) *List of connecting carriers.* This list must contain the exact name or names of connecting carriers, alphabetically arranged, for which rates or regulations are published in the tariff, and the name of the city or town in which the principal office of every such carrier is located. If there are no connecting carriers, then the statement ''no connecting carriers'' must be made at the place where their names would otherwise appear. If connecting carriers are numerous, their names may be stated in alphabetical order in a separate tariff filed with the Commission by the issuing carrier. Specific reference to such separate tariff by FCC number must be made in the tariff at the place where such names would otherwise appear.

(h) *List of other participating carriers.* This list must contain the exact name of every other carrier subject to the Act engaging or participating in the communication service to which the tariff or supplement applies, together with the name of the city or town in which the principal office of such carrier is located. If there is no such other carrier, then the statement ''no participating carriers'' must be made at the place where the names of such other carriers would otherwise appear. If such other carriers are numerous, their names may be stated in alphabetical order in a separate tariff filed with the Commission by the issuing carrier. Specific reference must be made in the tariff at the place where such names would otherwise appear. The names of concurring and connecting carriers properly listed in a tariff published by any other participating carrier need not be repeated in this list.

(i)(1) *Symbols, reference marks, abbreviations.* The tariff must contain an explanation of symbols, reference marks, and abbreviations of technical terms used. The following symbols used in tariffs are reserved for the purposes indicated below:

R to signify reduction.
I to signify increase.
C to signify changed regulation.
T to signify a change in text but no change in rate or regulation.
S to signify reissued matter.
M to signify matter relocated without change.
N to signify new rate or regulation.
D to signify discontinued rate or regulation.
Z to signify a correction.

(2) The uniform symbols must be used as follows.

(i) When a change of the same character is made in all or in substantially all matter in a tariff, it may be indicated at the top of the title page of the tariff or at the top of each affected page, in the following manner: ''All rates in this tariff are increases,'' or, ''All rates on this page are reductions, except as otherwise indicated.''

(ii) When a change of the same character is made in all or substantially all matters on a page or supplement, it may be indiated at the top of the page or supplement in the following manner: All rates on this page (or supplement) are increases,'' or, ''All rates on this page (or supplement) are reductions except as otherwise indicated.''

(3) Items which have not been in effect 30 days when brought forward on revised pages must be shown as reissued, in the manner prescribed in § 61.54(i)(1). Items which have been in effect 30 days or more and are brought forward without change on revised pages must not be shown as reissued items.

(j) *Rates and general rules, regulations, exceptions and conditions.* The general rules (including definitions), regulations, exceptions, and conditions which govern the tariff must be stated clearly and definitely. All general rules, regulations, exceptions or conditions which in any way affect the rates named in the tariff must be specified. A special rule, regulation, exception or condition affecting a particular item or rate must be specifically referred to in connection with such item or rate. Rates must be expressed in United States currency, per chargeable unit of service for all communication services, together with a list of all points of service to and from which the rates apply. They must be arranged in a simple and systematic manner. Complicated or ambiguous terminology may not be

used, and no rate, rule, regulation, exception or condition shall be included which in any way attempts to substitute a rate, rule, regulation, exception or condition named in any other tariff.

§ 61.55 Contract-based tariffs.

(a) *Scope.* This section shall apply to offerings as defined in § 61.3(m).

(b) Composition of contract-based tariffs shall comply with § 61.54(b) through (i).

(c) Contract-based tariffs shall include the following:

(1) The term of the contract, including any renewal options;

(2) A brief description of each of the services provided under the contract;

(3) Minimum volume commitments for each service;

(4) The contract price for each service or services at the volume levels committed to by the customers;

(5) A general description of any volume discounts built into the contract rate structure; and

(6) A general description of other classifications, practices and regulations affecting the contract rate.

(d) Contract-based tariffs of an interexchange carrier subject to price cap regulation shall not include services included in §§ 61.42(b), 61.42 (c)(1), (c)(4), and 61.42(c)(10).

[56 FR 55239, Oct. 25, 1991]

§ 61.56 Supplements.

A carrier may not file a supplement except to suspend or cancel a tariff publication.

§ 61.57 Cancellations.

The following paragraphs govern the cancellation of tariffs and supplements.

(a) *By tariff or supplement.* A carrier may cancel any tariff or supplement in whole or in part by another tariff or supplement. Cancellation of a tariff automatically cancels every supplement to that tariff, except a cancelling supplement.

(b) *By expiration.* Subject to § 61.59, a carrier may cancel a tariff or supplement in whole or in part by fixing a date on which the rates or regulations will expire.

(c) *Indication of.* (1) A carrier which cancels a tariff or supplement in whole by another tariff or supplement must comply with § 61.54(b)(1). Cancellation of tariffs or supplements in whole by expiration must be indicated as provided in § 61.54(b)(3).

(2) Where a carrier issues a tariff, supplement, or revised page partially cancelling another tariff, supplement, or revised page, it must specifically state what portion of the other tariff publication is cancelled. Such other tariff or supplement must at the same time be correspondingly amended, effective on the same date.

(3) When only a part of tariff or supplement is to expire, a carrier must show the expiration date on the same page, and associate it with the matter which is to expire. Changes in expiration date must be made pursuant to the notice requirements of § 61.58, unless otherwise authorized by the Commission. Expirations must be indicated as follows:

Expires at the end of _____ (date) unless sooner cancelled, changed or extended.

(d) *Rates and regulations to apply.* When a carrier cancels a tariff or supplement in whole or in part by another tariff or supplement, the cancelling publication must show where all rates and regulations will be found, or what rates and regulations will apply.

(e) *Omissions.* When a tariff or supplement cancelling a previous tariff or supplement omits points of origin or destination, rates or regulations, or routes, which were contained in such tariff or supplement, the new tariff or supplement must indicate the omission in the manner prescribed in paragraph (c) of this section. If such omissions effect changes in rates of regulations, that fact must be indicated by the use of the uniform symbols prescribed in § 61.54(i)(1).

(f) *Carriers ceasing operations.* When a carrier ceases operations without a successor, it must cancel its tariffs pursuant to the notice requirements of § 61.58, unless otherwise authorized by the Commission.

§61.58 Notice requirements.

(a) Every proposed tariff filing must bear an effective date and, except as otherwise provided by regulation, special permission, or Commission order, must be made on at least the number of days notice specified in this section.

(1) Notice is accomplished by filing the proposed tariff changes with the Commission. Any period of notice specified in this section begins on and includes the date the tariff is received by the Commission, but does not include the effective date. If a tariff filing proposes changes governed by more than one of the notice periods listed below, the longest notice period will apply. In computing the notice period required, all days including Sundays and holidays must be counted.

(2) The Chief, Common Carrier Bureau, may require the deferral of the effective date of any tariff filing made on less than 120 days' notice, so as to provide for a maximum total of 120 days' notice, or of such other maximum period of notice permitted by section 203(b) of the Communications Act, regardless of whether petitions under §1.773 of the Commission's Rules have been filed.

(3) Tariff filings proposing corrections must be made on at least 3 days' notice, and may be filed notwithstanding the provisions of §61.59. Corrections to tariff materials not yet effective cannot take effect before the effective date of the original material.

(4) This subsection applies only to dominant carriers. If the tariff publication would increase any rate or charge, or would effectuate and authorized discountinuance, reduction or other impairment of service to any customer, the offering carrier must inform the affected customers of the content of the tariff publication. Such notification should be made in a form appropriate to the circumstance, and may include written notification, personal contact, or advertising in newspapers of general circulation.

(b) *Non-dominant carriers.* Tariff filings of non-dominant carriers must be made on at least 14 days' notice.

(c) *Carriers subject to price cap regulation.* This paragraph applies only to carriers subject to price cap regulation. Such carriers must file tariffs according to the following notice periods.

(1) For annual adjustments to the PCI, API, and SBI values under §§61.44, 61.46, and 61.47, respectively, dominant interexchange carrier filings must be made on at least 45 days' notice. For annual adjustments to the PCI, API, and SBI values under §§61.45, 61.46, and 61.47, respectively, local exchange carrier tariff filings must be made on not less than 90 days' notice.

(2) Tariff filings that do not cause any API to exceed any applicable PCI pursuant to calculations provided for in §61.46 of this part, and that do not cause any SBI to exceed its banding limitations established in §61.47 of this part, must be made on at least 14 days' notice, provided that the tariff filing is restricted to one or more of the following changes to the tariff:

(i) Alters only a rate level;

(ii) Adds a geographic location;

(iii) Eliminates a rate element; or

(iv) Changes the number or size of taper points in a volume discount plan without changing the initial volume quantity associated with the lowest discount level or the highest volume quantity associated with the highest discount level.

(3) Tariff filings that will cause any API to exceed its applicable PCI pursuant to calculations provided for in §61.46 of this part, that will cause any SBI to exceed its upper banding limitations established in §§61.47(e), (f)(1), (g), and (h) of this part, or that will cause the composite average residential rate to exceed its limitation on upward pricing flexibility established in §61.47(f)(2) of this part, must be made on at least 120 days' notice, or such other maximum period of notice permitted by section 203(b) of the Communications Act, regardless of whether petitions under §1.773 of the Commission's Rules have been filed.

(4) Tariff filings that will cause any SBI to decrease below its lower banding limit established in §61.47(e), (g), and (h), must be made on at least 45 days' notice.

(5) Tariff filings involving a change in rate structure of a service included in a basket listed in §61.42(a) or §61.42(d), or the introduction of a new service within the scope of §61.42(g),

must be made on at least 45 days' notice.

(6) Tariff filings involving services included in § 61.42(c), except for services included in § 61.42 (c)(1), (c)(4), and (c)(10), must be made on at least 14 days notice.

(7) The required notice for services included in § 61.42 (c)(1), (c)(4), and (c)(10), tariff filings involving services included in § 61.42(f), or tariff filings involving changes in tariff regulations, other than tariff regulations for services described in paragraph (c)(6), shall be that required in connection with such filings by dominant carriers that are not subject to price cap regulation.

(d) *Other carriers.* (1) Tariff filings in the instances specified in paragraphs (d)(1) (i), (ii), and (iii) of this section must be made on at least 15 days' notice.

(i) Tariffs filed in the first instance by new carriers.

(ii) Tariffs filings involving new rates and regulations not previously filed at, from, to or via points on new lines; at, from to or via new radio facilities; or for new points of radio communication.

(iii) Tariff filings involving a change in the name of a carrier, a change in Vertical and Horizontal coordinates (or other means used to determine airline mileages), a change in the lists of mileages, a change in the lists of connecting, concurring or other participating carriers, text changes, or the imposition of termination charges calculated from effective tariff provisions. The imposition of termination charges does not include the initial filing of termination liability provisions.

(2) Tariff filings involving a change in rate structure, a new service offering, or a rate increase must be made on at least 45 days' notice.

(3) All tariff filings not specifically assigned a different period of public notice in this part must be made on at least 35 days' notice.

(e) *Carriers subject to optional incentive regulation.* Paragraph (e) of this section applies only to carriers subject to § 61.50. Such carriers must file tariffs according to the following notice periods:

(1) For initial and renewal tariff filings whose effective date coincides with the start of any two-year tariff period as defined in § 69.3(f) of this chapter, filings must be made on not less than 90 days' notice.

(2) For rate revisions made pursuant to § 61.50 (g) and (i), and § 61.39(d), tariff filings must be made on not less than 14 days' notice.

[49 FR 40869, Oct. 18, 1984, as amended at 54 FR 19844, May 8, 1989; 55 FR 42384, Oct. 19, 1990; 56 FR 1500, Jan. 15, 1991; 56 FR 5956, Feb. 14, 1991; 56 FR 55239, Oct. 25, 1991; 58 FR 36149, July 6, 1993; 59 FR 10304, Mar. 4, 1994]

§ 61.59 Effective period required before changes.

Except as provided in § 61.58(a)(3) or except as otherwise authorized by the Commission, new rates or regulations must be effective for at least 30 days before any change may be made.

§ 61.67 New or discontinued telephone and teletypewriter service points; mileages.

Message toll telephone service points and teletypewriter exchange service points added or discontinued during a calendar month may be filed not later than 20 days after the end of such month where the basic schedules of rates and regulations applicable to such message toll telephone and teletypewriter exchange service points are effective and the effective date of each addition of discontinuance is shown.

§ 61.68 Special Notations.

(a) A tariff filing must contain a statement of the authority for any matter to be filed on less than the notice required in § 61.58. The following must be used:

Issued on not less than — days' notice under authority of — (specific reference to the special permission, decision, order or section of these rules).

If all the matter in a tariff publication is to become effective on less than the notice required in § 61.58, specific reference to the Commission authority must be shown on the title page. If only a part of the tariff publication is to become effective on less than the notice required in § 61.58, reference to the Commission authority must appear on the same page(s), and be associated with the pertinent matter.

(b) When a portion of any tariff publication is issued in order to comply

with the Commission order, the following notation must be associated with that portion of the tariff publication:

In compliance with the order of the Federal Communications Commission in — (a specific citation to the applicable order should be made).

§61.69 Rejection.

When a tariff publication is rejected by the Commission, its number may not be used again. The rejected tariff publication may not be referred to as cancelled or revised. The publication that is subsequently issued in lieu of the rejected tariff publication must bear the notation

In lieu of —, rejected by the Federal Communications Commission.

§61.71 Reissued matter.

Matter in effect for less than 30 days and brought forward without change from another tariff publication must bear the appropriate symbol provided in §61.54(i)(1) for reissued matter. The number and original effective date of the tariff publication in which the matter was originally published must be associated with the reissued matter.

§61.72 Posting.

(a) Offering carriers must post (i.e., keep accessible to the public) during the carrier's regular business hours, a schedule of rates and regulations. This schedule must include all effective and proposed rates and regulations pertaining to the services offered to and from the community or communities served, and must be the same as that on file with the Commission. This posting requirement must be satisfied by the following methods:

(1) Where the filing has an office or offices open to the public in states or territories of the United States, the carrier must post the schedule of rates and regulations in one office in each state or territory of its operation.

(2) A carrier must provide a telephone number for public inquiries about information contained in its tariffs. This telephone number should be made readily available to all interested parties.

(3) A carrier must post a notice in each business office of the carrier open to the public in that state or territory, stating the street address of the location in which the schedule of rates and regulations can be found and the telephone number for public inquiries on tariffs.

(b) The posting of rates and regulations shall be considered timely if they are available for public inspection at the posting locations within 15 days of their filing with the Commission.

§61.73 Duplication of rates or regulations.

A carrier concurring in schedules of another carrier must not publish conflicting or duplicative rates or regulations.

§61.74 References to other instruments.

(a) Except as otherwise provided in this and other sections of this part, no tariff publication filed with the Commission may make reference to any other tariff publication or to any other document or instrument.

(b) Tariffs for end-on-end through services may reference the tariffs of other carriers participating in the offering.

(c) Tariffs may reference concurrences for the purpose of starting where rates or regulations applicable to a service not governed by the tariff may be found.

CONCURRENCES

§61.131 Scope.

Sections 61.132 through 61.136 apply to a carrier which must file concurrences reflecting rates and regulations for through service provided in conjunction with other carriers and to a carrier which has chosen, as an alternative to publishing its own tariff, to arrange concurrence in an effective tariff of another carrier. Limited or partial concurrences will not be permitted.

§61.132 Method of filing concurrences.

A carrier proposing to concur in another carrier's effective tariff must deliver two copies of the concurrence to the issuing carrier in whose favor the concurrence is issued. The concurrence must be signed by an officer or agent of

the carrier executing the concurrence, and must be numbered consecutively in a separate series from its FCC tariff numbers. At the same time the issuing carrier revises its tariff to reflect such a concurrence, it must submit both copies of the concurrence to the Commission. The concurrence must bear the same effective date as the date of the tariff filing reflecting the concurrence.

§ 61.133 Format of concurrences.

(a) Concurrences must be issued in the following format:

CONCURRENCE

F.C.C. Concurrence No. ———
(Cancels F.C.C. Concurrence No. ——
(Name of Carrier ————)
(Post Office Address ————)
(Date) ———— 19—.
Secretary,
Federal Communications Commission, Washington, D.C. 20554.
This is to report that (name of concurring carrier) assents to and concurs in the tariffs described below. (Name of concurring carrier) thus makes itself a party to these tariffs and obligates itself (and its connecting carriers) to observe every provision in them, until a notice of revocation is filed with the Commission and delivered to the issuing carrier.
This concurrence applies to interstate (and foreign) communication:
1. Between the different points on the concurring carrier's own system;
2. Between all points on the concurring carrier's system and the systems of its connecting carriers; and
3. Between all points on the system of the concurring carrier and the systems of its connecting carriers on the one hand, and, on the other hand, all points on the system of the carrier issuing the tariff or tariffs listed below and the systems of its connecting carriers and other carriers with which through routes have been established.

(NOTE: Any of the above numbered paragraphs may be omitted or the wording modified to state the points to which the concurrence applies.)

TARIFF

(Here describe the tariff or tariffs concurred in by the carrier, specifying FCC number, title, date of issuance, and date effective. Example: A.B.C. Communications Company, Tariff FCC No. 1, Interstate Telegraph Message Service, Issued January 1, 1983, Effective April 1, 1983).

Cancels FCC Concurrence No. ——, effective ——, 19—.

(Name of concurring carrier) ————
By ————
(Title) ————

(b) No material is to be included in a concurrence other than that indicated in the above-prescribed form, unless specially authorized by the Commission. A concurrence in any tariff so described will be deemed to include all amendments and successive issues which the issuing carrier may make and file. All such amendments and successive issues will be binding between customers and carriers. Between carriers themselves, however, the filing by the issuing carrier of an amendment or successive issue with the Commission must not imply or be construed to imply an agreement to the filing by concurring carriers. Such filings do not affect the contractual rights or remedies of any concurring carrier(s) which have not, by contract or otherwise, specifically consented in advance to such amendment or successive issue.

§ 61.134 Concurrences for through services.

A carrier filing rates or regulations for through services between points on its own system and points on another carrier's system (or systems), or between points on another carrier's system (or systems), must list all concurring, connecting or other participating carriers as provided in § 61.54(f), (g) and (h). A concurring carrier must tender a properly executed instrument of concurrence to the issuing carrier. If rates and regulations of the other carriers engaging in the through service(s) are not specified in the issuing carrier's tariff, that tariff must state where the other carrier's rates and regulations can be found. Such reference(s) must contain the FCC number(s) of the referenced tariff publication(s), the exact name(s) of the carrier(s) issuing such tariff publication(s), and must clearly state how the rates and regulations in the separate publications apply.

§ 61.135 Concurrences for other purposes.

When an issuing carrier permits another carrier to concur in its tariff, the issuing carrier's tariff must state the

concurring carrier's rates and points of service.

§61.136 Revocation of concurrences.

A concurrence may be revoked by a revocation notice or cancelled by a new concurrence. A revocation notice or a new concurrence, if less broad in scope than the concurrence it cancels, must bear an effective date not less than 45 days after its receipt by the Commission. A revocation notice is not given a serial number, but must specify the number of the concurrence to be revoked and the name of the carrier in whose favor the concurrence was issued. It must be in the following format:

REVOCATION NOTICE

(Name of carrier ————)
(Post office address ————)
(Date) ————, 19—.
Secretary,
Federal Communications Commission, Washington, D.C. 20554.

Effective ——, 19— FCC Concurrence No. —, issued by (Name of concurring carrier) in favor of (Name of issuing carrier) is hereby cancelled and revoked. Rates and regulations of (Name of concurring carrier) and its connecting carriers will thereafter be found in Tariff FCC No. — issued by —— (If the concurring carrier has ceased operations, the revocation notice must so indicate.)

(Name of carrier) ————————
By ————————
(Title) ————————

APPLICATIONS FOR SPECIAL PERMISSION

§61.151 Scope.

Sections 61.152 and 61.153 set forth the procedures to be followed by a carrier applying for a waiver of any of the rules in this part.

[55 FR 19173, May 8, 1990]

§61.152 Terms of applications and grants.

Applications for special permission must contain:

(a) A detailed description of the tariff publication proposed to be put into effect;

(b) A statement citing the specific rules and the grounds on which waiver is sought;

(c) A showing of good cause; and

(d) A statement as to the date and method of filing the original of the application for special permission as required by §61.153(b) and the date and method of filing the copies required by §61.153 (a) and (c).

If approved, the carrier must comply with all terms and use all authority specified in the grant. If a carrier elects to use less than the authority granted, it must apply to the Commission for modification of the original grant. If a carrier elects not to use the authority granted within sixty days of its effective date, the original grant will be automatically cancelled by the Commission.

[55 FR 19173, May 8, 1990]

§61.153 Method of filing applications.

(a) An application for special permission must be addressed to ''Secretary, Federal Communication Commission, Washington, DC 20554.'' The date on which the application is received by the Secretary of the Commission (or the Mail Room where submitted by mail) is considered the official filing date.

(b) In addition, for all special permission applications requiring fees as set forth at part 1, subpart G of this chapter, the issuing carriers must submit the original of the application letter (without attachments), FCC Form 155, and the appropriate fee to the Mellon Bank, Pittsburgh, PA at the address set forth in §1.1105. The carrier should submit these fee materials on the same date as the submission in paragraph (a).

(c) In addition to the requirements set forth in paragraphs (a) and (b) of this section, the issuing carrier must send a copy of the application letter with all attachments to the Secretary, Federal Communications Commission and a separate copy with all attachments to the Chief, Tariff Review Branch. If a carrier applies for special permission to revise joint tariffs, the application must state that it is filed on behalf of all carriers participating in the affected service. Applications must be numbered consecutively in a series separate from FCC tariff numbers, bear the signature of the officer or agent of the carrier, and be in the following format:

Application No.

(Date)

Secretary
Federal Communications Commission
Washington, DC 20554.

Attention: Common Carrier Bureau (here provide the statements required by §61.152).

(Exact name of carrier) _____

(Name of officer or agent) _____

(Title of officer or agent) _____

[55 FR 19173, May 8, 1990]

ADOPTION OF TARIFFS AND OTHER DOCUMENTS OF PREDECESSOR CARRIERS

§ 61.171 Adoption notice.

When a carrier's name is changed, or its operating control transferred from one carrier to another in whole or in part, the successor carrier must file tariff revisions to reflect the name change. The successor carrier may either immediately reissue the entire tariff in its own name, or immediately file an adoption notice. Within 35 days of filing an adoption notice, the successor must reissue the entire tariff in its own name. The reissued tariff must be numbered in the series of the successor carrier, and must contain all original pages without changes in regulations or rates. The transmittal letter must state the tariff is being filed to show a change in the carrier's name pursuant to §61.171 of the Commission's Rules. The adoption notice, if used, must read as follows:

The (Exact name of successor carrier or receiver) here adopts, ratifies and makes its own in every respect, all applicable tariffs and amendments filed with the Federal Communications Commission by (predecessor) prior to (date).

§ 61.172 Changes to be incorporated in tariffs of successor carrier.

When only a portion of properties is transferred to a successor carrier, that carrier must incorporate in its tariff the rates applying locally between points on the transferred portion. Moreover, the predecessor carrier must simultaneously cancel the corresponding rates from its tariffs, and reference the FCC number of the successor carrier's tariff containing the rates that will thereafter apply.

SUSPENSIONS

§ 61.191 Carrier to file supplement when notified of suspension.

If a carrier is notified by the Commission that its tariff filing has been suspended, the carrier must file immediately a consecutively numbered supplement without an effective date, which specifies the schedules which have been suspended.

§ 61.192 Contents of supplement announcing suspension.

(a) A supplement announcing a suspension by the Commission must specify the term of suspension imposed by the Commission.

(b) A supplement announcing a suspension of either an entire tariff or a part of a tariff publication, must specify the applicable tariff publication effective during the period of suspension.

§ 61.193 Vacation of suspension order; supplements announcing same; etc.

If the Commission vacates a suspension order, the affected carrier must issue a supplement or revised page stating the Commission's action as well as the lawful schedules.

PART 62—APPLICATIONS TO HOLD INTERLOCKING DIRECTORATES

GENERAL

Sec.
62.1 Scope and method of securing authorization.
62.2 Definitions.

CONTENTS OF APPLICATIONS

62.11 Information required.
62.12 Information required for findings of common ownership.

ADMINISTRATIVE REGULATIONS

62.21 Signature.
62.22 Form of application; number of copies; size of paper; etc.
62.23 Additional or different positions with same companies.
62.24 Change in status; Commission to be informed.
62.25 Authorization to hold interlocking directorates in commonly owned carriers.
62.26 Reporting requirements.

AUTHORITY: Sec. 4, 48 Stat. 1066, as amended; 47 U.S.C. 154. Interpret or apply sec. 212, 48 Stat. 1974, as amended; 47 U.S.C. 212.

SOURCE: 50 FR 31377, Aug. 2, 1985, unless otherwise noted.

GENERAL

§62.1 Scope and method of securing authorization.

No person may hold the position of officer or director in more than one carrier subject to the Communications Act of 1934, as amended, unless duly authorized to do so pursuant to the regulations set forth in this part:

(a) Application must be made to hold interlocking positions with more than one carrier subject to the Act where any carrier sought to be interlocked has been found by the Commission to have market power and is therefore defined as a dominant carrier under 47 CFR part 61, or where any carrier has not yet been found to be non-dominant, except for cellular licensees in different geographic markets.

(b) Persons seeking positions as officers or directors of (1) cellular radio licensees in different geographic markets; (2) carriers which have been found to be non-dominant; and (3) holding or parent companies of carriers, are authorized to serve in those capacities without making application to this Commission.

[51 FR 6116, Feb. 20, 1986]

§62.2 Definitions.

As used in this part, the term:

(a) *Officer or director* shall include the duties, or any of the duties, ordinarily performed by a director, president, vice president, secretary, treasurer, or other officer of a carrier, such as general counsel, general solicitor, general attorney, comptroller, general auditor, general manager, general commercial manager, chief engineer, general superintendent, general land and tax agent, or chief purchasing agent;

(b) *Interlocking director* shall mean a person who performs the duties of ''officer of director'' in more than one carrier subject to the Communications Act of 1934, as amended; and

(c) *Commonly owned carriers* shall mean two or more carriers, one of which directly or indirectly owns more than 50 percent of the stock of the other carrier or carriers, or 50 percent or more of whose stock is owned directly or indirectly by the same person.

CONTENTS OF APPLICATIONS

§62.11 Information required.

Each application shall include the following information:

(a) The full name, occupation, and business address of the applicant.

(b) With respect to each carrier of which the applicant is an officer or director or seeks to be an officer of director, indicate the applicant's position, the nature of the applicant's duties, the date applicant assumed or will assume such duties, and specify every common carrier in which applicant has a financial interest, together with a description thereof.

(c) Provide a full explanation of the reasons why grant of the authority sought will not adversely affect either public or private interests. In this regard, address whether grant of the permission requested could result in anticompetitive conduct by carriers covered by the request or by carriers upon which applicant already acts as officer or director, diminution in the independence of each carrier, or potential conflicts of interests on the part of common directors or officers in violation of their fiduciary duties. Set forth any steps which will be taken by the applicant to safeguard against such occurrences.

(d) State whether the applicant has, as director or officer of any carrier subject to the Act, received for his own benefit, directly or indirectly, any money or thing of value in respect of negotiation, hypothecation, or sale of any securities issued or to be issued by such carriers, or has shared in any of the proceeds thereof, or has participated in the making or paying of any dividends of such carrier from any funds properly included in capital accounts.

§62.12 Information required for findings of common ownership.

Authorization to hold interlocking directorates based upon a finding of common ownership must be obtained where a carrier found to be dominant under 47 CFR part 61 or where any carrier not yet found to be non-dominant

is involved. Each application for such authorization shall state the following:

(a) The name and address of the carrier which seeks a finding that it owns more than 50 percent of the stock of another or other carriers; or the name and address of the person who seeks a finding that he owns 50 percent or more of the stock of two or more carriers; and

(b) The name and address of each carrier with respect to which the finding is sought by the applicant; for each such carrier, the total number of outstanding shares of stock of each category (common, preferred, etc.); the voting rights of each category; for each category, the number of shares directly or indirectly owned by the applicant and the percentage of the total number of outstanding shares in each category so owned. Where ownership is indirect, the applicant shall submit information regarding each intermediate entity involved to show that the applicant is the owner of the stock described.

[50 FR 31377, Aug. 2, 1985, as amended at 51 FR 6116, Feb. 20, 1986]

ADMINISTRATIVE REGULATIONS

§ 62.21 Signature.

(a) The original application filed pursuant to § 62.11, and any amendment or change in status, shall be signed by the individual applicant.

(b) The original application filed pursuant to § 62.12 should be signed by the applicant, if an individual, or by a duly authorized officer, if a company or corporation.

§ 62.22 Form of application; number of copies; size of paper; etc.

The original application and two copies thereof shall be filed with the Commission. Each copy shall bear the dates and signatures that appear on the original and shall be complete in itself, but the signatures on the copies may be stamped or typed. The application shall be submitted in typewritten or printed form, on paper not more than 8 and ½ inches wide and not more than 11 inches long, with a left-hand margin of approximately 1 and ½ inches, and if typewritten, the impression must be on only one side of the paper and must be doubled spaced.

[52 FR 5294, Feb. 20, 1987]

§ 62.23 Additional or different positions with same companies.

If an applicant has been authorized by the Commission upon application filed pursuant to § 62.11 to hold certain positions as officer or director of certain carriers and is subsequently elected or appointed, or anticipates election or appointment, to additional or different positions with one or more of the same carriers, he may report the change in the manner and form provided in § 62.24 relating to ''change in status''. Authorization for the holding of such additional or different positions shall be deemed granted as of the 15th day following the filing of such report, unless within that time the Commission shall call upon the applicant for additional information or for the filing of a formal application.

§ 62.24 Change in status; Commission to be informed.

Should any change occur in the status as reported under this part, the applicant shall report such change to the Commission within 30 days after such change occurs.

§ 62.25 Authorization to hold interlocking directorates in commonly owned carriers.

After the Commission has found upon application filed pursuant to § 62.12 that two or more carriers are commonly owned carriers, any duly designated person is authorized hereby to be an interlocking director of two or more such carriers. However, the authorization herein granted to any interlocking director shall be automatically canceled with respect to any position held in any such carrier which at any time ceases to be a commonly owned carrier, without notice thereof by the Commission, either to the interlocking director, to the carrier, or to the person upon whose application a finding of common ownership was made. In event of such cancellation, the interlocking director shall immediately cease and desist from acting in

that capacity with respect to the carrier which has ceased to be a commonly owned carrier until such time as appropriate authorization is obtained pursuant to this part.

§ 62.26 Reporting requirements.

All persons holding interlocking positions on more than one carrier subject to the Act, including positions upon a parent or holding company of a carrier, shall report to the Commission within 30 days of assumption of the interlocking positions, including the title of the position(s) held for each carrier (or holding or parent company of a carrier) represented. This subsection shall also apply to positions upon connecting carriers as defined in 47 U.S.C. 153(u), so long as the interlock with the connecting carriers) also involves positions upon a fully subject carrier. This subsection shall not apply to persons who must file applications pursuant to §§ 62.1(a), 62.12, and 62.25 hereof.

[50 FR 31377, Aug. 2, 1985, as amended at 51 FR 6116, Feb. 20, 1986]

PART 63—EXTENSION OF LINES AND DISCONTINUANCE, REDUCTION, OUTAGE AND IMPAIRMENT OF SERVICE BY COMMON CARRIERS; AND GRANTS OF RECOGNIZED PRIVATE OPERATING AGENCY STATUS

EXTENSIONS AND SUPPLEMENTS

Sec.
63.01 Contents of applications for domestic common carriers.
63.02 Special provisions relating to extensions involving small projects.
63.03 Special provisions relating to small projects for supplementing of facilities.
63.04 Special provisions relating to temporary or emergency service.
63.05 Commencement and completion of construction for domestic common carriers.
63.06 Authority for supplementing facilities under approved annual program plan.
63.07 Special procedures for non-dominant domestic common carriers.
63.08 Lines outside of a carrier's exchange telephone service area.
63.10 Regulatory classification of U.S. international carriers.
63.11 Notification by and prior approval for U.S. international carriers that have or propose to acquire ten percent investments by, and/or an affilation with, a foreign carrier.
63.12 Streamlined processing of certain international facilities-based and resale applications.
63.13 Streamlined procedures for modifying regulatory classification of U.S. international carriers from dominant to non-dominant.
63.14 Prohibition on agreeing to accept special concessions.
63.15 Special procedures for international service providers.
63.17 Special provisions for U.S. international common carriers.
63.18 Contents of applications for international common carriers.
63.19 Special procedures for discontinuances of international services.
63.20 Copies required; fees; and filing periods for international service providers.
63.21 Conditions applicable to international Section 214 authorizations.

GENERAL PROVISIONS RELATING TO ALL APPLICATIONS UNDER SECTION 214

63.50 Amendment of applications.
63.51 Additional information.
63.52 Copies required; fees; and filing periods for domestic authorizations.
63.53 Form.

DISCONTINUANCE, REDUCTION, OUTAGE AND IMPAIRMENT

63.60 Definitions.
63.61 Applicability.
63.62 Type of discontinuance, reduction, or impairment of telephone or telegraph service requiring formal application.
63.63 Emergency discontinuance, reduction, or impairment of service.
63.65 Closure of public toll station where another toll station of applicant in the community will continue service.
63.66 Closure of or reduction of hours of service at telephone exchanges at military establishments.
63.71 Special procedures for discontinuance, reduction or impairment of service by domestic non-dominant carriers.
63.90 Publication and posting of notices.
63.100 Notification of service outage.

CONTENTS OF APPLICATIONS; EXAMPLES

63.500 Contents of applications to dismantle or remove a trunk line.
63.501 Contents of applications to sever physical connection or to terminate or suspend interchange of traffic with another carrier.

63.504 Contents of applications to close a public toll station where no other such toll station of the applicant in the community will continue service and where telephone toll service is not otherwise available to the public through a telephone exchange connected with the toll lines of a carrier.
63.505 Contents of applications for any type of discontinuance, reduction, or impairment of telephone service not specifically provided for in this part.
63.601 Contents of applications for authority to reduce the hours of service of public coast stations under the conditions specified in § 63.70.

REQUEST FOR DESIGNATION AS A RECOGNIZED PRIVATE OPERATING AGENCY

63.701 Contents of application.
63.702 Form.

AUTHORITY: 47 U.S.C. 151, 154(i), 154(j), 201–205, 218, 403 and 533, unless otherwise noted.

SOURCE: 28 FR 13229, Dec. 5, 1963, unless otherwise noted.

EXTENSIONS AND SUPPLEMENTS

§ 63.01 Contents of applications for domestic common carriers.

Except as otherwise provided in this part, any party proposing to undertake any construction of a new line, extension of any line, acquisition, lease, or operation of any line or extension thereof or engage in transmission over or by means of such line, and such line originates and terminates in the United States, for which authority is required under the provisions of Section 214 of the Communications Act of 1934, as amended, shall request such authority by formal application which shall be accompanied by a statement showing how the proposed construction, etc., will serve the public interest, convenience, and necessity. Such statement must include the following information as applicable:

(a) The name and address of each applicant;

(b) The Government, State, or Territory under the laws of which each corporate applicant is organized;

(c) The name, title, and post office address of the officer to whom correspondence concerning the application is to be addressed;

(d) A statement as to whether the applicant is a carrier subject to section 214 of the Act or will become such a carrier as a result of the proposed construction, acquisition, or operation;

(e) A statement as to whether the facilities covered by the application will be used to extend communication service into territory at present not directly served by the applicant or to supplement existing facilities of the applicant, and the nature and classification of the communication services to be provided (e.g. telephone, telegraph, facsimile, data, private line, voice, television relay, etc.);

(f) The points between which the proposed facilities are to be located;

(g) A description of applicant's existing facilities between these points, showing specifically the total number of channels presently provided between major points on each principal route;

(h) A description of the facilities for which authority is requested, including:

(1) The number of channels of each type to be provided by such facilities;

(2) The number, if any, of wires, conductors, and coaxial units of each type (not equipped for immediate operation) capable of providing additional channels of communication only by the construction of additional apparatus, equipment, or other facilities;

(3) The types of classes of toll telephone or telegraph offices to be established;

(i) Applicant's present and estimated future requirements, both for the route of the proposed facilities and for routes from which any rerouting to the proposed facilities is contemplated within the period of the estimate. Where 60 domestic circuits or more are to be derived from the proposed construction, acquisition, or lease, list the principal circuit groups currently operated, the number of circuits in each group, and the estimate number of circuits required in each group to meet the load demands for the ensuing one year, two year, or five year period, as may be appropriate in order to provide adequate justification for said increases, including current traffic load trends, as indicated by periodic traffic load studies.

(j) A map or sketch showing:

(1) Route of proposed project;

(2) Type and ownership of structures (open wire, aerial cable, underground cable, carrier systems, etc.);

(3) Facilities, if any, to be removed;

(4) Cities, towns, and villages along routes indicated on map or sketch, with approximate population of each, and route kilometers between the principal points;

(5) Location of important operating centers, and repeater or relay points;

(6) State boundary lines through which the proposed facilities will extend;

(7) Topographical features which may require special consideration or entail added cost;

(k) One or more of the following statements, as pertinent:

(1) If proposed facilities are to be constructed, the details thereof, including summary of cost estimates separately by Plant Accounts affected (in case of construction by or for two or more parties, the quantities of facilities of each kind acquired by each and the cost attributed thereto), quantities and cost of major materials; and amount of labor and cost thereof;

(2) If proposed facilities are to be leased, the details thereof, including the name of the lessor, a summary of the terms of the lease arrangements (or a copy of the lease), the anticipated lease rental, setting up charges, added equipment costs, and each other added cost to the applicant;

(3) If proposed facilities are to be purchased, the name of the vendor; a detailed description of all the properties involved including assets other than plant being acquired in connection with the same transaction; a complete description of the contractual arrangements relating to the sale or a copy of the contract; added equipment cost and each other added cost to the applicant; a statement of the original cost of, and the related reserve requirement for depreciation applicable to, the plant to be acquired (with a full explanation of the manner in which these amounts were determined) including, when appropriate, a separate statement of such amounts applicable to duplicate or other plant which will be retired by the vendee in the reconstruction of the acquired property or its consolidation with previously owned property; and a statement of the estimated annual savings in expenses expected to result from the proposed acquisition;

(4) If facilities are to be acquired or operated other than by lease or purchase a detailed description of the facilities involved; the terms of the contract or other arrangement relating to such acquisition or operation; added equipment costs; and each other added cost to the applicant;

(l) A summary of the factors showing the public need for the proposed facilities;

(m) Economic justification for the proposed project including, where the application involves an extension into new territory at present not directly served by the applicant, estimated added revenues and costs and the basis therefor;

(n) Description of the manner and means by which interstate and foreign communication services of a similar character are now being rendered by the applicant and others in the area to be served by the proposed facilities, including reasons why existing facilities are inadequate;

(o) Proposed tariff charges and regulations for domestic applications;

(p) A statement of the accounting proposed to be performed in connection with the project. If the facilities are to be acquired by purchase, such proposed accounting shall be presented in journal entry form (on an estimated basis if actual amounts are not available), together with a full explanation of the manner in which the respective amounts were determined.

(q) A statement whether an authorization of the facilities is categorically excluded as defined by § 1.1306 of the Commission's rules. If answered affirmatively, an environmental assessment as described in § 1.1311 need not be filed with the application.

[28 FR 13229, Dec. 5, 1963, as amended at 41 FR 20661, May 20, 1976; 45 FR 6585, Jan. 29, 1980; 50 FR 18659, May 2, 1985; 51 FR 15003, Apr. 22, 1986; 57 FR 647, Jan. 8, 1992; 57 FR 57965, Dec. 8, 1992; 58 FR 44461, Aug. 23, 1993; 58 FR 44906, Aug. 25, 1993; 61 FR 15727, Apr. 9, 1996]

EFFECTIVE DATE NOTE: At 61 FR 15727, Apr. 9, 1996, in § 63.01, the section heading and introductory text were revised; paragraphs (k)(5) through (k)(7), (r), (s), and notes 1 through 4 to paragraph (r) were removed. This amendment contains information collection and recordkeeping requirements and will not become effective until approval has

been given by the Office of Management and Budget.

§ 63.02 Special provisions relating to extensions involving small projects.

Applications involving extension of service into domestic territory at present not directly served by the applicant by the construction, acquisition, or operation of facilities, the cost of which to the applicant does not exceed $50,000 or the annual rental of which does not exceed $10,000, may omit the information called for by § 63.01 that is clearly not relevant to such extension. (Normally the information required by § 63.01(h)(1), (h)(2), (i), (j), and (k)(1) may be omitted.) At minimum, the application shall contain a general description of the existing and proposed facilities, points of service, and cost.

(Sec. 303, 48 Stat. 1082, as amended; 47 U.S.C. 303)

[41 FR 20661, May 20, 1976]

§ 63.03 Special provisions relating to small projects for supplementing of facilities.

(a) Facilities authorized under this section are limited to those that supplement existing facilities. Excluded from consideration under this section are applications that would involve:

(1) A new or modified service;

(2) One or more points of service not previously authorized to the applicant for the type of service involved;

(3) New transmission facilities (excluding supplemental radio transmitters) over which applicant has not previously received authority under part 63;

(4) An action that may have a significant impact upon the environment, see § 1.1307 of this chapter.

(5) International channels exceeding 60 64-kilobit per second circuits; or

(6) Domestic channels where the construction or acquisition cost exceeds $2,000,000 or where the annual rental exceeds $500,000.

(b) Applications submitted under this section shall be clearly identified as requesting authority pursuant to this section and the original shall be accompanied by two copies. The application shall contain a statement showing how the proposed acquisition, lease, operation or construction would serve the public interest, convenience, and necessity. Such statement must include information concerning:

(1) The terminal communities between which the proposed facilities are to be located;

(2) A statement as to the type of communications services which will be provided on the proposed facilities;

(3) The need for the proposed construction, acquisition, lease or operation;

(4) A description of the proposed facilities giving the number of each type of communication channel to be provided thereby;

(5) The estimated construction cost, annual rental, or purchase price, as appropriate for the proposed facilities;

(6) The route kilometers of the facilities involved (excluding leased facilities) and airline kilometers between terminal communities in the proposed project; and

(7) The accounting to be performed by the carrier with respect to the proposed project.

(c) In addition to the requirements of paragraph (b) of this section, applications involving overseas circuits shall:

(1) Cite by file number and date of adoption a currently effective Commission Order granted pursuant to § 63.01 granting the applicant authority to acquire like facilities for the provision of service between the points for which authority for additional circuitry is being requested. Where the applicant has been granted a currently effective authorization (Blanket Order) which specifies in an appendix to that Commission Order all or most of the facilities of a specific type (e.g. satellite circuits provided by satellites over a given ocean basin, circuits in a single submarine cable system, etc.), the applicant has been authorized to use to serve the ocean basin, area or country to which applicant is seeking to acquire supplemental facilities, the applicant shall cite that authorization.

(2) Contain a specific statement that applicant will construct, acquire and/or operate the requested facilities in accordance with the terms and conditions of the Order cited pursuant to paragraph (c)(1) of this section.

(3) When the Commission Order cited pursuant to paragraph (c)(1) of this section is a Blanket Authorization, applicant shall submit a revised Appendix showing the changes thereto which will occur on grant of its application.

(d) Such supplementing of facilities shall be deemed to have been authorized by the Commission effective as of the 21st day following the date the application appears on public notice unless on or before the 21st day the Commission shall notify the applicant to the contrary. Where supplemental facilities are authorized under this section, they shall be considered subject to the same terms and conditions, if any, that the Commission has imposed upon a prior authorization which is being supplemented.

(e) Any carrier may request continuing authority, subject to termination by the Commission at any time upon 10 days' notice to the carrier, to commence small projects for the supplementing of existing facilities. Such an application shall set forth the need for such authority; however, it shall not be considered granted pursuant to paragraph (d) of this section. Upon authorization of such continuing authority by the Commission, the carrier may commence small projects subject to the limitations set forth in paragraph (a) of this section, except that the construction, installation and acquisition cost for each project shall be limited to $70,000 or an annual rental of $14,000. Not later than the 30th day following the end of each calender year covered by such authority, the carrier shall file a report in writing on the projects commenced pursuant to continuing authority except that carriers planning to file an application under an approved annual program, see §63.06, shall file their report as an exhibit to the annual application. The report shall make reference to this paragraph and set forth, with respect to each project (construction, installation, acquisition, lease including any renewal thereof, and operation) which was commenced thereunder, the following information:

(1) The type of facility constructed, installed, acquired, or leased;

(2) The route kilometers thereof (excluding leased facilities);

(3) The terminal communities served and airline kilometers between such communities;

(4) The cost thereof, including construction, installation, acquisition, or lease; and

(5) When appropriate, the name of the lessor company and the dates of commencement and termination of the lease.

(Sec. 303, 48 Stat. 1082, as amended; 47 U.S.C. 303)

[41 FR 20661, May 20, 1976, as amended at 49 FR 22818, June 1, 1984; 55 FR 20397, May 16, 1990; 58 FR 44461, Aug. 23, 1993; 58 FR 44906, Aug. 25, 1993]

§63.04 Special provisions relating to temporary or emergency service.

(a) For the purpose of this section the following definitions shall apply:

(1) *Temporary service* shall mean service for a period not exceeding 6 months;

(2) *Emergency service* shall mean service for which there is an immediate need occasioned by conditions unforeseen by, and beyond the control of, the carrier.

(b) Requests for immediate authority for temporary service or for emergency service may be made by letter or telegram setting forth why such immediate authority is required, the nature of the emergency, the type of facilities proposed to be used, the route kilometers thereof, the terminal communities to be served, and airline kilometers between such communities; how these points are presently being served by the applicant or other carriers, the need for the proposed service, the cost involved including any rentals, the date on which the service is to begin, and where known, the date or approximate date on which the service is to terminate.

(c) Without regard to the other requirements of this part, and by application setting forth the need therefor, any carrier may request continuing authority, subject to termination by the Commission at any time upon 10 days' notice to the carrier, to provide temporary or emergency service by the construction or installation of facilities where the estimated construction, installation, and acquisition costs do not exceed $35,000 or an annual rental of not more than $7,000 provided that

such project does not involve a major action under the Commission's environmental rules. (See subpart I of part 1 of this chapter.) Any carrier to which continuing authority has been granted under this paragraph shall, not later than the 30th day following the end of each 6–month period covered by such authority, file with the Commission a statement in writing making reference to this paragraph and setting forth, with respect to each project (construction, installation, lease, including any renewals thereof), which was commenced or, in the case of leases, entered into under such authority, and renewal or renewals thereof which were in continuous effect for a period of more than one week, the following information:

(1) The type of facility constructed, installed, or leased;

(2) The route kilometers thereof (excluding leased facilities);

(3) The terminal communities served and the airline kilometers between terminal communities in the proposed project;

(4) The cost thereof, including construction, installation, or lease;

(5) Where appropriate, the name of the lessor company, and the dates of commencement and termination of the lease.

(d)(1) A request may be made by any carrier for continuing authority to lease and operate, during any emergency when its regular facilities become inoperative or inadequate to handle its traffic, facilities or any other carrier between points between which applicant is authorized to communicate by radio for the transmission of traffic which applicant is authorized to handle.

(2) Such request may be made by letter or telegram making reference to this paragraph and setting forth the points between which applicant desires to operate facilities of other carriers and the nature of the traffic to be handled thereover.

(3) Continuing authority for the operation thereafter of such alternate facilities during emergencies shall be deemed granted effective as of the 21st day following the filing of the request unless on or before that date the Commission shall notify the applicant to the contrary: provided, however, Applicant shall, not later than the 30th day following the end of each quarter in which it has operated facilities of any other carrier pursuant to authority granted under this paragraph, file with the Commission a statement in writing making reference to this paragraph and describing each occasion during the quarter when it has operated such facilities, giving dates, points between which such facilities were located, hours or minutes used, nature of traffic handled, and reasons why its own facilities could not be used.

(Sec. 303, 48 Stat. 1082, as amended; 47 U.S.C. 303)

[28 FR 13229, Dec. 5, 1963, as amended at 41 FR 20662, May 20, 1976; 58 FR 44906, Aug. 25, 1993]

§ 63.05 Commencement and completion of construction for domestic common carriers.

Unless otherwise determined by the Commission upon proper showing in any particular case, in the event construction shall not have been begun upon a project involving an expenditure of more than $500,000, or where facilities authorized have not been leased or acquired, within 12 months from the date of the Commission's authorization, or all or part of the proposed facilities shall not have been placed in operation within 36 months after such date, such authorization shall terminate at the end of such 12 or 36 months' period, as the case may be; in the case of projects involving an expenditure of $500,000 or less, the authorization therefor shall terminate at the end of 9 months or 18 months, as the case may be, in the event construction thereof shall not have been commenced, or the facilities placed in operation, within such respective periods.

(Sec. 303, 48 Stat. 1082, as amended; 47 U.S.C. 303)

[41 FR 20662, May 20, 1976]

§ 63.06 Authority for supplementing facilities under approved annual program plan.

Any carrier may submit to the Commission a procedure pursuant to which such carrier proposes to request authority covering an annual program of projects for the supplementing of its

existing facilities. After approval of such proposed procedure by the Commission, such carrier may request such authority in accordance with such procedure in lieu of filing separate applications for individual projects pursuant to §§63.01 and 63.03.

§63.07 Special procedures for nondominant domestic common carriers.

(a) Any party that would be a nondominant domestic interstate communications common carrier is authorized to provide domestic, interstate services to any domestic point and to construct, acquire, or operate any transmission line as long as it obtains all necessary authorizations from the Commission for use of radio frequencies.

(b) Any non-dominant carrier that constructs or acquires (not by lease) initial or additional circuits shall report these circuits to the Commission semi-annually. These reports shall be filed on a consolidated basis on February 1 (covering facilities over which service was initiated during the preceding July 1 to December 31 period) and August 1 (covering facilities over which service was initiated during the preceding January 1 to June 30 period) of each year. These reports shall include:

(1) Caption—''Section 63.07 Report,'' including initial certification file number (if assigned);

(2) Name and address of carrier;

(3) Type, number and terminal points of circuits added; (in addition, if service is provided via satellite, the identity of the satellite(s) and a transponder-by-transponder loading); and

(4) Construction cost.

The Commission may request supplemental information.

(c) Non-dominant, facilities-based domestic common carriers subject to this section shall not engage in any construction or extension of lines that may have a significant effect on the environment as defined in §1.1307 of this chapter without prior compliance with the Commission's environmental rules. See 1.1312 of this chapter.

[49 FR 34831, Sept. 4, 1984, as amended at 56 FR 13414, Apr. 2, 1991]

§63.08 Lines outside of a carrier's exchange telephone service area.

(a) An exchange telephone common carrier or its affiliate is not required to file for authority pursuant to 47 U.S.C. 214 and 47 CFR 63.01 to provide lines, or for existing lines, outside of the exchange telephone service area of that carrier and any of its affiliates when the lines are:

(1) For its non-common carrier services; or

(2) Sold to an unaffiliated party.

(b) If a nondominant common carrier and its affiliates are not affiliated with an exchange telephone common carrier, the nondominant carrier or its affiliate is not required to file for authority pursuant to 47 U.S.C. 214 and 47 CFR 63.01 to provide lines, or for existing lines, of the types described in paragraph (a) of this section between any domestic points. ''Nondominant'' is defined as in §61.15(a) of this chapter.

(c) A common carrier or its affiliate is not required to file for authority pursuant to 47 U.S.C. 214 and §63.01 to discontinue, reduce, or impair other non-common carrier service.

(d) A common carrier's costs of providing lines for non-common carrier offerings and costs of providing such offerings must be entered on books of account separate from those for its common carrier services.

(e) As used above, the term ''affiliate'' bars any financial or business relationship whatsoever by contract or otherwise, directly or indirectly between the carrier and the customer, except only the carrier-user relationship.

NOTE TO PARAGRAPH (e): Examples of situations in which a carrier and its customer will be deemed to be controlled or having a relationship include the following, among others: Where one is the debtor or creditor of the other (except with respect to charges for communication services); where they have a common officer, director, or other employee at the management level; where there is any element of ownership or other financial interest by one in the other; and where any part has a financial interest in both.

[49 FR 21335, May 21, 1984, as amended at 61 FR 10476, Mar. 14, 1996]

§ 63.10 Regulatory classification of U.S. international carriers.

(a) Unless otherwise determined by the Commission, any party authorized to provide an international communications service under this part shall be classified as either dominant or non-dominant for the provision of particular international communications services on particular routes as set forth in this section. The rules set forth in this section shall also apply to determinations of regulatory status pursuant to §§ 63.11 and 63.13. For purposes of paragraphs (a)(1) through (a)(3) of this section, ''affiliation'' and ''foreign carrier'' are defined as set forth in § 63.18(h)(1) (i) and (ii), respectively.

(1) A U.S. carrier that has no affiliation with, and that itself is not, a foreign carrier in a particular country to which it provides service (i.e., a destination country) will presumptively be considered non-dominant for the provision of international communications services on that route;

(2) A U.S. carrier that is, or that has or acquires an affiliation with a foreign carrier that is a monopoly in a destination country will presumptively be classified as dominant for the provision of international communications services on that route; and

(3) A U.S. carrier that is, or that has or acquires an affiliation with a foreign carrier that is not a monopoly in a destination country and that seeks to be regulated as non-dominant on that route bears the burden of submitting information to the Commission sufficient to demonstrate that its foreign affiliate lacks the ability to discriminate against unaffiliated U.S. carriers through control of bottleneck services or facilities in the destination country. Such a demonstration should address the factors that relate to the scope or degree of the foreign affiliate's bottleneck control, including those listed in Section § 63.18(h)(8).

(4) A carrier that is authorized under this part to provide to a particular destination country a particular international communications service, and that provides such service solely through the resale of an unaffiliated U.S. facilities-based carrier's international switched services (either directly or indirectly through the resale of another U.S. resale carrier's international switched services), shall presumptively be classified as nondominant for the provision of the authorized service. The existence of an affiliation with a U.S. facilities-based international carrier shall be assessed in accordance with the definition of affiliation contained in § 63.18(h)(1)(i), except that the phrase ''U.S. facilities-based international carrier'' shall be substituted for the phrase ''foreign carrier.''

(b) Any party that seeks to defeat the presumptions in paragraphs (a)(1), (a)(2) and (a)(4) of this section shall bear the burden of proof upon any issue it raises as to the proper classification of the U.S. carrier.

(c) Any carrier classified as dominant for the provision of particular services on particular routes under this section shall comply with the following requirements in its provision of such services on each such route:

(1) File international service tariffs on 14-days notice without cost support;

(2) Maintain complete records of the provisioning and maintenance of basic network facilities and services procured from its foreign carrier affiliate or from an allied foreign carrier, including, but not limited to, those it procures on behalf of customers of any joint venture for the provision of U.S. basic or enhanced services in which the U.S. and foreign carrier participate, which information shall be made available to the Commission upon request;

(3) Obtain Commission approval pursuant to § 63.18 before adding or discontinuing circuits; and

(4) File quarterly reports of revenue, number of messages, and number of minutes of both originating and terminating traffic within 90 days from the end of each calendar quarter.

[57 FR 57966, Dec. 8, 1992, as amended at 60 FR 67337, Dec. 29, 1995; 61 FR 15727, Apr. 9, 1996]

EFFECTIVE DATE NOTE: At 61 FR 15727, Apr. 9, 1996, in § 63.10, paragraphs (a) introductory text, (3), and (4) were amended; paragraph (c)(3) was revised. This amendment contains information collection and recordkeeping requirements and will not become effective until approval has been given by the Office of Management and Budget.

§63.11 Notification by and prior approval for U.S. international carriers that have or propose to acquire ten percent investments by, and/or an affiliation with, a foreign carrier.

(a) Any carrier authorized to provide international communications service under this part that, as of the effective date of this rule as amended in IB Docket No. 95–22, is, or has an affiliation with, a foreign carrier within the meaning of §63.18(h)(1)(i)(A) or (h)(1)(i)(B), or that as of such date knows of an existing ten percent or greater interest, whether direct or indirect, in the capital stock of the authorized carrier by a foreign carrier, or that after the effective date of this rule becomes affiliated with a foreign carrier within the meaning of §63.18(h)(1)(i)(A), shall notify the Commission within thirty days of the effective date of this rule or within thirty days of the acquisition of the affiliation, whichever occurs later. For purposes of this section, ''foreign carrier'' is defined as set forth in §63.18(h)(1)(ii).

(1) The notification shall certify to the information specified in paragraph (c) of this section.

(2) Any carrier that has previously notified the Commission of an affiliation with a foreign carrier, as defined by §63.18(h)(1) immediately prior to the rule's amendment in IB Docket No. 95–22, need not notify the Commission again of the same affiliation.

(b) Any carrier authorized to provide international communications service under this part that knows of a planned investment by a foreign carrier of a ten percent or greater interest, whether direct or indirect, in the capital stock of the authorized carrier shall notify the Commission within sixty days prior to the acquisition of such interest. The notification shall certify to the information specified in paragraph (c) of this section.

(c) The notification required under paragraphs (a) and (b) of this section shall contain a list of all affiliated foreign carriers and shall state individually the country or countries in which the foreign carriers named in paragraphs (a) and (b) of this section are authorized to provide telecommunications services offered to the public. It shall additionally specify which, if any, of these countries the U.S. carrier is authorized to serve under this part; what services it is authorized to provide to each such country; and the FCC File No. under which each such authorization was granted.

(1) The carrier also should specify, where applicable, those countries named in paragraph (c) of this section for which it provides a specified international communications service solely through the resale of the international switched or private line services of U.S. facilities-based carriers with which the resale carrier does not have an affiliation. Such an affiliation is defined in §63.18(h)(1)(i), except that the phrase ''U.S. facilities-based international carrier'' shall be substituted for the phrase ''foreign carrier.''

(2) The carrier shall also submit with its notification:

(i) The ownership information as required to be submitted pursuant to §63.18(h)(2);

(ii) Where the carrier is authorized as a private line reseller on a particular route for which it has an affiliation with a foreign carrier, as defined in §63.18(h)(1)(i), a certification as required to be submitted pursuant to §63.18(h)(4); and

(iii) A ''special concessions'' certification as required to be submitted pursuant to §63.18(i).

(3) The carrier is responsible for the continuing accuracy of the certifications provided under this section. Whenever the substance of any certification provided under this section is no longer accurate, the carrier shall as promptly as possible, and in any event within thirty days, file with the Secretary in duplicate a corrected certification referencing the FCC File No. under which the original certification was provided, *except that* the carrier shall immediately inform the Commission if at any time the representations in the ''special concessions'' certification provided under paragraph (c)(2)(iii) of this section are no longer true. *See* §63.18(i))(2). This information may be used by the Commission to determine whether a change in regulatory status may be warranted under §63.10.

(d) Unless the carrier notifying the Commission of a foreign carrier affiliation under paragraph (a) of this section qualifies for the presumption of non-dominant regulation pursuant to § 63.10(a)(4), it should submit the information specified in § 63.18(h)(8) to retain its non-dominant status on any affiliated route.

(e) The Commission will issue public notice of the submissions made under this section for 14 days.

(1) In the case of a notification filed under paragraph (a) of this section, the Commission, if it deems it necessary, will by written order at any time before or after the submission of public comments impose dominant carrier regulation on the carrier for the affiliated routes based on the provisions of § 63.10.

(2) In the case of a planned investment by a foreign carrier of a ten percent or greater interest, whether direct or indirect, in the capital stock of the authorized carrier, the Commission will, unless it notifies the carrier in writing within 30 days of issuance of the public notice that the investment raises a substantial and material question of fact as to whether the investment serves the public interest, convenience and necessity, presume the investment to be in the public interest. If notified that the acquisition raises a substantial and material question, then the carrier shall not consummate the planned investment until it has filed an application under § 63.18 and submitted the information specified under § 63.18 (h) (6) or (7) as applicable, and § 63.18(h)(8), and the Commission has approved the application by formal written order.

[60 FR 67338, Dec. 29, 1995, as amended at 61 FR 15727, Apr. 9, 1996]

EFFECTIVE DATE NOTE: At 61 FR 15727, Apr. 9, 1996, in § 63.11, paragraphs (a) introductory text, (2), (c)(1), (2), (3) and (d) were revised; paragraph (e)(2) was amended. This amendment contains information collection and recordkeeping requirements and will not become effective until approval has been given by the Office of Management and Budget.

§ 63.12 Streamlined processing of certain international facilities-based and resale applications.

(a) Except as provided by paragraph (c) of this section, a complete application seeking authorization under § 63.18(e) (1) and (2) to acquire facilities to provide international services shall be granted by the Commission 35 days after the date of public notice listing the application as accepted for filing.

(b) Issuance of public notice of the grant shall be deemed the issuance of § 214 certification to the applicant, which may commence operation on the 36th day after the date of public notice listing the application as accepted for filing, but only in accordance with the operations proposed in its application and the rules, regulations, and policies of the Commission.

(c) The streamlined processing procedures provided by paragraphs (a) and (b) of this section shall not apply where:

(1) The applicant seeks authority under either § 63.18(e)(1) for global § 214 authority to operate as a facilities-based carrier or § 63.18(e)(2) to resell international services, and the applicant has an affiliation within the meaning of § 63.18(h)(1)(i) with a facilities-based foreign carrier in a destination market, and the Commission has not yet made a determination as to whether that foreign carrier possesses market power in that market; or

(2) The applicant has an affiliation within the meaning of § 63.18(h)(1)(i) with a dominant U.S. facilities-based carrier whose international switched or private line services the applicant seeks authority to resell (either directly or indirectly through the resale of another reseller's services); or

(3) The applicant seeks authority under § 63.18(e)(2) to resell international private line services to a country for which the Commission has not determined as of the date of public notice of the application that equivalent resale opportunities exist between the United States and the destination country; or

(4) The application is formally opposed within the meaning of §1.1202(e) of this chapter; or

(5) The Commission has informed the applicant in writing, including by public notice, within 28 days after the date of public notice accepting the application for filing, that the application is not eligible for streamlined processing under this section.

(d) Any complete application that is subject to paragraph (c) of this section will be acted upon only by formal written order and operation for which such authorization is sought may not commence except in accordance with such order.

NOTE TO PARAGRAPH (c): The term ''facilities-based carrier'' means one that holds an ownership, indefeasible-right-of-user, or leasehold interest in bare capacity in an international facility, regardless of whether the underlying facility is a common or noncommon carrier submarine cable, or an INTELSAT or separate satellite system.

[61 FR 15728, Apr. 9, 1996]

EFFECTIVE DATE NOTE: At 61 FR 15728, Apr. 9, 1996, §63.12 was revised. This section contains information collection and recordkeeping requirements and will not become effective until approval has been given by the Office of Management and Budget.

§63.13 Streamlined procedures for modifying regulatory classification of U.S. international carriers from dominant to nondominant.

(a) Any carrier that is authorized to provide an international communications service under this part and that was classified by the Commission as dominant for all international routes and services prior to the effective date of this rule due to the carrier's foreign ownership may apply to modify its regulatory status from dominant to nondominant for particular routes for the provision of international communications services in accordance with the provisions of this section.

(1) Any such carrier may file a certified list of those routes it is authorized to serve for which it does not have an affiliation with a foreign carrier on the foreign end. For purposes of this paragraph *affiliation* and *foreign carrier* are defined as in §63.01(r)(1) (i) and (ii), respectively. The carrier shall file with its certified list the ownership information required by §63.01(r)(2).

(2) Any such carrier may also file a certified list of those routes for which it has an affiliation with a foreign carrier (as defined in §63.01(r)(1) (i) and (ii)) but for which it provides a specified international communications service solely through the resale of the international switched or private line services of U.S. facilities-based carriers with which the resale carrier does not have an affiliation. Such an affiliation is defined as in §63.01(r)(1)(i), except that the phrase ''U.S. facilities-based international carrier'' shall be substituted for the phrase ''foreign carrier.''

(3) Any carrier filing a certified list pursuant to paragraph (a)(2) of this section that resells international private line services on a particular named route for the provision of a particular named service must also be able to certify, and so certify, that its foreign carrier-affiliate does not own or control telecommunications facilities on the foreign end of the route. For purposes of this paragraph, ''telecommunications facilities'' are defined as in §63.18(h)(4).

(4) Any carrier filing a certified list pursuant to paragraph (a)(2) of this section must also provide the ''special concessions'' certification as required to be submitted pursuant to §63.18(i).

(5) Each carrier is responsible for the continuing accuracy of the certifications provided under paragraph (a) of this section. Whenever the substance of any certification provided under paragraphs (a)(2) or (a)(3) of this section is no longer accurate, the carrier shall as promptly as possible and in any event within 30 days file with the Secretary in duplicate a corrected certification referencing the FCC File No. under which the original certification was provided. This information may be used by the Commission to determine whether a change in regulatory status on a particular route may be warranted under §63.10. The carrier shall immediately inform the Commission if at any time the representations in the ''special concessions'' certification provided under paragraph (a)(4) of this section are no longer true. *See* §63.18(i)(2).

(b) Except as provided in paragraph (c) of this section, a complete application submitted pursuant to the provisions of paragraph (a) of this section shall be granted by the Commission 45 days after the date of public notice listing the application as accepted for filing, and the carrier filing such application may begin operating on the 46th day in accordance with the regulatory status proposed in its application and with all rules, regulations, and policies of the Commission. The Commission will subsequently issue a written order ratifying the modification of the carrier's regulatory status.

(c) The streamlined processing procedure provided by paragraph (b) of this section shall not apply where:

(1) The application is formally opposed within the meaning of § 1.1202(e) of this chapter; or

(2) The Commission has informed the applicant in writing, within 45 days after the date of public notice, that the application is not eligible for streamlined processing under this section and must be supplemented as set forth in paragraph (d) of this section.

(d) Any party that desires to modify its regulatory status from dominant to nondominant pursuant to paragraph (a) of this section, but that does not qualify for streamlined processing under this section, must request such modification by filing a petition for declaratory ruling, or by including such request in an application filed under this part requesting authority to provide service on the particular route for which such modification is desired. Any such filing should include the information specified in § 63.01(r)(7).

[57 FR 57967, Dec. 8, 1992, as amended at 61 FR 15728, Apr. 9, 1996]

EFFECTIVE DATE NOTE: At 61 FR 15728, Apr. 9, 1996, in § 63.13, paragraphs (a)(3) and (5) were amended; paragraph (a)(4) was revised. This amendment contains information collection and recordkeeping requirements and will not become effective until approval has been given by the Office of Management and Budget.

§ 63.14 Prohibition on agreeing to accept special concessions.

Any carrier authorized to provide international communications service under this part shall be prohibited from agreeing to accept special concessions directly or indirectly from any foreign carrier or administration with respect to traffic or revenue flows between the United States and any foreign country served under the authority of this part and from agreeing to enter into such agreements in the future. For purposes of this section, ''foreign carrier'' is defined as in § 63.18(h)(1)(ii) and ''special concession'' is defined as in § 63.18(i).

[61 FR 15728, Apr. 9, 1996]

EFFECTIVE DATE NOTE: At 61 FR 15728, Apr. 9, 1996, § 63.14 was revised. This section contains information collection and recordkeeping requirements and will not become effective until approval has been given by the Office of Management and Budget.

§ 63.15 Special procedures for international service providers.

(a) Any party seeking to construct, acquire or operate lines in any new major common carrier facility project or non-U.S. licensed satellite or cable system for the provision of international common carrier services shall file an application pursuant to § 63.18(e)(6). If a carrier has global Section 214 authority pursuant to the provisions of § 63.18(e)(1), and the carrier desires to use non-U.S. licensed facilities pursuant to the provisions of § 63.18(e)(1)(ii)(B), this filing requirement does not apply.

(b) Any non-dominant party certified to provide international resold private lines to a particular geographic market shall report its circuit additions on an annual basis. Circuit additions should indicate the specific services provided (*e.g.*, IMTS or private line) and the country served. This report shall be filed on a consolidated basis not later than March 31 for the preceding calendar year.

[50 FR 48203, Nov. 22, 1985; 51 FR 2708, Jan. 21, 1986. Redesignated at 57 FR 57966, Dec. 8, 1992, as amended at 60 FR 51368, Oct. 2, 1995; 61 FR 15728, Apr. 9, 1996]

EFFECTIVE DATE NOTE: At 61 FR 15728, Apr. 9, 1996, in § 63.15, the section heading and paragraph (a) were revised; paragraph (c) was removed. This amendment contains information collection and recordkeeping requirements and will not become effective until approval has been given by the Office of Management and Budget.

§63.17 Special provisions for U.S. international common carriers.

(a) Unless otherwise prohibited by the terms of its Section 214 certificate, a U.S. common carrier authorized under this part to provide international private line service, whether as a reseller or facilities-based carrier, may interconnect its authorized private lines to the public switched network on behalf of an end user customer for the end user customer's own use.

(b) Except as provided in paragraph (b)(5) of this section, a U.S. common carrier, whether a reseller or facilities-based, may engage in ''switched hubbing'' to countries not found to offer equivalent resale opportunities under §63.18(e) (3) and (4) under the following conditions:

(1) U.S.-outbound switched traffic shall be routed over the carrier's authorized U.S. international private lines to an equivalent country, and then forwarded to a third, nonequivalent country only by taking at published rates and reselling the International Message Telephone Service (IMTS) of a carrier in the equivalent country;

(2) U.S.-inbound switched traffic shall be carried to an equivalent country as part of the IMTS traffic flow from a non-equivalent third country and then terminated in the United States over U.S. international private lines from the equivalent hub country;

(3) U.S. common carriers that route U.S.-outbound traffic via switched hubbing through an equivalent country shall tariff their service on a ''through'' basis from the United States to the ultimate foreign destination.

(4) No U.S. common carrier may engage in switched hubbing under this section to a country where it has an affiliation with a foreign carrier unless and until it receives specific authority to do so under §63.18. For purposes of this paragraph, ''affiliation'' and ''foreign carrier'' are defined in §63.18(h)(1)(i)(B) and (ii), respectively.

[60 FR 67339, Dec. 29, 1995, as amended at 61 FR 15728, Apr. 9, 1996]

EFFECTIVE DATE NOTE: At 61 FR 15728, Apr. 9, 1996, in §63.17, paragraphs (b) introductory text and (4) were revised. This amendment contains information collection and recordkeeping requirements and will not become effective until approval has been given by the Office of Management and Budget.

§63.18 Contents of applications for international common carriers.

Except as otherwise provided in this part, any party seeking authority pursuant to Section 214 of the Communications Act of 1934, as amended, to construct a new line, or acquire or operate any line, or engage in transmission over or by means of such additional line for the provision of common carrier communications services between the United States, its territories or possessions, and a foreign point shall request such authority by formal application which shall be accompanied by a statement showing how the grant of the application will serve the public interest, convenience, and necessity. Such statement shall consist of the following information, as applicable:

(a) The name, address, and telephone number of each applicant;

(b) The Government, State, or Territory under the laws of which each corporate or partnership applicant is organized;

(c) The name, title, post office address, and telephone number of the officer and any other contact point, such as legal counsel, to whom correspondence concerning the application is to be addressed;

(d) A statement as to whether the applicant has previously received authority under Section 214 of the Act and, if so, a general description of the categories of facilities and services authorized (i.e., authorized to provide international switched services on a facilities basis);

(e) One or more of the following statements, as pertinent:

(1) If applying for authority to acquire interests in facilities previously authorized by the Commission in order to provide international basic switched, private line, data, television and business services to all international points, the applicant shall:

(i) State that it is requesting Section 214 authority to operate as a facilities-based carrier pursuant to the terms and conditions of paragraph (e)(1) of this section.

(ii) Comply with the following terms and conditions:

(A) Authority to provide services to all international points under this part extends only to those countries for which the applicant qualifies for non-dominant regulation as set forth in § 63.10. If an applicant is affiliated with a facilities-based foreign carrier in a destination market and the Commission has not determined that the foreign carrier does not possess market power in that market, the applicant shall not commence service on any such route unless and until it receives specific authority to do so under paragraph (e)(6) of this section. If an applicant becomes dominant on a particular route after receiving authority under this section, the terms and conditions of § 63.10(c) will apply to its provision of services on the dominant route. An applicant should file separately under Section 63.18(e)(6) to provide service on routes on which it may not qualify for regulation as a non-dominant carrier.

(B) The applicant may only provide service using half-circuits on appropriately licensed U.S. common and non-common carrier facilities (either under Title III of the Communications Act of 1934, as amended, or the Submarine Cable Landing License Act, 47 U.S.C. 34 *et. al.*) provided that these facilities do not appear on an exclusion list published by the Commission and any necessary overseas connecting facilities. Applicants may not use non-U.S. licensed facilities unless and until the Commission specifically approves their use and so indicates on the exclusion list, and only then for service to the countries indicated thereon.

(C) The applicant may provide service to any country not included on an exclusion list published by the Commission.

(D) The applicant may provide international basic switched, private line, data, television and business services.

(E) The authority granted under this paragraph shall be subject to all Commission rules and regulations and any conditions stated in the Commission's public notice or order that serves as the applicant's Section 214 certificate. *See* § 63.12.

(2) If applying for authority to resell the international services of authorized U.S. common carriers for the provision of international basic switched, private line, data, television and business services to all international points, the applicant shall:

(i) State that it is requesting Section 214 authority to operate as a resale carrier pursuant to the terms and conditions of § 63.18(e)(2).

(ii) Comply with the following the terms and conditions:

(A) The applicant may resell the international services of any authorized common carrier, except affiliated carriers regulated as dominant on the route to be served, pursuant to that carrier's tariff or contract duly filed with the Commission, for the provision of international basic switched, private line, data, television and business services to all international points;

(B) The applicant may resell private line services for the provision of international basic switched services only to countries found by the Commission to provide equivalent resale opportunities, except in circumstances where the applicant is affiliated with a facilities-based foreign carrier in a destination market and the Commission has not determined that the foreign carrier does not possess market power in that market. In such circumstances, the applicant shall not commence service on any such route unless and until it receives specific authority to do so under paragraph (e)(6) of this section. The Commission will provide public notice of its determinations.

(C) The authority granted under this paragraph shall be subject to all Commission rules and regulations and any conditions stated in the Commission's public notice or order that serves as the applicant's Section 214 certificate. *See* § 63.12.

(3) If applying for authority to resell private lines for the purpose of providing international basic switched services to countries not on the Commission's published list of equivalent countries, applicant shall demonstrate for each country to which it seeks to provide service that that country affords resale opportunities equivalent to those available under U.S. law. In this regard, applicant shall:

(i) Include evidence demonstrating that equivalent resale opportunities exist between the United States and

the subject country, including any relevant bilateral agreements between the administrations involved. Parties must demonstrate that the foreign country at the other end of the private line provides U.S.-based carriers with:

(A) The legal right to resell international private lines, interconnected at both ends, for the provision of switched services;

(B) Nondiscriminatory charges, terms and conditions for interconnection to foreign domestic carrier facilities for termination and origination of international services, with adequate means of enforcement;

(C) Competitive safeguards to protect against anticompetitive and discriminatory practices affecting private line resale; and

(D) Fair and transparent regulatory procedures, including separation between the regulator and operator of international facilities-based services.

(ii) The procedures set forth in paragraph (e)(3) of this section are subject to Commission policies on resale of international private lines in CC Docket No. 90–337 as amended in IB Docket No. 95–22.

(4) Any carrier authorized under this section to acquire and operate international private line facilities other than through resale may use those private lines to provide switched basic services to countries found by the Commission to provide equivalent resale opportunities except in circumstances where the applicant is affiliated with a facilities-based foreign carrier in the country at the foreign end of the private line, and the Commission has not determined that the foreign carrier does not possess market power in that market. In such circumstances, the applicant shall not commence service on such route unless and until it receives specific authority to do so under paragraph (e)(6) of this section. The Commission will provide public notice of its equivalency findings. The applicant is subject to all applicable Commission rules and regulations and any conditions stated in the Commission's public notice or order that serves as the applicant's Section 214 certificate. *See* § 63.12.

(i) Except as provided in paragraph (e)(4)(ii) of this section, any carrier that seeks to provide switched basic services over its authorized private line facilities to countries not identified in the Commission's published list of equivalent countries shall, for each country for which it seeks to provide switched basic service over its authorized private lines facilities, request such authority by formal application. Such application shall be accompanied by a demonstration that country affords resale opportunities equivalent to those available under U.S. law. In this regard, applicant shall include the information required by paragraph (e)(3) of this section.

(ii) No formal application is required under paragraph (e)(4) of this section in circumstances where the carrier's previously authorized private line facility is interconnected to the public switched network only on one end—either the U.S. or the foreign end—and where the carrier is not operating the facility in correspondence with a carrier that directly or indirectly owns the private line facility in the foreign country at the other end of the private line.

(5) If applying for authority to acquire facilities through the transfer of control of a common carrier holding international Section 214 authorization, or through the assignment of another carrier's existing authorization, the applicant shall complete paragraphs (a) through (d) of this section for both the transferor/assignor and the transferee/assignee. Paragraph (g) of this section is not applicable, and only the transferee/assignee needs to complete paragraphs (i) and (j) of this section. At the beginning of the application, the applicant should also include a narrative of the means by which the transfer or assignment will take place. The Commission reserves the right to request additional information as to the particulars of the transaction to aid it in making its public interest determination.

(6) If applying for authority to acquire facilities or to provide services not covered by § 63.18(e) (1) through (5), the applicant shall provide a description of the facilities and services for which it seeks authorization. Such description also shall include any additional information the Commission

shall have specified previously in an order, public notice or other official action as necessary for authorization. Applicants for new submarine cable facilities also shall include a list of the proposed owners of the cable, their voting interests and ownership interests by segment in the cable.

(f) Applicants may apply for any or all of the authority provided for in paragraph (e) of this section in the same application. The applicant may want to file separate applications for those services not subject to streamlined processing under § 63.12.

(g) Where the applicant is seeking facilities-based authority under paragraph (e)(6) of this section, a statement whether an authorization of the facilities is categorically excluded as defined by § 1.1306 of this chapter. If answered affirmatively, an environmental assessment as described in § 1.1311 of this chapter need not be filed with the application.

(h) A certification as to whether or not the applicant is, or has an affiliation with, a foreign carrier.

(1) The certification shall state with specificity each foreign country in which the applicant is, or has an affiliation with, a foreign carrier. For purposes of this certification:

(i) Affiliation is defined to include:

(A) A greater than 25 percent ownership of capital stock, or controlling interest at any level, by the applicant, or by any entity that directly or indirectly controls or is controlled by it, or that is under direct or indirect common control with it, in a foreign carrier or in any entity that directly or indirectly controls a foreign carrier; or

(B) A greater than 25 percent ownership of capital stock, or controlling interest at any level, in the applicant by a foreign carrier, or by any entity that directly or indirectly controls or is controlled by a foreign carrier, or that is under direct or indirect common control with a foreign carrier; or by two or more foreign carriers investing in the applicant in the same manner in circumstances where the foreign carriers are parties to, or the beneficiaries of, a contractual relation (*e.g.,* a joint venture or market alliance) affecting the provision or marketing of basic international telecommunications services in the United States. A U.S. carrier also will be considered to be affiliated with a foreign carrier where the foreign carrier controls, is controlled by, or is under common control with a second foreign carrier already found to be affiliated with that U.S. carrier under this section.

(ii) Foreign carrier is defined as any entity that is authorized within a foreign country to engage in the provision of international telecommunications services offered to the public in that country within the meaning of the International Telecommunication Regulations, *see* Final Acts of the World Administrative Telegraph and Telephone Conference, Melbourne, 1988 (WATTC–88), Art. 1, which includes entities authorized to engage in the provision of domestic telecommunications services if such carriers have the ability to originate or terminate telecommunications services to of from points outside their country.

(2) In support of the required certification, each applicant shall also provide the name, address, citizenship and principal businesses of its ten percent or greater direct and indirect shareholders or other equity holders and identify any interlocking directorates.

(3) Each applicant that proposes to acquire facilities through the resale of the international switched or private line services of another U.S. carrier shall additionally certify as to whether or not the applicant has an affiliation with the U.S. carrier(s) whose facilities-based service(s) the applicant proposes to resell (either directly or indirectly through the resale of another reseller's service). For purposes of this paragraph, affiliation is defined as in paragraph (h)(1)(i) of this section, except that the phrase ''U.S. facilities-based international carrier'' shall be substituted for the phrase ''foreign carrier.''

(4) Each applicant that certifies under this section that it has an affiliation with a foreign carrier and that proposes to resell the international private line services of another U.S. carrier shall additionally certify as to whether the affiliated foreign carrier owns or controls telecommunications facilities in the particular country(ies)

to which the applicant proposes to provide service (*i.e.*, the destination country(ies)). For purposes of this paragraph, telecommunications facilities are defined as the underlying telecommunications transport means, including intercity and local access facilities, used by a foreign carrier to provide international telecommunications services offered to the public.

(5) Each applicant and carrier authorized to provide international communications service under this part is responsible for the continuing accuracy of the certifications required by paragraphs (h) (3) and (4) of this section. Whenever the substance of any such certification is no longer accurate, the applicant/carrier shall as promptly as possible and in any event within thirty days file with the Secretary in duplicate a corrected certification referencing the FCC File No. under which the original certification was provided. This information may be used by the Commission to determine whether a change in regulatory status may be warranted under § 63.10.

(6) Each applicant that certifies that it is, or that it has an affiliation with, a foreign carrier, as defined in paragraphs (h)(1) (i)(B) and (ii) of this section, respectively, in a named foreign country and that seeks to operate as a U.S. facilities-based international carrier to that country from the United States shall provide information in its application filed under this part to demonstrate that either:

(i) The named foreign country (*i.e.*, the destination foreign country) provides effective competitive opportunities to U.S. carriers to compete in that country's international facilities-based market; or

(ii) Its affiliated foreign carrier does not have the ability to discriminate against unaffiliated U.S. international carriers through control of bottleneck services or facilities in the destination country.

(A) The demonstration specified in paragraph (h)(6)(i) of this section should address the following factors:

(*1*) The legal ability of U.S. carriers to enter the foreign market and provide facilities-based international services, in particular international message telephone service (IMTS);

(*2*) Whether there exist reasonable and nondiscriminatory charges, terms and conditions for interconnection to a foreign carrier's domestic facilities for termination and origination of international services;

(*3*) Whether competitive safeguards exist in the foreign country to protect against anticompetitive practices, including safeguards such as:

(*i*) Existence of cost-allocation rules in the foreign country to prevent cross-subsidization;

(*ii*) Timely and nondiscriminatory disclosure of technical information needed to use, or interconnect with, carriers' facilities; and

(*iii*) Protection of carrier and customer proprietary information;

(*4*) Whether there is an effective regulatory framework in the foreign country to develop, implement and enforce legal requirements, interconnection arrangements and other safeguards; and

(*5*) Any other factors the applicant deems relevant to its demonstration.

(B) The demonstration specified in paragraph (h)(6)(ii) of this section should include the same information requested by paragraph (h)(8) of this section.

(7) Each applicant that certifies that it is, or that it has an affiliation with, a foreign carrier, as defined in paragraph (h)(1) (i)(B) and (ii) of this section, respectively, in a named foreign country and that proposes to resell the international switched or non-interconnected private line services, respectively, of another U.S. carrier for the purpose of providing international communications services to the named foreign country from the United States shall provide information in its application filed under this part to demonstrate that either:

(i) The named foreign country (*i.e.*, the destination foreign country) provides effective competitive opportunities to U.S. carriers to resell international switched or non-interconnected private line services, respectively; or

(ii) Its affiliated foreign carrier does not have the ability to discriminate against unaffiliated U.S. international carriers through control of bottleneck services or facilities in the destination country.

(A) The demonstration specified in paragraph (h)(7)(i) of this section should address the following factors:

(*1*) The legal ability of U.S. carriers to enter the foreign market and provide resold international switched services (for switched resale applications) or non-interconnected private line services (for non-interconnected private line resale applications);

(*2*) Whether there exist reasonable and nondiscriminatory charges, terms and conditions for the provision of the relevant resale service;

(*3*) Whether competitive safeguards exist in the foreign country to protect against anticompetitive practices, including safeguards such as:

(*i*) Existence of cost-allocation rules in the foreign country to prevent cross-subsidization;

(*ii*) Timely and nondiscriminatory disclosure of technical information needed to use, or interconnect with, carriers' facilities; and

(*iii*) Protection of carrier and customer proprietary information;

(*4*) Whether there is an effective regulatory framework in the foreign country to develop, implement and enforce legal requirements, interconnection arrangements and other safeguards; and

(*5*) Any other factors the applicant deems relevant to its demonstration.

(B) The demonstration specified in paragraph (h)(7)(ii) of this section should include the same information requested in paragraph (h)(8) of this section.

(8) Each applicant that certifies that it has an affiliation with a foreign carrier in a named foreign country and that desires to be regulated as non-dominant for the provision of international communications service to that country may provide information in its application filed under this part to demonstrate that its affiliated foreign carrier does not have the ability to discriminate against unaffiliated U.S. international carriers through control of bottleneck services or facilities in the named foreign country. *See* § 63.10, Regulatory Classification of U.S. International Carriers.

(i) Such a demonstration should address the factors that relate to the scope or degree of the foreign affiliate's bottleneck control, such as:

(A) The monopoly, duopoly, or oligopoly status of the destination country; and

(B) Whether the foreign affiliate has the potential to discriminate against unaffiliated U.S. international carriers through such means as preferential operating agreements, preferential routing of traffic, exclusive or more favorable transiting agreements, or preferential domestic access and interconnection arrangements.

(ii) Such a demonstration may also address other factors the applicant deems relevant, such as the effectiveness of regulation in the destination country.

(i) Each applicant shall certify that the applicant has not agreed to accept special concessions directly or indirectly from any foreign carrier or administration with respect to traffic or revenue flows between the U.S. and any foreign country which the applicant may serve under the authority granted under this part and will not enter into such agreements in the future.

(1) For purposes of paragraph (i) of this section, and of §§ 63.11(c)(2)(iii), 63.13(a)(4), and 63.14, special concession is defined as any arrangement that affects traffic or revenue flows to or from the United States that is offered exclusively by a foreign carrier or administration to a particular U.S. international carrier and not also to similarly situated U.S. international carriers authorized to serve a particular route.

(2) The special concessions certification required by paragraph (i) of this section and by §§ 63.11(c)(2)(iii) and 63.13(a)(4) shall be viewed as an ongoing representation to the Commission, and applicants/carriers shall immediately inform the Commission if at any time the representations in their certifications are no longer true. Failure to so inform the Commission will be deemed a material misrepresentation to the Commission.

(j) A certification pursuant to §§ 1.2001 through 1.2003 of this chapter that no party to the application is subject to a denial of Federal benefits pursuant to Section 5301 of the Anti-Drug Abuse Act of 1988. *See* 21 U.S.C. 853a.

NOTE 1 TO PARAGRAPH (h): The word ''control'' as used in this section is not limited to

majority stock ownership, but includes actual working control in whatever manner exercised.

NOTE 2 TO PARAGRAPH (h): The term ''facilities-based carrier'' as used in this section means one that holds an ownership, indefeasible-right-of-user, or leasehold interest in bare capacity in an international facility, regardless of whether the underlying facility is a common or non-common carrier submarine cable, or an INTELSAT or separate satellite system.

NOTE 3 TO PARAGRAPH (h): The assessment of ''capital stock'' ownership will be made under the standards developed in Commission case law for determining such ownership. *See, e.g., Fox Television Stations, Inc.,* 10 FCC Rcd 8452 (1995). ''Capital stock'' includes all forms of equity ownership, including partnership interests.

NOTE 4 TO PARAGRAPH (h): Ownership and other interests in U.S. and foreign carriers will be attributed to their holders and deemed cognizable pursuant to the following criteria: Attribution of ownership interests in a carrier that are held indirectly by any party through one or more intervening corporations will be determined by successive multiplication of the ownership percentages for each link in the vertical ownership chain and application of the relevant attribution benchmark to the resulting product, except that wherever the ownership percentage for any link in the chain exceeds 50 percent, it shall not be included for purposes of this multiplication. For example, if A owns 30 percent of company X, which owns 60 percent of company Y, which owns 26 percent of ''carrier,'' then X's interest in ''carrier'' would be 26 percent (the same as Y's interest because X's interest in Y exceeds 50 percent), and A's interest in ''carrier'' would be 7.8 percent (0.30 x 0.26). Under the 25 percent attribution benchmark, X's interest in ''carrier'' would be cognizable, while A's interest would not be cognizable.

[61 FR 15729, Apr. 9, 1996]

EFFECTIVE DATE NOTE: At 61 FR 15729, Apr. 9, 1996, §63.18 was added. This section contains information collection and recordkeeping requirements and will not become effective until approval has been given by the Office of Management and Budget.

§63.19 Special procedures for discontinuances of international services.

(a) Any non-dominant international carrier as this term is defined in §63.10 that seeks to discontinue, reduce or impair service, including the retiring of international facilities, dismantling or removing of international trunk lines, shall be subject to the following procedures in lieu of those specified in §§63.61 through 63.601:

(1) The carrier shall notify all affected customers of the planned discontinuance, reduction or impairment at least 60 days prior to its planned action. Notice shall be in writing to each affected customer unless the Commission authorizes in advance, for good cause shown, another form of notice.

(2) The carrier shall file with this Commission a copy of the notification on or after the date on which notice has been given to all affected customers.

(b) Any dominant international carrier as this term is defined in §63.10 that seeks to retire international facilities, dismantle or remove international trunk lines, and the services being provided through these facilities are not being discontinued, reduced or impaired, shall only be subject to the notification requirements of paragraph (a) of this section. If such carrier discontinues, reduces or impairs service to a community or retires facilities that impair or reduce service to a community, the dominant carrier shall file an application pursuant to §§63.62 and 63.500.

[61 FR 15732, Apr. 9, 1996]

EFFECTIVE DATE NOTE: At 61 FR 15732, Apr. 9, 1996, §63.19 was added. This section contains information collection and recordkeeping requirements and will not become effective until approval has been given by the Office of Management and Budget.

§63.20 Copies required; fees; and filing periods for international service providers.

(a) Unless otherwise specified the Commission shall be furnished with an original and five copies of applications filed for international facilities and services under Section 214 of the Communications Act of 1934, as amended. Provided, however, that where applications involve only the supplementation of existing international facilities, and the issuance of a certificate is not required, an original and two copies of the application shall be furnished. Upon request by the Commission, additional copies of the application shall be furnished. Each application shall be accompanied by the fee prescribed in subpart G of part 1 of this chapter.

(b) No application accepted for filing and subject to the provisions of §§ 63.02, 63.18, 63.62 or § 63.505 shall be granted by the Commission earlier than 28 days following issuance of public notice by the Commission of the acceptance for filing of such application or any major amendment unless said public notice specifies another time period, or the application qualifies for streamlined processing pursuant to § 63.12.

(c) No application accepted for filing and subject to the streamlined processing provisions of § 63.12 shall be granted by the Commission earlier than 21 days following issuance of public notice by the Commission of the acceptance for filing of such application or any major amendment unless said public notice specifies another time period.

(d) Any interested party may file a petition to deny an application within the 21 day or other time period specified in paragraphs (b) or (c) of this section. The petitioner shall serve a copy of such petition on the applicant no later than the date of filing thereof with the Commission. The petition shall contain specific allegations of fact sufficient to show that the petitioner is a party in interest and that a grant of the application would be prima facie inconsistent with the public interest, convenience and necessity. Such allegations of fact shall, except for those of which official notice may be taken, be supported by affidavit of a person or persons with personal knowledge thereof. The applicant may file an opposition to any petition to deny within 14 days after the original pleading is filed. The petitioner may file a reply to such opposition within seven days after the time for filing oppositions has expired. Allegations of facts or denials thereof shall similarly be supported by affidavit. These responsive pleadings shall be served on the applicant or petitioner, as appropriate, and other parties to the proceeding.

[61 FR 15732, Apr. 9, 1996]

EFFECTIVE DATE NOTE: At 61 FR 15732, Apr. 9, 1996, § 63.20 was added. This section contains information collection and recordkeeping requirements and will not become effective until approval has been given by the Office of Management and Budget.

§ 63.21 Conditions applicable to international Section 214 authorizations.

International carriers authorized under Section 214 of the Communications Act of 1934, as amended, must follow the following requirements and prohibitions:

(a) Carriers may not resell private lines for the provision of international switched services unless the country at the foreign end of the private line is deemed equivalent. *See* § 63.18(e) (3) through (4).

(b) Carriers must file copies of operating agreements entered into with their foreign correspondents within 30 days of their execution, and shall otherwise comply with the filing requirements contained in § 43.51 of this chapter.

(c) Carriers must file tariffs pursuant to Section 203 of the Communications Act, 47 U.S.C. 203, and part 61 of this chapter.

(d) Carriers must file annual reports of overseas telecommunications traffic as required by § 43.61 of this chapter.

(e) Carriers regulated as dominant must provide the Commission with the following information within 30 days after conveyance of transmission capacity on submarine cables to other U.S. carriers:

(1) The name of the party to whom the capacity was conveyed;

(2) The name of the facility in which capacity was conveyed;

(3) The amount of capacity that was conveyed; and

(4) The price of the capacity conveyed.

[61 FR 15732, Apr. 9, 1996]

EFFECTIVE DATE NOTE: At 61 FR 15732, Apr. 9, 1996, § 63.21 was added. This section contains information collection and recordkeeping requirements and will not become effective until approval has been given by the Office of Management and Budget.

GENERAL PROVISIONS RELATING TO ALL APPLICATIONS UNDER SECTION 214

§ 63.50 Amendment of applications.

Any application may be amended as a matter of right prior to the date of any final action taken by the Commission or designation for hearing. Amendments to applications shall be signed and submitted in the same manner, and

with the same number of copies as was the original application. If a petition to deny or other formal objections have been filed to the application, the amendment shall be served on the parties.

(Sec. 303, 48 Stat. 1082, as amended; 47 U.S.C. 303)

[41 FR 20662, May 20, 1976]

§63.51 Additional information.

The applicant shall furnish any additional information which the Commission may require after a preliminary examination of the application or request. Where an applicant fails to respond to official correspondence or request for additional material, the application may be dismissed without prejudice.

(Sec. 303, 48 Stat. 1082, as amended; 47 U.S.C. 303)

[41 FR 20662, May 20, 1976]

§63.52 Copies required; fees; and filing periods for domestic authorizations.

(a) Unless otherwise specified the Commission shall be furnished with an original and 5 copies of applications filed under section 214 of the Communications Act of 1934, as amended; Provided, however, that where applications involve only the supplementation of existing domestic facilities, and the issuance of a certificate is not required, an original and 2 copies of the application shall be furnished. Upon request by the Commission additional copies of the application shall be furnished. Each application shall be accompanied by the fee prescribed in subpart G of part 1 of this chapter.

(b) No application accepted for filing and subject to the provisions of §§63.01, 63.02, 64.62 (with the exception of 63.62(c)), 63.69, 63.91, 63.502, or 63.505 of the rules shall be granted by the Commission earlier than 30 days following issuance of public notice by the Commission of the acceptance for filing of such application or any major amendment unless said public notice specifies another time period.

(c) Any interested party may file a petition to deny an application within the 30–day or other time period specified in paragraph (b) of this section. The petitioner shall serve a copy of such petition on the applicant no later than the date of filing thereof with the Commission. The petition shall contain specific allegations of fact sufficient to show that the petitioner is a party in interest and that a grant of the application would be prima facie inconsistent with the public interest, convenience and necessity. Such allegations of fact shall, except for those of which official notice may be taken, be supported by affidavit of a person or persons with personal knowledge thereof. The applicant may file an opposition to any petition to deny, and the petitioners may file a reply to such opposition (see §1.45 of this chapter), and allegations of facts or denials thereof shall similarly be supported by affidavit. These responsive pleadings shall be served on the applicant or petitioners, as appropriate, and other parties to the proceeding.

(Sec. 303, 48 Stat. 1082, as amended; 47 U.S.C. 303)

[41 FR 20662, May 20, 1976; 41 FR 22274, June 2, 1976, as amended at 42 FR 36459, July 15, 1977; 61 FR 10476, Mar. 14, 1996]

§63.53 Form.

(a) Applications under Section 214 of the Communications Act shall be submitted on paper not more than 21.6 cm (8.5 in) wide and not more than 35.6 cm (14 in) long with a left-hand margin of 4 cm (1.5 in). This requirement shall not apply to original documents, or admissible copies thereof, offered as exhibits or to specially prepared exhibits. The impression shall be on one side of the paper only and shall be double-spaced, except that long quotations shall be single-spaced and indented. All papers, except charts and maps, shall be typewritten or prepared by mechanical processing methods, other than letter press, or printed. The foregoing shall not apply to official publications. All copies must be clearly legible.

(b) Applications submitted under Section 214 of the Communications Act for international services may be submitted on computer diskettes pursuant to a filing manual compiled by the International Bureau, but a paper copy of the application with the original signature must accompany the diskette. The manual will specify the type and

format of the computer diskettes and the reporting and procedural requirements for such applications.

(c) Applications submitted under Section 214 of the Communications Act for international services and any related pleadings that are in a foreign language shall be accompanied by a certified translation in English.

[61 FR 15733, Apr. 9, 1996]

EFFECTIVE DATE NOTE: At 61 FR 15733, Apr. 9, 1996, § 63.53 was revised. This section contains information collection and recordkeeping requirements and will not become effective until approval has been given by the Office of Management and Budget.

DISCONTINUANCE, REDUCTION, OUTAGE AND IMPAIRMENT

§ 63.60 Definitions.

For the purposes of this part, the following definitions shall apply:

(a) *Discontinuance, reduction, or impairment of service* includes, but is not limited to the following:

(1) The closure by a carrier of a telephone exchange rendering interstate or foreign telephone toll service, a public toll station serving a community or part of a community, or a public coast station as defined in § 80.5 of this chapter;

(2) The reduction in hours of service by a carrier at a telephone exchange rendering interstate or foreign telephone toll service, at any public toll station (except at a toll station at which the availability of service to the public during any specific hours is subject to the control of the agent or other persons controlling the premises on which such office or toll station is located and is not subject to the control of such carrier), or at a public coast station; the term *reduction in hours of service* does not include a shift in hours which does not result in any reduction in the number of hours of service.

(3) [Reserved]

(4) The dismantling or removal from service of any trunk line by a carrier which has the effect of impairing the adequacy or quality of service rendered to any community or part of a community;

(5) The severance by a carrier of physical connection with another carrier (including connecting carriers as defined in section 3(u) of the Communications Act of 1934, as amended) or the termination or suspension of the interchange of traffic with such other carrier;

(b) *Emergency discontinuance, reduction, or impairment of service* means any discontinuance, reduction, or impairment of the service of a carrier occasioned by conditions beyond the control of such carrier where the original service is not restored or comparable service is not established within a reasonable time. For the purpose of this part, a reasonable time shall be deemed to be a period not in excess of the following: 10 days in the case of discontinuance, reduction, or impairment of service at telegraph offices operated directly by the carrier; 15 days in the case of jointly-operated or agency telegraph offices; 10 days in the case of public coast stations; and 60 days in all other cases;

(c) *Public toll station* means a public telephone station, located in a community, through which a carrier provides service to the public, and which is connected directly to a toll line operated by such carrier.

[28 FR 13229, Dec. 5, 1963, as amended at 45 FR 6585, Jan. 29, 1980; 51 FR 31305, Sept. 2, 1986]

§ 63.61 Applicability.

Any carrier subject to the provisions of section 214 of the Communications Act of 1934, as amended, except any non-dominant carrier as this term is defined in § 61.15(a) of this chapter, proposing to discontinue, reduce, or impair interstate or foreign telephone or telegraph service to a community, or a part of a community, shall request authority therefor by formal application or informal request as specified in the pertinent sections of this part: *Provided, however,* That where service is expanded on an experimental basis for a temporary period of not more than 6 months, no application shall be required to reduce service to its status prior to such expansion but a written notice shall be filed with the Commission within 10 days of the reduction showing (a) date on which, places at which, and extent to which service was expanded and (b) date on which, places

at which, and extent to which such expansion of service was discontinued:

And provided further, That a licensee of a radio station who has filed an application for authority to discontinue service provided by such station shall during the period that such application is pending before the Commission, continue to file appropriate applications as may be necessary for extension or renewal of station license in order to provide legal authorization for such station to continue in operation pending final action on the application for discontinuance of service.

[28 FR 13229, Dec. 5, 1963, as amended at 45 FR 76169, Nov. 18, 1980]

§63.62 Type of discontinuance, reduction, or impairment of telephone or telegraph service requiring formal application.

Authority for the following types of discontinuance, reduction, or impairment of service shall be requested by formal application containing the information required by the Commission in the appropriate sections to this part, except as provided in paragraph (c) of this section, or in emergency cases (as defined in §63.60(b)) as provided in §63.63:

(a) The dismantling or removal of a trunk line (for contents of application *see* §63.500) for all domestic carriers and for dominant international carriers except as modified in §63.19;

(b) The severance of physical connection or the termination or suspension of the interchange of traffic with another carrier (for contents of application, see §63.501);

(c) [Reserved]

(d) The closure of a public toll station where no other such toll station of the applicant in the community will continue service (for contents of application, see §63.504): *Provided, however,* That no application shall be required under this part with respect to the closure of a toll station located in a community where telephone toll service is otherwise available to the public through a telephone exchange connected with the toll lines of a carrier;

(e) Any other type of discontinuance, reduction or impairment of telephone service not specifically provided for by other provisions of this part (for contents of application, see §63.505);

(f) An application may be filed requesting authority to make a type of reduction in service under specified standards and conditions in lieu of individual applications for each instance coming within the type of reduction in service proposed.

[28 FR 13229, Dec. 5, 1963, as amended at 45 FR 6585, Jan. 29, 1980; 60 FR 35509, July 10, 1995; 61 FR 15733, Apr. 9, 1996]

EFFECTIVE DATE NOTE: At 61 FR 15733, Apr. 9, 1996, in §63.62, paragraph (a) was revised. This amendment contains information collection and recordkeeping requirements and will not become effective until approval has been given by the Office of Management and Budget.

§63.63 Emergency discontinuance, reduction or impairment of service.

(a) Application for authority for emergency discontinuance, reduction, or impairment of service shall be made by filing an informal request in quintuplicate as soon as practicable but not later than 15 days in the case of public coast stations; or 65 days in all other cases, after the occurrence of the conditions which have occasioned the discontinuance, reduction, or impairment. The request shall make reference to this section and show the following:

(1) The effective date of such discontinuance, reduction, or impairment, and the identification of the service area affected;

(2) The nature and estimated duration of the conditions causing the discontinuance, reduction, or impairment;

(3) The facts showing that such conditions could not reasonably have been foreseen by the carrier in sufficient time to prevent such discontinuance, reduction, or impairment;

(4) A description of the service involved;

(5) The nature of service which will be available or substituted;

(6) The effect upon rates to any person in the community;

(7) The efforts made and to be made by applicant to restore the original service or establish comparable service as expeditiously as possible.

(b) Authority for the emergency discontinuance, reduction, or impairment of service for a period of 60 days shall

be deemed to have been granted by the Commission effective as of the date of the filing of the request unless, on or before the 15th day after the date of filing, the Commission shall notify the carrier to the contrary. Renewal of such authority may be requested by letter or telegram, filed with the Commission not later than 10 days prior to the expiration of such 60–day period, making reference to this section and showing that such conditions may reasonably be expected to continue for a further period and what efforts the applicant has made to restore the original or establish comparable service. If the same or comparable service is reestablished before the termination of the emergency authorization, the carrier shall notify the Commission promptly. However, the Commission may, upon specific request of the carrier and upon a proper showing, contained in such informal request, authorize such discontinuance, reduction, or impairment of service for an indefinite period or permanently.

[28 FR 13229, Dec. 5, 1963, as amended at 45 FR 6585, Jan. 29, 1980]

§ 63.65 Closure of public toll station where another toll station of applicant in the community will continue service.

(a) Except in emergency cases (as defined in § 63.60(b) and as provided in § 63.63), authority to close a public toll station in a community in which another toll station of the applicant will continue service shall be requested by an informal request, filed in quintuplicate, making reference to this paragraph and showing the following:

(1) Location of toll station to be closed and distance from nearest toll station to be retained;

(2) Description of service area affected, including approximate population and character of the business of the community;

(3) Average number of toll telephone messages sent-paid and received-collect for the preceding six months;

(4) Average number of telegraph messages sent-paid and received-collect for the preceding six months;

(5) Statement of reasons for desiring to close the station.

(b) Authority for closures requested under paragraph (a) of this section shall be deemed to have been granted by the Commission effective as of the 15th day following the date of filing such request unless, on or before the 15th day, the Commission shall notify the carrier to the contrary.

§ 63.66 Closure of or reduction of hours of service at telephone exchanges at military establishments.

Where a carrier desires to close or reduce hours of service at a telephone exchange located at a military establishment because of the deactivation of such establishment, it may, in lieu of filing formal application, file in quintuplicate an informal request. Such request shall make reference to this section and shall set forth the class of office, address, date of proposed closure or reduction, description of service to remain or be substituted, statement as to any difference in charges to the public, and the reasons for the proposed closure or reduction. Authority for such closure or reduction shall be deemed to have been granted by the Commission, effective as of the 15th day following the date of filing of such request, unless, on or before the 15th day, the Commission shall notify the carrier to the contrary.

[45 FR 6585, Jan. 29, 1980]

§ 63.71 Special procedures for discontinuance, reduction or impairment of service by domestic non-dominant carriers.

Any non-dominant carrier as this term is defined in § 61.15(a) of this chapter and who seeks to discontinue, reduce or impair service shall be subject to the following procedures in lieu of those specified in §§ 63.61 through 63.62 and 63.64 through 63.601:

(a) The carrier shall notify all affected customers of the planned discontinuance, reduction or impairment. Notice shall be in writing to each affected customer unless the Commission authorizes in advance, for good cause shown, another form of notice. Notice shall include the following:

(1) Name and address of carrier;

(2) Date of planned service discontinuance, reduction or impairment;

(3) Points or geographic areas of service affected;

(4) Brief description of type of service affected; and

(5) The following statement:

The FCC will normally authorize this proposed discontinuance of service (or reduction or impairment) unless it is shown that customers would be unable to receive service or a reasonable substitute from another carrier. If you wish to object, you should file your comments within 15 days after receipt of this notification. Address them to the Federal Communications Commission, Washington, DC 20554, referencing the §63.71 Application of (carrier's name). Comments should include specific information about the impact of this proposed discontinuance (or reduction or impairment) upon you or your company, including any inability to acquire reasonable sustitute service.

(b) The carrier shall file with this Commission, on or after the date on which notice has been given to all affected customers an application which shall contain the following:

(1) Caption—''Section 63.71 Application'';

(2) Information listed in §63.71(a)(1) through (4) above;

(3) Brief description of the dates and methods of notice to all affected customers; and

(4) Any other information the Commission may require.

(c) The application to discontinue, reduce or impair service shall be automatically granted on the 31st day after its filing with the Commission without any Commission notification to the applicant unless the Commission has notified the applicant that the grant will not be automatically effective.

[45 FR 76169, Nov. 18, 1980]

§63.90 Publication and posting of notices.

(a) Immediately upon the filing of an application or informal request (except a request under §63.71) for authority to close or otherwise discontinue the operation, or reduce the hours of service at a telephone exchange (except an exchange located at a military establishment), the applicant shall post a public notice at least 51 cm by 61 cm (20 inches by 24 inches), with letter of commensurate size, in a conspicuous place in the exchange affected, and also in the window of any such exchange having window space fronting on a public street at street level. Such notice shall be posted at least 14 days and shall contain the following information, as may be applicable:

(1) Date of first posting of notice;

(2) Name of applicant;

(3) A statement that application has been made to the Federal Communications Commission;

(4) Date when application was filed in the Commission;

(5) A description of the discontinuance, reduction, or impairment of service for which authority is sought including the address or other appropriate identification of the exchange or station involved;

(6) If applicant proposes to reduce hours of service, a description of present and proposed hours of service;

(7) A complete description of the substitute service, if any, to be provided if the application is granted.

(8) A statement that any member of the public desiring to protest or support the application may communicate in writing with the Federal Communications Commission, Washington, DC 20554, on or before a specified date which shall be 20 days from the date of first posting of the notice.

(b) Immediately upon the filing of an application or informal request of the nature described in paragraph (a) of this section, the applicant shall also cause to be published a notice of not less than 10 column centimeters (4 column inches) in size containing information similar to that specified in paragraph (a), at least once during each of 2 consecutive weeks, in some newspaper of general circulation in the community or part of the community affected.

(c) Immediately upon the filing of an application or informal request or upon the filing of a formal application to close a public toll station (except a toll station located at a military establishment), applicant shall post a public notice at least A3 (29.7 cm x 42.0 cm) or 11 in x 17 in (27.9 cm x 43.2 cm) in size as provided in paragraph (a) of this section or, in lieu thereof, applicant shall cause to be published a newspaper notice as provided in paragraph (b) of this section.

(d) Immediately upon the filing of any application or informal request for authority to discontinue, reduce, or impair service, or any notice of resumption of service under § 63.63(b), the applicant shall give written notice of the filing together with a copy of such application to the State Commission (as defined in section 3(t) of the Communications Act of 1934, as amended) of each State in which any discontinuance, reduction or impairment is proposed.

(e) When the posting, publication, and notification as required in paragraphs (a), (b), (c) and (d) of this section have been completed, applicant shall report such fact to the Commission, stating the name of the newspaper in which publication was made, the name of the Commissions notified, and the dates of posting, publication, and notification.

[45 FR 6585, Jan. 29, 1980, as amended at 45 FR 76169, Nov. 18, 1980; 58 FR 44907, Aug. 25, 1993; 60 FR 35510, July 10, 1995]

§ 63.100 Notification of service outage.

(a) As used in this section:

(1) *Outage* is defined as a significant degradation in the ability of a customer to establish and maintain a channel of communications as a result of failure or degradation in the performance of a carrier's network.

(2) *Customer* is defined as a user purchasing telecommunications service from a common carrier.

(3) *Special offices and facilities* are defined as major airports, major military installations, key government facilities, and nuclear power plants. 911 special facilities are addressed separately in paragraph (a)(4) of this section.

(4) *An outage which potentially affects a 911 special facility* is defined as a significant service degradation, switch or transport, where rerouting to the same or an alternative answering location was not implemented, and involves one or more of the following situations:

(i) Isolation of one or more Public Service Answering Points (PSAPs) for 24 hours or more, if the isolated PSAPs collectively serve less than 30,000 or more access lines, based on the carrier's database of lines served by each PSAP; or

(ii) Loss of call processing capabilities in the E911 tandem(s), for 30 minutes or more, regardless of the number of customers affected; or

(iii) Isolation of one or more PSAP(s), for 30 or more minutes, if the isolated PSAPs collectively serve 30,000 or more access lines, based on the carrier's database of lines served by each PSAP; or

(iv) Isolation of an end office switch or host/remote cluster, for 30 minutes or more, if the switches collectively serve, 30,000 or more access lines.

(5) *Major airports* are defined as those airports described by the Federal Aviation Administration as large or medium hubs. The member agencies of the National Communications System (NCS) will determine which of their locations are ''major military installations'' and ''key government facilities.''

(6) *An outage which ''potentially affects'' a major airport* is defined as an outage that disrupts 50% or more of the air traffic control links or other FAA communications links to any major airport, any outage that has caused an Air Route Traffic Control Center (ARTCC) or major airport to lose it radar, any ARTCC or major airport outage that has received any media attention of which the carrier's reporting personnel are aware, any outage that causes a loss of both primary and backup facilities at any ARTCC or major airport, and any outage to an ARTCC or major airport that is deemed important by the FAA as indicated by FAA inquiry to the carrier management personnel.

(7) *A mission-affecting outage* is defined as an outage that is deemed critical to national security/emergency preparedness (NS/EP) operations of the affected facility by the National Communications System member agency operating the affected facility.

(b) Any local exchange or interexchange common carrier or competitive access provider that operates transmission or switching facilities and provides access service or interstate or international telecommunications service, that experiences an outage which potentially affects 50,000 or more of its customers on any facilities which it owns, operates or leases,

must notify the Commission if such outage continues for 30 or more minutes. Satellite carriers and cellular carriers are exempt from this reporting requirement. Notification must be served on the Commission's Monitoring Watch Officer, on duty 24 hours a day in the FCC headquarters building in Washington, DC, or on a secondary basis it may be served on the Commission's Watch Officer on duty at the FCC's facility at Grand Island, Nebraska. The notification must be by facsimile or other record means delivered within 120 minutes of the carrier's first knowledge that the service outage potentially affects 50,000 or more customers, if the outage continues for 30 or more minutes. Notification shall identify a contact person who can provide further information, the telephone number at which the contact person can be reached, and what information is known at the time about the service outage including: the date and estimated time (local time at the location of the outage) of commencement of the outage; the geographic area affected; the estimated number of customers affected; the types of services affected (e.g. interexchange, local, cellular); the duration of the outage, i.e. time elapsed from the estimated commencement of the outage until restoration of full service; the estimated number of blocked calls during the outage; the apparent or known cause of the incident, including the name and type of equipment involved and the specific part of the network affected; methods used to restore service; and the steps taken to prevent recurrences of the outage. When specifying the types of services affected by any reportable outage, carriers must indicate when 911 service was disrupted and rerouting to alternative answering locations was not implemented. The report shall be captioned Initial Service Disruption Report. Lack of any of the above information shall not delay the filing of this report. Not later than thirty days after the outage, the carrier shall file with the Chief, Common Carrier Bureau, a Final Service Disruption Report providing all available information on the service outage, including any information not contained in its Initial Service Disruption Report and detailing specifically the root cause of the outage and listing and evaluating the effectiveness and application in the immediate case of any best practices or industry standards identified by the Network Reliability Council to eliminate or ameliorate outages of the reported type.

(c) Any local exchange or interexchange common carrier or competitive access provider that operates transmission or switching facilities and provides access service or interstate or international telecommunications service, that experiences an outage which potentially affects at least 30,000 and less than 50,000 of its customers on any facilities which it owns, operates or leases, must notify the Commission if such outage continues for 30 or more minutes. Satellite carriers and cellular carriers are exempt from this reporting requirement. Notification must be served on the Commission's Monitoring Watch Officer, on duty 24 hours a day in the FCC headquarters building in Washington, DC, or on a secondary basis it may be served on the Commission's Watch Officer on duty at the FCC's facility at Grand Island, Nebraska. The notification must be by facsimile or other record means delivered within 3 days of the carrier's first knowledge that the service outage potentially affects at least 30,000 but less than 50,000 customers, if the outage continues for 30 or more minutes.

Notification shall identify the carrier and a contact person who can provide further information, the telephone number at which the contact person can be reached, and what information is known at the time about the service outage including: the date and estimated time (local time at the location of the outage) of commencement of the outage; the geographic area affected; the estimated number of customers affected; the types of services affected (*e.g.* interexchange, local, cellular); the duration of the outage, *i.e.* time elapsed from the estimated commencement of the outage until restoration of full service; the estimated number of blocked calls during the outage; the apparent or known cause of the incident, including the name and type of equipment involved and the specific part of

the network affected; methods used to restore service; and the steps taken to prevent recurrences of the outage. When specifying the types of services affected by any reportable outage, carriers must indicate when 911 service was disrupted and rerouting to alternative answering locations was not implemented. The report shall be captioned Initial Service Disruption Report. Lack of any of the above information shall not delay the filing of this report. Not later than thirty days after the outage, the carrier shall file with the Chief, Common Carrier Bureau, a Final Service Disruption Report providing all available information on the service outage, including any information not contained in its Initial Service Disruption Report and detailing specifically the root cause of the outage and listing and evaluating the effectiveness and application in the immediate case of any best practices or industry standards identified by the Network Reliability Council to eliminate or ameliorate outages of the reported type.

(d) Any local exchange or interexchange carrier or competitive access provider that operates transmission or switching facilities and provides access service or interstate or international telecommunications service that experiences a fire-related incident in any facilities which it owns, operates or leases that impacts 1000 or more service lines must notify the Commission if the incident continues for a period of 30 minutes or longer. Satellite carriers and cellular carriers are exempt from this reporting requirement. Notification must be served on the Commission's Monitoring Watch Officer, on duty 24 hours a day in the FCC headquarters building in Washington, DC, or on a secondary basis it may be served on the Commission's Watch Officer on duty at the FCC's facility at Grand Island, Nebraska. The notification must be by facsimile or other recorded means delivered within 3 days of the carrier's first knowledge that the incident is fire-related, impacting 1000 or more lines for thirty or more minutes. Notification shall identify the carrier and a contact person who can provide further information, the telephone number at which the contact person can be reached, and what information is known at the time about the service outage including: the date and estimated time (local time at the location of the outage) of commencement of the outage; the geographic area affected; the estimated number of customers affected; the types of services affected (*e.g.* interexchange, local cellular); the duration of the outage, *i.e.* time elapsed from the estimated commencement of the outage until restoration of full service; the estimated number of blocked calls during the outage; the apparent or known cause of the incident, including the name and type of equipment involved and the specific part of the network affected; methods used to restore service; and the steps taken to prevent recurrences of the outage. When specifying the types of services affected by any reportable outage, carriers must indicate when 911 service was disrupted and rerouting to alternative answering locations was not implemented. The report shall be captioned Initial Service Disruption Report. Lack of any of the above information shall not delay the filing of this report. Not later than thirty days after the incident, the carrier shall file with the Chief, Common Carrier Bureau, a Final Report providing all available information on the incident, including any information not contained in its Initial Report and detailing specifically the root cause of the incident and listing and evaluating the effectiveness and application in the immediate case of any best practices or industry standards identified by the Network Reliability Council to eliminate or ameliorate incidents of the reported type.

(e) Any local exchange or interexchange common carrier or competitive access provider that operates transmission or switching facilities and provides access service or interstate or international telecommunications service, that experiences an outage on any facilities which it owns, operates or leases which potentially affects special offices and facilities must notify the Commission if such outage continues for 30 or more minutes regardless of the number of customers affected. Satellite carriers and cellular carriers are exempt from this reporting requirement. Notification must be

served on the Commission's Monitoring Watch Officer, on duty 24 hours a day in the FCC headquarters building in Washington, DC, or on a secondary basis it may be served on the Commission's Watch Officer on duty at the FCC's facility at Grand Island, Nebraska. The notification must be by facsimile or other record means delivered within 120 minutes of the carrier's first knowledge that the service outage potentially affects a special facility, if the outage continues for 30 or more minutes. Notification shall identify a contact person who can provide further information, the telephone number at which the contact person can be reached, and what information is known at the time about the service outage including: the date and estimated time (local time at the location of the outage) of commencement of the outage; the geographic area affected; the estimated number of customers affected; the types of services affected (*e.g.* 911 emergency services, major airports); the duration of the outage, *i.e.* time elapsed from the estimated commencement of the outage until restoration of full service; the estimated number of blocked calls during the outage; the apparent or known cause of the incident, including the name and type of equipment involved and the specific part of the network affected; methods used to restore service; and the steps taken to prevent recurrences of the outage. When specifying the types of services affected by any reportable outage, carriers must indicate when 911 service was disrupted and rerouting to alternative answering locations was not implemented. The report shall be captioned Initial Service Disruption Report. Lack of any of the above information shall not delay the filing of this report. Not later than thirty days after the outage, the carrier shall file with the Chief, Common Carrier Bureau, a Final Service Disruption Report providing all available information on the service outage, including any information not contained in its Initial Service Disruption Report and detailing specifically the root cause of the outage and listing and evaluating the effectiveness and application in the immediate case of any best practices or industry standards identified by the Network Reliability Council to eliminate or ameliorate outages of the reported type. Under this rule, carriers are not required to report outages affecting nuclear power plants, major military installations and key government facilities to the Commission. Report at these facilities will be made according to the following procedures:

(1) When there is a mission-affecting outage, the affected facility will report the outage to the National Communications System (NCS) and call the service provider in order to determine if the outage is expected to last 30 minutes. If the outage is not expected to, and does not, last 30 minutes, it will not be reported to the FCC. If it is expected to last 30 minutes or does last 30 minutes, the NCS, on the advice of the affected special facility, will either:

(i) Forward a report of the outage to the Commission, supplying the information for initial reports affecting special facilities specified in this section of the Commission's Rules;

(ii) Forward a report of the outage to the Commission, designating the outage as one affecting ''special facilities,'' but reporting it at a level of detail that precludes identification of the particular facility involved; or

(iii) Hold the report at the NCS due to the critical nature of the application.

(2) If there is to be a report to the Commission, a written or oral report will be given by the NCS within 120 minutes of an outage to the Commission's Monitoring Watch Officer, on duty 24 hours a day in the FCC headquarters building in Washington, DC, or on a secondary basis it may be served on the Commission's Watch Officer on duty at the FCC's facility at Grand Island, Nebraska. If the report is oral, it is to be followed by a written report the next business day. Those carriers whose service failures are in any way responsible for the outage must consult with NCS upon its request for information.

(3) If there is to be a report to the Commission, the service provider will provide a written report to the NCS, supplying the information for final reports for special facilities required by this section of the Commission's rules. The service provider's final report to

the NCS will be filed within 28 days after the outage, allowing the NCS to then file the report with the Commission within 30 days after the outage. If the outage is reportable as described in paragraph (e)(2) of this section, and the NCS determines that the final report can be presented to the Commission without jeopardizing matters of national security or emergency preparedness, the NCS will forward the report as provided in either paragraphs (e)(1)(i) or (e)(1)(ii) of this section to the Commission.

(f) If an outage is determined to have affected a 911 facility so as to be reportable as a special facilities outage, the carrier whose duty it is to report the outage to the FCC shall as soon as possible by telephone or other electronic means notify any official who has been designated by the management of the affected 911 facility as the official to be contacted by the carrier in case of a telecommunications outage at that facility. The carrier shall convey all available information to the designated official that will be useful to the management of the affected facility in mitigating the affects of the outage on callers to that facility.

(g) In the case of LEC end offices, carriers will use the number of lines terminating at the office for determining whether the criteria for reporting an outage has been reached. In the case of IXC or LEC tandem facilities, carriers must, if technically possible, use real-time blocked calls to determine whether criteria for reporting an outage have been reached. Carriers must report IXC and LEC tandem outages where more than 150,000 calls are blocked during a period of 30 or more minutes for purposes of complying with the required 50,000 potentially affected customers threshold and must report such outages where more than 90,000 calls are blocked during a period of 30 or more minutes for purposes of complying with the 30,000 potentially affected customers threshold. Carriers may use historical data to estimate blocked calls when required real-time blocked call counts are not possible. When using historical data, carriers must report incidents where more than 50,000 calls are blocked during a period of 30 or more minutes for purposes of complying with the required 50,000 potentially affected customers threshold and must report incidents where more than 30,000 calls are blocked during a period of 30 or more minutes for purposes of complying with the 30,000 potentially affected customers threshold.

(h)(1) Any local exchange or interexchange common carrier or competitive access provider that operates transmission or switching facilities and provides access services or interstate or international telecommunications services, the experiences an outage on any facilities that it owns, operates or leases that potentially affects 911 services must notify the Commission within the applicable period shown in the chart in this paragraph (h)(1) if such outage meets one of the following conditions, as defined in paragraph (a)(4) of this section:

Condition	Lines affected	Duration	Period
Loss of E911 Tandem capability	No limit	30 minutes or more	120 minutes.
Isolation of PSAP(s)	Under 30,000 access lines served	24 hours or more	120 minutes.
Isolation of PSAP(s)	50,000 or more access lines served	30 minutes or more	120 minutes.
Isolation of PSAP(s)	30,000 to 50,000 access lines served	30 minutes or more	3 days.
Isolation of EO switch, host/remotes from 911.	50,000 or more access lines served	30 minutes or more	120 minutes.
Isolation of EO switch, host/remotes from 911.	30,000 to 50,000 access lines served	30 minutes or more	3 days.

(2) Satellite carriers and cellular carriers are exempted from the reporting requirement in this paragraph (h). Notification must be served on the Commission's Monitoring Watch Officer, on duty 24 hours a day in the FCC headquarters building in Washington, D.C., or on a secondary basis it may be served on the Commission's Watch Officer on duty at the FCC's facility at Grand Island, Nebraska. The notification must be by facsimile or other record means delivered within the notification period indicated above from

the time of the carrier's first knowledge that the service outage ''potentially affects a 911 special facility'' as described in paragraph (a)(4) of this section and summarized in the chart in paragraph (h)(1) of this section and the service outage has continued for the duration indicated in paragraph (a)(4) of this section and summarized in the chart in paragraph (h)(1) of this section. Notification shall identify a contact person who can provide further information, the telephone number at which the contact person can be reached, and the information known at the time notification is made about the service outage including: the date and estimated time (local time at the location of the outage) of commencement of the outage; the geographic area affected; the estimated number of customers affected; the types of services affected; the duration of the outage, *i.e.* time elapsed from the estimated commencement of the outage until restoration of full service; the estimated number of blocked calls during the outage; the apparent or known cause of the incident, including the name and type of equipment involved and the specific part of the network affected; methods used to restore service; and the steps taken to prevent recurrences of the outage. The report shall be captioned Initial Service Disruption Report. Lack of any of the information in this paragraph (h)(2) shall not delay the filing of this report. Not later than thirty days after the outage, the carrier shall file with the Chief, Common Carrier Bureau, a Final Service Disruption Report providing all available information on the service outage, including any information not contained in its Initial Service Disruption Report and detailing specifically the root cause of the outage and listing and evaluating the effectiveness and application in the immediate case of any best practices or industry standards identified by the Network Reliability Council to eliminate or ameliorate outages of the reported type.

[59 FR 40266, Aug. 8, 1994, as amended at 60 FR 57196, Nov. 14, 1995]

CONTENTS OF APPLICATIONS; EXAMPLES

§63.500 Contents of applications to dismantle or remove a trunk line.

The application shall contain:

(a) The name and address of each applicant;

(b) The name, title, and post office address of the officer to whom correspondence concerning the application is to be addressed;

(c) Nature of proposed discontinuance, reduction, or impairment;

(d) Identification of community or part of community involved and date on which applicant desires to make proposed discontinuance, reduction, or impairment effective; if for a temporary period only, indicate the approximate period for which authorization is desired;

(e) Proposed new tariff listing, if any, and difference, if any, between present charges to the public and charges for the service to be substituted;

(f) Description of the service area affected including population and general character of business of the community;

(g) Name of any other carrier or carriers providing telegraph or telephone service to the community;

(h) Statement of the reasons for proposed discontinuance, reduction, or impairment;

(i) Statement of the factors showing that neither present nor future public convenience and necessity would be adversely affected by the granting of the application;

(j) Description of any previous discontinuance, reduction, or impairment of service to the community affected by the application, which has been made by the applicant during the 12 months preceding filing of application, and statement of any present plans for future discontinuance, reduction, or impairment of service to such community;

(k) A map or sketch showing:

(1) Routes of line proposed to be removed from service and of alternate lines, if any, to be retained;

(2) Type and ownership of structures (open wire, aerial cable, underground cable, carrier systems, etc.);

(3) Cities and towns along routes with approximate population of each, and route kilometers between the principal points;

(4) Location of important operating centers and repeater or relay points;

(5) State boundary lines through which the facilities extend;

(l) A wire chart showing, for both the line proposed to be removed and the alternate lines to be retained, the regular and normal assignment of each wire, its method of operation, the number of channels and normal assignment of each;

(m) The number of wires or cables to be removed and the kind, size, and length of each;

(n) A complete statement showing how the traffic load on the line proposed to be removed will be diverted to other lines and the adequacy of such other lines to handle the increased load.

[28 FR 13229, Dec. 5, 1963, as amended at 58 FR 44907, Aug. 25, 1993]

§ 63.501 Contents of applications to sever physical connection or to terminate or suspend interchange of traffic with another carrier.

The application shall contain:

(a) The name and address of each applicant;

(b) The name, title, and post office address of the officer to whom correspondence concerning the application is to be addressed;

(c) Nature of the proposed change;

(d) Identification of community or part of community involved and date on which applicant desires to make proposed discontinuance, reduction, or impairment effective; if for a temporary period only, indicate the approximate period for which authorization is desired;

(e) Proposed new tariff listing, if any, and differences, if any, between present charges to the public and charges for the service to be substituted;

(f) Description of the service area affected including population and general character of business of the community;

(g) Name of any other carrier or carriers providing telegraph or telephone service to the community;

(h) Statement of the reasons for proposed discontinuance, reduction, or impairment;

(i) Statement of the factors showing that neither present nor future public convenience and necessity would be adversely affected by the granting of the application;

(j) Description of any previous discontinuance, reduction, or impairment of service to the community affected by the application, which has been made by the applicant during the 12 months preceding filing of application, and statement of any present plans for future discontinuance, reduction, or impairment of service to such community;

(k) Name of other carrier;

(l) Points served through such physical connection or interchange;

(m) Description of the service involved;

(n) Statement as to how points served by means of such physical connection or interchange will be served thereafter;

(o) Amount of traffic interchanged for each month during preceding 6–month period;

(p) Statement as to whether severance of physical connection or termination or suspension of interchange of traffic is being made with consent of other carrier.

§ 63.504 Contents of applications to close a public toll station where no other such toll station of the applicant in the community will continue service and where telephone toll service is not otherwise available to the public through a telephone exchange connected with the toll lines of a carrier.

The application shall contain:

(a) The name and address of each applicant;

(b) The name, title, and post office address of the officer to whom correspondence concerning the application is to be addressed;

(c) Nature of proposed discontinuance, reduction, or impairment;

(d) Identification of community or part of community involved and date on which applicant desires to make proposed discontinuance, reduction, or

impairment effective; if for a temporary period only, indicate the approximate period for which authorization is desired;

(e) Proposed new tariff listing, if any, and difference, if any, between present charges to the public and charges for the service to be substituted, if any;

(f) Description of the service area affected including population and general character of business of the community;

(g) Name of other carrier or carriers, if any, which will provide toll station service in the community;

(h) Statement of the reasons for proposed discontinuance, reduction, or impairment;

(i) Statement of the factors showing that neither present nor future public convenience and necessity would be adversely affected by the granting of the application;

(j) Description of any previous discontinuance, reduction, or impairment of service to the community affected by the application, which has been made by the applicant during the 12 months preceding filing of application, and statement of any present plans for future discontinuance, reduction, or impairment of service to such community;

(k) Description of the service involved, including a statement of the number of toll telephone messages or telegraph messages sent-paid and received-collect, and the revenues from such traffic, in connection with the service proposed to be discontinued for each of the past 6 months; and, if the volume of such traffic handled in the area has decreased during recent years, the reasons therefor.

§63.505 Contents of applications for any type of discontinuance, reduction, or impairment of telephone service not specifically provided for in this part.

The application shall contain:

(a) The name and address of each applicant;

(b) The name, title, and post office address of the officer to whom correspondence concerning the application is to be addressed;

(c) Nature of proposed discontinuance, reduction, or impairment;

(d) Identification of community or part of community involved and date on which applicant desires to make proposed discontinuance, reduction or impairment effective, if for a temporary period only, indicate the approximate period for which authorization is desired;

(e) Proposed new tariff listing, if any, and difference, if any, between present charges to the public and charges for the service to be substituted;

(f) Description of the service area affected including population and general character of business of the community;

(g) Name of any other carrier or carriers providing telephone service to the community;

(h) Statement of the reasons for proposed discontinuance, reduction, or impairment;

(i) Statement of the factors showing that neither present nor future public convenience and necessity would be adversely affected by the granting of the application;

(j) Description of any previous discontinuance, reduction, or impairment of service to the community affected by the application, which has been made by the applicant during the 12 months preceding filing of application, and statement of any present plans for future discontinuance, reduction, or impairment of service to such community;

(k) Description of the service involved, including:

(1) Existing telephone service by the applicant available to the community or part thereof involved;

(2) Telephone service (available from applicant or others) which would remain in the community or part thereof involved in the event the application is granted;

(l) A statement of the number of toll messages sent-paid and received-collect and the revenues from such traffic in connection with the service proposed to be discontinued, reduced, or impaired for each of the past 6 months; and, if the volume of such traffic handled in the area has decreased during recent years, the reasons therefor.

[45 FR 6586, Jan. 29, 1980]

§ 63.601 Contents of applications for authority to reduce the hours of service of public coast stations under the conditions specified in § 63.70.

F.C.C. File No. T–D——

Month ——— Year ———

———————————————

(Name of applicant)

———————————————

(Address of applicant)

In the matter of Proposed Reduction in Hours of Service of a Public Coast Station Pursuant to § 63.70 of the Commission's rules. Data regarding public coast station ———

(Call and address)

Present hours:
Monday through Friday ———
Saturday ———
Sunday ———
Proposed hours:
Monday through Friday ———
Saturday ———
Sunday ———
Proposed effective time and date of change

Average number of messages handled for month of ———, 19—

during total hours to be deleted ———

———————————————

during maximum hour to be deleted———

Data regarding substitute service to be provided by other public coast stations available and capable of providing service to the community affected, or in the marine area served by the public coast station involved:

Station call and location	Operated by	Hours of service		
		Monday thru Friday	Saturday	Sunday

REQUEST FOR DESIGNATION AS A RECOGNIZED PRIVATE OPERATING AGENCY

§ 63.701 Contents of application.

Except as otherwise provided in this part, any party requesting designation as a recognized private operating agency within the meaning of the International Telecommunication Convention shall request such designation by filing an original and two copies of an application stating the nature of the services to be provided and a statement in the applicant's own words but which makes clear that the applicant is aware that it is obligated under Article 44 of the Convention to obey the mandatory provisions thereof, and all regulations promulgated thereunder, and a pledge that it will engage in no conduct or operations which otherwise obey the Convention and regulations in all respects. The applicant should also include a statement that it is aware that failure to comply will result in an order from the Federal Communications Commission to cease and desist from future violations of an ITU regulation and may result in revocation of its recognized private operating agency status by the United States Department of State. Such statement must include the following information where applicable:

(a) The name and address of each applicant;

(b) The Government, State, or Territory under the laws of which each corporate applicant is organized;

(c) The name, title and post office address of the officer of a corporate applicant, or representative of a non-corporate applicant, to whom correspondence concerning the application is to be addressed;

(d) A statement of the ownership of a non-corporate applicant, or the ownership of the stock of a corporate applicant, including an indication whether the applicant or its stock is owned directly or indirectly by an alien;

(e) A copy of each corporate applicant's articant's articles of incorporation (or its equivalent) and of its corporate bylaws;

(f) A statement whether the applicant is a carrier subject to section 214 of the Communications Act, an operator of broadcast or other radio facilities, licensed under title III of the Act, capable of causing harmful interference with the radio transmissions of other countries, or a non-carrier provider of services classed as ''enhanced'' under § 64.702(a);

(g) A statement that the services for which designated as a recognized private operating agency is sought will be extended to a point outside the United

States or are capable of causing harmful interference of other radio transmission and a statement of the nature of the services to be provided;

(h) A statement setting forth the points between which the services are to be provided; and

(i) A statement as to whether covered services are provided by facilities owned by the applicant, by facilities leased from another entity, or other arrangement and a description of the arrangement.

[51 FR 18448, May 20, 1986]

§ 63.702 Form.

Application under § 63.701 shall be submitted in the form specified in § 63.53 for applications under section 214 of the Communications Act.

[51 FR 18448, May 20, 1986]

PART 64—MISCELLANEOUS RULES RELATING TO COMMON CARRIERS

Subpart A—Traffic Damage Claims

Sec.
64.1 Traffic damage claims.

Subpart B—Restrictions on Indecent Telephone Message Services

64.201 Restrictions on indecent telephone message services.

Subpart C—Furnishing of Facilities to Foreign Governments for International Communications

64.301 Furnishing of facilities to foreign governments for international communications.

Subpart D—Procedures for Handling Priority Services in Emergencies

64.401 Policies and procedures for provisioning and restoring certain telecommunications services in emergencies.

Subpart E—Use of Recording Devices by Telephone Companies

64.501 Recording of telephone conversations with telephone companies.

Subpart F—Telecommunications Relay Services and Related Customer Premises Equipment for Persons With Disabilities

64.601 Definitions.
64.602 Jurisdiction.
64.603 Provision of services.
64.604 Mandatory minimum standards.
64.605 State certification.
64.606 Furnishing related customer premises equipment.
64.607 Provision of hearing aid compatible telephones by exchange carriers.
64.608 Enforcement of related customer premises equipment rules.

Subpart G—Furnishing of Enhanced Services and Customer-Premises Equipment by Communications Common Carriers; Telephone Operator Services

64.702 Furnishing of enhanced services and customer-premises equipment.
64.703 Consumer information.
64.704 Call blocking prohibited.
64.705 Restrictions on charges related to the provision of operator services.
64.706 Minimum standards for the routing and handling of emergency telephone calls.
64.707 Public dissemination of information by providers of operator services.
64.708 Definitions.

Subpart H—Extension of Unsecured Credit for Interstate and Foreign Communications Services to Candidates for Federal Office

64.801 Purpose.
64.802 Applicability.
64.803 Definitions.
64.804 Rules governing the extension of unsecured credit to candidates or persons on behalf of such candidates for Federal office for interstate and foreign common carrier communication services.

Subpart I—Allocation of Costs

64.901 Allocation of costs.
64.902 Transactions with affiliates.
64.903 Cost allocation manuals.
64.904 Independent audits.

Subpart J—International Settlements Policy and Waivers

64.1001 International settlements policy and waivers.

Subpart K—Changing Long Distance Service

64.1100 Verification of orders for long distance service generated by telemarketing.
64.1150 Letter of agency form and content.

Subpart L—Restrictions on Telephone Solicitation

64.1200 Delivery restrictions.
64.1201 Restrictions on billing name and address disclosure.

Subpart M—Competitive Payphone Compensation

64.1301 Competitive payphone compensation.

Subpart N—Expanded Interconnection

64.1401 Expanded interconnection.
64.1402 Rights and responsibilities of interconnectors.

Subpart O—Interstate Pay-Per-Call and Other Information Services

64.1501 Definitions.
64.1502 Limitations on the provision of pay-per-call services.
64.1503 Termination of pay-per-call and other information programs.
64.1504 Restrictions on the use of toll-free numbers.
64.1505 Restrictions on collect telephone calls.
64.1506 Number designation.
64.1507 Prohibition on disconnection or interruption of service for failure to remit pay-per-call and similar service charges.
64.1508 Blocking access to 900 service.
64.1509 Disclosure and dissemination of pay-per-call information.
64.1510 Billing and collection of pay-per-call and similar service charges.
64.1511 Forgiveness of charges and refunds.
64.1512 Involuntary blocking of pay-per-call services.
64.1513 Verification of charitable status.
64.1514 Generation of signalling tones.
64.1515 Recovery of costs.

Subpart P—Calling Party Telephone Number; Privacy

64.1600 Definitions.
64.1601 Delivery requirements and privacy restrictions.
64.1602 Restrictions on use and sale of telephone subscriber information provided pursuant to automatic number identification or charge number services.
64.1603 Customer notification.
64.1604 Effective date.

Subpart Q—Implementation of Section 273(d)(5) of the Communications Act: Dispute Resolution Regarding Equipment Standards

64.1700 Purpose and scope.
64.1701 Definitions.
64.1702 Procedures.
64.1703 Dispute resolution default process.
64.1704 Frivolous disputes/penalties.

Subpart R—Geographic Rate Averaging and Rate Integration

64.1801 Geographic rate averaging and rate integration.

APPENDIX A TO PART 64—TELECOMMUNICATIONS SERVICE PRIORITY (TSP) SYSTEM FOR NATIONAL SECURITY EMERGENCY PREPAREDNESS (NSEP)

AUTHORITY: 47 U.S.C. 154.

SOURCE: 28 FR 13239, Dec. 5, 1963, unless otherwise noted.

Subpart A—Traffic Damage Claims

§ 64.1 Traffic damage claims.

(a) Each carrier engaged in furnishing radio-telegraph, wire-telegraph, or ocean-cable service shall maintain separate files for each damage claim of a traffic nature filed with the carrier, showing the name, address, and nature of business of the claimant, the basis for the claim, disposition made, and all correspondence, reports, and records pertaining thereto. Such files shall be preserved in accordance with existing rules of the Commission (part 42 of this chapter) and at points (one or more) to be specifically designated by each carrier.

(b) The aforementioned carriers shall make no payment as a result of any traffic damage claim if the amount of the payment would be in excess of the total amount collected by the carrier on the message or messages from which the claim arose unless such claim be presented to the carrier in writing signed by the claimant and setting forth the reason for the claim.

Subpart B—Restrictions on Indecent Telephone Message Services

§64.201 Restrictions on indecent telephone message services.

(a) It is a defense to prosecution for the provision of indecent communications under section 223(b)(2) of the Communications Act of 1934, as amended (the Act), 47 U.S.C. 223(b)(2), that the defendant has taken the action set forth in paragraph (a)(1) of this section and, in addition, has complied with the following: Taken one of the actions set forth in paragraphs (a)(2), (3), or (4) of this section to restrict access to prohibited communications to persons eighteen years of age or older, and has additionally complied with paragraph (a)(5) of this section, where applicable:

(1) Has notified the common carrier identified in section 223(c)(1) of the Act, in writing, that he or she is providing the kind of service described in section 223(b)(2) of the Act.

(2) Requires payment by credit card before transmission of the message; or

(3) Requires an authorized access or identification code before transmission of the message, and where the defendant has:

(i) Issued the code by mailing it to the applicant after reasonably ascertaining through receipt of a written application that the applicant is not under eighteen years of age; and

(ii) Established a procedure to cancel immediately the code of any person upon written, telephonic or other notice to the defendant's business office that such code has been lost, stolen, or used by a person or persons under the age of eighteen, or that such code is no longer desired; or

(4) Scrambles the message using any technique that renders the audio unintelligible and incomprehensible to the calling party unless that party uses a descrambler; and,

(5) Where the defendant is a message sponsor subscriber to mass announcement services tariffed at this Commission and such defendant prior to the transmission of the message has requested in writing to the carrier providing the public announcement service that calls to this message service be subject to billing notification as an adult telephone message service.

(b) A common carrier within the District of Columbia or within any State, or in interstate or foreign commerce, shall not, to the extent technically feasible, provide access to a communication described in section 223(b) of the Act from the telephone of any subscriber who has not previously requested in writing the carrier to provide access to such communication if the carrier collects from subscribers an identifiable charge for such communication that the carrier remits, in whole or in part, to the provider of such communication.

[52 FR 17761, May 12, 1987, as amended at 55 FR 28916, July 16, 1990]

Subpart C—Furnishing of Facilities to Foreign Governments for International Communications

§64.301 Furnishing of facilities to foreign governments for international communications.

Common carriers by wire and radio shall, in accordance with section 201 of the Communications Act, furnish services and facilities for communications to any foreign government upon reasonable demand therefor: *Provided, however,* That, if a foreign government fails or refuses, upon reasonable demand, to furnish particular services and facilities to the United States Government for communications between the territory of that government and the United States or any other point, such carriers shall, to the extent specifically ordered by the Commission, deny equivalent services or facilities in the United States to such foreign government for communications between the United States and the territory of that foreign government or any other point.

(Secs. 201, 214, 303, 308, 48 Stat. 1075, 1082, 1085; 47 U.S.C. 201, 214, 303, 308)

[28 FR 13242, Dec. 5, 1963]

Subpart D—Procedures for Handling Priority Services in Emergencies

§ 64.401 Policies and procedures for provisioning and restoring certain telecommunications services in emergencies.

The communications common carrier shall maintain and provision and, if disrupted, restore facilities and services in accordance with policies and procedures set forth in the appendix to this part.

[53 FR 47536, Nov. 23, 1988]

Subpart E—Use of Recording Devices by Telephone Companies

§ 64.501 Recording of telephone conversations with telephone companies.

No telephone common carrier, subject in whole or in part to the Communications Act of 1934, as amended, may use any recording device in connection with any interstate or foreign telephone conversation between any member of the public, on the one hand, and any officer, agent or other person acting for or employed by any such telephone common carrier, on the other hand, except under the following conditions:

(a) Where such use shall be preceded by verbal or written consent of all parties to the telephone conversation, or

(b) Where such use shall be preceded by verbal notification which is recorded at the beginning, and as part of the call, by the recording party, or

(c) Where such use shall be accompanied by an automatic tone warning device, which will automatically produce a distinct signal that is repeated at regular intervals during the course of the telephone conversation when the recording device is in use. *Provided That:*

(1) The characteristics of the warning tone shall be the same as those specified in the Orders of this Commission adopted by it in ''Use of Recording Devices in Connection With Telephone Service,'' Docket 6787, 11 FCC 1033 (1947); 12 FCC 1005 (November 26, 1947); 12 FCC 1008 (May 20, 1948).

(d) That the characteristics of the warning tone shall be the same as those specified in the Orders of this Commission adopted by it in ''Use of Recording Devices in Connection With Telephone Service,'' Docket 6787; 11 F.C.C. 1033 (1947); 12 F.C.C. 1005 (November 26, 1947); 12 F.C.C. 1008 (May 20, 1948);

(e) That no recording device shall be used unless it can be physically connected to and disconnected from the telephone line or switched on and off.

(Secs. 2, 3, 4, 5, 301, 303, 307, 308, 309, 315, 317; 48 Stat., as amended, 1064, 1065, 1066, 1068, 1081, 1082, 1083, 1084, 1085, 1089; 47 U.S.C. 152, 153, 154, 155, 301, 303, 307, 308, 309, 315, 317)

[32 FR 11275, Aug. 3, 1967, as amended at 46 FR 29480, June 2, 1981; 52 FR 3654, Feb. 5, 1987]

Subpart F—Telecommunications Relay Services and Related Customer Premises Equipment for Persons With Disabilities

SOURCE: 56 FR 36731, Aug. 1, 1991, unless otherwise noted.

§ 64.601 Definitions.

As used in this subpart, the following definitions apply:

(1) *American Sign Language (ASL).* A visual language based on hand shape, position, movement, and orientation of the hands in relation to each other and the body.

(2) *ASCII.* An acronym for American Standard Code for Information Interexchange which employs an eight bit code and can operate at any standard transmission baud rate including 300, 1200, 2400, and higher.

(3) *Baudot.* A seven bit code, only five of which are information bits. Baudot is used by some text telephones to communicate with each other at a 45.5 baud rate.

(4) *Common carrier or carrier.* Any common carrier engaged in interstate communication by wire or radio as defined in section 3(h) of the Communications Act of 1934, as amended (the Act), and any common carrier engaged in intrastate communication by wire or radio, notwithstanding sections 2(b) and 221(b) of the Act.

(5) *Communications assistant (CA).* A person who transliterates conversation from text to voice and from voice to

text between two end users of TRS. CA supersedes the term ''TDD operator.''

(6) *Hearing carry over (HCO).* A reduced form of TRS where the person with the speech disability is able to listen to the other end user and, in reply, the CA speaks the text as typed by the person with the speech disability. The CA does not type any conversation.

(7) *Telecommunications relay services (TRS).* Telephone transmission services that provide the ability for an individual who has a hearing or speech disability to engage in communication by wire or radio with a hearing individual in a manner that is functionally equivalent to the ability of an individual who does not have a hearing or speech disability to communicate using voice communication services by wire or radio. Such term includes services that enable two-way communication between an individual who uses a text telephone or other nonvoice terminal device and an individual who does not use such a device. TRS supersedes the terms ''dual party relay system,'' ''message relay services,'' and ''TDD Relay.''

(8) *Text telephone (TT).* A machine that employs graphic communication in the transmission of coded signals through a wire or radio communication system. TT supersedes the term ''TDD'' or ''telecommunications device for the deaf.''

(9) *Voice carry over (VCO).* A reduced form of TRS where the person with the hearing disability is able to speak directly to the other end user. The CA types the response back to the person with the hearing disability. The CA does not voice the conversation.

§64.602 Jurisdiction.

Any violation of this subpart by any common carrier engaged in intrastate communication shall be subject to the same remedies, penalties, and procedures as are applicable to a violation of the Act by a common carrier engaged in interstate communication.

§64.603 Provision of services.

Each common carrier providing telephone voice transmission services shall provide, not later than July 26, 1993, in compliance with the regulations prescribed herein, throughout the area in which it offers services, telecommunications relay services, individually, through designees, through a competitively selected vendor, or in concert with other carriers. A common carrier shall be considered to be in compliance with these regulations:

(a) With respect to intrastate telecommunications relay services in any state that does not have a certified program under §64.605 and with respect to interstate telecommunications relay services, if such common carrier (or other entity through which the carrier is providing such relay services) is in compliance with §64.604; or

(b) With respect to intrastate telecommunications relay services in any state that has a certified program under §64.605 for such state, if such common carrier (or other entity through which the carrier is providing such relay services) is in compliance with the program certified under §64.605 for such state.

§64.604 Mandatory minimum standards.

(a) *Operational standards*—(1) *Communications assistant (CA).* TRS providers are responsible for requiring that CAs be sufficiently trained to effectively meet the specialized communications needs of individuals with hearing and speech disabilities; and that CAs have competent skills in typing, grammar, spelling, interpretation of typewritten ASL, and familiarity with hearing and speech disability cultures, languages and etiquette.

(2) *Confidentiality and conversation content.* Except as authorized by section 705 of the Communications Act, 47 U.S.C. 605, CAs are prohibited from disclosing the content of any relayed conversation regardless of content and from keeping records of the content of any conversation beyond the duration of a call, even if to do so would be inconsistent with state or local law. CAs are prohibited from intentionally altering a relayed conversation and, to the extent that it is not inconsistent with federal, state or local law regarding use of telephone company facilities for illegal purposes, must relay all conversation verbatim unless the relay user specifically requests summarization.

(3) *Types of calls.* Consistent with the obligations of common carrier operators, CAs are prohibited from refusing single or sequential calls or limiting the length of calls utilizing relay services. TRS shall be capable of handling any type of call normally provided by common carriers and the burden of proving the infeasibility of handling any type of call will be placed on the carriers. Providers of TRS are permitted to decline to complete a call because credit authorization is denied. CAs shall handle emergency calls in the same manner as they handle any other TRS calls.

(b) *Technical standards*—(1) *ASCII and Baudot.* TRS shall be capable of communicating with ASCII and Baudot format, at any speed generally in use.

(2) *Speed of answer.* TRS shall include adequate staffing to provide callers with efficient access under projected calling volumes, so that the probability of a busy response due to CA unavailability shall be functionally equivalent to what a voice caller would experience in attempting to reach a party through the voice telephone network. TRS shall, except during network failure, answer 85% of all calls within 10 seconds and no more than 30 seconds shall elapse between receipt of dialing information and the dialing of the requested number.

(3) *Equal access to interexchange carriers.* TRS users shall have access to their chosen interexchange carrier through the TRS, and to all other operator services, to the same extent that such access is provided to voice users.

(4) *TRS facilities.* TRS shall operate every day, 24 hours a day. TRS shall have redundancy features functionally equivalent to the equipment in normal central offices, including uninterruptible power for emergency use. TRS shall transmit conversations between TT and voice callers in real time. Adequate network facilities shall be used in conjunction with TRS so that under projected calling volume the probability of a busy response due to loop trunk congestion shall be functionally equivalent to what a voice caller would experience in attempting to reach a party through the voice telephone network.

(5) *Technology.* No regulation set forth in this subpart is intended to discourage or impair the development of improved technology that fosters the availability of telecommunications to person with disabilities. VCO and HCO technology are required to be standard features of TRS.

(c) *Functional standards*—(1) *Enforcement.* Subject to § 64.603, the Commission shall resolve any complaint alleging a violation of this section within 180 days after the complaint is filed.

(2) *Public access to information.* Carriers, through publication in their directories, periodic billing inserts, placement of TRS instructions in telephone directories, through directory assistance services, and incorporation of TT numbers in telephone directories, shall assure that callers in their service areas are aware of the availability and use of TRS.

(3) *Rates.* TRS users shall pay rates no greater than the rates paid for functionally equivalent voice communication services with respect to such factors as the duration of the call, the time of day, and the distance from the point of origination to the point of termination.

(4) *Jurisdictional separation of costs*—(i) *General.* Where appropriate, costs of providing TRS shall be separated in accordance with the jurisdictional separation procedures and standards set forth in the Commission's regulations adopted pursuant to section 410 of the Communications Act of 1934, as amended.

(ii) *Cost recovery.* Costs caused by interstate TRS shall be recovered from all subscribers for every interstate service, utilizing a shared-funding cost recovery mechanism. Costs caused by intrastate TRS shall be recovered from the intrastate jurisdiction. In a state that has a certified program under § 64.605, the state agency providing TRS shall, through the state's regulatory agency, permit a common carrier to recover costs incurred in providing TRS by a method consistent with the requirements of this section.

(iii) *Telecommunications Relay Services Fund.* Effective July 26, 1993, an Interstate Cost Recovery Plan, hereinafter referred to as the TRS Fund, shall be administered by an entity selected by

the Commission (administrator). The initial administrator, for an interim period, will be the National Exchange Carrier Association, Inc.

(A) *Contributions.* Every carrier providing interstate telecommunications services shall contribute to the TRS Fund on the basis of its relative share of gross interstate revenues as described herein. Contributions shall be made by all carriers who provide interstate services, including, but not limited to, cellular telephone and paging, mobile radio, operator services, personal communications service (PCS), access (including subscriber line charges), alternative access and special access, packet-switched, WATS, 800, 900, message telephone service (MTS), private line, telex, telegraph, video, satellite, intraLATA, international and resale services.

(B) *Contribution computations.* Contributors' contribution to the TRS fund shall be the product of their subject revenues for the prior calendar year and a contribution factor determined annually by the Commission. The contribution factor shall be based on the ratio between expected TRS Fund expenses to total interstate revenues. In the event that contributions exceed TRS payments and administrative costs, the contribution factor for the following year will be adjusted by an appropriate amount, taking into consideration projected cost and usage changes. In the event that contributions are inadequate, the fund administrator may request authority from the Commission to borrow funds commercially, with such debt secured by future years contributions. Each subject carrier must contribute at least $100 per year. Service providers whose annual contributions total less than $1,200 must pay the entire contribution at the beginning of the contribution period. Service providers whose contributions total $1,200 or more may divide their contributions into equal monthly payments. Contributions shall be calculated and filed in accordance with a ''TRS Fund Worksheet,'' which shall be published in the FEDERAL REGISTER. The worksheet sets forth information that must be provided by the contributor, the formula for computing the contribution, the manner of payment, and due dates for payments. The worksheet shall be certified to by an officer of the contributor, and subject to verification by the Commission or the administrator at the discretion of the Commission. Contributors' statements in the worksheet shall be subject to the provisions of section 220 of the Communications Act of 1934, as amended. The fund administrator may bill contributors a separate assessment for reasonable administrative expenses and interest resulting from improper filing or overdue contributions.

(C) *Data collection from TRS Providers.* TRS providers shall provide the administrator with true and adequate data necessary to determine TRS fund revenue requirements and payments. TRS providers shall provide the administrator with the following: total TRS minutes of use, total interstate TRS minutes of use, total TRS operating expenses and total TRS investment in general accordance with part 32 of the Communications Act, and other historical or projected information reasonably requested by the administrator for purposes of computing payments and revenue requirements. The administrator and the Commission shall have the authority to examine, verify and audit data received from TRS providers as necessary to assure the accuracy and integrity of fund payments.

(D) The TRS Fund will be subject to a yearly audit performed by an independent certified accounting firm or the Commission, or both.

(E) *Payments to TRS Providers.* TRS Fund payments shall be distributed to TRS providers based on formulas approved or modified by the Commission. The administrator shall file schedules of payment formulas with the Commission. Such formulas shall be designed to compensate TRS providers for reasonable costs of providing interstate TRS, and shall be subject to Commission approval. Such formulas shall be based on total monthly interstate TRS minutes of use. TRS minutes of use for purposes of interstate cost recovery under the TRS Fund are defined as the minutes of use for completed interstate TRS calls placed through the TRS center beginning after call set-up and concluding after the last message call unit. In addition to the data required

under paragraph (c)(4)(iii)(C) of this section, all TRS providers, including providers who are not interexchange carriers, local exchange carriers, or certified state relay providers, must submit reports of interstate TRS minutes of use to the administrator in order to receive payments. The administrator shall establish procedures to verify payment claims, and may suspend or delay payments to a TRS provider if the TRS provider fails to provide adequate verification of payment upon reasonable request, or if directed by the Commission to do so. TRS Fund administrator shall make payments only to eligible TRS providers operating pursuant to the mandatory minimum standards as required in § 64.604, and after disbursements to the administrator for reasonable expenses incurred by it in connection with TRS Fund administration. TRS providers receiving payments shall file a form prescribed by the administrator. The administrator shall fashion a form that is consistent with Parts 32 and 36 procedures reasonably tailored to meet the needs of TRS providers. The Commission shall have authority to audit providers and have access to all data, including carrier specific data, collected by the fund administrator. The fund administrator shall have authority to audit TRS providers reporting data to the administrator.

(F) TRS providers eligible for receiving payments from the TRS Fund are:

(*1*) TRS facilities operated under contract with and/or by certified state TRS programs pursuant to § 64.605; or

(*2*) TRS facilities owned by or operated under contract with a common carrier providing interstate services operated pursuant to § 64.604; or

(*3*) Interstate common carriers offering TRS pursuant to § 64.604.

(G) Any eligible TRS provider as defined in paragraph (c)(4)(iii) (F) of this section shall notify the administrator of its intent to participate in the TRS Fund thirty (30) days prior to submitting reports of TRS interstate minutes of use in order to receive payment settlements for interstate TRS, and failure to file may exclude the TRS provider from eligibility for the year.

(H) *Administrator reporting, monitoring, and filing requirements.* The administrator shall perform all filing and reporting functions required under paragraphs (c)(4)(iii) (A) through (J), of this section. Beginning in 1994, TRS payment formulas and revenue requirements shall be filed with the Commission on October 1 of each year, to be effective for a one-year period beginning the following January 1. The administrator shall report annually to the Commission an itemization of monthly administrative costs which shall consist of all expenses, receipts, and payments associated with the administration of TRS Fund. The administrator is required to keep the TRS Fund separate from all other funds administered by the administrator, shall file a cost allocation manual (CAM), and shall provide the Commission full access to all data collected pursuant to the administration of the TRS Fund. The administrator shall establish a non-paid, voluntary advisory committee of persons from the hearing and speech disability community, TRS users (voice and text telephone), interstate service providers, state representatives, and TRS providers, which will meet at reasonable intervals (at least semi-annually (in order to monitor TRS cost recovery matters. Each group shall select its own representative to the committee. The administrator's annual report shall include a discussion of advisory committee deliberations.

(I) *Information filed with the administrator.* The administrator shall keep all data obtained from contributors and TRS providers confidential and shall not disclose such data in company-specific form unless directed to do so by the Commission. The administrator shall not use such data except for purposes of administering the TRS Fund, calculating the regulatory fees of interstate common carriers, and aggregating such fee payments for submission to the Commission. The Commission shall have access to all data reported to the administrator, and authority to audit TRS providers.

(J) The administrator's performance and this plan shall be reviewed by the Commission after two years.

(K) All parties providing services or contributions or receiving payments under this section are subject to the enforcement provisions specified in the

Communications Act, the Americans with Disabilities Act, and the Commission's rules.

(5) *Complaints*—(i) *Referral of complaint.* If a complaint to the Commission alleges a violation of this subpart with respect to intrastate TRS within a state and certification of the program of such state under § 64.605 is in effect, the Commission shall refer such complaint to such state expeditiously.

(ii) *Jurisdiction of Commission.* After referring a complaint to a state under paragraph (c)(5)(i) of this section, or if a complaint is filed directly with a state, the Commission shall exercise jurisdiction over such complaint only if:

(A) Final action under such state program has not been taken within:

(*1*) 180 days after the complaint is filed with such state; or

(*2*) A shorter period as prescribed by the regulations of such state; or

(B) The Commission determines that such state program is no longer qualified for certification under § 64.605.

(iii) *Complaint procedures*—(A) *Content.* A complaint shall be in writing, addressed to the Federal Communications Commission, Common Carrier Bureau, TRS Complaints, Washington, DC 20554, or addressed to the appropriate state office, and shall contain:

(*1*) The name and address of the complainant,

(*2*) The name and address of the defendant against whom the complaint is made,

(*3*) A complete statement of the facts, including supporting data, where available, showing that such defendant did or omitted to do anything in contravention of this subpart, and

(*4*) The relief sought.

(B) *Amended complaints.* An amended complaint setting forth transactions, occurrences or events which have happened since the filing of the original complaint and which relate to the original cause of action may be filed with the Commission.

(C) *Number of copies.* An original and two copies of all pleadings shall be filed.

(D) *Service*—(*1*) Except where a complaint is referred to a state pursuant to § 64.604(c)(5)(i), or where a complaint is filed directly with a state, the Commission will serve on the named party a copy of any complaint or amended complaint filed with it, together with a notice of the filing of the complaint. Such notice shall call upon the defendant to satisfy or answer the complaint in writing within the time specified in said notice of complaint.

(*2*) All subsequent pleadings and briefs shall be served by the filing party on all other parties to the proceeding in accordance with the requirements of § 1.47 of this chapter. Proof of such service shall also be made in accordance with the requirements of said section.

(E) *Answers to complaints and amended complaints.* Any party upon whom a copy of a complaint or amended complaint is served under this subpart shall serve an answer within the time specified by the Commission in its notice of complaint. The answer shall advise the parties and the Commission fully and completely of the nature of the defense and shall respond specifically to all material allegations of the complaint. In cases involving allegations of harm, the answer shall indicate what action has been taken or is proposed to be taken to stop the occurrence of such harm. Collateral or immaterial issues shall be avoided in answers and every effort should be made to narrow the issues. Matters alleged as affirmative defenses shall be separately stated and numbered. Any defendant failing to file and serve an answer within the time and in the manner prescribed may be deemed in default.

(F) *Replies to answers or amended answers.* Within 10 days after service of an answer or an amended answer, a complainant may file and serve a reply which shall be responsive to matters contained in such answer or amended answer and shall not contain new matter. Failure to reply will not be deemed an admission of any allegation contained in such answer or amended answer.

(G) *Defective pleadings.* Any pleading filed in a complaint proceeding that is not in substantial conformity with the

requirements of the applicable rules in this subpart may be dismissed.

[56 FR 36731, Aug. 1, 1991, as amended at 58 FR 12176, Mar. 3, 1993; 58 FR 39673, July 26, 1993; 61 FR 36642, July 12, 1996]

§ 64.605 State certification.

(a) *State documentation.* Any state, through its office of the governor or other delegated executive office empowered to provide TRS, desiring to establish a state program under this section shall submit, not later than October 1, 1992, documentation to the Commission addressed to the Federal Communications Commission, Chief, Common Carrier Bureau, TRS Certification Program, Washington, DC 20554, and captioned ''TRS State Certification Application.'' All documentation shall be submitted in narrative form, shall clearly describe the state program for implementing intrastate TRS, and the procedures and remedies for enforcing any requirements imposed by the state program. The Commission shall give public notice of states filing for certification including notification in the FEDERAL REGISTER.

(b) *Requirements for certification.* After review of state documentation, the Commission shall certify, by letter, or order, the state program if the Commission determines that the state certification documentation:

(1) Establishes that the state program meets or exceeds all operational, technical, and functional minimum standards contained in § 64.604;

(2) Establishes that the state program makes available adequate procedures and remedies for enforcing the requirements of the state program; and

(3) Where a state program exceeds the mandatory minimum standards contained in § 64.604, the state establishes that its program in no way conflicts with federal law.

(c) *Certification period.* State certification shall remain in effect for five years. One year prior to expiration of certification, a state may apply for renewal of its certification by filing documentation as prescribed by paragraphs (a) and (b) of this section.

(d) *Method of funding.* Except as provided in § 64.604, the Commission shall not refuse to certify a state program based solely on the method such state will implement for funding intrastate TRS, but funding mechanisms, if labeled, shall be labeled in a manner that promote national understanding of TRS and do not offend the public.

(e) *Suspension or revocation of certification.* The Commission may suspend or revoke such certification if, after notice and opportunity for hearing, the Commission determines that such certification is no longer warranted. In a state whose program has been suspended or revoked, the Commission shall take such steps as may be necessary, consistent with this subpart, to ensure continuity of TRS.

§ 64.606 Furnishing related customer premises equipment.

(a) Any communications common carrier may provide, under tariff, customer premises equipment (other than hearing aid compatible telephones as defined in part 68 of this chapter, needed by persons with hearing, speech, vision or mobility disabilities. Such equipment may be provided to persons with those disabilities or to associations or institutions who require such equipment regularly to communicate with persons with disabilities. Examples of such equipment include, but are not limited to, artificial larynxes, bone conductor receivers and TTs.

(b) Any carrier which provides telecommunications devices for persons with hearing and/or speech disabilities, whether or not pursuant to tariff, shall respond to any inquiry concerning:

(1) The availability (including general price levels) of TTs using ASCII, Baudot, or both formats; and

(2) The compatibility of any TT with other such devices and computers.

§ 64.607 Provision of hearing aid compatible telephones by exchange carriers.

In the absence of alternative suppliers in an exchange area, an exchange carrier must provide a hearing aid compatible telephone, as defined in § 68.316 of this chapter, and provide related installation and maintenance services for such telephones on a detariffed basis to any customer with a hearing disability who requests such equipment or services.

[61 FR 42185, Aug. 14, 1996]

EFFECTIVE DATE NOTE: At 61 FR 42185, Aug. 14, 1996, §64.607 was revised, effective Oct. 23, 1996. For the convenience of the user, the superseded text is set forth as follows:

§64.607 Provision of hearing aid compatible telephones by exchange carriers.

In the absence of alternative suppliers in an exchange area, an exchange carrier must provide a hearing aid compatible telephone, as defined in part 68 of this chapter, and provide related installation and maintenance services for such telephones on a detariffed basis to any customer with a hearing disability who requests such equipment or services.

§64.608 Enforcement of related customer premises equipment rules.

Enforcement of §§64.606 and 64.607 is delegated to those state public utility or public service commissions which adopt those sections and provide for their enforcement. Subpart G—Furnishing of Enhanced Services and Customer-Premises Equipment by Communications Common Carriers

Subpart G—Furnishing of Enhanced Services and Customer-Premises Equipment by Communications Common Carriers; Telephone Operator Services

§64.702 Furnishing of enhanced services and customer-premises equipment.

(a) For the purpose of this subpart, the term *enhanced service* shall refer to services, offered over common carrier transmission facilities used in interstate communications, which employ computer processing applications that act on the format, content, code, protocol or similar aspects of the subscriber's transmitted information; provide the subscriber additional, different, or restructured information; or involve subscriber interaction with stored information. Enhanced services are not regulated under title II of the Act.

(b) Communications common carriers subject, in whole or in part, to the Communications Act may directly provide enhanced services and customer-premises equipment; provided, however, that the Commission may prohibit any such common carrier from engaging directly or indirectly in furnishing enhanced services or customer-premises equipment to others except as provided for in paragraph (c) of this section, or as otherwise authorized by the Commission.

(c) A communications common carrier prohibited by the Commission pursuant to paragraph (b) of this section from engaging in the furnishing of enhanced services or customer-premises equipment may, subject to other provisions of law, have a controlling or lesser interest in, or be under common control with, a separate corporate entity that furnishes enhanced services or customer-premises equipment to others provided the following conditions are met:

(1) Each such separate corporation shall obtain all transmission facilities necessary for the provision of enhanced services pursuant to tariff, and may not own any network or local distribution transmission facilities or equipment.

(2) Each such separate corporation shall operate independently in the furnishing of enhanced services and customer-premises equipment. It shall maintain its own books of account, have separate officers, utilize separate operating, marketing, installation, and maintenance personnel, and utilize separate computer facilities in the provision of enhanced services.

(3) Each such separate corporation which provides customer-premises equipment or enhanced services shall deal with any affiliated manufacturing entity only on an arm's length basis.

(4) Any research or development performed on a joint or separate basis for the subsidiary must be done on a compensatory basis. Except for generic software within equipment, manufactured by an affiliate, that is sold ''off the shelf'' to any interested purchaser, the separate corporation must develop its own software, or contract with non-affiliated vendors.

(5) All transactions between the separate corporation and the carrier or its affiliates which involve the transfer, either direct or by accounting or other record entries, of money, personnel, resources, other assets or anything of value, shall be reduced to writing. A copy of any contract, agreement, or other arrangement entered into between such entities shall be filed with

the Commission within 30 days after the contract, agreement, or other arrangement is made. This provision shall not apply to any transaction governed by the provision of an effective state or federal tariff.

(d) A carrier subject to the proscription set forth in paragraph (c) of this section:

(1) Shall not engage in the sale or promotion of enhanced services or customer-premises equipment, on behalf of the separate corporation, or sell, lease or otherwise make available to the separate corporation any capacity or computer system component on its computer system or systems which are used in any way for the provision of its common carrier communications services. (This does not apply to communications services offered the separate subsidiary pursuant to tariff);

(2) Shall disclose to the public all information relating to network design and technical standards and information affecting changes to the telecommunications network which would affect either intercarrier interconnection or the manner in which customer-premises equipment is attached to the interstate network prior to implementation and with reasonable advance notification. When such information is disclosed to the separate corporation it shall be disclosed and be available to any member of the public on the same terms and conditions;

(3) May not provide to any such separate corporation any customer proprietary information unless such information is available to any member of the public on the same terms and conditions; and

(4) Must obtain Commission approval as to the manner in which the separate corporation is to be capitalized, prior to obtaining any interest in the separate corporation or transferring any assets, and must obtain Commission approval of any modification to a Commission approved capitalization plan.

(e) Except as otherwise ordered by the Commission, after March 1, 1982, the carrier provision of customer-premises equipment used in conjunction with the interstate telecommunications network shall be separate and distinct from provision of common carrier communications services and not offered on a tariffed basis.

(Secs. 4, 201–205, 403, 404, 410; 48 Stat., as amended, 1066, 1070–1072, 1094, 1098; (47 U.S.C. 154, 201–205, 403, 404, 410))

[45 FR 31364, May 13, 1980, as amended at 46 FR 6008, Jan. 21, 1981]

§ 64.703 Consumer information.

(a) Each provider of operator services shall:

(1) Identify itself, audibly and distinctly, to the consumer at the beginning of each telephone call and before the consumer incurs any charge for the call;

(2) Permit the consumer to terminate the telephone call at no charge before the call is connected; and

(3) Disclose immediately to the consumer, upon request and at no charge to the consumer—

(i) A quotation of its rates or charges for the call;

(ii) The methods by which such rates or charges will be collected; and

(iii) The methods by which complaints concerning such rates, charges, or collection practices will be resolved.

(b) Each aggregator shall post on or near the telephone instrument, in plain view of consumers:

(1) The name, address, and toll-free telephone number of the provider of operator services;

(2) A written disclosure that the rates for all operator-assisted calls are available on request, and that consumers have a right to obtain access to the intestate common carrier of their choice and may contact their preferred interstate common carriers for information on accessing that carrier's service using that telephone; and

(3) The name and address of the Enforcement Division of the Common Carrier Bureau of the Commission (FCC, Enforcement Division, CCB, Mail Stop 1600A2, Washington, DC 20554), to which the consumer may direct complaints regarding operator services.

(c) *Additional requirements for first 3 years.* In addition to meeting the requirements of paragraph (a) of this section, each presubscribed provider of operator services shall, until January 15,

1994, identify itself audibly and distinctly to the consumer, not only as required in paragraph (a)(1) of this section, but also for a second time before connecting the call and before the consumer incurs any charge.

(d) *Effect of state law or regulation.* The requirements of paragraph (b) of this section shall not apply to an aggregator in any case in which State law or State regulation requires the aggregator to take actions that are substantially the same as those required in paragraph (b) of this section.

(e) Each provider of operator services shall ensure, by contract or tariff, that each aggregator for which such provider is the presubscribed provider of operator services is in compliance with the requirements of paragraph (b) of this section.

[56 FR 18523, Apr. 23, 1991, as amended at 61 FR 14981, Apr. 4, 1996]

§64.704 Call blocking prohibited.

(a) Each aggregator shall ensure that each of its telephones presubscribed to a provider of operator services allows the consumer to use ''800'' and ''950'' access code numbers to obtain access to the provider of operator services desired by the consumer.

(b) Each provider of operator services shall:

(1) Ensure, by contract or tariff, that each aggregator for which such provider is the presubscribed provider of operator services is in compliance with the requirements of paragraphs (a) and (c) of this section; and

(2) Withhold payment (on a location-by-location basis) of any compensation, including commissions, to aggregators if such provider reasonably believes that the aggregator is blocking access to interstate common carriers in violation of paragraphs (a) or (c) of this section.

(c) Each aggregator shall, by the earliest applicable date set forth in this paragraph, ensure that any of its equipment presubscribed to a provider of operator services allows the consumer to use equal access codes to obtain access to the consumer's desired provider of operator services.

(1) Each pay telephone shall, within six (6) months of the effective date of this paragraph, allow the consumer to use equal access codes to obtain access to the consumer's desired provider of operator services.

(2) All equipment that is technologically capable of identifying the dialing of an equal access code followed by any sequence of numbers that will result in billing to the originating telephone and that is technologically capable of blocking access through such dialing sequences without blocking access through other dialing sequences involving equal access codes, shall, within six (6) months of the effective date of this paragraph or upon installation, whichever is sooner, allow the consumer to use equal access codes to obtain access to the consumer's desired provider of operator services.

(3) All equipment or software that is manufactured or imported on or after April 17, 1992, and installed by any aggregator shall, immediately upon installation by the aggregator, allow the consumer to use equal access codes to obtain access to the consumer's desired provider of operator services.

(4) All equipment that can be modified at a cost of no more than $15.00 per line to be technologically capable of identifying the dialing of an equal access code followed by any sequence of numbers that will result in billing to the originating telephone and to be technologically capable of blocking access through such dialing sequences without blocking access through other dialing sequences involving equal access codes, shall, within eighteen (18) months of the effective date of this paragraph, allow the consumer to use equal access codes to obtain access to the consumer's desired provider of operator services.

(5) All equipment not included in paragraphs (c)(1), (c)(2), (c)(3), or (c)(4) of this section shall, no later than April 17, 1997, allow the consumer to use equal access codes to obtain access to the consumer's desired provider of operator services.

(6) This paragraph does not apply to the use by consumers of equal access code dialing sequences that result in billing to the originating telephone.

(d) All providers of operator services, except those employing a store-and-forward device that serves only consumers at the location of the device,

shall establish an ''800'' or ''950'' access code number within six (6) months of the effective date of this paragraph.

[56 FR 18523, Apr. 23, 1991, as amended at 56 FR 40799, Aug. 16, 1991; 57 FR 34260, Aug. 4, 1992]

§ 64.705 Restrictions on charges related to the provision of operator services.

(a) A provider of operator services shall:

(1) Not bill for unanswered telephone calls in areas where equal access is available;

(2) Not knowingly bill for unanswered telephone calls where equal access is not available;

(3) Not engage in call splashing, unless the consumer requests to be transferred to another provider of operator services, the consumer is informed prior to incurring any charges that the rates for the call may not reflect the rates from the actual originating location of the call, and the consumer then consents to be transferred;

(4) Except as provided in paragraph (a)(3) of this section, not bill for a call that does not reflect the location of the origination of the call; and

(5) Ensure, by contract or tariff, that each aggregator for which such provider is the presubscribed provider of operator services is in compliance with the requirements of paragraph (b) of this section.

(b) An aggregator shall ensure that no charge by the aggregator to the consumer for using an ''800'' or ''950'' access code number, or any other access code number, is greater than the amount the aggregator charges for calls placed using the presubscribed provider of operator services.

[56 FR 18523, Apr. 23, 1991]

§ 64.706 Minimum standards for the routing and handling of emergency telephone calls.

Upon receipt of any emergency telephone call, providers of operator services and aggregators shall ensure immediate connection of the call to the appropriate emergency service of the reported location of the emergency, if known, and, if not known, of the originating location of the call.

[61 FR 14981, Apr. 4, 1996]

§ 64.707 Public dissemination of information by providers of operator services.

Providers of operator services shall regularly publish and make available at no cost to inquiring consumers written materials that describe any recent changes in operator services and in the choices available to consumers in that market.

[56 FR 18524, Apr. 23, 1991]

§ 64.708 Definitions.

As used in §§ 64.703 through 64.707 of this part and § 68.318 of this chapter (47 CFR 64.703–64.707, 68.318):

(a) *Access code* means a sequence of numbers that, when dialed, connect the caller to the provider of operator services associated with that sequence;

(b) *Aggregator* means any person that, in the ordinary course of its operations, makes telephones available to the public or to transient users of its premises, for interstate telephone calls using a provider of operator services;

(c) *Call splashing* means the transfer of a telephone call from one provider of operator services to another such provider in such a manner that the subsequent provider is unable or unwilling to determine the location of the origination of the call and, because of such inability or unwillingness, is prevented from billing the call on the basis of such location;

(d) *Consumer* means a person initiating any interstate telephone call using operator services. In collect calling arrangements handled by a provider of operator services, both the party on the originating end of the call and the party on the terminating end of the call are consumers under this definition.

(e) *Equal access* has the meaning given that term in Appendix B of the Modification of Final Judgment entered by the United States District Court on August 24, 1982, in *United States* v. *Western Electric,* Civil Action No. 82–0192 (D.D.C. 1982), as amended by the Court in its orders issued prior to October 17, 1990;

(f) *Equal access code* means an access code that allows the public to obtain an equal access connection to the carrier associated with that code;

(g) *Operator services* means any interstate telecommunications service initiated from an aggregator location that includes, as a component, any automatic or live assistance to a consumer to arrange for billing or completion, or both, of an interstate telephone call through a method other than:

(1) Automatic completion with billing to the telephone from which the call originated; or

(2) Completion through an access code used by the consumer, with billing to an account previously established with the carrier by the consumer;

(h) *Presubscribed provider of operator services* means the interstate provider of operator services to which the consumer is connected when the consumer places a call using a provider of operator services without dialing an access code;

(i) *Provider of operator services* means any common carrier that provides operator services or any other person determined by the Commission to be providing operator services.

[56 FR 18524, Apr. 23, 1991; 56 FR 25721, June 5, 1991, as amended at 61 FR 14981, Apr. 4, 1996]

Subpart H—Extension of Unsecured Credit for Interstate and Foreign Communications Services to Candidates for Federal Office

AUTHORITY: Secs. 4, 201, 202, 203, 218, 219, 48 Stat. 1066, 1070, 1077; 47 U.S.C. 154, 201, 202, 203, 218, 219; sec. 401, 86 Stat. 19; 2 U.S.C. 451.

SOURCE: 37 FR 9393, May 10, 1972, unless otherwise noted.

§64.801 Purpose.

Pursuant to section 401 of the Federal Election Campaign Act of 1971, Public Law 92–225, these rules prescribe the general terms and conditions for the extension of unsecured credit by a communication common carrier to a candidate or person on behalf of such candidate for Federal office.

§64.802 Applicability.

These rules shall apply to each communication common carrier subject to the whole or part of the Communications Act of 1934, as amended.

§64.803 Definitions.

For the purposes of this subpart:

(a) *Candidate* means an individual who seeks nomination for election, or election, to Federal office, whether or not such individual is elected, and an individual shall be deemed to seek nomination for election, or election, if he has (1) taken the action necessary under the law of a State to qualify himself for nomination for election, or election, to Federal office, or (2) received contributions or made expenditures, or has given his consent for any other person to receive contributions or make expenditures, with a view to bringing about his nomination for election, or election, to such office.

(b) *Election* means (1) a general, special, primary, or runoff election, (2) a convention or caucus of a political party held to nominate a candidate, (3) a primary election held for the selection of delegates to a national nominating convention of a political party, and (4) a primary election held for the expression of a preference for the nomination of persons for election to the office of President.

(c) *Federal office* means the office of President or Vice President of the United States: or of Senator or Representative in, or Delegate or Resident Commissioner to, the Congress of the United States.

(d) *Person* means an individual, partnership, committee, association, corporation, labor organization, and any other organization or group of persons.

(e) *Unsecured credit* means the furnishing of service without maintaining on a continuing basis advance payment, deposit, or other security, that is designed to assure payment of the estimated amount of service for each future 2 months period, with revised estimates to be made on at least a monthly basis.

§ 64.804 Rules governing the extension of unsecured credit to candidates or persons on behalf of such candidates for Federal office for interstate and foreign common carrier communication services.

(a) There is no obligation upon a carrier to extend unsecured credit for interstate and foreign communication services to a candidate or person on behalf of such candidate for Federal office. However, if the carrier chooses to extend such unsecured credit, it shall comply with the requirements set forth in paragraphs (b) through (g) of this section.

(b) If a carrier decides to extend unsecured credit to any candidate for Federal office or any person on behalf of such candidate, then unsecured credit shall be extended on substantially equal terms and conditions to all candidates and all persons on behalf of all candidates for the same office, with due regard for differences in the estimated quantity of service to be furnished each such candidate or person.

(c) Before extending unsecured credit, a carrier shall obtain a signed written application for service which shall identify the applicant and the candidate and state whether or not the candidate assumes responsibility for the charges, and which shall also expressly state as follows:

(1) That service is being requested by the applicant or applicants and that the person or persons making the application will be individually, jointly and severally liable for the payment of all charges; and

(2) That the applicant(s) understands that the carrier will (under the provisions of paragraph (d) of this section) discontinue service upon written notice if any amount due is not paid upon demand.

(d) If charges for services rendered are not paid to the carrier within 15 days from rendition of a bill therefor, the carrier shall forthwith at the end of the 15-day period serve written notice on the applicant of intent to discontinue service within 7 days of date of such notice for nonpayment and shall discontinue service at the end of the 7-day period unless all such sums due are paid in full within such 7-day period.

(e) Each carrier shall take appropriate action at law to collect any unpaid balance on an account for interstate and foreign communication services rendered to a candidate or person on behalf of such candidate prior to the expiration of the statute of limitations under section 415(a) of the Communications Act of 1934, as amended.

(f) The records of each account, involving the extension by a carrier of unsecured credit to a candidate or person on behalf of such candidate for common carrier communications services shall be maintained by the carrier so as to show separately, for interstate and foreign communication services all charges, credits, adjustments, and security, if any, and balance receivable.

(g) On or before January 31 and July 31, 1973, and corresponding dates of each year thereafter, each carrier which had operating revenues in the preceding year in excess of $1 million shall file with the Commission a report by account of any amount due and unpaid, as of the end of the month prior to the reporting date, for interstate and foreign communication services rendered to a candidate or person on behalf of such candidate when such amount results from the extension of unsecured credit. Each report shall include the following information:

(1) Name of candidate.

(2) Name and address of person or persons applying for service.

(3) Balance due carrier.

(4) Reason for nonpayment.

(5) Payment arrangements, if any.

(6) Date service discontinued.

(7) Date, nature and status of any action taken at law in compliance with paragraph (e) of this section.

Subpart I—Allocation of Costs

§ 64.901 Allocation of costs.

(a) Carriers required to separate their regulated costs from nonregulated costs shall use the attributable cost method of cost allocation for such purpose.

(b) In assigning or allocating costs to regulated and nonregulated activities, carriers shall follow the principles described herein.

(1) Tariffed services provided to a nonregulated activity will be charged

to the nonregulated activity at the tariffed rates and credited to the regulated revenue account for that service.

(2) Costs shall be directly assigned to either regulated or nonregulated activities whenever possible.

(3) Costs which cannot be directly assigned to either regulated or nonregulated activities will be described as common costs. Common costs shall be grouped into homogeneous cost categories designed to facilitate the proper allocation of costs between a carrier's regulated and nonregulated activities. Each cost category shall be allocated between regulated and nonregulated activities in accordance with the following hierarchy:

(i) Whenever possible, common cost categories are to be allocated based upon direct analysis of the origin of the cost themselves.

(ii) When direct analysis is not possible, common cost categories shall be allocated based upon an indirect, cost-causative linkage to another cost category (or group of cost categories) for which a direct assignment or allocation is available.

(iii) When neither direct nor indirect measures of cost allocation can be found, the cost category shall be allocated based upon a general allocator computed by using the ratio of all expenses directly assigned or attributed to regulated and nonregulated activities.

(4) The allocation of central office equipment and outside plant investment costs between regulated and nonregulated activities shall be based upon the relative regulated and nonregulated usage of the investment during the calendar year when nonregulated usage is greatest in comparison to regulated usage during the three calendar years beginning with the calendar year during which the investment usage forecast is filed.

[52 FR 6560, Mar. 4, 1987, as amended at 52 FR 39534, Oct. 22, 1987; 54 FR 49762, Dec. 1, 1989]

§64.902 Transactions with affiliates.

Except for carriers which employ average schedules in lieu of determining their costs, all carriers subject to §64.901 are also subject to the provisions of §32.27 of this chapter concerning transactions with affiliates.

[55 FR 30461, July 26, 1990]

§64.903 Cost allocation manuals.

(a) Each local exchange carrier with annual operating revenues equal to or above the indexed revenue threshold, as defined in §32.9000 of this chapter, shall file with the Commission a manual containing the following information regarding its allocation of costs between regulated and nonregulated activities:

(1) A description of each of the carrier's nonregulated activities;

(2) A list of all the activities to which the carrier now accords incidental accounting treatment and the justification therefor;

(3) A chart showing all of the carrier's corporate affiliates;

(4) A statement identifying each affiliate that engages in or will engage in transactions with the carrier and describing the nature, terms and frequency of each transaction;

(5) A cost apportionment table showing, for each account containing costs incurred in providing regulated services, the cost pools with that account, the procedures used to place costs into each cost pool, and the method used to apportion the costs within each cost pool between regulated and nonregulated activities; and

(6) A description of the time reporting procedures that the carrier uses, including the methods or studies designed to measure and allocate nonproductive time.

(b) Each carrier shall ensure that the information contained in its cost allocation manual is accurate. Carriers must update their cost allocation manuals at least annually, except that changes to the cost apportionment table and to the description of time reporting procedures must be filed at least 60 days before the carrier plans to implement the changes. Annual cost allocation manual updates shall be filed on or before the last working day of each calendar year. Proposed changes in the description of time reporting procedures, the statement concerning affiliate transactions, and the cost apportionment table must be accompanied by a statement quantifying

the impact of each change on regulated operations. Changes in the description of time reporting procedures and the statement concerning affiliate transactions must be quantified in $100,000 increments at the account level. Changes in cost apportionment tables must be quantified in $100,000 increments at the cost pool level. The Chief, Common Carrier Bureau may suspend any such changes for a period not to exceed 180 days, and may thereafter allow the change to become effective or prescribe a different procedure.

(c) The Commission may by order require any other communications common carrier to file and maintain a cost allocation manual as provided in this section.

[57 FR 4375, Feb. 5, 1992, as amended at 59 FR 46358, Sept. 8, 1994; 61 FR 50246, Sept. 25, 1996]

§ 64.904 Independent audits.

(a) Each local exchange carrier required by this part or by Commission order to file a cost allocation manual shall have performed annually, by an independent auditor, an audit that provides a positive option on whether the applicable data shown in the carrier's annual report required by § 43.21(f)(2) of this chapter presents fairly, in all material respects, the information of the carrier required to be set forth therein in accordance with the carrier's cost allocation manual, the Commission's Joint Cost Orders issued in conjuction with CC Docket No. 86–111 and the Commission's rules and regulations including §§ 32.23, 32.27, 64.901 and 64.903 in force as of the date of the auditor's report. The audit shall be conducted in accordance with generally accepted auditing standards, except as otherwise directed by the Chief, Common Carrier Bureau.

(b) The report of the independent auditor shall be filed at the time that the local exchange carrier files the annual report required by § 43.21(f)(2) of this chapter.

[57 FR 4375, Feb. 5, 1992]

Subpart J—International Settlements Policy and Waivers

§ 64.1001 International settlements policy and waivers.

(a) The procedures set forth in this rule are subject to Commission policies on international operating agreements in CC Dkt. No. 90–337.

(b) If the accounting rate referred to in § 43.51(d)(1) of this chapter is lower than the accounting rate in effect in the operating agreement of another carrier providing service to or from the same foreign point, and there is no modification in the other terms and conditions referred to in § 43.51(d)(1) of this chapter, the carrier must file a notification letter under paragraph (e) of this section.

(c) If the amendment referred to in § 43.51(d)(2) of this chapter is a simple reduction in the accounting rate, and there is no modification in the other terms and conditions referred to in § 43.51(d)(2) of this chapter, the carrier must file a notification letter under paragraph (e) of this section.

(d) If the operating agreement or amendment referred to in §§ 43.51 (d)(1) and (d)(2) of this chapter is not subject to notification under paragraphs (b) and (c) of this section, the carrier must file a waiver request under paragraph (f) of this section.

(e) A notification letter must contain the following information:

(1) The applicable international service;

(2) The name of the foreign telecommunications administration;

(3) The present accounting rate (including any surcharges);

(4) The new accounting rate (including any surcharges);

(5) The effective date (see paragraph (h) of this section);

(6) A statement that the accounting rate will be divided 50–50; and

(7) A statement that there has been no other modification in the operating agreement with the foreign correspondent regarding the exchange of services, interchange or routing of traffic and matters concerning rates, accounting

rates, division of tolls, or the basis of settlement of traffic balances.

(f) A waiver request must contain the following information:

(1) The applicable international service;

(2) The name of the foreign telecommunications administration;

(3) The present accounting rate (including any surcharges);

(4) The new accounting rate (including any surcharges);

(5) The effective date;

(6) The division of the accounting rate;

(7) An explanation of the proposed modification(s) in the operating agreement with the foreign correspondent.

(g) Notification letters and waiver requests must contain notarized statements that the filing carrier:

(1) Has not bargained for, nor has knowledge of, exclusive availability of the new accounting rate;

(2) Has not bargained for, nor has any indication that it will receive, more than its proportionate share of return traffic; and

(3) Has informed the foreign administration that U.S. policy requires that competing U.S. carriers have access to accounting rates negotiated by the filing carrier with the foreign administration on a nondiscriminatory basis.

(h) The operating agreement or amendment subject to a notification letter is effective on the date the carrier files the notification letter; *provided that* the notification letter specifies an effective date for the modification that is later than the filing date; *provided further that,* if the purpose of the amendment is to match an accounting rate reduction specified in a notification letter previously filed by another carrier for the same point, the filing carrier may specify in the amendment and notification letter a retroactive effective date identical to that on which the previously-filed reduction became effective.

(i) If a carrier files a notification letter for an operating agreement or amendment that should have been filed as a waiver request, the Bureau will return the notification letter to the filing carrier and the Bureau will notify the carrier that, before it can implement the proposed modification, it must file a waiver request under paragraph (f) of this section.

(j) An operating agreement or amendment filed under a waiver request cannot become effective until the waiver has been granted under paragraph (l) of this section.

(k) On the same day the notification letter or waiver request is filed, carriers must serve a copy of the notification letter or waiver request on all carriers providing the same or similar service to the foreign administration identified in the filing.

(l) All waiver requests will be subject to a twenty-one (21) day pleading period for objections or comments, commencing the date after the request is filed. If the waiver request is not complete when filed, the carrier will be notified that additional information is to be submitted, and a new 21 day pleading period will begin when the additional information is filed. The waiver will be deemed granted as of the twenty-second (22nd) day without any formal staff action being taken; *provided*

(1) No objections have been filed, and

(2) The International Bureau has not notified the carrier that grant of the waiver may not serve the public interest and that implementation of the proposed modification must await formal staff action on the waiver request. If objections or comments are filed, the carrier requesting the waiver may file a response pursuant to §1.45 of the Commission's rules, 47 CFR 1.45. Waiver requests that are formally opposed must await formal action by the International Bureau before the proposed modification can be implemented.

[56 FR 25372, June 4, 1991, as amended at 58 FR 4354, Jan. 14, 1993; 60 FR 5333, Jan. 27, 1995]

Subpart K—Changing Long Distance Service

§ 64.1100 Verification of orders for long distance service generated by telemarketing.

No IXC shall submit to a LEC a primary interexchange carrier (PIC) change order generated by telemarketing unless and until the order has first been confirmed in accordance with the following procedures:

(a) The IXC has obtained the customer's written authorization in a form that meets the requirements of § 64.1150.

(b) The IXC has obtained the customer's electronic authorization, placed from the telephone number(s) on which the PIC is to be changed, to submit the order that confirms the information described in paragraph (a) of this section to confirm the authorization. IXCs electing to confirm sales electronically shall establish one or more toll-free telephone numbers exclusively for that purpose. Calls to the number(s) will connect a customer to a voice response unit, or similar mechanism, that records the required information regarding the PIC change, including automatically recording the originating ANI; or

(c) An appropriately qualified and independent third party operating in a location physically separate from the telemarketing representative has obtained the customer's oral authorization to submit the PIC change order that confirms and includes appropriate verification data (e.g., the customer's date of birth or social security number); or

(d) Within three business days of the customer's request for a PIC change, the IXC must send each new customer an information package by first class mail containing at least the following information concerning the requested change:

(1) The information is being sent to confirm a telemarketing order placed by the customer within the previous week;

(2) The name of the customer's current IXC;

(3) The name of the newly requested IXC;

(4) A description of any terms, conditions, or charges that will be incurred;

(5) The name of the person ordering the change;

(6) The name, address, and telephone number of both the customer and the soliciting IXC;

(7) A postpaid postcard which the customer can use to deny, cancel or confirm a service order;

(8) A clear statement that if the customer does not return the postcard the customer's long distance service will be switched within 14 days after the date the information package was mailed to [name of soliciting carrier];

(9) The name, address, and telephone number of a contact point at the Commission for consumer complaints; and

(10) IXCs must wait 14 days after the form is mailed to customers before submitting their PIC change orders to LECs. If customers have cancelled their orders during the waiting period, IXCs, of course, cannot submit the customer's orders to LECs.

[57 FR 4740, Feb. 7, 1992, as amended at 60 FR 35853, July 12, 1995]

§ 64.1150 Letter of agency form and content.

(a) An interchange carrier shall obtain any necessary written authorization from a subscriber for a primary interexchange carrier change by using a letter of agency as specified in this section. Any letter of agency that does not conform with this section is invalid.

(b) The letter of agency shall be a separate document (an easily separable document containing only the authorizing language described in paragraph (e) of this section) whose sole purpose is to authorize an interexchange carrier to initiate a primary interexchange carrier change. The letter of agency must be signed and dated by the subscriber to the telephone line(s) requesting the primary interexchange carrier change.

(c) The letter of agency shall not be combined with inducements of any kind on the same document.

(d) Notwithstanding paragraphs (b) and (c) of this section, the letter of agency may be combined with checks that contain only the required letter of agency language prescribed in paragraph (e) of this section and the necessary information to make the check a negotiable instrument. The letter of agency check shall not contain any promotional language or material. The letter of agency check shall contain, in easily readable, bold-face type on the front of the check, a notice that the consumer is authorizing a primary interexchange carrier change by signing the check. The letter of agency language also shall be placed near the signature line on the back of the check.

(e) At a minimum, the letter of agency must be printed with a type of sufficient size and readable type to be clearly legible and must contain clear and unambiguous language that confirms:

(1) The subscriber's billing name and address and each telephone number to be covered by the primary interexchange carrier change order;

(2) The decision to change the primary interexchange carrier from the current interexchange carrier to the prospective interexchange carrier;

(3) That the subscriber designates the interexchange carrier to act as the subscriber's agent for the primary interexchange carrier change;

(4) That the subscriber understands that only one interexchange carrier may be designated as the subscriber's interstate primary interexchange carrier for any one telephone number. To the extent that a jurisdiction allows the selection of additional primary interexchange carriers (e.g., for intrastate or international calling), the letter of agency must contain separate statements regarding those choices. Any carrier designated as a primary interexchange carrier must be the carrier directly setting the rates for the subscriber. One interexchange carrier can be both a subscriber's interstate primary interexchange carrier and a subscriber's intrastate primary interexchange carrier; and

(5) That the subscriber understands that any primary interexchange carrier selection the subscriber chooses may involve a charge to the subscriber for changing the subscriber's primary interexchange carrier.

(f) Letters of agency shall not suggest or require that a subscriber take some action in order to retain the subscriber's current interexchange carrier.

(g) If any portion of a letter of agency is translated into another language, then all portions of the letter of agency must be translated into that language.

[60 FR 35853, July 12, 1995]

Subpart L—Restrictions on Telephone Solicitation

§64.1200 Delivery restrictions.

(a) No person may:

(1) Initiate any telephone call (other than a call made for emergency purposes or made with the prior express consent of the called party) using an automatic telephone dialing system or an artificial or prerecorded voice,

(i) To any emergency telephone line, including any 911 line and any emergency line of a hospital, medical physician or service office, health care facility, poison control center, or fire protection or law enforcement agency;

(ii) To the telephone line of any guest room or patient room of a hospital, health care facility, elderly home, or similar establishment; or

(iii) To any telephone number assigned to a paging service, cellular telephone service, specialized mobile radio service, or other radio common carrier service, or any service for which the called party is charged for the call;

(2) Initiate any telephone call to any residential telephone line using an artificial or prerecorded voice to deliver a message without the prior express consent of the called party, unless the call is initiated for emergency purposes or is exempted by §64.1200(c) of this section.

(3) Use a telephone facsimile machine, computer, or other device to send an unsolicited advertisement to a telephone facsimile machine.

(4) Use an automatic telephone dialing system in such a way that two or more telephone lines of a multi-line business are engaged simultaneously.

(b) For the purpose of §64.1200(a) of this section, the term *emergency purposes* means calls made necessary in any situation affecting the health and safety of consumers.

(c) The term *telephone call* in §64.1200(a)(2) of this section shall not include a call or message by, or on behalf of, a caller:

(1) That is not made for a commercial purpose,

(2) That is made for a commercial purpose but does not include the transmission of any unsolicited advertisement,

(3) To any person with whom the caller has an established business relationship at the time the call is made, or

(4) Which is a tax-exempt nonprofit organization.

(d) All artificial or prerecorded telephone messages delivered by an automatic telephone dialing system shall:

(1) At the beginning of the message, state clearly the identity of the business, individual, or other entity initiating the call, and

(2) During or after the message, state clearly the telephone number (other than that of the autodialer or prerecorded message player which placed the call) or address of such business, other entity, or individual.

(e) No person or entity shall initiate any telephone solicitation to a residential telephone subscriber:

(1) Before the hour of 8 a.m. or after 9 p.m. (local time at the called party's location), and

(2) Unless such person or entity has instituted procedures for maintaining a list of persons who do not wish to receive telephone solicitations made by or on behalf of that person or entity. The procedures instituted must meet the following minimum standards:

(i) *Written policy*. Persons or entities making telephone solicitations must have a written policy, available upon demand, for maintaining a do-not-call list.

(ii) *Training of personnel engaged in telephone solicitation*. Personnel engaged in any aspect of telephone solicitation must be informed and trained in the existence and use of the do-not-call list.

(iii) *Recording, disclosure of do-not-call requests.* If a person or entity making a telephone solicitation (or on whose behalf a solicitation is made) receives a request from a residential telephone subscriber not to receive calls from that person or entity, the person or entity must record the request and place the subscriber's name and telephone number on the do-not-call list at the time the request is made. If such requests are recorded or maintained by a party other than the person or entity on whose behalf the solicitation is made, the person or entity on whose behalf the solicitation is made will be liable for any failures to honor the do-not-call request. In order to protect the consumer's privacy, persons or entities must obtain a consumer's prior express consent to share or forward the consumer's request not to be called to a party other than the person or entity on whose behalf a solicitation is made or an affiliated entity.

(iv) *Identification of telephone solicitor.* A person or entity making a telephone solicitation must provide the called party with the name of the individual caller, the name of the person or entity on whose behalf the call is being made, and a telephone number or address at which the person or entity may be contacted. If a person or entity makes a solicitation using an artificial or prerecorded voice message transmitted by an autodialer, the person or entity must provide a telephone number other than that of the autodialer or prerecorded message player which placed the call. The telephone number provided may not be a 900 number or any other number for which charges exceed local or long distance transmission charges.

(v) *Affiliated persons or entities.* In the absence of a specific request by the subscriber to the contrary, a residential subscriber's do-not-call request shall apply to the particular business entity making the call (or on whose behalf a call is made), and will not apply to affiliated entities unless the consumer reasonably would expect them to be included given the identification of the caller and the product being advertised.

(vi) *Maintenance of do-not-call lists.* A person or entity making telephone solicitations must maintain a record of a caller's request not to receive future telephone solicitations. A do not call request must be honored for 10 years from the time the request is made.

(f) As used in this section:

(1) The terms *automatic telephone dialing system* and *autodialer* mean equipment which has the capacity to store or produce telephone numbers to be called using a random or sequential number generator and to dial such numbers.

(2) The term *telephone facsimile machine* means equipment which has the capacity to transcribe text or images, or both, from paper into an electronic signal and to transmit that signal over a regular telephone line, or to transcribe text or images (or both) from an

electronic signal received over a regular telephone line onto paper.

(3) The term *telephone solicitation* means the initiation of a telephone call or message for the purpose of encouraging the purchase or rental of, or investment in, property, goods, or services, which is transmitted to any person, but such term does not include a call or message:

(i) To any person with that person's prior express invitation or permission;

(ii) To any person with whom the caller has an established business relationship; or

(iii) By or on behalf of a tax-exempt nonprofit organization.

(4) The term *established business relationship* means a prior or existing relationship formed by a voluntary two-way communication between a person or entity and a residential subscriber with or without an exchange of consideration, on the basis of an inquiry, application, purchase or transaction by the residential subscriber regarding products or services offered by such person or entity, which relationship has not been previously terminated by either party.

(5) The term *unsolicited advertisement* means any material advertising the commercial availability or quality of any property, goods, or services which is transmitted to any person without that person's prior express invitation or permission.

[57 FR 48335, Oct. 23, 1992; 57 FR 53293, Nov. 9, 1992, as amended at 60 FR 42069, Aug. 15, 1995]

§ 64.1201 Restrictions on billing name and address disclosure.

(a) As used in this section:

(1) The term *billing name and address* means the name and address provided to a local exchange company by each of its local exchange customers to which the local exchange company directs bills for its services.

(2) The term ''telecommunications service provider'' means interexchange carriers, operator service providers, enhanced service providers, and any other provider of interstate telecommunications services.

(3) The term *authorized billing agent* means a third party hired by a telecommunications service provider to perform billing and collection services for the telecommunications service provider.

(4) The term *bulk basis* means billing name and address information for all the local exchange service subscribers of a local exchange carrier.

(5) The term *LEC joint use card* means a calling card bearing an account number assigned by a local exchange carrier, used for the services of the local exchange carrier and a designated interexchange carrier, and validated by access to data maintained by the local exchange carrier.

(b) No local exchange carrier providing billing name and address shall disclose billing name and address information to any party other than a telecommunications service provider or an authorized billing and collection agent of a telecommunications service provider.

(c)(1) No telecommunications service provider or authorized billing and collection agent of a telecommunications service provider shall use billing name and address information for any purpose other than the following:

(i) Billing customers for using telecommunications services of that service provider and collecting amounts due;

(ii) Any purpose associated with the ''equal access'' requirement of *United States* v. *AT&T* 552 F.Supp. 131 (D.D.C. 1982); and

(iii) Verification of service orders of new customers, identification of customers who have moved to a new address, fraud prevention, and similar nonmarketing purposes.

(2) In no case shall any telecommunications service provider or authorized billing and collection agent of a telecommunications service provider disclose the billing name and address information of any subscriber to any third party, except that a telecommunications service provider may disclose billing name and address information to its authorized billing and collection agent.

(d) [Reserved]

(e)(1) All local exchange carriers providing billing name and address information shall notify their subscribers that:

(i) The subscriber's billing name and address will be disclosed, pursuant to

Policies and Rules Concerning Local Exchange Carrier Validation and Billing Information for Joint Use Calling Cards, CC Docket No. 91–115, FCC 93–254, adopted May 13, 1993, whenever the subscriber uses a LEC joint use card to pay for services obtained from the telecommunications service provider, and

(ii) The subscriber's billing name and address will be disclosed, pursuant to Policies and Rules Concerning Local Exchange Carrier Validation and Billing Information for Joint Use Calling Cards, CC Docket No. 91–115, FCC 93–254, adopted May 13, 1993, whenever the subscriber accepts a third party or collect call to a telephone station provided by the LEC to the subscriber.

(2) In addition to the notification specified in paragraph (e)(1) of this section, all local exchange carriers providing billing name and address information shall notify their subscribers with unlisted or nonpublished telephone numbers that:

(i) Customers have a right to request that their BNA not be disclosed, and that customers may prevent BNA disclosure for third party and collect calls as well as calling card calls;

(ii) LECs will presume that unlisted and nonpublished end users consent to disclosure and use of their BNA if customers do not affirmatively request that their BNA not be disclosed; and

(iii) The presumption in favor of consent for disclosure will begin 30 days after customers receive notice.

(3) No local exchange carrier shall disclose the billing name and address information associated with any calling card call made by any subscriber who has affirmatively withheld consent for disclosure of BNA information, or for any third party or collect call charged to any subscriber who has affirmatively withheld consent for disclosure of BNA information.

[53 FR 36145, July 6, 1993, as amended at 58 FR 65671, Dec. 16, 1993; 61 FR 8880, Mar. 6, 1996]

Subpart M—Competitive Payphone Compensation

§ 64.1301 Competitive payphone compensation.

(a) Each competitive payphone shall be eligible for compensation in the amount of $6 per payphone per month for originating interstate access code calls. *Competitive payphones* are those pay telephones not owned or controlled by the local exchange carriers (LECs) or AT&T.

(b) This compensation shall be paid by interexchange carriers (IXCs) that both:

(1) Earn annual toll revenues in excess of $100 million, as reported in the FCC staff report entitled ''Long Distance Market Shares;'' and

(2) Provide live or automated operator services. Notwithstanding this provision, an IXC need not pay compensation if, within 30 days after public notice of the Long Distance Market Shares report, it files with the Chief, Common Carrier Bureau, a notarized affidavit stating that the IXC does not receive end user-initiated access code calls from payphones on which it is not the presubscribed carrier. The affidavit must be signed by the corporate officer with principal responsibility for operator service operations of the IXC. Each individual IXC's compensation obligation shall be set in accordance with its relative share of toll revenues among IXCs required to pay compensation. For example, if total toll revenues of IXCs required to pay compensation is $50 billion, and one of these IXCs earned $5 billion in total toll revenues, the IXC must pay $.60 per payphone per month.

(c) Initial compensation obligations are set forth in Appendix B of the Commission's Second Report and Order in CC Docket No. 91–35, released May 8, 1992. Compensation obligations shall be adjusted periodically if the operational status of any eligible IXC changes or in accordance with revised toll revenue data. In either such event, the Common Carrier Bureau shall issue a public notice showing the revised compensation obligations. These revised obligations shall become effective on the date specified in the public notice.

(d) IXCs obligated to pay compensation and competitive payphone owners are responsibile for establishing their own billing or payment arrangements.

(e) LECs shall provide IXCs paying compensation under paragraphs (b) and

(c) of this section with a list each quarter of all telephone lines receiving customer-owned coin-operated telephone (COCOT) service in the LEC's region as of the date the list was generated.

(f) A competitive payphone owner (PPO) that seeks compensation for competitive payphones that are not included on a LEC COCOT list satisfies its obligation to provide alternative reasonable verification to an IXC if it provides to that IXC:

(1) A notarized affidavit, signed by the president of the company, attesting that each of the payphones for which the PPO seeks compensation is a competitive payphone that was in working order as of the last day of the compensation period); and

(2) Corroborating evidence that each such payphone is owned by the PPO seeking compensation and was in working order on the last day of the compensation period. Corroborating evidence shall include, at a minimum, the telephone bill for the last month of the billing quarter indicating use of a line screening service.

[57 FR 21040, May 18, 1992, as amended at 58 FR 57750, Oct. 27, 1993; 60 FR 49234, Sept. 22, 1995]

Subpart N—Expanded Interconnection

§ 64.1401 Expanded interconnection.

(a) Every local exchange carrier that is classified as a Class A company under § 32.11 of this chapter and that is not a National Exchange Carrier Association interstate tariff participant, as provided in part 69, subpart G of this chapter, shall offer expanded interconnection for interstate special access services at their central offices that are classified as end offices or serving wire centers, and at other rating points used for interstate special access.

(b) The local exchange carriers specified in paragraph (a) of this section shall offer expanded interconnection for interstate switched transport services:

(1) In their central offices that are classified as end offices or serving wire centers, as well as at all tandem offices housed in buildings containing such carriers' end offices or serving wire centers for which interstate switched transport expanded interconnection has been tariffed;

(2) Upon *bona fide* request, in tandem offices housed in buildings not containing such carriers' end offices or serving wire centers, or in buildings containing the carriers' end offices or serving wire centers for which interstate switched transport expanded interconnection has not been tariffed; and

(3) Upon *bona fide* request, at remote nodes/switches that serve as rating points for interstate switched transport and that are capable of routing outgoing interexchange access traffic to interconnectors and in which interconnectors can route terminating traffic to such carriers. No such carrier is required to enhance remote nodes/switches or to build additional space to accommodate interstate switched transport expanded interconnection at these locations.

(c) The local exchange carriers specified in paragraph (a) of this section shall offer expanded interconnection for interstate special access and switched transport services through virtual collocation, except that they may offer physical collocation, instead of virtual collocation, in specific central offices, as a service subject to non-streamlined communications common carrier regulation under Title II of the Communications Act (47 U.S.C. 201–228).

(d) For the purposes of this subpart, physical collocation means an offering that enables interconnectors:

(1) To place their own equipment needed to terminate basic transmission facilities, including optical terminating equipment and multiplexers, within or upon the local exchange carrier's central office buildings;

(2) To use such equipment to connect interconnectors' fiber optic systems or microwave radio transmission facilities (where reasonably feasible) with the local exchange carrier's equipment and facilities used to provide interstate special access services;

(3) To enter the local exchange carrier's central office buildings, subject to reasonable terms and conditions, to install, maintain, and repair the equipment described in paragraph (d)(1) of this section; and

(4) To obtain reasonable amounts of space in central offices for the equipment described in paragraph (d)(1) of this section, allocated on a first-come, first-served basis.

(e) For purposes of this subpart, virtual collocation means an offering that enables interconnectors:

(1) To designate or specify equipment needed to terminate basic transmission facilities, including optical terminating equipment and multiplexers, to be located within or upon the local exchange carrier's buildings, and dedicated to such interconnectors' use,

(2) To use such equipment to connect interconnectors' fiber optic systems or microwave radio transmission facilities (where reasonably feasible) with the local exchange carrier's equipment and facilities used to provide interstate special and switched access services, and

(3) To monitor and control their communications channels terminating in such equipment.

(f) Under both physical collocation offering and virtual collocation offerings for expanded interconnection of fiber optic facilities, local exchange carriers shall provide:

(1) An interconnection point or points at which the fiber optic cable carrying an interconnectors' circuits can enter each local exchange carrier location, provided that the local exchange carrier shall designate interconnection points as close as reasonably possible to each location; and

(2) At least two such interconnection points at any local exchange carrier location at which there are at least two entry points for the local exchange carrier's cable facilities, and space is available for new facilities in at least two of those entry points.

(g) The local exchange carriers specified in paragraph (a) of this section shall offer signalling for tandem switching, as defined in § 69.2(vv) of this chapter, at central offices that are classified as equal office end offices or serving wire centers, or at signal transfer points if such information is offered via common channel signalling.

[57 FR 54331, Nov. 18, 1992, as amended at 58 FR 48762, Sept. 17, 1993; 59 FR 32930, June 27, 1994; 59 FR 38930, Aug. 1, 1994]

§ 64.1402 Rights and responsibilities of interconnectors.

(a) For the purposes of this subpart, an interconnector means a party taking expanded interconnection offerings. Any party shall be eligible to be an interconnector.

(b) Interconnectors shall have the right, under expanded interconnection, to interconnect their fiber optic systems and, where reasonably feasible, their microwave transmission facilities.

(c) Interconnectors shall not be allowed to use interstate special access expanded interconnection offerings to connect their transmission facilities with the local exchange carrier's interstate switched services until that local exchange carrier's tariffs implementing expanded interconnection for switched transport have become effective.

[57 FR 54331, Nov. 18, 1992, as amended at 61 FR 43160, Aug. 21, 1996]

Subpart O—Interstate Pay-Per-Call and Other Information Services

SOURCE: 58 FR 44773, Aug. 25, 1993, unless otherwise noted.

§ 64.1501 Definitions.

For purposes of this subpart, the following definitions shall apply:

(a) *Pay-per-call service* means any service:

(1) In which any person provides or purports to provide:

(i) Audio information or audio entertainment produced or packaged by such person;

(ii) Access to simultaneous voice conversation services; or

(iii) Any service, including the provision of a product, the charges for which are assessed on the basis of the completion of the call;

(2) For which the caller pays a per-call or per-time-interval charge that is greater than, or in addition to, the charge for transmission of the call; and

(3) Which is accessed through use of a 900 number;

(4) Provided, however, such term does not include directory services provided by a common carrier or its affiliate or by a local exchange carrier or its affiliate, or any service for which users are

assessed charges only after entering into a presubscription or comparable arrangement with the provider of such service.

(b) *Presubscription or comparable arrangement* means a contractual agreement in which:

(1) The service provider clearly and conspicuously discloses to the consumer all material terms and conditions associated with the use of the service, including the service provider's name and address, a business telephone number which the consumer may use to obtain additional information or to register a complaint, and the rates for the service;

(2) The service provider agrees to notify the consumer of any future rate changes;

(3) The consumer agrees to use the service on the terms and conditions disclosed by the service provider; and

(4) The service provider requires the use of an identification number or other means to prevent unauthorized access to the service by nonsubscribers;

(5) Provided, however, that disclosure of a credit, prepaid account, debit, charge, or calling card number, along with authorization to bill that number, made during the course of a call to an information service shall constitute a presubscription or comparable arrangement if an introductory message containing the information specified in § 64.1504(c)(2) is provided prior to, and independent of, assessment of any charges. No other action taken by a consumer during the course of a call to an information service, for which charges are assessed, can create a presubscription or comparable arrangement.

(6) Provided, that a presubscription arrangement to obtain information services provided by means of a toll-free number shall conform to the requirements of § 64.1504(c).

(c) *Calling card* means an identifying number or code unique to the individual, that is issued to the individual by a common carrier and enables the individual to be charged by means of a phone bill for charges incurred independent of where the call originates.

[61 FR 39087, July 26, 1996]

EFFECTIVE DATE NOTE: At 61 FR 39087, July 26, 1996, § 64.1501 was revised, effective Dec. 23, 1996. For the convenience of the user, the superseded text is set forth as follows:

§ 64.1501 Definitions.

(a) *Pay-per-call service* means any service:

(1) In which any person provides or purports to provide:

(i) Audio information or audio entertainment produced or packaged by such person;

(ii) Access to simultaneous voice conversation services; or

(iii) Any service, including the provision of a product, the charges for which are assessed on the basis of the completion of the call;

(2) For which the caller pays a per-call or per-time-interval charge that is greater than, or in addition to, the charge for transmission of the call; and

(3) Which is accessed through use of a 900 number;

(4) Provided, however, such term does not include directory services provided by a common carrier or its affiliate or by a local exchange carrier or its affiliate, or any service the charge for which is tariffed, or any service for which users are assessed charges only after entering into a presubscription or comparable arrangement with the provider of such service.

(b) *Presubscription or comparable arrangement* means a contractual agreement in which:

(1) The service provider clearly and conspicuously discloses to the consumer all material terms and conditions associated with the use of the service, including the service provider's name and address, a business telephone number which the consumer may use to obtain additional information or to register a complaint, and the rates for the service;

(2) The service provider agrees to notify the consumer of any future rate changes;

(3) The consumer agrees to use the service on the terms and conditions disclosed by the service provider;

(4) The service provider requires the use of an identification number or other means to prevent unauthorized access to the service by nonsubscribers; and

(5) Provided, however, that disclosure of a credit or charge card number, along with authorization to bill that number, made during the course of a call to an information service shall constitute a presubscription or comparable arrangement if the credit or charge card is subject to the dispute resolution procedures of the Truth in Lending Act and Fair Credit Billing Act, as amended, 15 U.S.C. 1601 *et seq.* No other action taken by a consumer during the course of a call to an information service, for which charges are assessed, can create a presubscription or comparable arrangement.

[59 FR 46770, Sept. 12, 1994]

§ 64.1502 Limitations on the provision of pay-per-call services.

Any common carrier assigning a telephone number to a provider of interstate pay-per-call service shall require, by contract or tariff, that such provider comply with the provisions of this subpart and of titles II and III of the Telephone Disclosure and Dispute Resolution Act (Pub. L. No. 102–556) (TDDRA) and the regulations prescribed by the Federal Trade Commission pursuant to those titles.

§ 64.1503 Termination of pay-per-call and other information programs.

(a) Any common carrier assigning a telephone number to a provider of interstate pay-per-call service shall specify by contract or tariff that pay-per-call programs not in compliance with § 64.1502 shall be terminated following written notice to the information provider. The information provider shall be afforded a period of no less than seven and no more than 14 days during which a program may be brought into compliance. Programs not in compliance at the expiration of such period shall be terminated immediately.

(b) Any common carrier providing transmission or billing and collection services to a provider of interstate information service through any 800 telephone number, or other telephone number advertised or widely understood to be toll-free, shall promptly investigate any complaint that such service is not provided in accordance with § 64.1504 or § 64.1510(c), and, if the carrier reasonably determines that the complaint is valid, may terminate the provision of service to an information provider unless the provider supplies evidence of a written agreement that meets the requirements of this § 64.1504(c)(1).

[61 FR 39087, July 26, 1996]

EFFECTIVE DATE NOTE: At 61 FR 39087, July 26, 1996, § 64.1503 was revised, effective Dec. 23, 1996. For the convenience of the user, the superseded text is set forth as follows:

§ 64.1503 Termination of pay-per-call programs.

Any common carrier assigning a telephone number to a provider of interstate pay-per-call service shall specify by contract or tariff that pay-per-call programs not in compliance with § 64.1502 shall be terminated following written notice to the information provider. The information provider shall be afforded a period of no less than seven and no more than 14 days during which a program may be brought into compliance. Programs not in compliance at the expiration of such period shall be terminated immediately.

§ 64.1504 Restrictions on the use of toll-free numbers.

A common carrier shall prohibit by tariff or contract the use of any 800 telephone number, or other telephone number advertised or widely understood to be toll-free, in a manner that would result in:

(a) The calling party or the subscriber to the originating line being assessed, by virtue of completing the call, a charge for a call;

(b) The calling party being connected to a pay-per-call service;

(c) The calling party being charged for information conveyed during the call unless:

(1) The calling party has a written agreement (including an agreement transmitted through electronic medium) that specifies the material terms and conditions under which the information is offered and includes:

(i) The rate at which charges are assessed for the information;

(ii) The information provider's name;

(iii) The information provider's business address;

(iv) The information provider's regular business telephone number;

(v) The information provider's agreement to notify the subscriber at least one billing cycle in advance of all future changes in the rates charged for the information;

(vi) The subscriber's choice of payment method, which may be by direct remit, debit, prepaid account, phone bill, or credit or calling card and, if a subscriber elects to pay by means of phone bill, a clear explanation that the subscriber will be assessed for calls made to the information service from the subscriber's phone line;

(vii) A unique personal identification number or other subscriber-specific identifier that must be used to obtain access to the information service and instructions on its use, and, in addition, assures that any charges for services accessed by use of the subscriber's

personal identification number or subscriber-specific identifier be assessed to subscriber's source of payment elected pursuant to paragraph (c)(1)(vi) of this section; or

(2) The calling party is charged for the information by means of a credit, prepaid, debit, charge, or calling card and the information service provider includes in response to each call an introductory message that:

(i) Clearly states that there is a charge for the call;

(ii) Clearly states the service's total cost per minute and any other fees for the service or for any service to which the caller may be transferred;

(iii) Explains that the charges must be billed on either a credit, prepaid, debit, charge, or calling card;

(iv) Asks the caller for the card number;

(v) Clearly states that charges for the call begin at the end of the introductory message; and

(vi) Clearly states that the caller can hang at or before the end of the introductory message without incurring any charge whatsoever.

(d) The calling party being called back collect for the provision of audio or data information services, simultaneous voice conversation services, or products; and

(e) The calling party being assessed by virtue of the caller being asked to connect or otherwise transfer to a pay-per-call service, a charge for the call.

(f) Provided, however, that:

(1) Notwithstanding paragraph (c)(1) of this section, a written agreement that meets the requirements of that paragraph is not required for:

(i) Calls utilizing telecommunications devices for the deaf;

(ii) Directory services provided by a common carrier or its affiliate or by a local exchange carrier or its affiliate; or

(iii) Any purchase of goods or of services that are not information services.

(2) The requirements of paragraph (c)(2) of this section shall not apply to calls from repeat callers using a bypass mechanism to avoid listening to the introductory message: *Provided*, That information providers shall disable such a bypass mechanism after the institution of any price increase for a period of time determined to be sufficient by the Federal Trade Commission to give callers adequate and sufficient notice of a price increase.

[61 FR 39087, July 26, 1996]

EFFECTIVE DATE NOTE: At 61 FR 39087, July 26, 1996, § 64.1504 was revised, effective Dec. 23, 1996. For the convenience of the user, the superseded text is set forth as follows:

§ 64.1504 Restrictions on the use of 800 numbers.

Common carriers shall prohibit, by tariff or contract, the use of any telephone number beginning with an 800 service access code, or any other telephone number advertised or widely understood to be toll free, in a manner that would result in:

(a) The calling party or the subscriber to the originating line being assessed, by virtue of completing the call, a charge for the call;

(b) The calling party being connected to a pay-per-call service;

(c) The calling party being charged for information conveyed during the call unless the calling party has a presubscription or comparable arrangement; or

(d) The calling party being called back collect for the provision of audio or data information services, simultaneous voice conversation services, or products.

§ 64.1505 Restrictions on collect telephone calls.

(a) No common carrier shall provide interstate transmission or billing and collection services to an entity offering any service within the scope of § 64.1501(a)(1) that is billed to a subscriber on a collect basis at a per-call or per-time-interval charge that is greater than, or in addition to, the charge for transmission of the call.

(b) No common carrier shall provide interstate transmission services for any collect information services billed to a subscriber at a tariffed rate unless the called party has taken affirmative action clearly indicating that it accepts the charges for the collect service.

§ 64.1506 Number designation.

Any interstate service described in § 64.1501(a)(1)–(2), and not subject to the exclusions contained in § 64.1501(a)(4), shall be offered only through telephone numbers beginning with a 900 service access code.

[59 FR 46770, Sept. 12, 1994]

§ 64.1507 Prohibition on disconnection or interruption of service for failure to remit pay-per-call and similar service charges.

No common carrier shall disconnect or interrupt in any manner, or order the disconnection or interruption of, a telephone subscriber's local exchange or long distance telephone service as a result of that subscriber's failure to pay:

(a) Charges for interstate pay-per-call service;

(b) Charges for interstate information services provided pursuant to a presubscription or comparable arrangement; or

(c) Charges for interstate information services provided on a collect basis which have been disputed by the subscriber.

[58 FR 44773, Aug. 25, 1993, as amended at 59 FR 46770, Sept. 12, 1994]

§ 64.1508 Blocking access to 900 service.

(a) Local exchange carriers must offer to their subscribers, where technically feasible, an option to block access to services offered on the 900 service access code. Blocking is to be offered at no charge, on a one-time basis, to:

(1) All telephone subscribers during the period from November 1, 1993 through December 31, 1993; and

(2) Any subscriber who subscribes to a new telephone number for a period of 60 days after the new number is effective.

(b) For blocking requests not within the one-time option or outside the time frames specified in paragraph (a) of this section, and for unblocking requests, local exchange carriers may charge a reasonable one-time fee. Requests by subscribers to remove 900 services blocking must be in writing.

(c) The terms and conditions under which subscribers may obtain 900 services blocking are to be included in tariffs filed with this Commission.

§ 64.1509 Disclosure and dissemination of pay-per-call information.

(a) Any common carrier assigning a telephone number to a provider of interstate pay-per-call services shall make readily available, at no charge, to Federal and State agencies and all other interested persons:

(1) A list of the telephone numbers for each of the pay-per-call services it carries;

(2) A short description of each such service;

(3) A statement of the total cost or the cost per minute and any other fees for each such service; and

(4) A statement of the pay-per-call service provider's name, business address, and business telephone number.

(b) Any common carrier assigning a telephone number to a provider of interstate pay-per-call services and offering billing and collection services to such provider shall:

(1) Establish a local or toll-free telephone number to answer questions and provide information on subscribers' rights and obligations with regard to their use of pay-per-call services and to provide to callers the name and mailing address of any provider of pay-per-call services offered by that carrier; and

(2) Provide to all its telephone subscribers, either directly or through contract with any local exchange carrier providing billing and collection services to that carrier, a disclosure statement setting forth all rights and obligations of the subscriber and the carrier with respect to the use and payment of pay-per-call services. Such statement must include the prohibition against disconnection of basic communications services for failure to pay pay-per-call charges established by § 64.1507, the right of a subscriber to obtain blocking in accordance with § 64.1508, the right of a subscriber not to be billed for pay-per-call services not offered in compliance with federal laws and regulations established by § 64.1510(a)(iv), and the possibility that a subscriber's access to 900 services may be involuntarily blocked pursuant to § 64.1512 for failure to pay legitimate pay-per-call charges. Disclosure statements must be forwarded to:

(i) All telephone subscribers no later than 60 days after these regulations take effect;

(ii) All new telephone subscribers no later than 60 days after service is established;

(iii) All telephone subscribers requesting service at a new location no later than 60 days after service is established; and

(iv) Thereafter, to all subscribers at least once per calendar year, at intervals of not less than 6 months nor more than 18 months.

§ 64.1510 Billing and collection of pay-per-call and similar service charges.

(a) Any common carrier assigning a telephone number to a provider of interstate pay-per-call services and offering billing and collection services to such provider shall:

(1) Ensure that a subscriber is not billed for interstate pay-per-call services that such carrier knows or reasonably should know were provided in violation of the regulations set forth in this subpart or prescribed by the Federal Trade Commission pursuant to titles II or III of the TDDRA or any other federal law;

(2) In any billing to telephone subscribers that includes charges for any interstate pay-per-call service:

(i) Include a statement indicating that:

(A) Such charges are for non-communications services;

(B) Neither local nor long distances services can be disconnected for non-payment although an information provider may employ private entities to seek to collect such charges;

(C) 900 number blocking is available upon request; and

(D) Access to pay-per-call services may be involuntarily blocked for failure to pay legitimate charges;

(ii) Display any charges for pay-per-call services in a part of the bill that is identified as not being related to local and long distance telephone charges;

(iii) Specify, for each pay-per-call charge made, the type of service, the amount of the charge, and the date, time, and, for calls billed on a time-sensitive basis, the duration of the call; and

(iv) Identify the local or toll-free number established in accordance with § 64.1509(b)(1).

(b) Any common carrier offering billing and collection services to an entity providing interstate information services on a collect basis shall, to the extent possible, display the billing information in the manner described in paragraphs (a)(2)(i), (A), (B), (D) and (a)(2)(ii) of this section.

(c) If a subscriber elects, pursuant to § 64.1504(c)(1)(vi), to pay by means of a phone bill for any information service provided by through any 800 telephone number, or other telephone number advertised or widely understood to be toll-free, the phone bill shall:

(1) Include, in prominent type, the following disclaimer: ''Common carriers may not disconnect local or long distance telephone service for failure to pay disputed charges for information services;'' and

(2) Clearly list the 800 or other toll-free number dialed.

[58 FR 44773, Aug. 25, 1993, as amended at 59 FR 46771, Sept. 12, 1994; 61 FR 39088, July 26, 1996]

EFFECTIVE DATE NOTE: At 61 FR 39088, July 26, 1996, in § 64.1510, paragraph (b) was revised and paragraph (c) was added, effective Dec. 23, 1996. For the convenience of the user, the superseded text is set forth as follows:

§ 64.1510 Billing and collection of pay-per-call and similar service charges.

* * * * *

(b) Any common carrier offering billing and collection services to an entity providing interstate information services pursuant to a presubscription or comparable arrangement, or on a collect basis, shall, to the extent possible, display the billing information in the manner described in paragraphs (a)(2)(i) (A), (B), (D) and (a)(2)(ii) of this section.

§ 64.1511 Forgiveness of charges and refunds.

(a) Any carrier assigning a telephone number to a provider of interstate pay-per-call services or providing transmission for interstate information services provided pursuant to a presubscription or comparable arrangement or on a collect basis, and providing billing and collection for such services, shall establish procedures for the handling of subscriber complaints regarding charges for those services. A billing carrier is afforded discretion to set standards for determining when a subscriber's complaint warrants forgiveness, refund or credit of interstate pay-per-call or information services

charges provided that such charges must be forgiven, refunded, or credited when a subscriber has complained about such charges and either this Commission, the Federal Trade Commission, or a court of competent jurisdiction has found or the carrier has determined, upon investigation, that the service has been offered in violation of federal law or the regulations that are either set forth in this subpart or prescribed by the Federal Trade Commission pursuant to titles II or III of the TDDRA. Carriers shall observe the record retention requirements set forth in § 42.6 of this chapter except that relevant records shall be retained by carriers beyond the requirements of part 42 of this chapter when a complaint is pending at the time the specified retention period expires.

(b) Any carrier assigning a telephone number to a provider of interstate pay-per-call services but not providing billing and collection services for such services, shall, by tariff or contract, require that the provider and/or its billing and collection agents have in place procedures whereby, upon complaint, pay-per-call charges may be forgiven, refunded, or credited, provided that such charges must be forgiven, refunded, or credited when a subscriber has complained about such charges and either this Commission, the Federal Trade Commission, or a court of competent jurisdiction has found or the carrier has determined, upon investigation, that the service has been offered in violation of federal law or the regulations that are either set forth in this subpart or prescribed by the Federal Trade Commission pursuant to titles II or III of the TDDRA.

[58 FR 44773, Aug. 25, 1993, as amended at 59 FR 46771, Sept. 12, 1994]

§ 64.1512 Involuntary blocking of pay-per-call services.

Nothing in this subpart shall preclude a common carrier or information provider from blocking or ordering the blocking of its interstate pay-per-call programs from numbers assigned to subscribers who have incurred, but not paid, legitimate pay-per-call charges, except that a subscriber who has filed a complaint regarding a particular pay-per-call program pursuant to procedures established by the Federal Trade Commission under title III of the TDDRA shall not be involuntarily blocked from access to that program while such a complaint is pending. This restriction is not intended to preclude involuntary blocking when a carrier or IP has decided in one instance to sustain charges against a subscriber but that subscriber files additional separate complaints.

§ 64.1513 Verification of charitable status.

Any common carrier assigning a telephone number to a provider of interstate pay-per-call services that the carrier knows or reasonably should know is engaged in soliciting charitable contributions shall obtain verification that the entity or individual for whom contributions are solicited has been granted tax exempt status by the Internal Revenue Service.

§ 64.1514 Generation of signalling tones.

No common carrier shall assign a telephone number for any pay-per-call service that employs broadcast advertising which generates the audible tones necessary to complete a call to a pay-per-call service.

§ 64.1515 Recovery of costs.

No common carrier shall recover its cost of complying with the provisions of this subpart from local or long distance ratepayers.

Subpart P—Calling Party Telephone Number; Privacy

SOURCE: 59 FR 18319, Apr. 18, 1994, unless otherwise noted.

§ 64.1600 Definitions.

(a) *Aggregate information.* The term ''aggregate information'' means collective data that relate to a group or category of services or customers, from which individual customer identities or characteristics have been removed.

(b) *ANI.* The term ''ANI'' (automatic number identification) refers to the delivery of the calling party's billing number by a local exchange carrier to any interconnecting carrier for billing

or routing purposes, and to the subsequent delivery of such number to end users.

(c) *Calling party number.* The term Calling Party Number refers to the subscriber line number or the directory number contained in the calling party number parameter of the call set-up message associated with an interstate call on a Signaling System 7 network.

(d) *Charge number.* The term ''charge number'' refers to the delivery of the calling party's billing number in a Signaling System 7 environment by a local exchange carrier to any interconnecting carrier for billing or routing purposes, and to the subsequent delivery of such number to end users.

(e) *Privacy indicator.* The term Privacy Indicator refers to information, contained in the calling party number parameter of the call set-up message associated with an interstate call on an Signaling System 7 network, that indicates whether the calling party authorizes presentation of the calling party number to the called party.

(f) *Signaling System 7.* The term Signaling System 7 (SS7) refers to a carrier to carrier out-of-band signaling network used for call routing, billing and management.

[60 FR 29490, June 5, 1995]

§ 64.1601 Delivery requirements and privacy restrictions.

(a) *Delivery.* Common carriers using Signaling System 7 and offering or subscribing to any service based on Signaling System 7 call set functionality are required to transmit the calling party number associated with an interstate call to interconnecting carriers.

(b) *Privacy.* Originating carriers using Signaling System 7 and offering or subscribing to any service based on Signaling System 7 call set up functionality will recognize *67 dialed as the first three digits of a call (or 1167 for rotary or pulse-dialing phones) as a caller's request for privacy on an interstate call. Such carriers providing line blocking services will recognize *82 as a caller's request that privacy not be provided on an interstate call. No common carrier subscribing to or offering any service that delivers calling party number may override the privacy indicator associated with an interstate call. Carriers must arrange their CPN-based services in such a manner that when a caller requests privacy, a carrier may not reveal that caller's number or name, nor may the carrier use the number or name to allow the called party to contact the calling party. The terminating carrier must act in accordance with the privacy indicator unless the call is made to a called party that subscribes to an ANI or charge number based service and the call is paid for by the called party.

(c) *Charges.* No common carrier subscribing to or offering any service that delivers calling party number may

(1) Impose on the calling party charges associated with per call blocking of the calling party's telephone number, or

(2) Impose charges upon connecting carriers for the delivery of the calling party number parameter or its associated privacy indicator.

(d) *Exemptions.* § 64.1601 shall not apply to calling party number delivery services

(1) Used solely in connection with calls within the same limited system, including (but not limited to) a Centrex, virtual private network, or private branch exchange system;

(2) Used on a public agency's emergency telephone line or in conjunction with 911 emergency services, or on any entity's emergency assistance poison control telephone line;

(3) Provided in connection with legally authorized call tracing or trapping procedures specifically requested by a law enforcement agency.

[60 FR 29490, June 5, 1995; 60 FR 54449, Oct. 24, 1995]

§ 64.1602 Restrictions on use and sale of telephone subscriber information provided pursuant to automatic number identification or charge number services.

(a) Any common carrier providing Automatic Number Identification or charge number services on interstate calls to any person shall provide such services under a contract or tariff containing telephone subscriber information requirements that comply with this subpart. Such requirements shall:

(1) Permit such person to use the telephone number and billing information for billing and collection, routing, screening, and completion of the originating telephone subscriber's call or transaction, or for services directly related to the originating telephone subscriber's call or transaction;

(2) Prohibit such person from reusing or selling the telephone number or billing information without first

(i) Notifying the originating telephone subscriber and,

(ii) Obtaining the affirmative consent of such subscriber for such reuse or sale; and,

(3) Prohibit such person from disclosing, except as permitted by paragraphs (a) (1) and (2) of this section, any information derived from the automatic number identification or charge number service for any purpose other than

(i) Performing the services or transactions that are the subject of the originating telephone subscriber's call,

(ii) Ensuring network performance security, and the effectiveness of call delivery,

(iii) Compiling, using, and disclosing aggregate information, and

(iv) Complying with applicable law or legal process.

(b) The requirements imposed under paragraph (a) of the section shall not prevent a person to whom automatic number identification or charge number services are provided from using

(1) The telephone number and billing information provided pursuant to such service, and

(2) Any information derived from the automatic number identification or charge number service, or from the analysis of the characteristics of a telecommunications transmission, to offer a product or service that is directly related to the products or services previously acquired by that customer from such person. Use of such information is subject to the requirements of 47 CFR 64.1200 and 64.1504(c).

[60 FR 29490, June 5, 1995]

§ 64.1603 Customer notification.

Any common carrier participating in the offering of services providing calling party number, ANI, or charge number on interstate calls must notify its subscribers, individually or in conjunction with other carriers, that their telephone numbers may be identified to a called party. Such notification must be made not later than December 1, 1995, and at such times thereafter as to ensure notice to subscribers. The notification must be effective in informing subscribers how to maintain privacy by dialing *67 (or 1167 for rotary or pulse-dialing phones) on interstate calls. The notice shall inform subscribers whether dialing *82 (or 1182 for rotary or pulse-dialing phones) on interstate calls is necessary to present calling party number to called parties. For ANI or charge number services for which such privacy is not provided, the notification shall inform subscribers of the restrictions on the reuse or sale of subscriber information.

[60 FR 29491, June 5, 1995; 60 FR 54449, Oct. 24, 1995]

§ 64.1604 Effective date.

The provisions of §§ 64.1600 and 64.1602 are effective April 12, 1995. The provisions of §§ 64.1601 and 64.1603 are effective December 1, 1995, except §§ 64.1601 and 64.1603 do not apply to public payphones and partylines until January 1, 1997.

[60 FR 29491, June 5, 1995; 60 FR 54449, Oct. 24, 1995]

Subpart Q—Implementation of Section 273(d)(5) of the Communiations Act: Dispute Resolution Regarding Equipment Standards

SOURCE: 61 FR 24903, May 17, 1996, unless otherwise noted.

§ 64.1700 Purpose and scope.

The purpose of this subpart is to implement the Telecommunications Act of 1996 which amended the Communications Act by creating section 273(d)(5), 47 U.S.C. 273(d)(5). Section 273(d) sets forth procedures to be followed by non-accredited standards development organizations when these organizations set industry-wide standards and generic requirements for telecommunications equipment or customer premises equipment. The statutory procedures allow outside parties to fund and

participate in setting the organization's standards and require the organization and the parties to develop a process for resolving any technical disputes. In cases where all parties cannot agree to a mutually satisfactory dispute resolution process, section 273(d)(5) requires the Commission to prescribe a dispute resolution process.

§ 64.1701 Definitions.

For purposes of this subpart, the terms *accredited standards development organization*, *funding party*, *generic requirement*, and *industry-wide* have the same meaning as found in 47 U.S.C. 273.

§ 64.1702 Procedures.

If a non-accredited standards development organization (NASDO) and the funding parties are unable to agree unanimously on a dispute resolution process prior to publishing a text for comment pursuant to 47 U.S.C. 273(d)(4)(A)(v), a funding party may use the default dispute resolution process set forth in section 64.1703.

§ 64.1703 Dispute resolution default process.

(a) *Tri-Partite Panel.* Technical disputes governed by this section shall be resolved in accordance with the recommendation of a three-person panel, subject to a vote of the funding parties in accordance with paragraph (b) of this section. Persons who participated in the generic requirements or standards development process are eligible to serve on the panel. The panel shall be selected and operate as follows:

(1) Within two (2) days of the filing of a dispute with the NASDO invoking the dispute resolution default process, both the funding party seeking dispute resolution and the NASDO shall select a representative to sit on the panel;

(2) Within four (4) days of their selection, the two panelists shall select a neutral third panel member to create a tri-partite panel;

(3) The tri-partite panel shall, at a minimum, review the proposed text of the NASDO and any explanatory material provided to the funding parties by the NASDO, the comments and any alternative text provided by the funding party seeking dispute resolution, any relevant standards which have been established or which are under development by an accredited-standards development organization, and any comments submitted by other funding parties;

(4) Any party in interest submitting information to the panel for consideration (including the NASDO, the party seeking dispute resolution and the other funding parties) shall be asked by the panel whether there is knowledge of patents, the use of which may be essential to the standard or generic requirement being considered. The fact that the question was asked along with any affirmative responses shall be recorded, and considered, in the panel's recommendation; and

(5) The tri-partite panel shall, within fifteen (15) days after being established, decide by a majority vote, the issue or issues raised by the party seeking dispute resolution and produce a report of their decision to the funding parties. The tri-partite panel must adopt one of the five options listed below:

(i) The NASDO's proposal on the issue under consideration;

(ii) The position of the party seeking dispute resolution on the issue under consideration;

(iii) A standard developed by an accredited standards development organization that addresses the issue under consideration;

(iv) A finding that the issue is not ripe for decision due to insufficient technical evidence to support the soundness of any one proposal over any other proposal; or

(v) Any other resolution that is consistent with the standard described in section 64.1703(a)(6).

(6) The tri-partite panel must choose, from the five options outlined above, the option that they believe provides the most technically sound solution and base its recommendation upon the substantive evidence presented to the panel. The panel is not precluded from taking into account complexity of implementation and other practical considerations in deciding which option is most technically sound. Neither of the disputants (i.e., the NASDO and the funding party which invokes the dispute resolution process) will be permitted to participate in any decision to

reject the mediation panel's recommendation.

(b) The tri-partite panel's recommendation(s) must be included in the final industry-wide standard or industry-wide generic requirement, unless three-fourths of the funding parties who vote decide within thirty (30) days of the filing of the dispute to reject the recommendation and accept one of the options specified in paragraphs (a)(5) (i) through (v) of this section. Each funding party shall have one vote.

(c) All costs sustained by the tri-partite panel will be incorporated into the cost of producing the industry-wide standard or industry-wide generic requirement.

§ 64.1704 Frivolous disputes/penalties.

(a) No person shall willfully refer a dispute to the dispute resolution process under this subpart unless to the best of his knowledge, information and belief there is good ground to support the dispute and the dispute is not interposed for delay.

(b) Any person who fails to comply with the requirements in paragraph (a) of this section, may be subject to forfeiture pursuant to section 503(b) of the Communications Act, 47 U.S.C. 503(b).

Subpart R—Geographic Rate Averaging and Rate Integration

AUTHORITY: 47 U.S.C. §§151, 154(i), 201–205, 214(e), 215 and 254(g).

§ 64.1801 Geographic rate averaging and rate integration.

(a) The rates charged by providers of interexchange telecommunications services to subscribers in rural and high-cost areas shall be no higher than the rates charged by each such provider to its subscribers in urban areas.

(b) A provider of interstate interexchange telecommunications services shall provide such services to its subscribers in each U.S. state at rates no higher than the rates charged to its subscribers in any other state.

[61 FR 42564, Aug. 16, 1996]

APPENDIX A TO PART 64—TELECOMMUNICATIONS SERVICE PRIORITY (TSP) SYSTEM FOR NATIONAL SECURITY EMERGENCY PREPAREDNESS (NSEP)

1. Purpose and Authority

a. This appendix establishes policies and procedures and assigns responsibilities for the National Security Emergency Preparedness (NSEP) Telecommunications Service Priority (TSP) System. The NSEP TSP System authorizes priority treatment to certain domestic telecommunications services (including portions of U.S. international telecommunication services provided by U.S. service vendors) for which provisioning or restoration priority (RP) levels are requested, assigned, and approved in accordance with this appendix.

b. This appendix is issued pursuant to sections 1, 4(i), 201 through 205 and 303(r) of the Communications Act of 1934, as amended, 47 U.S.C. 151, 154(i), 201 through 205 and 303(r). These sections grant to the Federal Communications Commission (FCC) the authority over the assignment and approval of priorities for provisioning and restoration of common carrier-provided telecommunications services. Under section 706 of the Communications Act, this authority may be superseded, and expanded to include non-common carrier telecommunication services, by the war emergency powers of the President of the United States. This appendix provides the Commission's Order to telecommunication service vendors and users to comply with policies and procedures establishing the NSEP TSP System, until such policies and procedures are superseded by the President's war emergency powers. This appendix is intended to be read in conjunction with regulations and procedures that the Executive Office of the President issues (1) to implement responsibilities assigned in section 6(b) of this appendix, or (2) for use in the event this appendix is superseded by the President's war emergency powers.

c. Together, this appendix and the regulations and procedures issued by the Executive Office of the President establish one uniform system of priorities for provisioning and restoration of NSEP telecommunication services both before and after invocation of the President's war emergency powers. In order that government and industry resources may be used effectively under all conditions, a single set of rules, regulations, and procedures is necessary, and they must be applied on a day-to-day basis to all NSEP services so that the priorities they establish can be implemented at once when the need arises.

*In sections 2(a)(2) and 2(b)(2) of Executive Order No. 12472, ''Assignment of National Security and Emergency Preparedness Telecommunications Functions'' April 3, 1984 (49 FR 13471 (1984)), the President assigned to

the Director, Office of Science and Technology Policy, certain NSEP telecommunication resource management responsibilities. The term ''Executive Office of the President'' as used in this appendix refers to the official or organization designated by the President to act on his behalf.

2. Applicability and Revocation

a. This appendix applies to NSEP telecommunications services:

(1) For which initial or revised priority level assignments are requested pursuant to section 8 of this appendix.

(2) Which were assigned restoration priorities under the provision of FCC Order 80–581; 81 FCC 2d 441 (1980); 47 CFR part 64, appendix A, ''Priority System for the Restoration of Common Carrier Provided Intercity Private Line Services''; and are being resubmitted for priority level assignments pursuant to section 10 of this appendix. (Such services will retain assigned restoration priorities until a resubmission for a TSP assignment is completed or until the existing RP rules are terminated.)

b. FCC Order 80–581 will continue to apply to all other intercity, private line circuits assigned restoration priorities thereunder until the fully operating capability date of this appendix, 30 months after the initial operating capability date referred to in subsection d of this section.

c. In addition, FCC Order, ''Precedence System for Public Correspondence Services Provided by the Communications Common Carriers'' (34 FR 17292 (1969)); (47 CFR part 64, appendix B), is revoked as of the effective date of this appendix.

d. The initial operating capability (IOC) date for NSEP TSP will be nine months after release in the FEDERAL REGISTER of the FCC's order following review of procedures submitted by the Executive Office of the President. On this IOC date requests for priority assignments generally will be accepted only by the Executive Office of the President.

3. Definitions

As used in this part:

a. *Assignment* means the designation of priority level(s) for a defined NSEP telecommunications service for a specified time period.

b. *Audit* means a quality assurance review in response to identified problems.

c. *Government* refers to the Federal government or any foreign, state, county, municipal or other local government agency or organization. Specific qualifications will be supplied whenever reference to a particular level of government is intended (e.g., ''Federal government'', ''state government''). ''Foreign government'' means any sovereign empire, kingdom, state, or independent political community, including foreign diplomatic and consular establishments and coalitions or associations of governments (e.g., North Atlantic Treaty Organization (NATO), Southeast Asian Treaty Organization (SEATO), Organization of American States (OAS), and government agencies or organization (e.g., Pan American Union, International Postal Union, and International Monetary Fund)).

d. *National Communications System (NCS)* refers to that organization established by the President in Executive Order No. 12472, ''Assignment of National Security and Emergency Preparedness Telecommunications Functions,'' April 3, 1984, 49 FR 13471 (1984).

e. *National Coordinating Center (NCC)* refers to the joint telecommunications industry-Federal government operation established by the National Communications System to assist in the initiation, coordination, restoration, and reconstitution of NSEP telecommunication services or facilities.

f. *National Security Emergency Preparedness (NSEP)* telecommunications services, or ''NSEP services,'' means telecommunication services which are used to maintain a state of readiness or to respond to and manage any event or crisis (local, national, or international), which causes or could cause injury or harm to the population, damage to or loss of property, or degrades or threatens the NSEP posture of the United States. These services fall into two specific categories, Emergency NSEP and Essential NSEP, and are assigned priority levels pursuant to section 9 of this appendix.

g. *NSEP treatment* refers to the provisioning of a telecommunication service before others based on the provisioning priority level assigned by the Executive Office of the President.

h. *Priority action* means assignment, revision, revocation, or revalidation by the Executive Office of the President of a priority level associated with an NSEP telecommunications service.

i. *Priority level* means the level that may be assigned to an NSEP telecommunications service specifying the order in which provisioning or restoration of the service is to occur relative to other NSEP and/or non-NSEP telecommunication services. Priority levels authorized by this appendix are designated (highest to lowest) ''E,'' ''1,'' ''2,'' ''3,'' ''4,'' and ''5,'' for provisioning and ''1,'' ''2,'' ''3,'' ''4,'' and ''5,'' for restoration.

j. *Priority level assignment* means the priority level(s) designated for the provisioning and/or restoration of a particular NSEP telecommunications service under section 9 of this appendix.

k. *Private NSEP telecommunications services* include non-common carrier telecommunications services including private line, virtual private line, and private switched network services.

l. *Provisioning* means the act of supplying telecommunications service to a user, including all associated transmission, wiring and equipment. As used herein, ''provisioning'' and ''initiation'' are synonymous and include altering the state of an existing priority service or capability.

m. *Public switched NSEP telecommunications services* include those NSEP telecommunications services utilizing public switched networks. Such services may include both interexchange and intraexchange network facilities (e.g., switching systems, interoffice trunks and subscriber loops).

n. *Reconciliation* means the comparison of NSEP service information and the resolution of identified discrepancies.

o. *Restoration* means the repair or returning to service of one or more telecommunication services that have experienced a service outage or are unusable for any reason, including a damaged or impaired telecommunications facility. Such repair or returning to service may be done by patching, rerouting, substitution of component parts or pathways, and other means, as determined necessary by a service vendor.

p. *Revalidation* means the rejustification by a service user of a priority level assignment. This may result in extension by the Executive Office of the President of the expiration date associated with the priority level assignment.

q. *Revision* means the change of priority level assignment for an NSEP telecommunications service. This includes any extension of an existing priority level assignment to an expanded NSEP service.

r. *Revocation* means the elimination of a priority level assignment when it is no longer valid. All priority level assignments for an NSEP service are revoked upon service termination.

s. *Service identification* refers to the information uniquely identifying an NSEP telecommunications service to the service vendor and/or service user.

t. *Service user* refers to any individual or organization (including a service vendor) supported by a telecommunications service for which a priority level has been requested or assigned pursuant to section 8 or 9 of this appendix.

u. *Service vendor* refers to any person, association, partnership, corporation, organization, or other entity (including common carriers and government organizations) that offers to supply any telecommunications equipment, facilities, or services (including customer premises equipment and wiring) or combination thereof. The term includes resale carriers, prime contractors, subcontractors, and interconnecting carriers.

v. *Spare circuits or services* refers to those not being used or contracted for by any customer.

w. *Telecommunication services* means the transmission, emission, or reception of signals, signs, writing, images, sounds, or intelligence of any nature, by wire, cable, satellite, fiber optics, laser, radio, visual or other electronic, electric, electromagnetic, or acoustically coupled means, or any combination thereof. The term can include necessary telecommunication facilities.

x. *Telecommunications Service Priority (TSP) system user* refers to any individual, organization, or activity that interacts with the NSEP TSP System.

4. Scope

a. *Domestic NSEP services.* The NSEP TSP System and procedures established by this appendix authorize priority treatment to the following domestic telecommunication services (including portions of U.S. international telecommunication services provided by U.S. vendors) for which provisioning or restoration priority levels are requested, assigned, and approved in accordance with this appendix:

(1) Common carrier services which are:

(a) Interstate or foreign telecommunications services,

(b) Intrastate telecommunication services inseparable from interstate or foreign telecommunications services, and instrastate telecommunication services to which priority levels are assigned pursuant to section 9 of this appendix.

NOTE: Initially, the NSEP TSP System's applicability to public switched services is limited to (a) provisioning of such services (e.g., business, centrex, cellular, foreign exchange, Wide Area Telephone Service (WATS) and other services that the selected vendor is able to provision) and (b) restoration of services that the selected vendor is able to restore.

(2) Services which are provided by government and/or non-common carriers and are interconnected to common carrier services assigned a priority level pursuant to section 9 of this appendix.

b. *Control services and orderwires.* The NSEP TSP System and procedures established by this appendix are not applicable to authorize priority treatment to control services or orderwires owned by a service vendor and needed for provisioning, restoration, or maintenance of other services owned by that service vendor. Such control services and orderwires shall have priority provisioning and restoration over all other telecommunication services (including NSEP services) and shall be exempt from preemption. However, the NSEP TSP System and procedures established by this appendix are applicable to control services or orderwires leased by a service vendor.

c. *Other services.* The NSEP TSP System may apply, at the discretion of and upon special arrangements by the NSEP TSP System users involved, to authorize priority treatment to the following telecommunication services:

(1) Government or non-common carrier services which are not connected to common carrier provided services assigned a priority level pursuant to section 9 of this appendix.

(2) Portions of U.S. international services which are provided by foreign correspondents. (U.S. telecommunication service vendors are encouraged to ensure that relevant operating arrangements are consistent to the maximum extent practicable with the NSEP TSP System. If such arrangements do not exist, U.S. telecommunication service vendors should handle service provisioning and/or restoration in accordance with any system acceptable to their foreign correspondents which comes closest to meeting the procedures established in this appendix.)

5. Policy

The NSEP TSP System is the regulatory, administrative, and operational system authorizing and providing for priority treatment, *i.e.,* provisioning and restoration, of NSEP telecommunication services. As such, it establishes the framework for telecommunication service vendors to provision, restore, or otherwise act on a priority basis to ensure effective NSEP telecommunication services. The NSEP TSP System allows the assignment of priority levels to any NSEP service across three time periods, or stress conditions: Peacetime/Crisis/Mobilizations, Attack/War, and Post-Attack/Recovery. Although priority levels normally will be assigned by the Executive Office of the President and retained by service vendors only for the current time period, they may be preassigned for the other two time periods at the request of service users who are able to identify and justify in advance, their wartime or post-attack NSEP telecommunication requirements. Absent such preassigned priority levels for the Attack/War and Post-Attack/Recovery periods, priority level assignments for the Peacetime/Crisis/Mobilization period will remain in effect. At all times, priority level assignments will be subject to revision by the FCC or (on an interim basis) the Executive Office of the President, based upon changing NSEP needs. No other system of telecommunication service priorities which conflicts with the NSEP TSP System is authorized.

6. Responsibilities

a. The FCC will:

(1) Provide regulatory oversight of implementation of the NSEP TSP System.

(2) Enforce NSEP TSP System rules and regulations, which are contained in this appendix.

(3) Act as final authority for approval, revision, or disapproval of priority actions by the Executive Office of the President and adjudicate disputes regarding either priority actions or denials of requests for priority actions by the Executive Office of the President, until superseded by the President's war emergency powers under section 706 of the Communications Act.

(4) Function (on a discretionary basis) as a sponsoring Federal organization. (See section 6(c) below.)

b. The Executive Office of the President will:

(1) During exercise of the President's war emergency powers under section 706 of the Communications Act, act as the final approval authority for priority actions or denials of requests for priority actions, adjudicating any disputes.

(2) Until the exercise of the President's war emergency powers, administer the NSEP TSP System which includes:

(a) Receiving, processing, and evaluating requests for priority actions from service users, or sponsoring Federal government organizations on behalf of service users (e.g., Department of State or Defense on behalf of foreign governments, Federal Emergency Management Agency on behalf of state and local governments, and any Federal organization on behalf of private industry entities). Action on such requests will be completed within 30 days of receipt.

(b) Assigning, revising, revalidating, or revoking priority levels as necessary or upon request of service users concerned, and denying requests for priority actions as necessary, using the categories and criteria specified in section 12 of this appendix. Action on such requests will be completed within 30 days of receipt.

(c) Maintaining data on priority level assignments.

(d) Periodically forwarding to the FCC lists of priority actions by the Executive Office of the President for review and approval.

(e) Periodically initiating reconciliation.

(f) Testing and evaluating the NSEP TSP System for effectiveness.

(g) Conducting audits as necessary. Any Telecommunications Service Priority (TSP) System user may request the Executive Office of the President to conduct an audit.

(h) Issuing, subject to review by the FCC, regulations and procedures supplemental to and consistent with this appendix regarding operation and use of the NSEP TSP System.

(i) Serving as a centralized point-of-contact for collecting and disseminating to all interested parties (consistent with requirements for treatment of classified and proprietary material) information concerning use and abuse of the NSEP TSP System.

(j) Establishing and assisting a TSP System Oversight Committee to identify and review any problems developing in the system and recommend actions to correct them or prevent recurrence. In addition to representatives of the Executive Office of the President, representatives from private industry (including telecommunication service vendors), state and local governments, the FCC, and other organizations may be appointed to that Committee.

(k) Reporting at least quarterly to the FCC and TSP System Oversight Committee, together with any recommendations for action, the operational status of and trends in the NSEP TSP System, including:

(i) Numbers of requests processed for the various priority actions, and the priority levels assigned.

(ii) Relative percentages of services assigned to each priority level under each NSEP category and subcategory.

(iii) Any apparent serious misassignment or abuse of priority level assignments.

(iv) Any existing or developing problem.

(l) Submitting semi-annually to the FCC and TSP System Oversight Committee a summary report identifying the time and event associated with each invocation of NSEP treatment under section 9(c) of this appendix, whether the NSEP service requirement was adequately handled, and whether any additional charges were incurred. These reports will be due by April 30th for the preceding July through December and by October 31 for the preceding January through June time periods.

(m) All reports submitted to the FCC should be directed to Chief, Domestic Services Branch, Common Carrier Bureau, Washington, DC 20554.

(3) Function (on a discretionary basis) as a sponsoring Federal organization. (See section 6(c) below.)

c. Sponsoring Federal organizations will:

(1) Review and decide whether to sponsor foreign, state, and local government and private industry (including telecommunication service vendors) requests for priority actions. Federal organizations will forward sponsored requests with recommendations for disposition to the Executive Office of the President. Recommendations will be based on the categories and criteria in section 12 of this appendix.

(2) Forward notification of priority actions or denials of requests for priority actions from the Executive Office of the President to the requesting foreign, state, and local government and private industry entities.

(3) Cooperate with the Executive Office of the President during reconciliation, revalidation, and audits.

(4) Comply with any regulations and procedures supplemental to and consistent with this appendix which are issued by the Executive Office of the President.

d. Service users will:

(1) Identify services requiring priority level assignments and request and justify priority level assignments in accordance with this appendix and any supplemental regulations and procedures issued by the Executive Office of the President that are consistent with this appendix.

(2) Request and justify revalidation of all priority level assignments at least every three years.

(3) For services assigned priority levels, ensure (through contractual means or otherwise) availability of customer premises equipment and wiring necessary for end-to-end service operation by the service due date, and continued operation; and, for such services in the Emergency NSEP category, by the time that vendors are prepared to provide the services. Additionally, designate the organization responsible for the service on an end-to-end basis.

(4) Be prepared to accept services assigned priority levels by the service due dates or, for services in the Emergency NSEP category, when they are available.

(5) Pay vendors any authorized costs associated with services that are assigned priority levels.

(6) Report to vendors any failed or unusable services that are assigned priority levels.

(7) Designate a 24-hour point-of-contact for matters concerning each request for priority action and apprise the Executive Office of the President thereof.

(8) Upon termination of services that are assigned priority levels, or circumstances warranting revisions in priority level assignment (e.g., expansion of service), request and justify revocation or revision.

(9) When NSEP treatment is invoked under section 9(c) of this appendix, within 90 days following provisioning of the service involved, forward to the National Coordinating Center (see section 3(e) of this appendix) complete information identifying the time and event associated with the invocation and regarding whether the NSEP service requirement was adequately handled and whether any additional charges were incurred.

(10) Cooperate with the Executive Office of the President during reconciliation, revalidation, and audits.

(11) Comply with any regulations and procedures supplemental to and consistent with this appendix that are issued by the Executive Office of the President.

e. Non-federal service users, in addition to responsibilities prescribed above in section 6(d), will obtain a sponsoring Federal organization for all requests for priority actions. If unable to find a sponsoring Federal organization, a non-federal service user may submit its request, which must include documentation of attempts made to obtain a sponsor

and reasons given by the sponsor for its refusal, directly to the Executive Office of the President.

f. Service vendors will:

(1) When NSEP treatment is invoked by service users, provision NSEP telecommunication services before non-NSEP services, based on priority level assignments made by the Executive Office of the President. Provisioning will require service vendors to:

(a) Allocate resources to ensure best efforts to provide NSEP services by the time required. When limited resources constrain response capability, vendors will address conflicts for resources by:

(i) Providing NSEP services in order of provisioning priority level assignment (i.e., ''E'', ''1'', ''2'', ''3'', ''4'', or ''5'');

(ii) Providing Emergency NSEP services (i.e., those assigned provisioning priority level ''E'') in order of receipt of the service requests;

(iii) Providing Essential NSEP services (i.e., those assigned priority levels ''1'', ''2'', ''3'', ''4'', or ''5'') that have the same provisioning priority level in order of service due dates; and

(iv) Referring any conflicts which cannot be resolved (to the mutual satisfaction of servicer vendors and users) to the Executive Office of the President for resolution.

(b) Comply with NSEP service requests by:

(i) Allocating resources necessary to provide Emergency NSEP services as soon as possible, dispatching outside normal business hours when necessary;

(ii) Ensuring best efforts to meet requested service dates for Essential NSEP services, negotiating a mutually (customer and vendor) acceptable service due date when the requested service due date cannot be met; and

(iii) Seeking National Coordinating Center (NCC) assistance as authorized under the NCC Charter (see section 1.3, NCC Charter, dated October 9, 1985).

(2) Restore NSEP telecommunications services which suffer outage, or are reported as unusable or otherwise in need of restoration, before non-NSEP services, based on restoration priority level assignments. (NOTE: For broadband or multiple service facilities, restoration is permitted even though it might result in restoration of services assigned no or lower priority levels along with, or sometimes ahead of, some higher priority level services.) Restoration will require service vendors to restore NSEP services in order of restoration priority level assignment (i.e., ''1'', ''2'', ''3'', ''4'', or ''5'') by:

(a) Allocating available resources to restore NSEP services as quickly as practicable, dispatching outside normal business hours to restore services assigned priority levels ''1'', ''2'', and ''3'' when necessary, and services assigned priority level ''4'' and ''5'' when the next business day is more than 24 hours away;

(b) Restoring NSEP services assigned the same restoration priority level based upon which can be first restored. (However, restoration actions in progress should not normally be interrupted to restore another NSEP service assigned the same restoration priority level);

(c) Patching and/or rerouting NSEP services assigned restoration priority levels from ''1'' through ''5,'' when use of patching and/or rerouting will hasten restoration;

(d) Seeking National Coordinating Center (NCC) assistance authorized under the NCC Charter; and

(e) Referring any conflicts which cannot be resolved (to the mutual satisfaction of service vendors and users) to the Executive Office of the President for resolution.

(3) Respond to provisioning requests of customers and/or other service vendors, and to restoration priority level assignments when an NSEP service suffers an outage or is reported as unusable, by:

(a) Ensuring that vendor personnel understand their responsibilities to handle NSEP provisioning requests and to restore NSEP service; and

(b) Providing a 24-hour point-of-contact for receiving provisioning requests for Emergency NSEP services and reports of NSEP service outages or unusability.

(c) Seek verification from an authorized entity if legitimacy of a priority level assignment or provisioning request for an NSEP service is in doubt. However, processing of Emergency NSEP service requests will not be delayed for verification purposes.

(4) Cooperate with other service vendors involved in provisioning or restoring a portion of an NSEP service by honoring provisioning or restoration priority level assignments, or requests for assistance to provision or restore NSEP services, as detailed in sections 6(f)(1), (2), and (3) above.

(5) All service vendors, including resale carriers, are required to ensure that service vendors supplying underlying facilities are provided information necessary to implement priority treatment of facilities that support NSEP services.

(6) Preempt, when necessary, existing services to provide an NSEP service as authorized in section 7 of this appendix.

(7) Assist in ensuring that priority level assignments of NSEP services are accurately identified ''end-to-end'' by:

(a) Seeking verification from an authorized Federal government entity if the legitimacy of the restoration priority level assignment is in doubt;

(b) Providing to subcontractors and/or interconnecting carriers the restoration priority level assigned to a service;

(c) Supplying, to the Executive Office of the President, when acting as a prime contractor to a service user, confirmation information regarding NSEP service completion

for that portion of the service they have contracted to supply;

(d) Supplying, to the Executive Office of the President, NSEP service information for the purpose of reconciliation.

(e) Cooperating with the Executive Office of the President during reconciliation.

(f) Periodically initiating reconciliation with their subcontractors and arranging for subsequent subcontractors to cooperate in the reconciliation process.

(8) Receive compensation for costs authorized through tariffs or contracts by:

(a) Provisions contained in properly filed state or Federal tariffs; or

(b) Provisions of properly negotiated contracts where the carrier is not required to file tariffs.

(9) Provision or restore only the portions of services for which they have agreed to be responsible (i.e., have contracted to supply), unless the President's war emergency powers under section 706 of the Communications Act are in effect.

(10) Cooperate withe the Executive Office of the President during audits.

(11) Comply with any regulations or procedures supplemental to and consistent with this appendix that are issued by the Executive Office of the President and reviewed by the FCC.

(12) Insure that at all times a reasonable number of public switched network services are made available for public use.

(13) Not disclose information concerning NSEP services they provide to those not having a need-to-know or might use the information for competitive advantage.

7. Preemption of Existing Services

When necessary to provision or restore NSEP services, service vendors may preempt services they provide as specified below. ''User'' as used in this Section means any user of a telecommunications service, including both NSEP and non-NSEP services. Prior consent by a preempted user is not required.

a. The sequence in which existing services may be preempted to provision NSEP services assigned a provisioning priority level ''E'' or restore NSEP services assigned a restoration priority level from ''1'' through ''5'':

(1) Non-NSEP services: If suitable spare services are not available, then, based on the considerations in this appendix and the service vendor's best judgment, non-NSEP services will be preempted. After ensuring a sufficient number of public switched services are available for public use, based on the service vendor's best judgment, such services may be used to satisfy a requirement for provisioning or restoring NSEP services.

(2) NSEP services: If no suitable spare or non-NSEP services are available, then existing NSEP services may be preempted to provision or restore NSEP services with higher priority level assignments. When this is necessary, NSEP services will be selected for preemption in the inverse order of priority level assignment.

(3) Service vendors who are preempting services will ensure their best effort to notify the service user of the preempted service and state the reason for and estimated duration of the preemption.

b. Service vendors may, based on their best judgment, determine the sequence in which existing services may be preempted to provision NSEP services assigned a provisioning priority of ''1'' through ''5''. Preemption is not subject to the consent of the user whose service will be preempted.

8. Requests for Priority Assignments.

All service users are required to submit requests for priority actions through the Executive Office of the President in the format and following the procedures prescribed by that Office.

9. Assignment, Approval, Use, and Invocation of Priority Levels

a. *Assignment and approval of priority levels.* Priority level assignments will be based upon the categories and criteria specified in section 12 of this appendix. A priority level assignment made by the Executive Office of the President will serve as that Office's recommendation to the FCC. Until the President's war emergency powers are invoked, priority level assignments must be approved by the FCC. However, service vendors are ordered to implement any priority level assignments that are pending FCC approval.

After invocation of the President's war emergency powers, these requirements may be superseded by other procedures issued by the Executive Office of the President.

b. *Use of Priority Level Assignments.*

(1) All provisioning and restoration priority level assignments for services in the Emergency NSEP category will be included in initial service orders to vendors. Provisioning priority level assignments for Essential NSEP services, however, will not usually be included in initial service orders to vendors. NSEP treatment for Essential NSEP services will be invoked and provisioning priority level assignments will be conveyed to service vendors only if the vendors cannot meet needed service dates through the normal provisioning process.

(2) Any revision or revocation of either provisioning or restoration priority level assignments will also be transmitted to vendors.

(3) Service vendors shall accept priority levels and/or revisions only after assignment by the Executive Office of the President.

NOTE: Service vendors acting as prime contractors will accept assigned NSEP priority levels only when they are accompanied by

the Executive Office of the President designated service identification, *i.e.*, TSP Authorization Code. However, service vendors are authorized to accept priority levels and/or revisions from users and contracting activities before assignment by the Executive Office of the President when service vendor, user, and contracting activities are unable to communicate with either the Executive Office of the President or the FCC. Processing of Emergency NSEP service requests will not be delayed for verification purposes.

c. *Invocation of NSEP treatment.* To invoke NSEP treatment for the priority provisioning of an NSEP telecommunications service, an authorized Federal official either within, or acting on behalf of, the service user's organization must make a written or oral declaration to concerned service vendor(s) and the Executive Office of the President that NSEP treatment is being invoked. Authorized Federal officials include the head or director of a Federal agency, commander of a unified/specified military command, chief of a military service, or commander of a major military command; the delegates of any of the foregoing; or any other officials as specified in supplemental regulations or procedures issued by the Executive Office of the President. The authority to invoke NSEP treatment may be delegated only to a general or flag officer of a military service, civilian employee of equivalent grade (e.g., Senior Executive Service member), Federal Coordinating Officer or Federal Emergency Communications Coordinator/Manager, or any other such officials specified in supplemental regulations or procedures issued by the Executive Office of the President. Delegates must be designated as such in writing, and written or oral invocations must be accomplished, in accordance with supplemental regulations or procedures issued by the Executive Office of the President.

10. Resubmission of Circuits Presently Assigned Restoration Priorities

All circuits assigned restoration priorities must be reviewed for eligibility for initial restoration priority level assignment under the provisions of this appendix. Circuits currently assigned restoration priorities, and for which restoration priority level assignments are requested under section 8 of this appendix, will be resubmitted to the Executive Office of the President. To resubmit such circuits, service users will comply with applicable provisions of section 6(d) of this appendix.

11. Appeal

Service users or sponsoring Federal organizations may appeal any priority level assignment, denial, revision, revocation, approval, or disapproval to the Executive Office of the President within 30 days of notification to the service user. The appellant must use the form or format required by the Executive Office of the President and must serve the FCC with a copy of its appeal. The Executive Office of the President will act on the appeal within 90 days of receipt. Service users and sponsoring Federal organizations may only then appeal directly to the FCC. Such FCC appeal must be filed within 30 days of notification of the Executive Office of the President's decision on appeal. Additionally, the Executive Office of the President may appeal any FCC revisions, approvals, or disapprovals to the FCC. All appeals to the FCC must be submitted using the form or format required. The party filing its appeal with the FCC must include factual details supporting its claim and must serve a copy on the Executive Office of the President and any other party directly involved. Such party may file a response within 20 days, and replies may be filed within 10 days thereafter. The Commission will not issue public notices of such submissions. The Commission will provide notice of its decision to the parties of record. Any appeals to the Executive Office of the President that include a claim of new information that has not been presented before for consideration may be submitted at any time.

12. NSEP TSP System Categories, Criteria, and Priority Levels

a. *General.* NSEP TSP System categories and criteria, and permissible priority level assignments, are defined and explained below.

(1) The Essential NSEP category has four subcategories: National Security Leadership; National Security Posture and U.S. Population Attack Warning; Public Health, Safety, and Maintenance of Law and Order; and Public Welfare and Maintenance of National Economic Posture. Each subcategory has its own criteria. Criteria are also shown for the Emergency NSEP category, which has no sub-categories.

(2) Priority levels of ''1,'' ''2,'' ''3,'' ''4,'' and ''5'' may be assigned for provisioning and/or restoration of Essential NSEP telecommunication services. However, for Emergency NSEP telecommunications services, a priority level ''E'' is assigned for provisioning. A restoration priority level from ''1'' through ''5'' may be assigned if an Emergency NSEP service also qualifies for such a restoration priority level under the Essential NSEP category.

(3) The NSEP TSP System allows the assignment of priority levels to any NSEP telecommunications service across three time periods, or stress conditions: Peacetime/Crisis/Mobilization, Attack/War, and Post-Attack/Recovery. Priority levels will normally be assigned only for the first time period. These assigned priority levels will apply through the onset of any attack, but it

is expected that they would later be revised by surviving authorized telecommunication resource managers within the Executive Office of the President based upon specific facts and circumstances arising during the Attack/War and Post-Attack/Recovery time periods.

(4) Service users may, for their own internal use, assign subpriorities to their services assigned priority levels. Receipt of and response to any such subpriorities is optional for service vendors.

(5) The following paragraphs provide a detailed explanation of the categories, subcategories, criteria, and priority level assignments, beginning with the Emergency NSEP category.

b. *Emergency NSEP.* Telecommunications services in the Emergency NSEP category are those new services so critical as to be required to be provisioned at the earliest possible time, without regard to the costs of obtaining them.

(1) *Criteria.* To qualify under the Emergency NSEP category, the service must meet criteria directly supporting or resulting from at least one of the following NSEP functions:

(a) Federal government activity responding to a Presidentially declared disaster or emergency as defined in the Disaster Relief Act (42 U.S.C. 5122).

(b) State or local government activity responding to a Presidentially declared disaster or emergency.

(c) Response to a state of crisis declared by the National Command Authorities (e.g., exercise of Presidential war emergency powers under section 706 of the Communications Act.)

(d) Efforts to protect endangered U.S. personnel or property.

(e) Response to an enemy or terrorist action, civil disturbance, natural disaster, or any other unpredictable occurrence that has damaged facilities whose uninterrupted operation is critical to NSEP or the management of other ongoing crises.

(f) Certification by the head or director of a Federal agency, commander of a unified/specified command, chief of a military service, or commander of a major military command, that the telecommunications service is so critical to protection of life and property or to NSEP that it must be provided immediately.

(g) A request from an official authorized pursuant to the Foreign Intelligence Surveillance Act (50 U.S.C. 1801 *et seq.* and 18 U.S.C. 2511, 2518, 2519).

(2) *Priority Level Assignment.*

(a) Services qualifying under the Emergency NSEP category are assigned priority level ''E'' for provisioning.

(b) After 30 days, assignments of provisioning priority level ''E'' for Emergency NSEP services are automatically revoked unless extended for another 30-day period. A notice of any such revocation will be sent to service vendors.

(c) For restoration, Emergency NSEP services may be assigned priority levels under the provisions applicable to Essential NSEP services (see section 12(c)). Emergency NSEP services not otherwise qualifying for restoration priority level assignment as Essential NSEP may be assigned a restoration priority level ''5'' for a 30-day period. Such 30-day restoration priority level assignments will be revoked automatically unless extended for another 30-day period. A notice of any such revocation will be sent to service vendors.

c. *Essential NSEP.* Telecommunication services in the Essential NSEP category are those required to be provisioned by due dates specified by service users, or restored promptly, normally without regard to associated overtime or expediting costs. They may be assigned priority level of ''1,'' ''2,'' ''3,'' ''4,'' or ''5'' for both provisioning and restoration, depending upon the nature and urgency of the supported function, the impact of lack of service or of service interruption upon the supported function, and, for priority access to public switched services, the user's level of responsibility. Priority level assignments will be valid for no more than three years unless revalidated. To be categorized as Essential NSEP, a telecommunications service must qualify under one of the four following subcategories: National Security Leadership; National Security Posture and U.S. Population Attack Warning; Public Health, Safety and Maintenance of Law and Order; or Public Welfare and Maintenance of National Economic Posture. (NOTE.—Under emergency circumstances, Essential NSEP telecommunication services may be recategorized as Emergency NSEP and assigned a priority level ''E'' for provisioning.)

(1) *National security leadership.* This subcategory will be strictly limited to only those telecommunication services essential to national survival if nuclear attack threatens or occurs, and critical orderwire and control services necessary to ensure the rapid and efficient provisioning or restoration of other NSEP telecommunication services. Services in this subcategory are those for which a service interruption of even a few minutes would have serious adverse impact upon the supported NSEP function.

(a) *Criteria.* To qualify under this subcategory, a service must be at least one of the following:

(i) Critical orderwire, or control service, supporting other NSEP functions.

(ii) Presidential communications service critical to continuity of government and national leadership during crisis situations.

(iii) National Command Authority communications service for military command and control critical to national survival.

(iv) Intelligence communications service critical to warning of potentially catastrophic attack.

(v) Communications service supporting the conduct of diplomatic negotiations critical to arresting or limiting hostilities.

(b) *Priority level assignment.* Services under this subcategory will normally be assigned priority level ''1'' for provisioning and restoration during the Peace/Crisis/Mobilization time period.

(2) *National security posture and U.S. population attack warning.* This subcategory covers those minimum additional telecommunication services essential to maintaining an optimum defense, diplomatic, or continuity-of-government postures before, during, and after crises situations. Such situations are those ranging from national emergencies to international crises, including nuclear attack. Services in this subcategory are those for which a service interruption ranging from a few minutes to one day would have serious adverse impact upon the supported NSEP function.

(a) *Criteria.* To qualify under this subcategory, a service must support at least one of the following NSEP functions:

(i) Threat assessment and attack warning.

(ii) Conduct of diplomacy.

(iii) Collection, processing, and dissemination of intelligence.

(iv) Command and control of military forces.

(v) Military mobilization.

(vi) Continuity of Federal government before, during, and after crises situations.

(vii) Continuity of state and local government functions supporting the Federal government during and after national emergencies.

(viii) Recovery of critical national functions after crises situations.

(ix) National space operations.

(b) *Priority level assignment.* Services under this subcategory will normally be assigned priority level ''2,'' ''3,'' ''4,'' or ''5'' for provisioning and restoration during Peacetime/Crisis/Mobilization.

(3) *Public health, safety, and maintenance of law and order.* This subcategory covers the minimum number of telecommunication services necessary for giving civil alert to the U.S. population and maintaining law and order and the health and safety of the U.S. population in times of any national, regional, or serious local emergency. These services are those for which a service interruption ranging from a few minutes to one day would have serious adverse impact upon the supported NSEP functions.

(a) *Criteria.* To qualify under this subcategory, a service must support at least one of the following NSEP functions:

(i) Population warning (other than attack warning).

(ii) Law enforcement.

(iii) Continuity of critical state and local government functions (other than support of the Federal government during and after national emergencies).

(vi) Hospitals and distributions of medical supplies.

(v) Critical logistic functions and public utility services.

(vi) Civil air traffic control.

(vii) Military assistance to civil authorities.

(viii) Defense and protection of critical industrial facilities.

(ix) Critical weather services.

(x) Transportation to accomplish the foregoing NSEP functions.

(b) *Priority level assignment.* Service under this subcategory will normally be assigned priority levels ''3,'' ''4,'' or ''5'' for provisioning and restoration during Peacetime/Crisis/Mobilization.

(4) *Public welfare and maintenance of national economic posture.* This subcategory covers the minimum number of telecommunications services necessary for maintaining the public welfare and national economic posture during any national or regional emergency. These services are those for which a service interruption ranging from a few minutes to one day would have serious adverse impact upon the supported NSEP function.

(a) *Criteria.* To qualify under this subcategory, a service must support at least one of the following NSEP functions:

(i) Distribution of food and other essential supplies.

(ii) Maintenance of national monetary, credit, and financial systems.

(iii) Maintenance of price, wage, rent, and salary stabilization, and consumer rationing programs.

(iv) Control of production and distribution of strategic materials and energy supplies.

(v) Prevention and control of environmental hazards or damage.

(vi) Transportation to accomplish the foregoing NSEP functions.

(b) *Priority level assignment.* Services under this subcategory will normally be assigned priority levels ''4'' or ''5'' for provisioning and restoration during Peacetime/Crisis/Mobilization.

d. *Limitations.* Priority levels will be assigned only to the minimum number of telecommunication services required to support an NSEP function. Priority levels will not normally be assigned to backup services on a continuing basis, absent additional justification, *e.g.*, a service user specifies a requirement for physically diverse routing or contracts for additional continuity-of-service features. The Executive Office of the President may also establish limitations upon the relative numbers of services which may be assigned any restoration priority level. These limitations will not take precedence

over laws or executive orders. Such limitations shall not be exceeded absent waiver by the Executive Office of the President.

e. *Non-NSEP services.* Telecommunication services in the non-NSEP category will be those which do not meet the criteria for either Emergency NSEP or Essential NSEP.

[53 FR 47536, Nov. 23, 1988; 54 FR 152, Jan. 4, 1989; 54 FR 1471, Jan. 13, 1989]

PART 65—INTERSTATE RATE OF RETURN PRESCRIPTION PROCEDURES AND METHODOLOGIES

Subpart A—General

Sec.
65.1 Application of part 65.

Subpart B—Procedures

65.100 Participation and acceptance of service designation.
65.101 Initiation of unitary rate of return prescription proceedings.
65.102 Petitions for exclusion from unitary treatment and for individual treatment in determining authorized return for interstate exchange access service.
65.103 Procedures for filing rate of return submissions.
65.104 Page limitations for rate of return submissions.
65.105 Discovery.

Subpart C—Exchange Carriers

65.300 Calculations of the components and weights of the cost of capital.
65.301 Cost of equity.
65.302 Cost of debt.
65.303 Cost of preferred stock.
65.304 Capital structure.
65.305 Calculation of the weighted average cost of capital.
65.306 Calculation accuracy.
65.450 Net income.

Subpart D—Interexchange Carriers

65.500 Net income.

Subpart E—Rate of Return Reports

65.600 Rate of return reports.

Subpart F—Maximum Allowable Rates of Return

65.700 Determining the maximum allowable rate of return.
65.701 Period of review.
65.702 Measurement of interstate service earnings.

Subpart G—Rate Base

65.800 Rate base.
65.810 Definitions.
65.820 Included items.
65.830 Deducted items.

AUTHORITY: Secs. 4, 201, 202, 203, 205, 218, 403, 48 Stat., 1066, 1072, 1077, 1094, as amended, 47 U.S.C. 151, 154, 201, 202, 203, 204, 205, 218, 219, 220, 403.

Subpart A—General

§ 65.1 Application of part 65.

(a) This part establishes procedures and methodologies for Commission prescription of an authorized unitary interstate exchange access rate of return and individual rates of return for the interstate exchange access rates of certain carriers pursuant to § 65.102. This part shall apply to those interstate services of local exchange carriers as the Commission shall designate by rule or order, except that all local exchange carriers shall provide to the Commission that information which the Commission requests for purposes of conducting prescription proceedings pursuant to this part.

(b) Local exchange carriers subject to §§ 61.41 through 61.49 of this chapter are exempt from the requirements of this part with the following exceptions:

(1) Except as otherwise required by Commission order, carriers subject to §§ 61.41 through 61.49 of this chapter shall employ the rate of return value calculated for interstate access services in complying with any applicable rules under parts 36 and 69 that require a return component;

(2) Carriers subject to §§ 61.41 through 61.49 of this chapter shall be subject to § 65.600(d);

(3) Carriers subject to §§ 61.41 through 61.49 of this chapter shall continue to comply with the prescribed rate of return when offering any services specified in § 61.42(f) of this chapter unless the Commission otherwise directs; and

(4) Carriers subject to §§ 61.41 through 61.49 of this chapter shall comply with Commission information requests made pursuant to § 65.1(a).

[60 FR 28543, June 1, 1995]

Subpart B—Procedures

§65.100 Participation and acceptance of service designation.

(a) All interstate exchange access carriers, their customers, and any member of the public may participate in rate of return proceedings to determine the authorized unitary interstate exchange access or individual interstate exchange access rates of return authorized pursuant to §65.102.

(b) Participants shall state in their initial pleading in a prescription proceeding whether they wish to receive service of documents and other material filed in the proceeding. Participants that wish to receive service by hand on the filing dates when so required by this part 65 shall specify in their initial pleading in a prescription proceeding, as specified in §65.103 (b) and (c), an agent for acceptance of service by hand in the District of Columbia. The participant may elect in its pleading to receive service by mail or upon an agent at another location. When such an election is made, other participants need not complete service on the filing date, and requests for extension of time due to delays in completion of service will not be entertained.

[60 FR 28544, June 1, 1995]

§65.101 Initiation of unitary rate of return prescription proceedings.

(a) Whenever the Commission determines that the monthly average yields on ten (10) year United States Treasury securities remain, for a consecutive six (6) month period, at least 150 basis points above or below the average of the monthly average yields in effect for the consecutive six (6) month period immediately prior to the effective date of the current prescription, the Commission shall issue a notice inquiring whether a rate of return prescription according to this part should commence. This notice shall state:

(1) The deadlines for filing initial and reply comments regarding the notice;

(2) The cost of debt, cost of preferred stock, and capital structure computed in accordance with §§65.302, 65.303, and 65.304; and

(3) Such other information as the Commission may deem proper.

(b) Based on the information submitted in response to the notice described in §65.101(a), and on any other information specifically identified, the Commission may issue a notice initiating a prescription proceeding pursuant to this part.

(c) The Chief, Common Carrier Bureau, may issue the notice described in §65.101(a).

[60 FR 28544, June 1, 1995]

§65.102 Petitions for exclusion from unitary treatment and for individual treatment in determining authorized return for interstate exchange access service.

(a) Exclusion from unitary treatment will be granted for a period of two years if the cost of capital for interstate exchange service is so low as to be confiscatory because it is outside the zone of reasonableness for the individual carrier's required rate of return for interstate exchange access services.

(b) A petition for exclusion from unitary treatment and for individual treatment must plead with particularity the exceptional facts and circumstances that justify individual treatment. The showing shall include a demonstration that the exceptional facts and circumstances are not of transitory effect, such that exclusion for a period of a least two years is justified.

(c) A petition for exclusion from unitary treatment and for individual treatment may be filed at any time. When a petition is filed at a time other than that specified in §65.103(b)(2), the petitioner must provide compelling evidence that its need for individual treatment is not simply the result of short-term fluctuations in the cost of capital or similar events.

[60 FR 28544, June 1, 1995]

§65.103 Procedures for filing rate of return submissions.

(a) Rate of return submissions listed in §65.103(b)(1) and (c) may include any relevant information, subject to the page limitations of §65.104. The Chief, Common Carrier Bureau, may require from carriers providing interstate services, and from other participants submitting rate of return submissions, data, studies or other information that

are reasonably calculated to lead to a full and fair record.

(b) In proceedings to prescribe an authorized unitary rate of return on interstate access services, interested parties may file direct case submissions, responses, and rebuttals. Direct case submissions shall be filed within sixty (60) calendar days following the effective date of a Commission notice initiating a rate of return proceeding pursuant to § 65.101b). Rate of return submissions responsive to the direct case submissions shall be filed within sixty (60) calendar days after the deadline for filing direct case submissions. Rebuttal submissions shall be field within twenty-one (21) calendar days after the deadline for filing responsive submissions.

(c) Petitions for exclusion from unitary treatment and for individual treatment may be filed on the same date as the deadline for filing responsive rate of return submissions. Oppositions shall be filed within 35 calendar days thereafter. Rebuttal submissions shall be filed within 21 calendar days after the deadline for filing responsive submissions.

(d) An original and 4 copies of all rate of return submissions shall be filed with the Secretary.

(e) The filing party shall serve a copy of each rate of return submission, other than an initial submission, on all participants who have filed a designation of service notice pursuant to § 65.100(b).

[60 FR 28544, June 1, 1995]

§ 65.104 Page limitations for rate of return submissions.

Rate of return submissions, including all argument, attachments, appendices, supplements, and supporting materials, such as testimony, data and documents, but excluding tables of contents and summaries of argument, shall be subject to the following double spaced typewritten page limits:

(a) The direct case submission of any participant shall not exceed 70 pages in length.

(b) The responsive submission of any participant shall not exceed 70 pages in length.

(c) The rebuttal submission of any participant shall not exceed 50 pages in length.

(d) Petitions for exclusion from unitary treatment shall not exceed 70 pages in length. Oppositions to petitions for exclusion shall not exceed 50 pages in length. Rebuttals shall not exceed 35 pages in length.

[60 FR 28544, June 1, 1995]

§ 65.105 Discovery.

(a) Participants shall file with each rate of return submission copies of all information, including studies, financial analysts' reports, and any other documents relied upon by participants or their experts in the preparation of their submission. Information filed pursuant to this paragraph for which protection from disclosure is sought shall be filed subject to protective orders which shall be duly granted by the Chief, Common Carrier Bureau, for good cause shown.

(b) Participants may file written interrogatories and requests for documents directed to any rate of return submission and not otherwise filed pursuant to § 65.105(a). The permissible scope of examination is that participants may be examined upon any matter, not privileged, that will demonstrably lead to the production of material, relevant, decisionally significant evidence.

(c) Discovery requests pursuant to § 65.105(b), including written interrogatories, shall be filed within 14 calendar days after the filing of the rate of return submission to which the request is directed. Discovery requests that are not opposed shall be complied with within 14 calendar days of the request date.

(d) Oppositions to discovery requests made pursuant to § 65.105(b), including written interrogatories, shall be filed within 7 calendar days after requests are filed. The Chief, Common Carrier Bureau, shall rule upon any such opposition. Except as stayed by the Commission or a Court, any required response to a discovery request that is opposed shall be provided within 14 calendar days after release of the ruling of the Chief, Common Carrier Bureau.

(e) An original and 4 copies of all information described in § 65.105(a) and

all requests, oppositions, and responses made pursuant to §§65.105 (a), (b) and (d) shall be filed with the Secretary.

(f) Service of requests, oppositions, and responses made pursuant to §65.105 (b) and (d) shall be made upon all participants who have filed a designation of service notice pursuant to §65.100(b). Service of requests upon participants who have filed designation of service notices pursuant to §65.100(b) shall be made by hand on the filing dates thereof.

[60 FR 28544, June 1, 1995]

Subpart C—Exchange Carriers

§65.300 Calculations of the components and weights of the cost of capital.

(a) Sections 65.301 through 65.303 specify the calculations that are to be performed in computing cost of debt, cost of preferred stock, and financial structure weights for prescription proceedings. The calculations shall determine, where applicable, a composite cost of debt, a composite cost of preferred stock, and a composite financial structure for all local exchange carriers with annual revenues in excess of $100 million. The calculations shall be based on data reported to the Commission in FCC Report 43–02. (See 47 CFR 43.21). The results of the calculations shall be used in the represcription proceeding to which they relate unless the record in that proceeding shows that their use would be unreasonable.

(b) Excluded from cost of capital calculations made pursuant to §65.300 shall be those sources of financing that are not investor supplied, or that are otherwise subtracted from a carrier's rate base pursuant to Commission orders governing the calculation of net rate base amounts in tariff filings that are made pursuant to section 203 of the Communications Act of 1934, 47 U.S.C. 203, or that were treated as ''zero cost'' sources of financing in section 450 and subpart G of this part 65. Specifically excluded are: accounts payable, accrued taxes, accrued interest, dividends payable, deferred credits and operating reserves, deferred taxes and deferred tax credits.

[60 FR 28545, June 1, 1995]

§65.301 Cost of equity.

The cost of equity shall be determined in represcription proceedings after giving full consideration to the evidence in the record, including such evidence as the Commission may officially notice.

[60 FR 28545, June 1, 1995]

§65.302 Cost of debt.

The formula for determining the cost of debt is equal to:

$$\text{Embedded Cost of Debt} = \frac{\text{Total Annual Interest Expense}}{\text{Average Outstanding Debt}}$$

Where:

''Total Annual Interest Expense'' is the total interest expense for the most recent two years for all local exchange carriers with annual revenues of $100 million or more.

''Average Outstanding Debt'' is the average of the total debt for the most recent two years for all local exchange carriers with annual revenues of $100 million or more.

[60 FR 28545, June 1, 1995]

§65.303 Cost of preferred stock.

The formula for determining the cost of preferred stock is:

$$\text{Cost of Preferred Stock} = \frac{\text{Total Annual Preferred Dividends}}{\text{Proceeds from the Issuance of Preferred Stock}}$$

Where:

''Total Annual Preferred Dividends'' is the total dividends on preferred stock for the most recent two years for all local exchange carriers with annual revenues of $100 million or more. ''Proceeds from the Issuance of Preferred Stock'' is the average of the total net proceeds from the issuance of preferred stock for the most recent two years for all local exchange carriers with annual revenues of $100 million or more.

[60 FR 28545, June 1, 1995]

§ 65.304 Capital structure.

The proportion of each cost of capital component in the capital structure is equal to:

Proportion in the capital structure =

$$\frac{\text{Book Value of particular component}}{\text{Book Value of Debt} + \text{Book Value of Preferred Stock} + \text{Book Value of Equity}}$$

Where:

''Book Value of particular component'' is the total of the book values of that component for all local exchange carriers with annual revenues of $100 million or more.

''Book Value of Debt+Book Value of Preferred Stock+Book Value of Equity'' is the total of the book values of all the components for all local exchange carriers with annual revenues of $100 million or more.

The total of all proportions shall equal 1.00.

[60 FR 28545, June 1, 1995]

§ 65.305 Calculation of the weighted average cost of capital.

(a) The composite weighted average cost of capital is the sum of the cost of debt, the cost of preferred stock, and the cost of equity, each weighted by its proportion in the capital structure of the telephone companies.

(b) Unless the Commission determines to the contrary in a prescription proceeding, the composite weighted average cost of debt and cost of preferred stock is the composite weight computed in accordance with § 65.304 multiplied by the composite cost of the component computed in accordance with § 65.301 or § 65.302, as applicable. The composite weighted average cost of equity will be determined in each prescription proceeding.

[60 FR 28546, June 1, 1995]

§ 65.306 Calculation accuracy.

In a prescription proceeding, the final determinations of the cost of equity, cost of debt, cost of preferred stock and their capital structure weights shall be accurate to two decimal places.

[60 FR 28546, June 1, 1995]

§ 65.450 Net income.

(a) Net income shall consist of all revenues derived from the provision of interstate telecommunications services regulated by this Commission less expenses recognized by the Commission as necessary to the provision of these services. The calculation of expenses entering into the determination of net income shall include the interstate portion of plant specific operations (Accounts 6110–6441), plant nonspecific operations (Accounts 6510–6565), customer operations (Accounts 6610–6623), corporate operations (Accounts 6710–6790), other operating income and expense accounts (Accounts 7100–7160), and operating taxes (Accounts 7200–7250), except to the extent this Commission specifically provides to the contrary.

(b) Gains and losses related to the disposition of plant in service items, shall be handled as follows:

(1) Gains related to property sold to others and leased back under capital leases for use in telecommunications services shall be recorded in Account

4360 (Other Deferred Credits) and credited to Account 6563 (Amortization Expense—Tangible) over the amortization period established for the capital lease;

(2) Gains or losses related to the disposition of land and other nondepreciable items recorded in Account 7150 (Gains and Losses Resulting from the Sale of Land and Artworks) shall be included in net income for ratemaking purposes, but adjusted to reflect the relative amount of time such property was used in regulated operations and included in the rate base; and

(3) Proceeds related to the disposition of property depreciated on a group basis and used jointly in regulated and nonregulated activities, including sale-leaseback arrangements for property depreciated on a group basis, shall be credited to the related reserves and attributed to regulated and nonregulated in proportion to the accumulated regulated and nonregulated depreciation for that group.

(c) Gains or losses related to the disposition of property that was never included in the rate base shall not be considered for ratemaking purposes.

(d) Except for the allowance for funds used during construction, reasonable charitable deductions and interest related to customer deposits, the amounts recorded as nonoperating income and expenses and taxes (Accounts 7300–7450) and interest and related items (Accounts 7500–7540) and extraordinary items (Accounts 7600–7640) shall not be included unless this Commission specifically determines that particular items recorded in those accounts shall be included.

[53 FR 1029, Jan. 15, 1988, as amended at 60 FR 12139, Mar. 6, 1995]

Subpart D—Interexchange Carriers

§65.500 Net income.

The net income methodology specified in §65.450 shall be utilized by all interexchange carriers that are so designated by Commission order.

[60 FR 28546, June 1, 1995]

Subpart E—Rate of Return Reports

§65.600 Rate of return reports.

(a) Subpart E shall apply to those interstate communications common carriers and exchange carriers that are so designated by Commission order.

(b) Each local exchange carrier or group of affiliated carriers which is not subject to §§61.41 through 61.49 of this chapter and which has filed individual access tariffs during the preceding enforcement period shall file with the Commission, within three (3) months after the end of each calendar quarter, a quarterly rate of return monitoring report. Each report shall contain two parts. The first part shall contain rate of return information on a cumulative basis from the start of the enforcement period through the end of the quarter being reported. The second part shall contain similar information for the most recent quarter. The final quarterly monitoring report for the entire enforcement period shall be considered the enforcement period report. Reports shall be filed on the appropriate report form prescribed by the Commission (see §1.795 of this chapter) and shall provide full and specific answers to all questions propounded and information requested in the currently effective report form. The number of copies to be filed shall be specified in the applicable report form. At least one copy of the report shall be signed on the signature page by the responsible officer. A copy of each report shall be retained in the principal office of the respondent and shall be filed in such manner as to be readily available for reference and inspection. Final adjustments to the enforcement period shall be made by September 30 of the year following the enforcement period to ensure that any refunds can be properly reflected in an annual access filing.

(c) Each interexchange carrier subject to §§61.41 through 61.49 shall file with the Commission, within three (3) months after the end of each calendar year, the total interstate rate of return for that year for all interstate services subject to regulation by the Commission. Each such filing shall include a report of the total revenues, total expenses and taxes, operating income, and the rate base. A copy of the filing

shall be retained in the principal office of the respondent and shall be filed in such manner as to be readily available for reference and inspection.

(d)(1) Each local exchange carrier or group of affiliated carriers subject to §§61.41 through 61.49 of this chapter shall file with the Commission within three (3) months after the end of each calendar year a report of its total interstate rate of return for that year. Such filings shall include a report of the total revenues, total expenses and taxes, operating income, and the rate base. Reports shall be filed on the appropriate form prescribed by the Commission (see §1.795 of this chapter) and shall provide full and specific answers to all questions propounded and information requested in the currently effective form. The number of copies to be filed shall be specified in the applicable report form. At least one copy of the report shall be retained in the principal office of the respondent and shall be filed in such manner as to be readily available for reference and inspection.

(2) Each local exchange carrier or group of affiliated carriers subject to §§61.41 through 61.49 of this chapter shall file with the Commission within fifteen (15) months after the end of each calendar year a report reflecting any corrections or modifications to the report filed pursuant to paragraph (d)(1) of this section. Reports shall be filed on the appropriate form prescribed by the Commission (see §1.795 of this chapter) and shall provide full and specific answers to all questions propounded and information requested in the currently effective form. The number of copies to be filed shall be specified in the applicable report form. At least one copy of the report shall be retained in the principal office of the respondent and shall be filed in such manner as to be readily available for reference and inspection.

[52 FR 274, Jan. 5, 1987, as amended at 54 FR 19844, May 8, 1989; 55 FR 42385, Oct. 19, 1990; 56 FR 21617, May 10, 1991; 60 FR 28546, June 1, 1995]

Subpart F—Maximum Allowable Rates of Return

§ 65.700 Determining the maximum allowable rate of return.

(a) The maximum allowable rate of return for any exchange carrier's earnings on any access service category shall be determined by adding a fixed increment of four-tenths of one percent of the exchange carrier prescribed rate of return.

(b) The maximum allowable rate of return for any exchange carrier's overall interstate earnings for all access service categories shall be determined by adding a fixed increment of one-quarter of one percent to the exchange carrier prescribed rate of return.

(c) The maximum allowable rate of return for rates filed by local exchange carrier subject to §61.50 of this chapter, shall be determined by adding a fixed increment of one and one-half percent to the carriers prescribed rate of return.

[51 FR 11034, Apr. 1, 1986, as amended at 58 FR 36149, July 6, 1993; 60 FR 28546, June 1, 1995]

§ 65.701 Period of review.

For both exchange and interexchange carriers subject to this part, interstate earnings shall be measured over a two year period to determine compliance with the maximum allowable rate of return. The review periods shall commence on January 1 in odd-numbered years and shall end on December 31 in even-numbered years.

[60 FR 28546, June 1, 1995]

§ 65.702 Measurement of interstate service earnings.

(a) For exchange carriers, earnings shall be measured separately for each access service category for purposes of determining compliance with the maximum allowable rate of return. The access service categories shall be: an aggregated category consisting of Special Access, §69.113, and Contribution Charges for Special Access Expanded Interconnection, §69.122; Connection Charges for Expanded Interconnection,

§69.121; Common Line, §§69.104–69.105; and an aggregated category consisting of Line Termination, §69.106, Intercept, §69.108, Local Switching, §69.107, Transport, §§69.110–69.112, 69.124, 69.125, and Information, §69.109. The Billing and Collection access element shall not be included in any access service category for purposes of this part. The Commission will also separately review exchange carrier overall interstate earnings subject to this part for determining compliance with the maximum allowable rate of return determined by §65.700(b).

(b) For exchange carriers, earnings shall be measured for purposes of determining compliance with the maximum allowable rates of return separately for each study area; provided, however, that if the carrier has filed or concurred in access tariffs aggregating costs and rates for two or more study areas, the earnings will be determined for the aggregated study areas rather than for each study area separately. If an exchange carrier has not utilized the same level of study area aggregation during the entire two-year earnings review period, then the carrier's earnings will be measured for the entire two-year period on the basis of the tariffs in effect at the end of the second year of the two-year review period; provided, however, that if tariffs representing a higher level of study area aggregation were not in effect for at least eight months in the second year, then the carrier's earnings will be measured on the basis of the study area level of aggregation in effect for the majority of the two-year period; provided further, that any carrier that was not a member of the National Exchange Carrier Association or other voluntary pools for both years of the two-year review period will have its earnings reviewed individually for the full two-year period.

[51 FR 11034, Apr. 1, 1986, as amended at 57 FR 54719, Nov. 20, 1992; 58 FR 48763, Sept. 17, 1993; 60 FR 28546, June 1, 1995]

Subpart G—Rate Base

SOURCE: 53 FR 1029, Jan. 15, 1988, unless otherwise noted.

§65.800 Rate base.

The rate base shall consist of the interstate portion of the accounts listed in §65.820 that has been invested in plant used and useful in the efficient provision of interstate telecommunications services regulated by this Commission, minus any deducted items computed in accordance with §65.830.

§65.810 Definitions.

As used in this subpart ''account xxxx'' means the account of that number kept in accordance with the Uniform System of Accounts for Class A and Class B Telecommunications Companies in 47 CFR part 32.

§65.820 Included items.

(a) *Telecommunications Plant.* The interstate portion of all assets summarized in Account 2001 (Telecommunications Plant in Service) and Account 2002 (Property Held for Future Use), net of accumulated depreciation and amortization, and Account 2003 (Telecommunications Plant Under Construction), and, to the extent such inclusions are allowed by this Commission, Account 2005 (Telecommunications Plant Adjustment), net of accumulated amortization. Any interest cost for funds used during construction capitalized on assets recorded in these accounts shall be computed in accordance with the procedures in §32.2000(c)(2)(x) of this chapter.

(b) *Material and Supplies.* The interstate portion of assets summarized in Account 1220.1 (Material and Supplies).

(c) *Noncurrent Assets.* The interstate portion of Class B Rural Telephone Bank stock contained in Account 1402 (Investment in Nonaffiliated Companies) and the interstate portion of assets summarized in Account 1410 (Other Noncurrent Assets), Account 1438 (Deferred Maintenance and Retirements), and Account 1439 (Deferred Charges) only to the extent that they have been specifically approved by this Commission for inclusion. Otherwise, the amounts in accounts 1401–1500 shall not be included.

(d) *Cash Working Capital.* The average amount of investor-supplied capital needed to provide funds for a carrier's day-to-day interstate operations. Class

A carriers may calculate a cash working capital allowance either by performing a lead-lag study of interstate revenue and expense items or by using the formula set forth in paragraph (e) of this section. Class B carriers, in lieu of performing a lead-lag study or using the formula in paragraph (e) of this section, may calculate the cash working capital allowance using a standard allowance which will be established annually by the Chief, Common Carrier Bureau. When either the lead-lag study or formula method is used to calculate cash working capital, the amount calculated under the study or formula may be increased by minimum bank balances and working cash advances to determine the cash working capital allowance. Once a carrier has selected a method of determining its cash working capital allowance, it shall not change to an optional method from one year to the next without Commission approval.

(e) In lieu of a full lead-lag study, carriers may calculate the cash working capital allowance using the following formula.

(1) Compute the weighted average revenue lag days as follows:

(i) Multiply the average revenue lag days for interstate revenues billed in arrears by the percentage of interstate revenues billed in arrears.

(ii) Multiply the average revenue lag days for interstate revenues billed in advance by the percentage of interstate revenues billed in advance. (Note: a revenue lead should be shown as a negative lag.)

(iii) Add the results of paragraphs (e)(1) (i) and (ii) of this section to determine the weighted average revenue lag days.

(2) Compute the weighted average expense lag days as follows:

(i) Multiply the average lag days for interstate expenses (*i.e.*, cash operating expenses plus interest) paid in arrears by the percentage of interstate expenses paid in arrears.

(ii) Multiply the average lag days for interstate expenses paid in advance by the percentage of interstate expenses paid in advance. (Note: an expense lead should be shown as a negative lag.)

(iii) Add the results of paragraphs (e)(2) (i) and (ii) of this section to determine the weighted average expense lag days.

(3) Compute the weighted net lag days by deducting the weighted average expense lag days from the weighted average revenue lag days.

(4) Compute the percentage of a year represented by the weighted net lag days by dividing the days computed in paragraph (e)(3) of this section by 365 days.

(5) Compute the cash working capital allowance by multiplying the interstate cash operating expenses (*i.e.*, operating expenses minus depreciation and amortization) plus interest by the percentage computed in paragraph (e)(4) of this section.

[54 FR 9048, Mar. 3, 1989, as amended at 60 FR 12139, Mar. 6, 1995]

§ 65.830 Deducted items.

(a) The following items shall be deducted from the interstate rate base.

(1) The interstate portion of deferred taxes (Accounts 4100 and 4340).

(2) The interstate portion of customer deposits (Account 4040).

(3) The interstate portion of unfunded accrued pension costs (Account 4310).

(4) The interstate portion of other deferred credits (Account 4360) to the extent they arise from the provision of regulated telecommunications services. This shall include deferred gains related to sale-leaseback arrangements.

(b) The interstate portion of deferred taxes, customer deposits and other deferred credits shall be determined as prescribed by 47 CFR part 36.

(c) The interstate portion of unfunded accrued pension costs shall bear the same proportionate relationship as the interstate/intrastate expenses which give rise to the liability.

[54 FR 9049, Mar. 3, 1989]

PART 68—CONNECTION OF TERMINAL EQUIPMENT TO THE TELEPHONE NETWORK

Subpart A—General

Sec.

68.1 Purpose.
68.2 Scope.
68.3 Definitions.

68.4 Hearing aid-compatible telephones.
68.5 Waivers.
68.6 Telephones with volume control.

Subpart B—Conditions on Use of Terminal Equipment

68.100 General.
68.102 Registration requirement.
68.104 Means of connection.
68.106 Notification to telephone company.
68.108 Incidence of harm.
68.110 Compatibility of the telephone network and terminal equipment.
68.112 Hearing aid-compatibility.

Subpart C—Registration Procedures

68.200 Application for equipment registration.
68.202 Public notice.
68.204 Comments and replies.
68.206 Grant of application.
68.208 Dismissal and return of application.
68.210 Denial of application.
68.211 Registration revocation procedures.
68.212 Assignment of equipment registration.
68.213 Installation of other than ''fully protected'' non-system simple customer premises wiring.
68.214 Changes in registered equipment and circuitry.
68.215 Installation of other than ''fully-protected'' system premises wiring.
68.216 Repair of registered terminal equipment and registered protective circuitry.
68.218 Responsibility of grantee of equipment registration.
68.220 Cross reference.
68.222 AIOD trunk and station number verification.
68.224 Notice of non–hearing aid compatibility.
68.226 Registration of digital systems components.

Subpart D—Conditions for Registration

68.300 Labelling requirements.
68.302 Environment simulation.
68.304 Leakage current limitations.
68.306 Hazardous voltage limitations.
68.308 Signal power limitations.
68.310 Longitudinal balance limitations.
68.312 On-hook impedance limitations.
68.314 Billing protection.
68.316 Hearing aid compatibility magnetic field intensity requirements: technical standards.
68.317 Hearing aid compatibility volume control: technical standards.
68.318 Additional limitations.

Subpart E—Complaint Procedures

68.400 Content.
68.402 Amended complaints.
68.404 Number of copies.
68.406 Service.
68.408 Answers to complaints and amended complaints.
68.410 Replies to answers or amended answers.
68.412 Defective pleadings.
68.414 Hearing aid-compatibility: enforcement.

Subpart F—Connectors

68.500 Specifications.
68.502 Configurations.
68.504 Universal patent license agreement.
68.506 Configurations used to connect multiline communications systems such as Private Branch Exchange (PBX) and key telephone systems.

AUTHORITY: 47 U.S.C. 151, 154, 155, 201–205, 208, 215, 218, 220, 226, 227, 303, 313, 314, 403, 404, 410, 412, 522.

SOURCE: 40 FR 53022, Nov. 14, 1975, unless otherwise noted.

Subpart A—General

AUTHORITY: Secs. 4, 5, 303, 48 Stat., as amended, 1066, 1068, 1082; (47 U.S.C. 154, 155, 303).

SOURCE: 45 FR 20841, Mar. 31, 1980, unless otherwise noted.

§68.1 Purpose.

The purpose of the rules and regulations in this part is to provide for uniform standards for the protection of the telephone network from harms caused by the connection of terminal equipment and associated wiring thereto, and for the compatibility of hearing aids and telephones so as to ensure that persons with hearing aids have reasonable access to the telephone network.

(47 U.S.C. 151, 154(i), 154(j), 201–205, 218, 220, 313, 403, 412, and 5 U.S.C. 553)

[49 FR 21733, May 23, 1984]

§68.2 Scope.

(a) *General.* Except as provided for in paragraphs (b), (c), (d), (e), (f), (g), (h), (i), (j) and (k) of this section, the rules and regulations apply to direct connection:

(1) Of all terminal equipment to the public switched telephone network, for use in conjunction with all services other than party line service and coin service;

(2) Of all terminal equipment to channels furnished in connection with foreign exchange lines (customer-premises end), the station end of off-premises stations associated with PBX and Centrex services, trunk-to-station tie lines (trunk end only) and switched service network station lines (CCSA and EPSCS); and

(3) Of all of PBX (or similar) systems to private line services for tie trunk type interfaces, off-premises station lines, automatic identified outward dialing, and message registration. Services may only be added to this section as a result of rulemaking proceedings and the equipment connected to such added services is afforded a reasonable transition period.

(4) Of all customer premises wiring associated with one and two-line (non-system) residential and business telephone service.

(5) Of all terminal equipment to subrate and 1.544 Mbps digital services.

(6) Of registered terminal equipment or registered protective circuitry to Local Area Data Channels and to channels which are similar to Local Area Data Channels that are obtained as special assemblies.

(7) Of all terminal equipment or systems to voiceband private line channels for 2-point and multipoint private line services (excluding those identified in Category II, AT&T Tariff F.C.C. No. 260 or subsequent revisions) that utilize loop start, ringdown or inband signaling; or voiceband metallic channels.

(8) Of the types of test equipment specified in § 68.3, Definitions.

(9) Of all terminal equipment to Public Switched Digital Service (PSDS) Type I, II or III.

(10) Of all terminal equipment to the Integrated Services Digital Network (ISDN) Basic Rate Access (BRA) or Primary Rate Access (PRA).

(b) *Grandfathered terminal equipment (other than PBX and key telephone systems) and protective circuitry.* All terminal equipment (other than PBX and key telephone systems) and protective circuitry of a type directly connected to the public switched telephone network and services identified in § 68.2(a)(2) as of October 17, 1977, may be connected thereafter up to July 1, 1979—and may remain connected for life—without registration unless subsequently modified.

(c) *Grandfathered systems (including, but not limited to, PBX and key telephone systems).* (1) Entire systems, including their equipment, premises wiring, and protective apparatus (if any) directly connected to the public switched telephone network and services identified in § 68.2(a)(2) on June 1, 1978, may remain connected to the public switched telephone network and services identified in § 68.2(a)(2) for life without registration, unless subsequently modified, except for modifications allowed under § 68.2(c)(3).

(2) New installations of equipments may be performed (including additions to existing systems) up to January 1, 1980, without registration of any equipments involved, provided that these equipments are of a type directly connected to the public switched telephone network or services identified in § 68.2(a)(2) as of June 1, 1978. These equipments may remain connected to the public switched telephone network or services identified in § 68.2(a)(2) for life without registration, unless subsequently modified, except for modifications allowed under § 68.2(c)(3).

(3) Modifications to systems and installations involving unregistered equipment:

(i) Use of other than fully-protected premises wiring is a modification under § 68.2. As an exception to the general requirement that no modification is permitted to unregistered equipment whose use is permitted under § 68.2, certain modifications are authorized herein.

(ii) Other than fully-protected premises wiring may be used if it is qualified in accordance with the procedures and requirements of § 68.215. Since there is no ''registrant'' of unregistered equipment, the training and authority required by § 68.215(c) will have to be received from the equipment's manufacturer.

(iii) Existing separate, identifiable and discrete protective apparatus may be removed, or replaced with apparatus of lesser protective function, provided that any premises wiring to which the public switched telephone network or service identified in § 68.2(a)(2) is thereby exposed conforms to § 68.2(c)(2)

above. Minor modifications to existing unregistered equipments are authorized to facilitate installation or premises wiring, so long as they are performed under the responsible supervision and control of a person who complies with § 68.215(c). Since there is no ''registrant'' of unregistered equipment, the training and authority required by § 68.215(c) will have to be received from the manufacturer of the equipment so modified.

(d) *Grandfathered private branch exchange (or similar) systems for connection to private line type services (tie trunk type interfaces, off-premises station lines, automatic identified outward dialing, and message registration).* (1) PBX (or similar) systems, including their equipments, premises wiring, and protective apparatus (if any) directly connected to a private line type service on April 30, 1980 may remain connected to the private line type service for life without registration unless subsequently modified, except for modifications allowed under § 68.2(d)(3).

(2) New installations of equipments may be performed (including additions to existing systems) up to May 1, 1983 without registration of any equipments involved, provided that these equipments are of a type directly connected to a private line type service as of April 30, 1980. These equipments may remain connected to the private line type service for life without registration, unless subsequently modified, except for modifications allowed under § 68.2(d)(3).

(3) Modifications to systems and installations involving unregistered equipment:

(i) Use of other than fully-protected premises wiring is a modification under § 68.2. As an exception to the general requirement that no modification is permitted to unregistered equipment whose use is permitted under § 68.2, certain modifications are authorized herein.

(ii) Other than fully-protected premises wiring may be used if it is qualified in accordance with the procedures and requirements of § 68.215. Since there is no ''registrant'' of unregistered equipment, the training and authority required by § 68.215(c) will have to be received from the equipment's manufacturer.

(iii) Existing separate, identifiable and discrete protective apparatus may be removed, or replaced with apparatus of lesser protective function, provided that any premises wiring to which the private line type service is thereby exposed conforms to § 68.2(d)(ii) above. Minor modifications to existing unregistered equipments are authorized to facilitate installation or premises wiring, so long as they are performed under the responsible supervision and control of a person who complies with § 68.215(c). Since there is no ''registrant'' of unregistered equipment, the training and authority required by § 68.215(c) will have to be received from the manufacturer of the equipment so modified.

(e) *Grandfathered terminal equipment for connection to local area data channels.* All terminal equipment of a type directly connected to Local Area Data Channels or directly connected under special assembly tariff provisions to telephone company-supplied, non-loaded, metallic, greater-than-voiceband circuits for the purpose of providing limited distance data transmission as of February 10, 1986, may be connected thereafter up to August, 10, 1987, and may remain connected for life, without registration unless subsequently modified.

(f) *Grandfathered terminal equipment for connection to subrate and 1.544 Mbps digital services.* (1) Terminal equipment including premises wiring and protective apparatus (if any) directly connected to subrate or to 1.544 Mbps digital services on January 2, 1986, may remain connected and be reconnected to such digital services for life without registration, unless subsequently modified.

(2) New installations of terminal equipments, including premises wiring and protective apparatus (if any) may be installed (including additions to existing systems) up to June 30, 1987, without registration of any terminal equipment involved, provided that these terminal equipments are of a type directly connected to subrate or 1.544 Mbps digital services as of January 2, 1986. These terminal equipments

may remain connected and be reconnected to such digital services for life without registration, unless subsequently modified.

(g) *Grandfathered test equipment.* (1) Test equipment directly connected to the telephone network on February 10, 1986, is considered to be grandfathered and may remain connected to the telephone network for life without registration unless subsequently modified.

(2) New installations of test equipment may be performed up to August 10, 1987 without registration, provided that the test equipment is of a type directly connected to the public switched network or services identified in § 68.2(a)(1), (2), (3), (5), (6), and (7) for life without registration unless subsequently modified.

(h) *Grandfathered terminal equipment or systems for connection to voiceband private line channels for 2-point and multipoint private line services that utilize loop start, ringdown, or inband signaling; or voiceband metallic channels.* (1) Terminal equipment or systems, including premises wiring and protective apparatus (if any), directly connected to voiceband private lines for 2-point or multipoint service on February 10, 1986, may remain connected to that private line type service for life without registration unless subsequently modified, except for modifications allowed under § 68.2(h)(3).

(2) New installations of equipments may be installed (including additions to existing systems) up to August 10, 1987 without registration of any equipments involved, provided that these equipments are of a type directly connected to voiceband private lines for 2-point or multipoint services. These equipments may remain connected to the private line-type service for life without registration, unless subsequently modified, except for modifications allowed under § 68.2(h)(3).

(3) Modification to systems and installations involving unregistered equipment:

(i) Use of other than fully-protected premises wiring is a modification under § 68.2. As an exception to the general requirements that no modification is permitted to unregistered equipment whose use is permitted under § 68.2, certain modifications are authorized herein.

(ii) Other than fully-protected premises wiring may be used if it is qualified in accordance with procedures and requirements of § 68.215. Since there is no ''registrant'' of unregistered equipment, the training and authority required by § 68.215(c) will have to be received from the equipment's manufacturer.

(iii) Existing separate, identifiable, and discrete protective apparatus may be removed or replaced with apparatus of lesser protective function, provided that any premises wiring to which the private line service is thereby exposed conforms to § 68.2(h)(3)(ii) of this section. Minor modifications to existing unregistered equipments are authorized to facilitate installation of premises wiring, so long as they are performed under the responsible supervision and control of a person who complies with § 68.215(c). Since there is no ''registrant'' of unregistered equipment, the training and authority required by § 68.215(c) will have to be received from the manufacturer of the equipment so modified.

(i) *National defense and security.* Where the Secretary of Defense or authorized agent or the head of any other governmental department, agency, or administration (approved in writing by the Commission to act pursuant to this rule) or authorized representative, certifies in writing to the appropriate common carrier that compliance with the provisions of part 68 could result in the disclosure of communications equipment or security devices, locations, uses, personnel, or activity which would adversely affect the national defense and security, such equipment or security devices may be connected to the telephone company provided communications network without compliance with this part, provided that each written certification states that:

(1) The connection is required in the interest of national defense and security;

(2) The equipment or device to be connected either complies with the technical requirement of this part or will not cause harm to the nationwide

telephone network or telephone company employees; and

(3) The installation is performed by well-trained, qualified employees under the responsible supervision and control of a person who meets the qualifications stated in § 68.215(c).

(j) *Grandfathered equipment for connection to PSDS (Type I, II or III).* (1) Terminal equipment, including its premises wiring directly connected to PSDS (Type I, II or III) on or before January 1, 1996, may remain for service life without registration, unless subsequently modified. Service life means the life of the equipment until retired from service. Modification means changes to the equipment that affect compliance with Part 68.

(2) New installation of terminal equipment, including its premises wiring, may occur until July 1, 1997, without registration of any terminal equipment involved, provided that the terminal equipment is of a type directly connected to PSDS (Type I, II or III) as of January 1, 1996. This to PSDS (Type I, II or III) for service life without registration unless subsequently modified.

(k) *Grandfathered equipment for connection to ISDN BRA or PRA:* (1) Terminal equipment, including premises wiring directly connected to ISDN BRA or PRA on January 1, 1996, may remain connected to ISDN BRA or PRA for service life without registration, unless subsequently modified.

(2) New installation of terminal equipment, including premises wiring, may occur until July 1, 1997, without registration of any terminal equipment involved, provided that the terminal equipment is of a type directly connected to ISDN BRA or PRA as of January 1, 1996. This terminal equipment may remain connected and be reconnected to ISDN BRA or PRA for service life without registration unless subsequently modified.

Governmental departments, agencies, or administrations that wish to qualify for interconnection of equipment or security devices pursuant to this section shall file a request with the Secretary of this Commission stating the reasons why the exemption is requested. A list of these departments, agencies, or administrations that have filed requests shall be published in the FEDERAL REGISTER. The Commission may take action with respect to those requests 30 days after publication. The Commission action shall be published in the FEDERAL REGISTER. However, the Commission may grant, on less than the normal notice period or without notice, special temporary authority, not to exceed 90 days, for governmental departments, agencies, or administrations that wish to qualify for interconnection of equipment or security devices pursuant to this section. Requests for such authority shall state the particular fact and circumstances why authority should be granted on less than the normal notice period or without notice. In such cases, the Commission shall endeavor to publish its disposition as promptly as possible in the FEDERAL REGISTER.

(Secs. 4, 5, 303, 48 Stat. 1066, 1068, 1082, as amended (47 U.S.C. 154, 155, 303) (47 U.S.C. 151, 154(i), 154(j), 201–205, 218, 220, 313, 403, 412, and 5 U.S.C. 553)

[40 FR 20841, Mar. 31, 1980, as amended at 49 FR 21734, May 23, 1984; 49 FR 48719, Dec. 14, 1984; 50 FR 48208, Nov. 22, 1985; 51 FR 937, Jan. 9, 1986; 51 FR 16689, May 6, 1986; 61 FR 42387, Aug. 15, 1996]

EFFECTIVE DATE NOTE: At 61 FR 42387, Aug. 15, 1996, in § 68.2, paragraph (a) introductory text was revised and paragraphs (a)(9), (10), (j) and (k) were added, effective Nov. 13, 1996. For the convenience of the user, the superseded text is set forth as follows:

§ 68.2 Scope.

(a) *General.* Except as provided for in paragraphs (b), (c) , (d), (e), and (f), the rules and regulations in this part apply to the direct connection:

* * * * *

§ 68.3 Definitions.

As used in this part:

AIOD data channel simulator: A test circuit that simulates a telephone line during the idle and data-receiver-attached conditions of central office AIOD circuits. The schematic of Figure 68.3(g) is illustrative of the type of circuit that will be required; alternative implementations may be used provided that the same dc voltage and current characteristics and ac impedance characteristics will be presented to the AIOD equipment under test. When

used, the simulator circuit shall be operated over the entire range of resistance, polarities and voltage limits indicated in Figure 68.3(g). Whenever dc current is changed, sufficient time shall be allocated for the current to reach a steady-state condition before continuing the test.

AIOD leads: Terminal equipment leads at the interface solely to transmit Automatic Identified Outward Dialing (AIOD) data from a PBX to the public switched telephone network or to switched service networks (e.g. EPSCS) so that a telephone company can provide a PBX customer with a detailed monthly bill identifying long distance usage by individual PBX stations, tie trunks or the attendant. Data on the channel is transmitted in only one direction, from the PBX to the central office, and consists of a trunk number and a station number for each outgoing call. Two-way dc simplex signaling, as defined for the terminal equipment by the data channel simulator circuit, is used to coordinate the transmitting and receiving functions. One or more pairs of AIOD leads, each designated T (AI) and R (AI) to distinguish them from other tip and ring leads, may appear at an interface, depending on the number of central offices that process AIOD calls for the PBX. However, unless otherwise stated, these leads at the interface should be treated as telephone connections as defined in (x) of this section or as tip and ring where the term ''telephone connection'' is not used.

Auxiliary leads: Terminal equipment leads at the interface, other than telephone connections and leads otherwise defined in these Rules, which leads are to be connected either to common equipment or to circuits extending to central office equipment.

Channel equipment: Equipment in the private line channel of the telephone network that furnishes telephone tip and ring, telphone tip 1 and ring 1, and other auxiliary or supervisory signaling leads for connection at the private line channel interface (where tip 1 and ring 1 is the receive pair for 4-wire telephone connections).

Coin-implemented telephone: A telephone containing all circuitry required to execute coin acceptance and related functions within the instrument itself and not requiring coin service signaling from the central office.

Coin service: Central office implemented coin telephone service.

Companion terminal equipment: Companion terminal equipment represents the terminal equipment that would be connected at the far end of a network facility and provides the range of operating conditions that the terminal equipment which is being registered would normally encounter.

Continuity leads: Terminal equipment continuity leads at the network interface designated CY1 and CY2 which are connected to a strap in a series jack configuration for the purpose of determining whether the plug associated with the terminal equipment is connected to the interface jack.

Demarcation point: The point of demarcation and/or interconnection between telephone company communications facilities and terminal equipment, protective apparatus or wiring at a subscriber's premises. Carrier-installed facilities at, or constituting, the demarcation point shall consist of wire or a jack conforming to subpart F of part 68 of the Commission's rules. ''Premises'' as used herein generally means a dwelling unit, other building or a legal unit of real property such as a lot on which a dwelling unit is located, as determined by the telephone company's reasonable and nondiscriminatory standard operating practices. The ''minimum point of entry'' as used herein shall be either the closest practicable point to where the wiring crosses a property line or the closest practicable point to where the wiring enters a multiunit building or buildings. The telephone company's reasonable and nondiscriminatory standard operating practices shall determine which shall apply. The telephone company is not precluded from establishing reasonable classifications of multiunit premises for purposes of determining which shall apply. Multiunit premises include, but are not limited to, residential, commercial, shopping center and campus situations.

(a) *Single unit installations.* For single unit installations existing as of August 13, 1990, and installations installed after that date the demarcation point

shall be a point within 30 cm (12 in) of the protector or, where there is no protector, within 30 cm (12 in) of where the telephone wire enters the customer's premises.

(b) *Multiunit installations.* (1) In multiunit premises existing as of August 13, 1990, the demarcation point shall be determined in accordance with the local carrier's reasonable and nondiscriminatory standard operating practices. Provided, however, that where there are multiple demarcation points within the multiunit premises, a demarcation point for a customer shall not be further inside the customer's premises than a point twelve inches from where the wiring enters the customer's premises.

(2) In multiunit premises in which wiring is installed after August 13, 1990, including additions, modifications and rearrangements of wiring existing prior to that date, the telephone company may establish a reasonable and nondiscriminatory practice of placing the demarcation point at the minimum point of entry. If the telephone company does not elect to establish a practice of placing the demarcation point at the minimum point of entry, the multiunit premises owner shall determine the location of the demarcation point or points. The multiunit premises owner shall determine whether there shall be a single demarcation point location for all customers or separate such locations for each customer. Provided, however, that where there are multiple demarcation points within the multiunit premises, a demarcation point for a customer shall not be further inside the customer's premises than a point 30 cm (12 in) from where the wiring enters the customer's premises.

Digital milliwatt: A digital signal that is the coded representation of a 0 dBm, 1000 Hertz sine wave.

Direct connection: Connection of terminal equipment to the telephone network by means other than acoustic and/or inductive coupling.

E&M leads: Terminal equipment leads at the interface, other than telephone connections and auxiliary leads, which are to be connected to channel equipment solely for the purpose of transferring supervisory signals conventionally known as Types I and II E&M and schematically shown in Figures 68.3(e)(i) and 68.3(a)(ii).

Encoded analog content: The analog signal contained in coded form within a digital signal.

Equivalent power: The power of the analog signal at the output of a zero level decoder, obtained when a digital signal is the input to the decoder.

Essential Telephones: Means only coin-operated telephones, telephones provided for emergency use, and other telephones frequently needed for use by persons using such hearing aids.

Harm: Electrical hazards to telephone company personnel, damage to telephone company equipment, malfunction of telephone company billing equipment, and degradation of service to persons other than the user of the subject terminal equipment, his calling or called party.

Hearing aid compatible: Except as used at §§ 68.4(a)(3) and 68.414, the terms hearing aid compatible or hearing aid compatibility are used as defined in § 68.316, unless it is specifically stated that hearing aid compatibility volume control, as defined in § 68.317, is intended or is included in the definition.

Inband signaling private line interface: The point of connection between an inband signaling voiceband private line and terminal equipment or systems where the signaling frequencies are within the voiceband. All tip and ring leads shall be treated as telephone connections for the purposes of fulfilling registration conditions.

ISDN Basic Rate Interface: A two-wire interface between the terminal equipment and ISDN BRA. The tip and ring leads shall be treated as telephone connections for the purpose of fulfilling registration conditions.

ISDN Primary Rate Interface: A four-wire interface between the terminal equipment and 1.544 Mbps ISDN PRA. The tip, ring, tip-1, and ring-1 leads shall be treated as telephone connections for the purpose of fulfilling registration conditions.

Local area data channel (LADC) leads: Terminal equipment leads at the interface used to transmit and/or receive signals which may require greater-than-voiceband frequency spectrum

over private line metallic channels designated Local Area Data Channels (LADC). These leads should be treated as ''telephone connections'' as defined in this section or as tip and ring connections where the term ''telephone connection'' is not used.

Local area data channel simulator circuit: A circuit for connection in lieu of a Local Area Data Channel to provide the appropriate impedance for signal power tests. The schematic of Figure 68.3(k) is illustrative of the type of circuit that will be required over the given frequency ranges. When used, the simulator shall be operated over the appropriate range of loop resistance for the equipment under test, under all voltages and polarities that the terminal under test and a connected companion unit are capable of providing.

Longitudinal voltage: One half of the vector sum of the potential difference between the tip connection and earth ground, and the ring connection and earth ground for the tip, ring pair of 2-wire and 4-wire connections; and, additionally for 4-wire telephone connections, one half of the vector sum of the potential difference between the tip 1 connection and earth ground and the ring 1 connection and earth ground for the tip 1, ring 1 pair (where tip 1 and ring 1 are the receive pair).

Loop simulator circuit. A circuit that simulates the network side of a 2-wire or 4-wire telephone connection during testing. The required circuit schematics are shown in Figure 68.3(a) for 2-wire loop or ground start circuits, Figure 68.3(b) for 2-wire reverse battery circuits, Figure 68.3(c) for 4-wire loop or ground start circuits, Figure 68.3(d) for 4-wire reverse battery circuits, and Figure 68.3(j) for voiceband metallic channels. Figure 68.3(i) is an alternative termination for use in the 2-wire loop simulator circuits. Other implementations may be used provided that the same dc voltage and current characteristics and ac impedance characteristics will be presented to the equipment under test as are presented in the illustrative schematic diagrams. When used, the simulator shall be operated over the entire range of loop resistance as indicated in the figures, and with the indicated polarities and voltage limits. Whenever loop current is changed, sufficient time shall be allocated for the current to reach a steady-state condition before continuing testing.

Make-busy leads: Terminal equipment leads at the network interface designated MB and MB1. The MB lead is connected by the terminal equipment to the MB1 lead when the corresponding telephone line is to be placed in an unavailable or artificially busy condition.

Message register leads: Terminal equipment leads at the interface used solely for receiving dc message register (MR) pulses from a central office at a PBX so that message unit information normally recorded at the central office only is also recorded at the PBX. Signaling on the channel is by the application of battery and open conditions applied at the central office. No ac signaling is applied either by the PBX or by the central office. One or more pairs of MR leads, each designated T (MR) and R (MR) may appear at an interface depending on the number of PBX–CO trunks (one MR channel per PBX–CO trunk). However, unless otherwise stated, these leads at the interface should be treated at telephone connections as defined in paragraph (x) of this section or as tip and ring where the term ''telephone connection'' is not used.

Message register signaling channel simulator: A circuit that simulates a telephone line (2-wire or single conductor) and a central office message register battery feed circuit used to convey message register information from the central office to a PBX. The schematic of Figure 68.3(h) is illustrative of the type of circuit that will be required; alternative implementation may be used provided that the same dc voltage and current characteristics and ac impedance characteristics will be presented to the message register equipment under test. When used, the simulator circuit shall be operated over the entire range of resistance and voltage values indicated in Figure 68.3(h). Whenever dc current is changed, sufficient time shall be allocated for the current to reach a steady-state condition before continuing the test.

Metallic voltage: The potential difference between the tip and ring connections for the tip, ring pair of 2-wire

and 4-wire connections and additionally for 4-wire telephone connections, between the tip 1 and ring 1 connections for the tip 1, ring 1 pair (where tip 1 and ring 1 are the receive pair).

Multi-port equipment: Equipment that has more than one telephone connection with provisions internal to the equipment for establishing transmission paths among two or more telephone connections.

Network port: An equipment port of registered protective circuitry which port faces the telephone network.

Non-system premises wiring: Wiring which is used with one and two-line business and residence services, located at the subscriber's premises.

(a) *Fully protected non-system premises wiring.* Non-system premises wiring which is electrically behind registered (or grandfathered) equipment or protective circuitry which assures that electrical contact between the wiring and commercial power wiring or earth ground will not result in hazardous voltages at the telephone network interface.

(b) *Unprotected non-system premises wiring:* All other non-system premises wiring.

Off-premises line simulator circuit: A load impedance for connection, in lieu of an off-premises station line, to PBX (or similar) telephone system loop start circuits (Figure 68.3(f)) during testing. The schematic diagram of Figure 68.3(f) is illustrative of the type of circuit which will be required; alternative implementations may be used provided that the same dc voltage and current characteristics and ac impedance characteristics will be presented to the equipment under test as are presented in the illustrative schematic diagram. When used, the simulator shall be operated over the entire range of loop resistances as indicated in Figure 68.3(f), and with the indicated polarities. Whenever loop current is changed, sufficient time shall be allocated for the current to reach a steady-state condition before continuing testing.

Off-premises station interface: The point of connection between PBX telephone systems (or similar systems) and telephone company private line communication facilities used to access registered station equipment located off the premises. Equipment leads at this interface are limited to telephone tip and ring leads (designated T(OPS) and R(OPS)) where the PBX employs loop-start signaling at the interface. Unless otherwise noted, all T(OPS) and R(OPS) leads shall be treated as telephone connections for purposes of fulfilling registration conditions.

One-port equipment: Equipment which has either exactly one telephone connection, or a multiplicity of telephone connections arranged so that no transmission among such telephone connections, within the equipment, is intended.

Power connections: The connections between commercial power and any transformer, power supply rectifier, converter or other circuitry associated with registered terminal equipment or registered protective circuitry. The following are not power connections.

(a) Connections between registered terminal equipment or registered protective circuitry and sources of non-hazardous voltages (see § 68.306(b)(4) for a definition of non-hazardous voltages).

(b) Conductors which distribute any power within registered terminal equipment or within registered protective circuitry.

(c) Green wire ground (the grounded conductor of a commercial power circuit which is UL-identified by a continuous green color).

Private line channel: Telephone company dedicated facilities and channel equipment used in furnishing private line service from the telephone network for the exclusive use of a particular party or parties.

Private Radio Services: Means private land mobile radio services and other communications services characterized by the Commission in its rules as private radio services.

PSDS Type II Analog Mode Loop Simulator Circuit: A circuit simulating the network side of the two-wire telephone connection that is used for testing terminal equipment to be connected to the PSDS Type II loops. Figure 68.3(m) shows the type of circuit required. Other test circuit configurations may be used provided they operate at the

same DC voltage and current characteristics and AC impedance characteristics presented in the illustrated circuit. When utilized, the simulator should be operated over the entire range of loop resistances, and with the indicated voltage limits and polarities. Whenever the loop current is changed, sufficient time shall be allowed for the current to reach a steady-state condition before continuing testing.

Public Mobile Services: Means air-to-ground radiotelephone services, cellular radio telecommunications services, offshore radio, rural radio service, public land mobile telephone service, and other common carrier radio communications services covered by part 22 of title 47 of the Code of Federal Regulations.

Public Switched Digital Service Type I (PSDS Type I): This service functions only in a digital mode. It employs a transmission rate of 56 Kbps on both the transmit and receive pairs to provide a four-wire full duplex digital channel. Signaling is accomplished using bipolar patterns which include bipolar violations.

Public Switched Digital Service Type II (PSDS Type II): This service functions in two modes, analog and digital. Analog signaling procedures are used to perform supervisory and address signaling over the network. After an end-to-end connection is established, the Switched Circuit Data Service Unit (SCDSU) is switched to the digital mode. The time compression multiplexing (TCM) transmission operated at a digital transmission speed of 144 Kbps to provide full-duplex 56 Kbps on the two-wire access line.

Public Switched Digital Service Type III (PSDS Type III): This service functions only in a digital mode. It uses a time compression multiplexing (TCM) rate of 160 Kbps, over one pair, to provide two full-duplex channels—an 8 Kbps signaling channel for supervisory and address signaling, and a 64 Kbps user data channel on a two-wire access line.

Registered protective circuitry: Separate, identifiable and discrete electrical circuitry designed to protect the telephone network from harm, which is registered in accordance with the rules and regulations in Subpart C of this part.

Registered terminal equipment: Terminal equipment which is registered in accordance with the rules and regulations in Subpart C of this part.

Ringdown private line interface: The point of connection between ringdown voiceband private line service and terminal equipment or systems which provide ringing (20 or 30 Hz) in either direction for alerting only. All tip and ring leads shall be treated as telephone connections for the purposes of fulfilling registration conditions. On 2-wire circuits the ringing voltage is applied to the ring conductor with the tip conductor grounded. On 4-wire circuits the ringing voltage is simplexed on the tip and ring conductors with ground simplexed on the tip (1) and ring (1) conductors.

Secure Telephones: Means telephones that are approved by the United States Government for the transmission of classified or sensitive voice communications.

Specialty adapters: Adapters that contain passive components such as resistive pads or bias resistors typically used for connecting data equipment having fixed-loss loop or programmed data jack network connections to key systems or PBXs.

Subrate digital service: A digital service providing for the full-time simultaneous two-way transmission of digital signals at synchronous speeds of 2.4, 4.8, 9.6 or 56 kbps.

Switched Circuit Data Service Unit (SCDSU): A CPE device, with PSDS functionality, located between the Network Interface and the data terminal equipment. (It also is sometimes referred to as Network Channel Terminating Equipment).

System premises wiring: Wiring which connects separately-housed equipment entities or system components to one another, or wiring which connects an equipment entity or system component with the telephone network interface, located at the customer's premises 'd not within an equipment housing.

(a) *Fully protected systems premises wiring.* Premises wiring which is either:

(1) No greater than 15 meters (50 feet) in length (measured linearly between the points where it leaves equipment or connector housings) and registered as a component of and supplied to the user

with the registered terminal equipment or protective circuitry with which it is to be used. Such wiring shall either be pre-connected to the equipment or circuitry, or may be so connected by the user (or others) if it is demonstrated in the registration application that such connection by the untrained will not result in harm, using relatively fail-safe means.

(2) A cord which complies with the previous subsection either as an integral length or in combination with no more than one connectorized extension cord. If used, the extension cord must comply with the requirements of § 68.200(h) of these Rules.

(3) Wiring located in an equipment room with restricted access, provided that this wiring remains exposed for inspection and is not concealed or embedded in the building's structure, and that it conforms to § 68.215(d).

(4) Electrically behind registered (or grandfathered) equipment, system components or protective circuitry which assure that electrical contact between the wiring and commercial power wiring or earth ground will not result in hazardous voltages or excessive longitudinal imbalance at the telephone network interface.

(b) *Protected system premises wiring requiring acceptance testing for imbalance.* Premises wiring which is electrically behind registered (or grandfathered) equipment, system components or circuitry which assure that electrical contact between the wiring and commercial power wiring will not result in hazardous voltages at the telephone network interface.

(c) *Unprotected system premises wiring.* All other premises wiring.

Telephone connection: Connection to telephone network tip and ring leads for 2-wire and 4-wire connections and, additionally, for 4-wire telephone connections, tip 1 and ring 1 leads and all connections derived from these leads. The term ''derived'' as used here means that the connections are not separated from telephone tip and ring or from telephone tip 1 and ring 1 by a sufficiently protective barrier. Part 68 Rules that apply specifically to telephone network tip and ring pairs shall also apply to telephone network tip 1 and ring 1 pairs unless otherwise specified. In 4-wire connections, leads designated tip and ring at the interface are for transmitting voice frequencies toward the network and leads designated tip 1 and ring 1 at the interface are for receiving voice frequencies from the network.

Telephone network: The public switched network and those private lines which are defined in § 68.2(a) (2) and (3).

Terminal port: An equipment port of registered protective circuitry which port faces remotely-located terminal equipment.

Test Equipment: Equipment connected at the customer's premises that is used on the customer's side of the network interfaces to measure characteristics of the telephone network, or to detect and isolate a communications fault between a terminal equipment entity and the telephone network. Registration is required for test equipment capable of functioning as portable traffic recorded or equipment capable of transmitting or receiving test tones; except registration is not required for devices used by telephone companies solely for network installation and maintenance activities such as hand-held data terminals, linesmen's handsets, and subscriber line diagnostic devices.

Tie trunk transmission interfaces.

(a) 2-Wire: A 2-wire transmission interface with a path that is essentially lossless (except for 2dB switched pad operation, or equivalent) between the interface and the 2-wire or 4-wire, transmission reference point of the terminal equipment.

(b) 4-Wire lossless: A 4-wire transmission interface with a path that is essentially lossless (except for 2dB switched pad operation, or equivalent) between the interface and the 2-wire or 4-wire transmission reference point of the terminal equipment; and

(c) 4-Wire Conventional Terminating Set (CTS): A 4-wire interface with a path to the transmission reference point that has a conventional terminating set providing 2-wire to 4-wire conversion with approximately 4dB of loss and having no gain elements. This device's loss will be referred to as a ''nominal'' 4dB, but in no case is it allowed to be less than 3dB.

(d) Direct Digital Interface: An interface between a digital PBX and a digital transmission facility.

(e) Digital Tandem 4-Wire Interface: A 4-wire digital interface between digital terminal equipment and a digital transmission facility operating at 1.544 Mbps or subrate connecting terminal equipment that provide tandem connections.

(f) Digital Satellite 4-wire Interface: A 4-wire digital interface between digital terminal equipment and a digital transmission facility operating at 1.544 Mbps or subrate connecting terminal equipment that does not provide tandem connections to other digital terminal equipment.

Voiceband metallic private line channel interface: The point of connection between a voiceband metallic private line channel and terminal equipment or systems where the network does not provide any signaling or transmission enhancement. Registered terminal equipment or systems may use convenient signaling methods so long as the signals are provided in such a manner that they cannot interfere with adjacent network channels. All tip and ring leads shall be treated as telephone connections for the purpose of fulfilling registration conditions.

Zero level decoder: A decoder that yields an analog level of 0 dBm at its output when the input is the digital milliwatt signal. See Figure 68.3(l).

1.544 Mbps digital CO 4-wire interface: A 4-wire digital interface between digital terminal equipment and a digital transmission facility operating at 1.544 Mbps connecting to a serving central office.

1.544 Mbps digital service: A full-time dedicated private line circuit used for the transmission of digital signals at a speed of 1.544 Mbps.

LOOP SIMULATOR FOR LOOP START AND GROUND START CIRCUITS

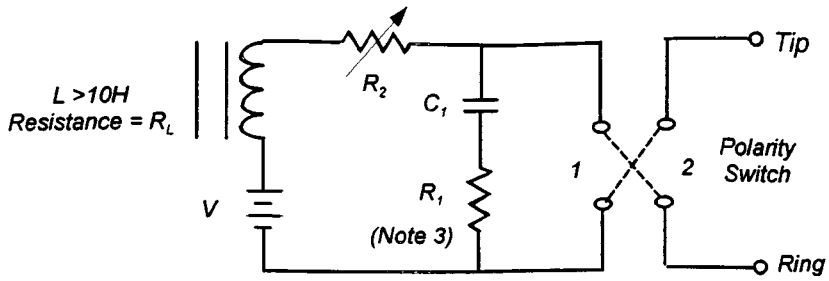

C_1 = 500 mfd -10% + 50% R_1 = 600 ohms +/- 1%

Condition	V - Volts	Switch Position for Test	$R_2 + R_L$
1	Min 42.5 Max 56.5	Both	Continuously variable over 400 to 1740 ohms
2	105	2	2000 ohms

1. Means shall be used to generate, at the point of tip and ring connections to the terminal equipment or protective circuitry, the paramenters of dc line current and ac impedance which are generated by the illustrative circuit depicted above (as appropriate for the equipment under test).
2. In the Longitudinal Balance Limitations, Section 68.310, the use of the "dc portion of the loop simulator circuit" is specified. In such case components of R_1 and C_1 should be removed.
3. Tests for compliance may be made with either R_1 = 600 ohms or R_1, replaced by the alternative configuration shown in Figure 68.3(i).

Figure 68.3(a)

Loop Simulator for Reverse Battery Circuits

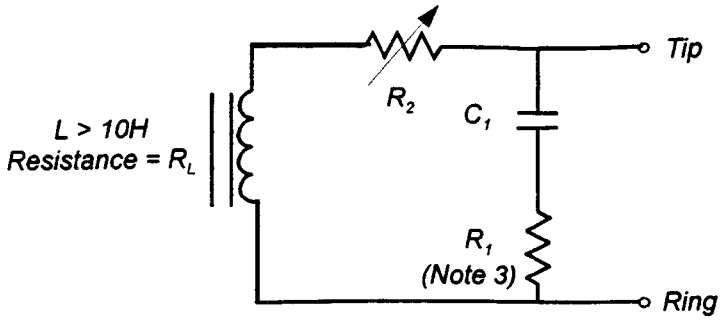

C_1 = 500 mFd -10% + 50%

R_1 = 600 ohms +/- 1%

Notes for Figure 68.3(a) apply also to this drawing

$R_2 + R_L$
Continuously variable over 400 to 2450 ohms

Figure 68.3(b)

LOOP SIMULATOR CIRCUIT FOR 4-WIRE
LOOP START AND GROUND START

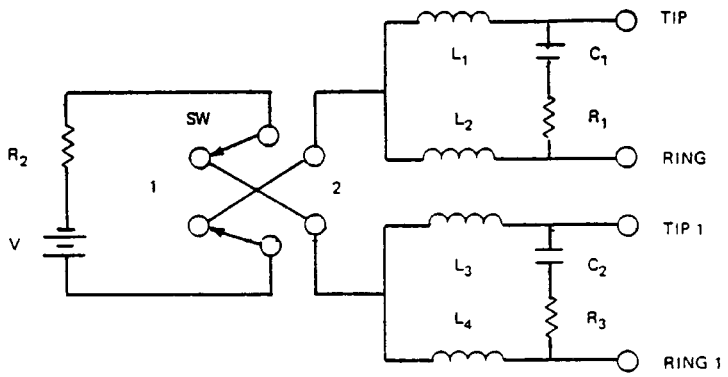

SW = POLARITY SWITCH

$L_1 = L_2 = L_3 = L_4 \geq 5H$ (RESISTANCE = R_{L1}, R_{L2}, R_{L3}, R_{L4})
$R_1 = R_3 = 600$ OHMS, ± 1%
$C_1 = C_2 = 500\mu FD$, −10%, + 50%

CONDITION	V VOLTS		SWITCH POSITION FOR TEST	$R_2 + R_L$ *
1	MIN 42.5	MAX 56.5	BOTH	CONTINUOUSLY VARIABLE OVER 400 TO 1740 Ω
2	105		2	2000Ω

$$R_L = \frac{R_{L1}\ R_{L2}}{R_{L1}+R_{L2}} + \frac{R_{L3}\ R_{L4}}{R_{L3}+R_{L4}}$$

FIGURE 68.3(C)

LOOP SIMULATOR CIRCUIT FOR 4-WIRE
REVERSE BATTERY CIRCUITS

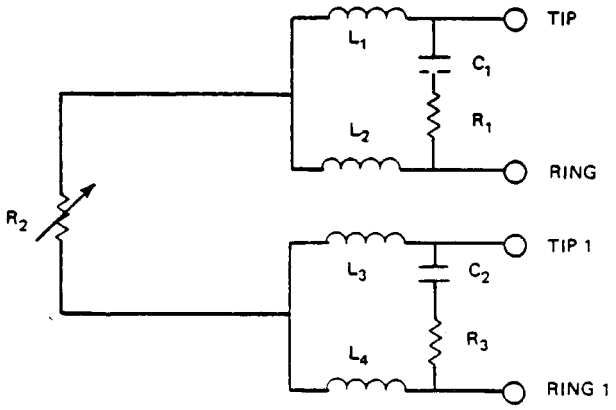

$L_1 = L_2 = L_3 = L_4 \geqslant 5H$ (RESISTANCE = R_{L1}, R_{L2}, R_{L3}, R_{L4})
$R_1 = R_3 = 600$ OHMS, ± 1%
$C_1 = C_2 = 500\mu FD$, -10%, + 50%

$R_2 + R_L$
CONTINUOUSLY VARIABLE OVER 400 TO 2450Ω

$$R_L = \frac{R_{L1} R_{L2}}{R_{L1} + R_{L2}} + \frac{R_{L3} R_{L4}}{R_{L3} + R_{L4}}$$

FIGURE 68.3(D)

REGISTERED TERMINAL EQUIPMENT
ON "A" SIDE OF INTERFACE

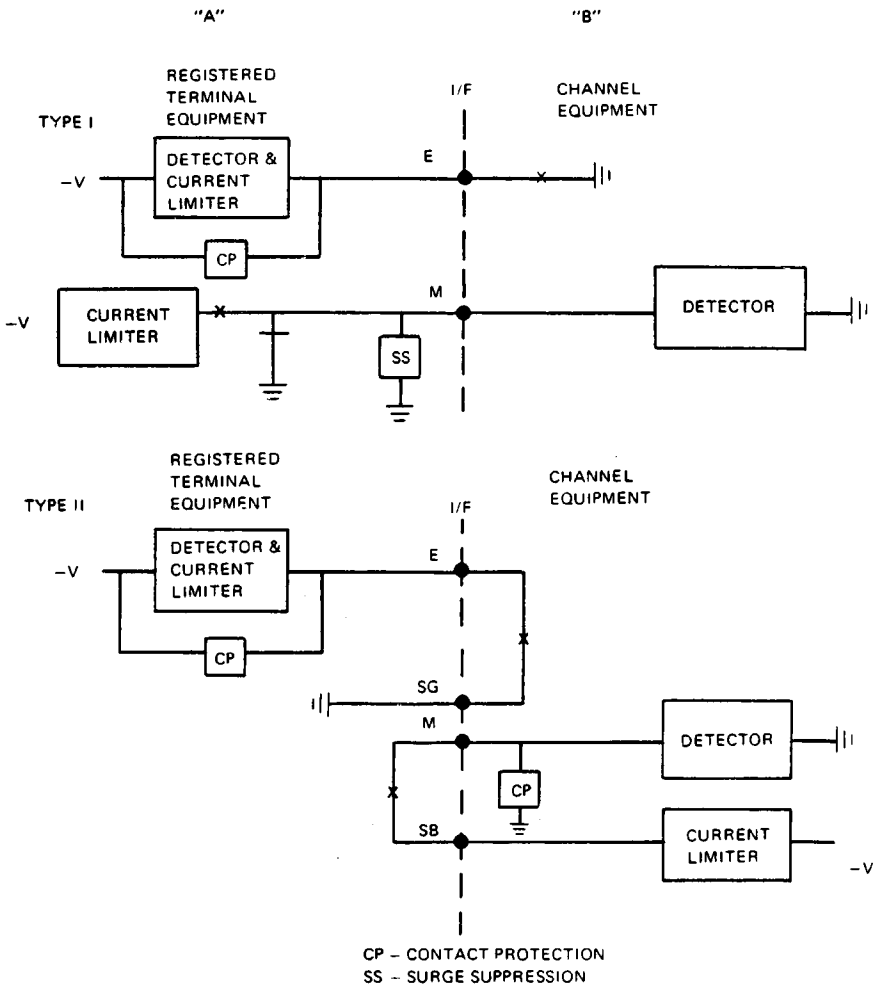

FIGURE 68.3 (e) (i)
E&M TYPES I & II SIGNALING

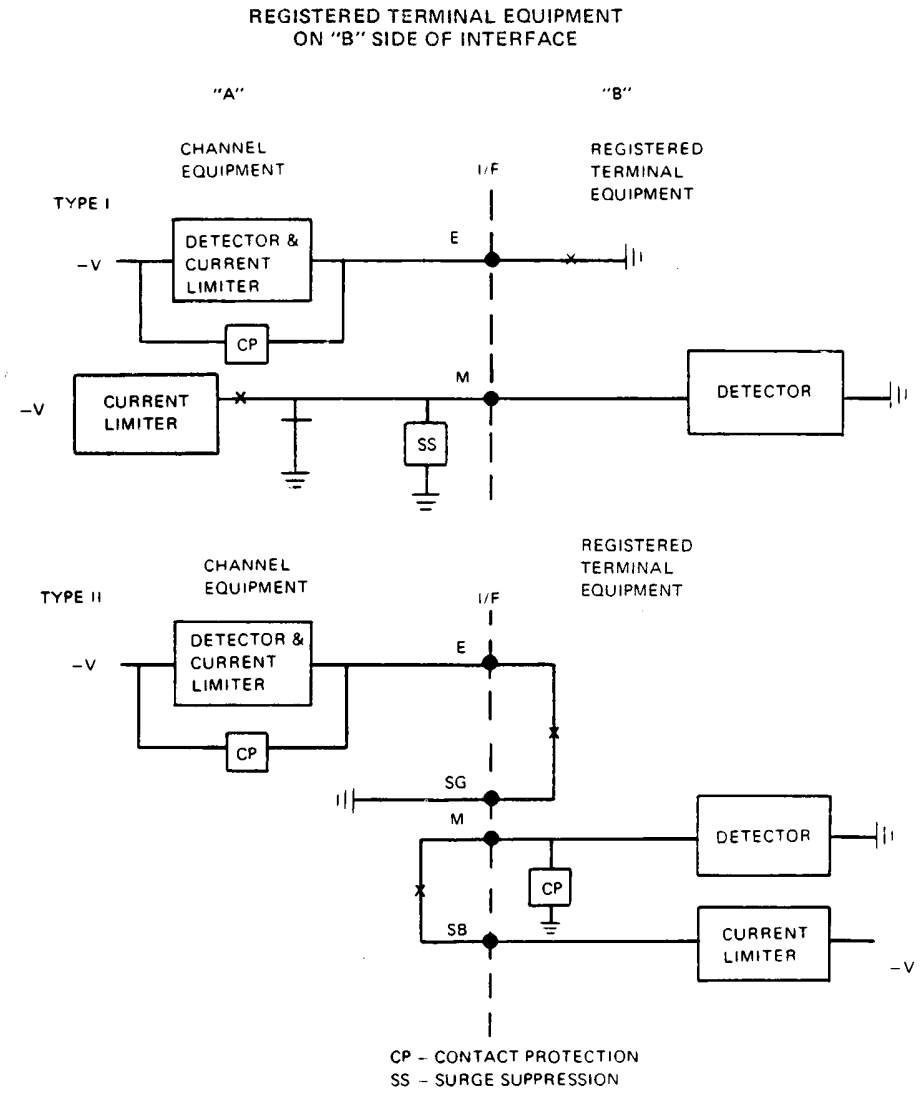

FIGURE 68.3 (e) (i)
E&M TYPES I & II SIGNALING

- 8 -

OFF-PREMISES LOOP SIMULATOR

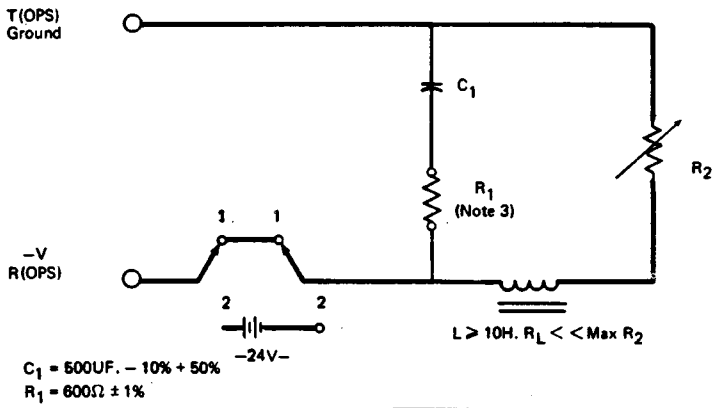

		$R_2 + R_L$ Continuously Variable Over The Following Range		
Condition	Switch Position For Test	Class A	Class B	Class C
1	1	R_L To 200Ω	R_L To 800Ω	R_L To 1800Ω
2	2	Not Applicable	200 To 2300Ω	900 To 3300Ω

The minimum dc current present for all resistance ranges of conditions 1 and 2 shall be 16 ma.

NOTES:

1. Means shall be used to generate, at the point of tip (T OPS) and ring (R OPS) connections to the PBX, the range of resistance and impedance which are employed by the illustrative circuit depicted above.
2. In the longitudinal balance limitations, Section 68.310, the use of the "dc portion of the line simulator" is specified. In such case, components R_1 and C_1 above shall be removed.
3. Tests for compliance may be made with either R_1 = 600 ohms or R_1 replaced by the alternative termination shown in Figure 68.3(i).

Figure 68.3(f)

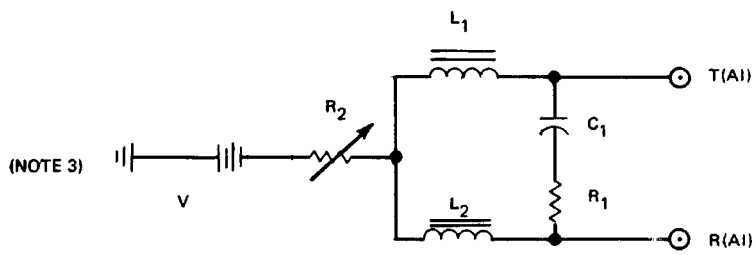

$L_1 = L_2 \geqslant 5H$

$R_1 = 600\Omega \pm 1\%$ (NOTE 2)

$C_1 = 500\mu F, -10\%, +50\%$

OPERATING STATE	V. VOLTS		$R_2 + R_L$,* OHMS (NOTE 5)
	MAX.	MIN.	
1	+3 (NOTE 4)	−3 (NOTE 4)	600-1400
2	+3	−3	600-1400
3	−59.5	−39.5	300-1400

$$*R_L = \frac{R_{L1}R_{L2}}{R_{L1}+R_{L2}}$$

NOTES:

1. Means shall be provided to generate, at the point of T(AI) and R(AI) connections to the PBX, the dc line current and impedance values that are employed by the illustrative circuit depicted above.

2. For signal power measurements in 68.308 (d) and (e) other than voiceband metallic and in the 3995 to 4005 hertz band, use resistive terminations specified in place of R_1.

3. Ground lead should be bonded to simplex signaling ground of registered terminal equipment.

4. The ±3-volt battery shall be used to extend the range of total battery applied to an overall circuit. Thus, if the registered terminal equipment condition provides -42.5 to -56.5 volts, the overall circuit (simulator and PBX AIOD) shall be tested over a range of -39.5 to 59.5 volts.

5. Continuously variable over the range specified.

FIGURE 68.3 (g)

AIOD DATA CHANNEL SIMULATOR CIRCUIT

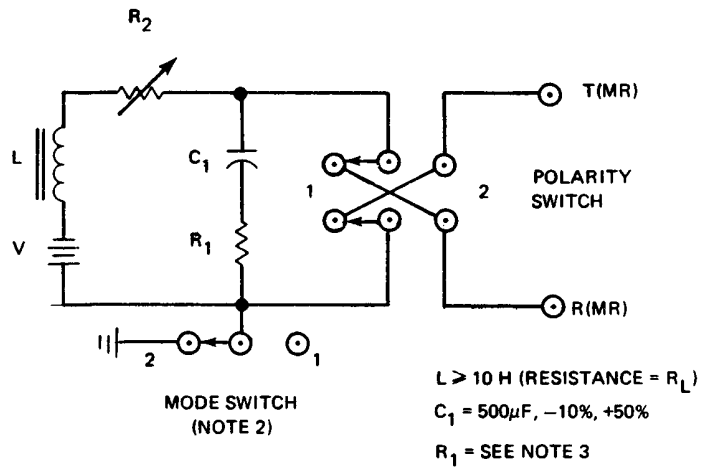

CONDITION	V, VOLTS		POLARITY SWITCH POSITION	MODE SWITCH POSITION	$R_2 + R_L$ OHMS (NOTE 4)
	MIN	MAX			
1	42.5	56.5	BOTH	1	250-1450
2	39.5	59.5	BOTH	2	250- 850
3	63.5	83.5	BOTH	1	1450-2650

NOTES:

1. Means shall be used to generate, at the point of T(MR) and R(MR) connections to the PBX, the range of resistance and impedance values that are employed by the illustrative circuit depicted above.

2. Mode switch position 1 is for metallic return operation; mode switch position 2 is for ground return operation.

3. For signal power measurements specified in 68.308, use Figures 68.308 (b) and (c) for R_1.

4. Continuously variable over range shown.

FIGURE 68.3 (h)

MESSAGE REGISTER SIGNALING CHANNEL SIMULATOR

- 9 -

ALTERNATIVE TERMINATION

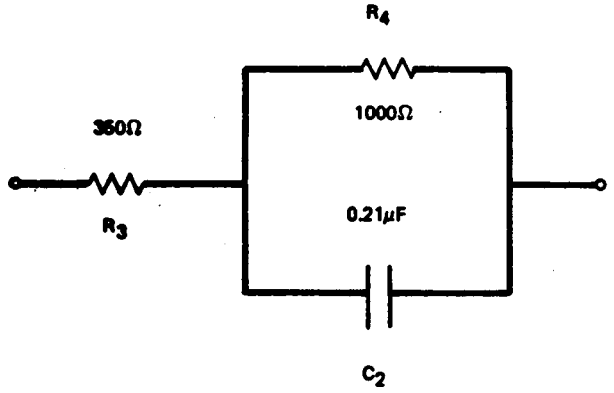

R_3 = 350Ω ± 1%

R_4 = 1000Ω ± 1%

C_2 = 0.21μF ± 1%

NOTE:

When this alternative termination is used during signal power compliance testing, it replaces R_1 (600Ω) in the loop simulator circuit.

Figure 68.3(i)

- 10 -

LOOP SIMULATOR CIRCUIT VOICEBAND METALLIC CHANNELS

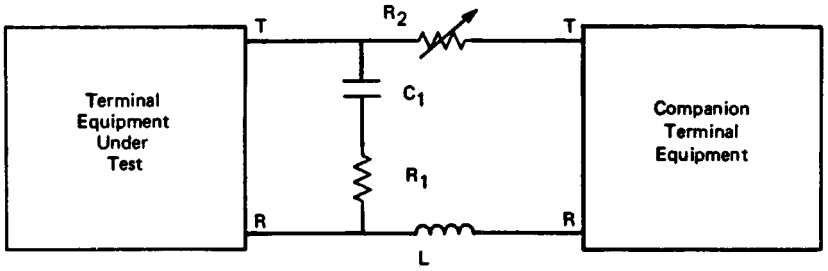

C_1 = 500μF -10%, +5%
R_1 = 600 OHMS ± 1%
L > 10H., Resistance = R_L

$R_2 + R_L$
Continually Variable From R_L To R_X

Where: R_X = Signaling Range Of Terminal Equipment Under Test And,

$R_L << R_X$

NOTES:

1. For Longitudinal Balance Measurements (Section 68.310), The DC Portion Of The Loop Simulator Should Be Provided By Removing R_1 And C_1. Companion Terminal Equipment Grounds (Including Power Supplies) Must Be Isolated From Longitudinal Balance Circuit Grounds.

Figure 68.3 (j)

10a

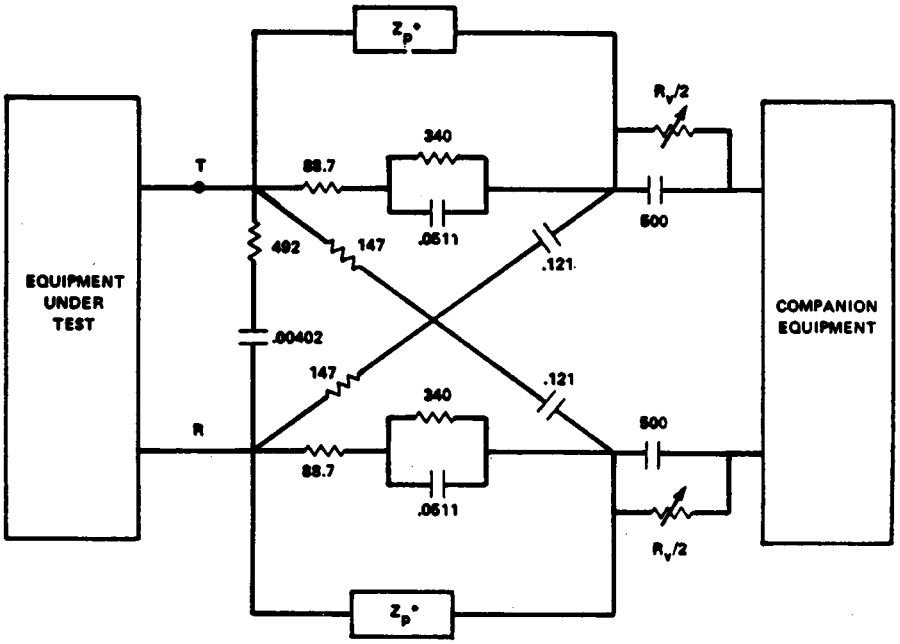

RESISTANCES (OHMS), CAPACITANCES (μF) TOLERANCES ± 2%

$R_v + R_p$ = 50 THRU 3000 OHMS

$*Z_p$ = MAGNITUDE OF THE LOW PASS FILTER IMPEDANCE = < 25 Ω DC; > 3 KΩ 10 Hz – 6 Hz

(R_p) ½ = DC RESISTANCE OF LOW PASS FILTER Z_p ‖ 428.7 Ω

FIGURE 68.3 (K) LADC IMPEDANCE SIMULATOR FOR METALLIC VOLTAGE TESTS.

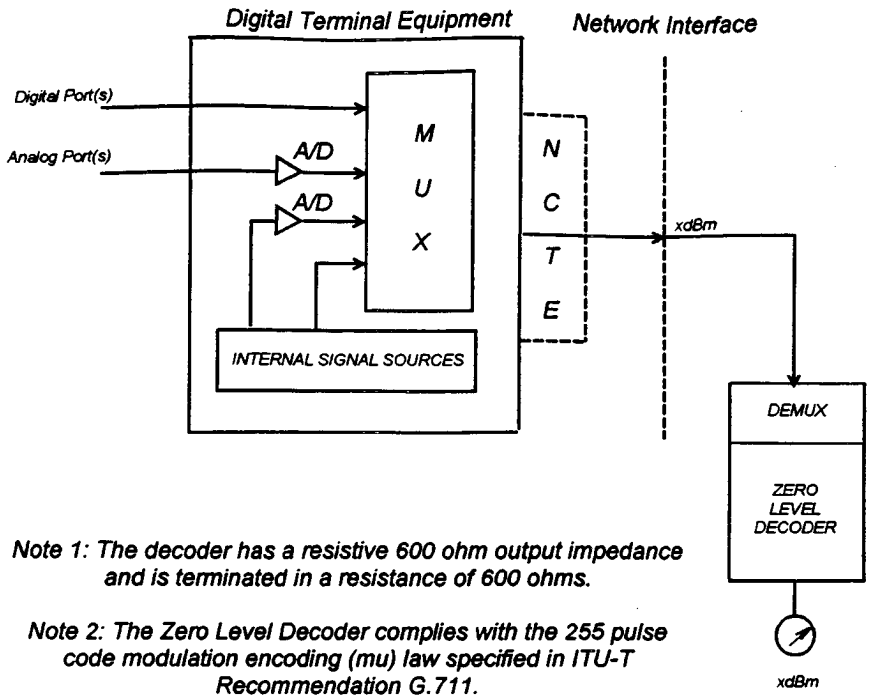

Note 1: The decoder has a resistive 600 ohm output impedance and is terminated in a resistance of 600 ohms.

Note 2: The Zero Level Decoder complies with the 255 pulse code modulation encoding (mu) law specified in ITU-T Recommendation G.711.

ZERO-LEVEL DECODER TEST CONFIGURATION FOR SUBRATE AND 1.544 MBPS DIGITAL CHANNELS

Figure 68.3 (l)

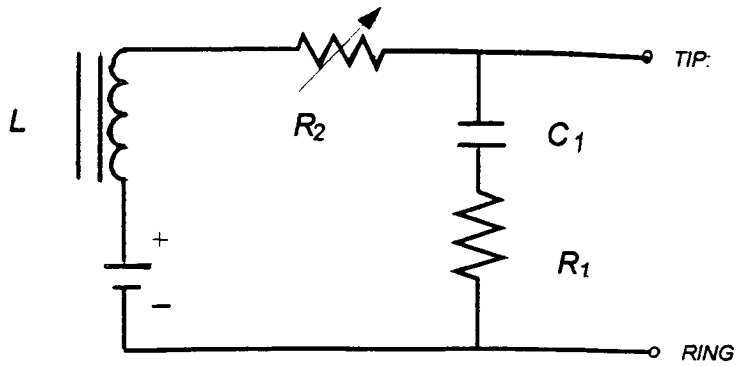

$L \geq 10H$ (Resistance = R_L)

R_1 = 600 ohms +/- 1%

C_1 = 500mF, -10%, +50%

TEST CONDITIONS FOR ANALOG MODE

V (volts) Min	Max	R2 + RL (ohms) continuously variable
36	46	610 to 1510

SIMULATOR CIRCUIT FOR PSDS IN ANALOG MODE
Fig 68.3(m)

[45 FR 20841, Mar. 31, 1980, as amended at 46 FR 40192, Aug. 7, 1981; 49 FR 21734, May 23, 1984; 49 FR 48720, Dec. 14, 1984; 50 FR 48208, Nov. 22, 1985; 51 FR 937, Jan. 9, 1986; 54 FR 21430, May 18, 1989; 55 FR 28629, July 12, 1990; 58 FR 44907, Aug. 25, 1993; 61 FR 42186, Aug. 14, 1996; 61 FR 42387, Aug. 15, 1996]

EFFECTIVE DATE NOTES: 1. At 61 FR 42186, Aug. 14, 1996, in §68.3, the definition of *Hearing aid compatible:* was added, effective Oct. 23, 1996.

2. At 61 FR 42387, Aug. 15, 1996, in §68.3, the definition of *Test equipment* was revised; the definition of *Zero level decoder* was amended by removing the words ''See Figure 68.3(j)'' and adding in its place ''See Figure 68.3(l)''; the definitions of *ISDN Basic Rate Interface, ISDN Primary Rate Interface, PSDS Type II Analog Mode Loop Simulator Circuit, Public Switched Digital Service Type I (PSDS Type I), Public Switched Digital Service Type II (PSDS Type II), Public Switched Digital Service Type III (PSDS Type III), Switched Circuit Data Service Unit (SCDSU)* and figure 68.3(m) were added; figures 68.3(a), 68.3(b), 68.3(l) were revised, effective Nov. 13, 1996. For the superseded figures see the 1995 edition of the CFR. For the convenience of the user, the superseded text for the definition of *Test equipment* is set forth as follows:

§68.3 Definitions.

* * * * *

Test equipment. Equipment connected at the customer's premises that is used on the customer's side of the network interfaces: (a) to measure characteristics of the telephone network; or (b) to detect and/or isolate a communications fault between a terminal equipment entity and the telephone network. Registration is required for test equipment capable of functioning as temporary terminal equipment, such as portable traffic recorders or equipment capable of transmitting test tones, either as generators or responders.

* * * * *

§68.4 Hearing aid-compatible telephones.

(a)(1) Except for telephones used with public mobile services, telephones used with private radio services, and cordless and secure telephones, every telephone manufactured in the United States (other than for export) or imported for use in the United States after August 16, 1989, must be hearing aid compatible, as defined in §68.316. Every cordless telephone manufactured in the United States (other than for export) or imported into the United States after August 16, 1991, must be hearing aid compatible, as defined in §68.316.

(2) Unless otherwise stated and except for telephones used with public mobile services, telephones used with private radio services and secure telephones, every telephone listed in §68.112 must be hearing aid compatible, as defined in §68.316.

(3) A telephone is hearing aid-compatible if it provides internal means for effective use with hearing aids that are designed to be compatible with telephones which meet established technical standards for hearing aid compatibility.

(4) The Commission shall revoke or otherwise limit the exemptions of paragraph (a)((1) of this section for telephones used with public mobile services or telephones used with private radio services if it determines that (i) such revocation or limitation is in the public interest; (ii) continuation of the exemption without such revocation or limitation would have an adverse effect on hearing-impaired individuals; (iii) compliance with the requirements of §68.4(a)(1) is technologically feasible for the telephones to which the exemption applies; and (iv) compliance with the requirements of §68.4(a)(1) would not increase costs to such an extent that the telephones to which the exemption applies could not be successfully marketed.

[54 FR 21430, May 18, 1989, as amended at 55 FR 28763, July 13, 1990; 57 FR 27183, June 18, 1992; 61 FR 42186, Aug. 14, 1996]

EFFECTIVE DATE NOTE: At 61 FR 42186, Aug. 14, 1996, in §68.4, paragraphs (a)(1) and (2) were revised, effective Oct. 23, 1996. For the convenience of the user, the superseded text is set forth as follows:

§68.4 Hearing aid-compatible telephones.

(a)(1) Except for telephones used with public mobile services, telephones used with private radio services, and cordless and secure telephones, every telephone manufactured in the United States (other than for export) or imported for use in the United States after August 16, 1989, must be hearing aid compatible. Every cordless telephone manufactured in the United States (other than for export) or imported into the United States after August 16, 1991, must be hearing aid compatible.

(2) Unless otherwise stated and except for telephones used with public mobile services, telephones used with private radio services and secure telephones, every telephone listed in §68.112 must be hearing aid-compatible.

* * * * *

§ 68.5 Waivers.

The Commission may, upon the application of any interested person, initiate a proceeding to waive the requirements of § 68.4(a)(1) with respect to new telephones, or telephones associated with a new technology or service. The Commission shall not grant such a waiver unless it determines, on the basis of evidence in the record of such proceeding, that such telephones, or such technology or service, are in the public interest, and that (a) compliance with the requirements of § 68.4(a)(1) is technologically infeasible, or (b) compliance with such requirements would increase the costs of the telephones, or of the technology or service, to such an extent that such telephones, technology, or service could not be successfully marketed. In any proceeding under this section to grant a waiver from the requirements of § 68.4(a)(1), the Commission shall consider the effect on hearing-impaired individuals of granting the waiver. The Commission shall periodically review and determine the continuing need for any waiver granted pursuant to this section.

[54 FR 21430, May 18, 1989]

§ 68.6 Telephones with volume control.

As of November 1, 1998, all telephones, including cordless telephones, as defined in § 15.3(j) of this chapter, manufactured in the United States (other than for export) or imported for use in the United States, must have volume control in accordance with § 68.317. Secure telephones, as defined by § 68.3, are exempt from this section, as are telephones used with public mobile services or private radio services.

[61 FR 42186, Aug. 14, 1996]

EFFECTIVE DATE NOTE: At 61 FR 42186, Aug. 14, 1996, § 68.6 was added, effective Oct. 23, 1996.

Subpart B—Conditions on Use of Terminal Equipment

§ 68.100 General.

In accordance with the rules and regulations in subpart B of this part, terminal equipment may be directly connected to the public switched telephone network and to those private line services included in § 68.2(a).

[51 FR 944, Jan. 9, 1986]

§ 68.102 Registration requirement.

Terminal equipment must be registered in accordance with the rules and regulations in subpart C of this part, or connected through registered protective circuitry, which is registered in accordance with the rules and regulations in subpart C of this part.

§ 68.104 Means of connection.

(a) *General.* Any jack installed by the telephone company at, or constituting, the demarcation point shall conform to subpart F of this part. Subject to the requirements of § 68.213, connection of wiring and terminal equipment to the telephone network may be made through a jack conforming to subpart F or by direct attachment to carrier-installed wiring including, but not limited to, splicing, bridging, twisting and soldering. Telephone company-provided ringers may be connected to the network in accordance with the carrier's reasonable and nondiscriminatory standard operating practices. Connection to the network of wiring subject to § 68.215 and terminal equipment used therewith shall be through telephone company-provided jacks conforming to subpart F of this part, in such a manner as to allow for easy and immediate disconnection.

(b) *Data equipment.* Where a customer desires to connect data equipment which has been registered in accordance with § 68.308(b)(4)(i) or (ii), he shall notify the telephone company of each telephone line to which he intends to connect such equipment. The telephone company after determining the attenuation of each such telephone line between the interface and the telephone company central office, will make such connections as are necessary in each standard data jack which it will install, so as to allow the maximum signal power delivered by such data equipment to the telephone company central office to reach but not exceed the maximum allowable signal power permitted at the telephone company central office.

(c) *Tariff description.* As an alternative to description in subpart F of these rules, connections to the telephone network may be made through standard plugs and standard telephone company-provided jacks or equivalent described in nationwide telephone tariffs: *Provided,* That these means of connection otherwise comply with paragraphs (a) and (b) of this section.

[45 FR 20853, Mar. 31, 1980, as amended at 55 FR 28630, July 12, 1990; 61 FR 42392, Aug. 15, 1996; 61 FR 47434, Sept. 9, 1996]

§68.106 Notification to telephone company.

(a) *General.* Customers connecting terminal equipment or protective circuitry to the telephone network shall, upon request of the telephone company, inform the telephone company of the particular line(s) to which such connection is made, the FCC registration number and ringer equivalence number of the registered terminal equipment or registered protective circuitry.

(b) *Systems assembled of combinations of individually-registered terminal equipment and protective circuitry.* Customers connecting such assemblages to the telephone network shall, upon the request of the telephone company, provide to the telephone company the following information:

(1) For each line:

(i) Information required for compatible operation of the equipment with telephone company communications facilities.

(ii) The FCC Registration Numbers for all equipment dedicated to that line.

(iii) The largest Ringer Equivalence to be presented to that line.

(2) A list of FCC Registration Numbers for equipment to be used in the system.

(c) *Systems using other than ''fully-protected'' premises wiring.* Customers who intend to connect premises wiring other than ''fully-protected'' premises wiring to the telephone network shall, in addition to the foregoing, give notice to the telephone company in accordance with §68.215(e).

(d) *AIOD trunk and station number verification.* Customers who intend to install or have installer performed additions to and rearrangements of AIOD functions shall give notice to the telephone company in accordance with §68.222(d).

(e) *OPS.* Customers who intend to connect to OPS facilities shall inform the telephone company of OPS class for which the equipment is registered and connection is desired.

[45 FR 20853, Mar. 31, 1980, as amended at 50 FR 47548, Nov. 19, 1985]

§68.108 Incidence of harm.

Should terminal equipment, inside wiring, plugs and jacks, or protective circuitry cause harm to the telphone network, or, should the carrier reasonably determine that such harm is imminent, the telephone company shall, where practicable, notify the customer that temporary discontinuance of service may be required; however, wherever prior notice is not practicable, the telephone company may temporarily discontinue service forthwith, if such action is reasonable under the circumstances. In case of such temporary discontinuance, the telephone company shall:

(a) Promptly notify the customer of such temporary discontinuance;

(b) Afford the customer the opportunity to correct the situation which gave rise to the temporary discontinuance; and

(c) Inform the customer of his right to bring a complaint to the Commission pursuant to the procedures set forth in subpart E of this part.

[55 FR 28630, July 12, 1990]

§68.110 Compatibility of the telephone network and terminal equipment.

(a) *Availability of interface information.* Technical information concerning interface parameters not specified in this part, including the number of ringers which may be connected to a particular telephone line, which is needed to permit terminal equipment to operate in a manner compatible with telephone company communications facilities, shall be provided by the telephone company upon request.

(b) *Changes in telephone company facilities, equipment, operations or procedures.* The telephone company may make changes in its communications

facilities, equipment, operations or procedures, where such action is reasonably required in the operation of its business and is not inconsistent with the rules and regulations in this part. If such changes can be reasonably expected to render any customer's terminal equipment incompatible with telephone company communications facilities, or require modification or alteration of such terminal equipment, or otherwise materially affect its use or performance, the customer shall be given adequate notice in writing, to allow the customer an opportunity to maintain uninterrupted service.

§ 68.112 Hearing aid-compatibility.

(a) *Coin telephones.* All new and existing coin-operated telephones, whether located on public property or in a semi-public location (*e.g.* drugstore, gas station, private club).

(b) *Emergency use telephones.* Telephones ''provided for emergency use'' include the following:

(1) Telephones, except headsets, in places where a person with a hearing disability might be isolated in an emergency, including, but not limited to, elevators, highways, and tunnels for automobile, railway or subway, and workplace common areas.

NOTE TO PARAGRAPH (b)(1): Examples of workplace common areas include libraries, reception areas and similar locations where employees are reasonably expected to congregate.

(2) Telephones specifically installed to alert emergency authorities, including, but not limited to, police or fire departments or medical assistance personnel.

(3) Telephones, except headsets, in workplace non-common areas. Note: Examples of workplace non-common areas include private enclosed offices, open area individual work stations and mail rooms. Such non-common area telephones are required to be hearing aid compatible, as defined in § 68.316, by January 1, 2000, except for those telephones located in establishments with fewer than fifteen employees; and those telephones purchased between January 1, 1985 through December 31, 1989, which are not required to be hearing aid compatible, as defined in § 68.316, until January 1, 2005.

(i) Telephones, including headsets, made available to an employee with a hearing disability for use by that employee in his or her employment duty, shall, however, be hearing aid compatible, as defined in § 68.316.

(ii) As of January 1, 2000 or January 1, 2005, whichever date is applicable, there shall be a rebuttable presumption that all telephones located in the workplace are hearing aid compatible, as defined in § 68.316. Any person who identifies a telephone as non-hearing aid-compatible, as defined in § 68.316, may rebut this presumption. Such telephone must be replaced within fifteen working days with a hearing aid compatible telephone, as defined in § 68.316, including, as of November 1, 1998, with volume control, as defined in § 68.317.

(iii) Telephones, not including headsets, except those headsets furnished under paragraph (b)(3)(i) of this section, that are purchased, or replaced with newly acquired telephones, must be:

(A) Hearing aid compatible, as defined in § 68.316, after October 23, 1996; and

(B) Including, as of November 1, 1998, with volume control, as defined in § 68.317.

(iv) When a telephone under paragraph (b)(3)(iii) of this section is replaced with a telephone from inventory existing before October 23, 1996, any person may make a bona fide request that such telephone be hearing aid compatible, as defined in § 68.316. If the replacement occurs as of November 1, 1998, the telephone must have volume control, as defined in § 68.317. The telephone shall be provided within fifteen working days.

(v) During the period from October 23, 1996, until the applicable date of January 1, 2000 or January 1, 2005, workplaces of fifteen or more employees also must provide and designate telephones for emergency use by employees with hearing disabilities through one or more of the following means:

(A) By having at least one coin-operated telephone, one common area telephone or one other designated hearing aid compatible telephone within a reasonable and accessible distance for an

individual searching for a telephone from any point in the workplace; or

(B) By providing wireless telephones that meet the definition for hearing aid compatible for wireline telephones, as defined in § 68.316, for use by employees in their employment duty outside common areas and outside the offices of employees with hearing disabilities.

(4) All credit card operated telephones, whether located on public property or in a semipublic location (e.g. drugstore, gas station, private club), unless a hearing aid compatible (as defined in § 68.316) coin-operated telephone providing similar services is nearby and readily available. However, regardless of coin-operated telephone availability, all credit card operated telephones must be made hearing aid-compatible, as defined in § 68.316, when replaced, or by May 1, 1991, which ever comes sooner.

(5) Telephones needed to signal life threatening or emergency situations in confined settings, including but not limited to, rooms in hospitals, residential health care facilities for senior citizens, and convalescent homes:

(i) A telephone that is hearing aid compatible, as defined in § 68.316, is not required until:

(A) November 1, 1997, for establishments with fifty or more beds, unless replaced before that time; and

(B) November 1, 1998, for all other establishments with fewer than fifty beds, unless replaced before that time.

(ii) Telephones that are purchased, or replaced with newly acquired telephones, must be:

(A) Hearing aid compatible, as defined in § 68.116, after October 23, 1996;

(B) Including, as of November 1, 1998, with volume control, as defined in § 68.317.

(iii) Unless a telephone in a confined setting is replaced pursuant to paragraph (b)(5)(ii) of this section, a hearing aid compatible telephone shall not be required if:

(A) A telephone is both purchased and maintained by a resident for use in that resident's room in the establishment; or

(B) The confined setting has an alternative means of signalling life-threatening or emergency situations that is available, working and monitored.

(6) Telephones in hotel and motel guest rooms, and in any other establishment open to the general public for the purpose of overnight accommodation for a fee. Such telephones are required to be hearing aid compatible, as defined in § 68.316, except that, for establishments with eighty or more guest rooms, the telephones are not required to be hearing aid compatible, as defined in § 68.316, until November 1, 1998; and for establishments with fewer than eighty guest rooms, the telephones are not required to be hearing aid compatible, as defined in § 68.316, until November 1, 1999.

(i) Anytime after October 23, 1996, if a hotel or motel room is renovated or newly constructed, or the telephone in a hotel or motel room is replaced or substantially, internally repaired, the telephone in that room must be:

(A) Hearing aid compatible, as defined in § 68.316, after October 23, 1996;

(B) Including, as of November 1, 1998, with volume control, as defined in § 68.317.

(ii) The telephones in at least twenty percent of the guest rooms in a hotel or motel must be hearing aid compatible, as defined in § 68.316, as of April 1, 1997.

(iii) Notwithstanding the requirements of paragraph (b)(6) of this section, hotels and motels which use telephones purchased during the period January 1, 1985 through December 31, 1989 may provide telephones that are hearing aid compatible, as defined in § 68.316, in guest rooms according to the following schedule:

(A) The telephones in at least twenty percent of the guest rooms in a hotel or motel must be hearing aid compatible, as defined in § 68.316, as of April 1, 1997;

(B) The telephones in at least twenty-five percent of the guest rooms in a hotel or motel must be hearing aid compatible, as defined in § 68.316, by November 1, 1999; and

(C) The telephones in one-hundred percent of the guest rooms in a hotel or motel must be hearing aid compatible, as defined in § 68.316, by January 1, 2001 for establishments with eighty or more guest rooms, and by January 1, 2004 for establishments with fewer than eighty guest rooms.

(c) *Telephones frequently needed by the hearing impaired.* Closed circuit telephones, i.e., telephones which cannot directly access the public switched network, such as telephones located in lobbies of hotels or apartment buildings; telephones in stores which are used by patrons to order merchandise; telephones in public transportation terminals which are used to call taxis or to reserve rental automobiles, need not be hearing aid compatible, as defined in § 68.316, until replaced.

[49 FR 1362, Jan. 11, 1984, as amended at 55 FR 28763, July 13, 1990; 57 FR 27183, June 18, 1992; 61 FR 42186, Aug. 14, 1996; 61 FR 42392, Aug. 15, 1996]

EFFECTIVE DATE NOTES: 1. At 61 FR 42186, Aug. 14, 1996, in § 68.112, paragraphs (b)(1), (3), (4), (5) and (c) were revised and (b)(6) was added, effective Oct. 23, 1996. For the convenience of the user, the superseded text is set forth as follows:

§ 68.112 Hearing aid-compatibility.

* * * * *

(b) * * *

(1) Telephones in places where a person with impaired hearing might be isolated in an emergency, including, but not limited to, elevators, automobile, railroad or subway tunnels, highways and all areas of the workplace including common areas (libraries, reception areas and similar locations where employees are reasonably expected to congregate). With respect to the workplace, noncommon area telephones are not required to be hearing aid-compatible until May 1, 1993, for establishments with twenty or more employees, and until May 1, 1994, for all other establishments, except for telephones made available to a hearing impaired employee for use by that employee in his or her employment duty. Such telephones shall be hearing aid-compatible by May 1, 1992.

* * * * *

(3) Telephones needed to signal life-threatening or emergency situations in confined settings, including but not limited to, rooms in hospitals, residential health care facilities for senior citizens, convalescent homes, and prisons. If an alternative means of signalling life-threatening or emergency situations is available, a hearing aid-compatible telephone is not required until May 1, 1993, for establishments with twenty or more employees, and until May 1, 1994, for all other establishments, unless replaced before that time.

(4) All credit card operated telephones, whether located on public property or in a semipublic location (e.g. drugstore, gas station, private club), unless a hearing aid-compatible coin-operated telephone providing similar services is nearby and readily available. However, regardless of coin-operated telephone availability, all credit card operated telephones must be made hearing aid compatible when replaced, or by May 1, 1991, which ever comes sooner.

(5) Until May 1, 1993, for establishments with twenty or more employees, and until May 1, 1994, for all other establishments, telephones in hotel and motel rooms replaced after January 1, 1985, must be hearing aid-compatible unless at least ten percent of the rooms in a hotel or motel are equipped to accommodate a hearing impaired customer. A room is equipped to accommodate a hearing impaired customer if

(i) It contains a permanently installed hearing aid-compatible telephone; or

(ii) It contains a telephone which will accept a plugin hearing aid-compatible handset, which shall be provided to the hearing impaired customer by the hotel or motel; or

(iii) The room contains a jack into which a hearing air-compatible telephone provided to the customer by the hotel or motel may be plugged (i.e., in addition to a permanently installed telephone which is not hearing aid-compatible). If fewer than ten percent of the rooms in a hotel or motel are hearing aid-compatible, when replacing a telephone the hotel or motel must, until the ten percent minimum is reached:

(A) Replace it with a hearing aid-compatible telephone, or

(B) Procure and maintain a plug-in hearing aid-compatible telephone handset which it will provide to a hearing impaired customer upon request at check-in. For establishments with twenty or more employees, all telephones in hotel and motel rooms are required to be hearing aid-compatible by May 1, 1993. For establishments with fewer than twenty employees, all telephones in hotel and motel rooms are required to be hearing aid-compatible by May 1, 1994.

(c) *Telephones frequently needed by the hearing impaired.* Closed circuit telephones, i.e., telephones which cannot directly access the public switched network, such as telephones located in lobbies of hotels or apartment buildings; telephones in stores which are used by patrons to order merchandise; telephones in public transportation terminals which are used to call taxis or to reserve rental automobiles, need not be hearing aid-compatible until replaced.

2. At 61 FR 42392, Aug. 15, 1996, in § 68.112, paragraph (b)(2) was amended by removing the word ''policy'' and adding in its place the word ''police'', effective Nov. 13, 1996.

Subpart C—Registration Procedures

§68.200 Application for equipment registration.

An original and one copy of an application for registration of terminal equipment and protective circuitry shall be submitted on FCC Form 730 to the Federal Communications Commission, Washington, DC 20554 (Applications requiring fees as set forth at part 1, subpart G of this chapter must be filed in accordance with §0.401(b) of the rules). An application for original approval of an equipment type directly connected to the network on May 1, 1976, may be submitted as a short form application (unless the Commission specifically requests the filing of complete information). All other applications shall have all questions answered and include the following information:

(a) Identification, technical description and purpose of the equipment for which registration is sought.

(b) The means, if any, employed to limit signal power into interface.

(c) A description of all circuitry employed in assuring compliance with this part 68 including the following:

(1) Specifications, including voltage or current ratings of all circuit elements whether active or passive, in that part of the equipment or circuitry which ensures compliance with subpart D of this part.

(2) A circuit diagram containing the complete circuit of that part of the equipment or circuitry which ensures compliance with subpart D of this part. If this portion of the device is subject to factory or field adjustment by the applicant or an agent thereof, instructions for these adjustments shall be included. In addition, if the equipment or circuitry is designed to operate from power supplied by electric utility lines, the circuit diagram shall also include that portion of the device connected to such lines, including the power supply to the internal circuitry, and whatever means are employed to isolate such utility lines from the internal circuitry.

(3) If a service manual is submitted, and any of these items are covered therein, it will be sufficient to list the pages in the manual on which the information specified in the item(s) appear.

(d) A statement that the terminal equipment or protective circuitry complies with and will continue to comply with the rules and regulations in subpart D of this part, accompanied by such test results, description of test procedures, analyses, evaluations, quality control standards and quality assurance standards as are necessary to demonstrate that such terminal equipment or protective circuitry complies with and will continue to comply with all the applicable rules and regulations in subpart D of this part. The Common Carrier Bureau will publish a Registration Application Guide referencing acceptable test procedures; but other test methods may be employed provided they are fully described in the application and are found acceptable by the Commission.

(e) A photograph, sample or drawing of the equipment label showing the information to be placed thereon.

(f) Photographs, of size A4 (12.0 cm x 29.7 cm) or 8 x 10 inches (20.3 cm x 25.4 cm) of the equipment of sufficient clarity to reveal equipment construction and layout and labels for controls, with sufficient views of the internal construction to define component placement and chassis assembly. Photographs smaller than A4 (21.0 cm x 29.7 cm) or 8 x 10 inches (20.3 cm x 25.4 cm) will be acceptable if mounted on paper A4 (21.0 cm x 29.7 cm) or 8 x 10 inches (20.3 cm x 25.4 cm) and of sufficient clarity for the purpose. Insofar as these requirements are met by photographs or drawings contained in service manual or instruction manual included with the application, additional photographs are required only to complete the required showing.

(g) If the device covered by the application is designed to operate in conjunction with other equipment, the characteristics of which can affect compliance of the device covered by the application with subpart D of this part, then such other equipment must also be registered. If such other equipment already is registered, then the FCC Registration Number(s) must be supplied.

(h) Electrically transparent adapters, extension cords, line-transfer swiches

and cross-connect panels need not be registered provided they meet the requirements of § 68.304(a) and the temperature-humidity requirements of § 68.302(b). Descriptive installation procedures for cross-connect panels (where used) must be provided in equipment registration applications. Additional requirements include:

(1) An extension cord must consist of a male connector and a female connector and wiring between them which is no longer than 7.6 meters (25 feet).

(2) Transfer switches must be manually operated, not use relays, and be wired in a balanced tip and ring configurations. Switch wiring must be ''fully protected'' wiring, no longer than 7.6 meters (25 feet).

(i) Any application for registration or modification of the registration of a telephone, filed on or after March 1, 1984, shall state whether the handset complies with § 68.316 of these rules (defining hearing aid compatibility), or state that it does not comply with that section. A telephone handset which complies with § 68.316 shall be deemed a ''hearing aid-compatible telephone'' for purposes of § 68.4.

(j) Terminal equipment having the following lead connections to standard jacks or adapters are subject to the following compliance tests:

(1) *Make-busy leads:* The MB and MB1 leads shall be considered telephone connections and comply with the requirements of §§ 68.304 and 68.306 when isolated from tip and ring. When the corresponding telephone line is of the loop-start type the tip and ring leads shall comply with all part 68 rules when the MB and MB1 leads are bridged to the tip and ring connections.

(2) *Continuity leads:* Leakage current limitations shall be met as specified in § 68.304. The design of the terminal equipment shall assure that the open circuit dc voltage to ground shall not exceed 18 volts; the dc current in a short circuit across CY1 and CY2 shall not exceed 10 milliamperes; and any ac voltage to ground appearing on the continuity leads from sources in the terminal equipment shall not exceed 5 volts peak. The leads, CY1 and CY2, shall be treated as telephone connections for the purpose of hazardous voltage limitation tests and are only required to comply with § 68.304, 68.306(a) and (b)(1). Terminal equipment furnished with CY1 and CY2 leads shall comply with the criteria of § 68.308 and 68.314 with a short circuit across the CY1 and CY2 leads.

(3) Specialty adapters need only be evaluated for compliance with §§ 68.304 and 68.310 under the conditions specified in § 68.310. Resistors used for setting signal power levels must meet the requirements of § 68.502(e). Specialty adapters may be labelled, ''FCC Reg. No. XXX''. (The proper number should be included.) The other information required by §§ 68.300 need not be provided.

(4) Data jack programmed resistor leads (PR and PC): *See* § 68.502(e). Leakage current limitations shall be met as specified in § 68.304. PR and PC will be treated as telephone connections for the purpose of hazardous voltage limitation tests and are only required to comply with § 68.306(a) and (b)(1). Equipment furnished with PR and PC leads shall comply with the criteria of §§ 68.308 and 68.314 for all permitted values of the programming resistor specified in § 68.502(e).

(k) Any application for registration of a cordless telephone operating under the provisions of part 15 of this chapter shall be accompanied by a statement indicating that the device contains appropriate provision for protection of the public switched telephone network, pursuant to the requirements in § 15.214 of this chapter.

[41 FR 8048, Feb. 24, 1976, as amended at 42 FR 32244, June 24, 1977; 49 FR 1363, Jan. 11, 1984; 49 FR 48720, Dec. 14, 1984; 51 FR 944, Jan. 9, 1986; 51 FR 12616, Apr. 14, 1986; 52 FR 10231, Mar. 31, 1987; 56 FR 3785, Jan. 31, 1991; 58 FR 44907, Aug. 25, 1993; 61 FR 42392, Aug. 15, 1996]

EFFECTIVE DATE NOTE: At 61 FR 42392, Aug. 15, 1996, in § 68.200, the introductory text was amended by removing the words ''two copies'' and adding in its place ''one copy'' and paragraph (d) was revised, effective Nov. 13, 1996. For the convenience of the user, the superseded text is set forth as follows:

§ 68.200 Application for equipment registration.

* * * * *

(d) A statement that the terminal equipment or protective circuitry complies with and will continue to comply with the appropriate rules and regulations in subpart D of

this part, accompanied by such test results, description of test procedures, analyses, evaluations, quality control standards and quality assurance standards as are necessary to demonstrate that such terminal equipment or protective circuitry complies with and will continue to comply with all the applicable rules and regulations in subpart D of this part. The Office of Engineering and Technology may issue an OET Bulletin describing acceptable test methods; other test methods may be employed provided they are fully described in the application and are found acceptable by the Commission.

* * * * *

§68.202 Public notice.

(a) The Commission will issue public notices of the filing of applications for equipment registrations and the grants thereof. No grant will issue before five days from the date of the public notice of the filing of the application.

(b) The Commission will maintain lists of equipment for which it has granted registration and for which it has revoked registration.

[41 FR 8049, Feb. 24, 1976, as amended at 50 FR 47548, Nov. 19, 1985]

§68.204 Comments and replies.

Comments may be filed as to any application for equipment registration within five days of the date of the public notice of its filing. Replies to such comments may be filed within five days of the filing of such comments. All comments must be served on all parties filing comments. An original and three copies of all comments and replies must be filed.

[50 FR 47548, Nov. 19, 1985]

§68.206 Grant of application.

(a) The Commission will grant an application for equipment registration if it finds from an examination of such application and other matter which it may officially notice, that the equipment will comply with the rules and regulations in subpart D of this part, or that such grant will otherwise serve the public interest.

(b) Grants will be made in writing showing the effective date of the grant and any special condition(s) attaching to the grant.

(c) Equipment registration shall not attach to any equipment, nor shall any equipment registration be deemed effective, until the application has been granted.

§68.208 Dismissal and return of application.

(a) An application which is not filed in accordance with the requirements of this part or which is defective with respect to completeness of answers to questions, execution or other matters of a formal character, may not be accepted for filing by the Commission and may be returned as unacceptable for filing unless accompanied by a fully supported request for waiver.

(b) Any application, upon written request, may be dismissed prior to a determination granting or denying the equipment registration requested.

(c) If an applicant is requested by the Commission to furnish any additional documents, information or equipment not specifically required by this subpart, a failure to comply with the request within the time, if any, specified by the Commission will result in the dismissal of such application.

[40 FR 53023, Nov. 14, 1975, as amended at 41 FR 8049, Feb. 24, 1976; 61 FR 42392, Aug. 15, 1996]

EFFECTIVE DATE NOTE: At 61 FR 42392, Aug. 15, 1996, in §68.208, paragraph (a) was amended by removing the words ''of this part of which'' and adding in its place ''of this part or which'', effective Nov. 13, 1996.

§68.210 Denial of application.

If the Commission is unable to make the findings specified in §68.206 it will deny the application. Notification of the denial will include a statement of the reasons for the denial.

§68.211 Registration revocation procedures.

(a) *Cause for revocation*. The Commission may revoke the Part 68 registration of a registrant:

(1) Who has obtained the equipment registration by misrepresentation;

(2) Whose registered equipment is shown to cause harm to the network;

(3) Who willfully or repeatedly fails to comply with the terms and conditions of its Part 68 registration; or

(4) Who willfully or repeatedly fails to comply with any rule, regulation or order issued by the Commission under the Communications Act of 1934 relating to equipment registration.

(b) *Notice of Intent to Revoke Part 68 Registration*. Before revoking a Part 68 registration under the provisions of this section, the Commission, or the Common Carrier Bureau under delegated authority, will issue a written Notice of Intent to Revoke Part 68 Registration, or Joint Notice of Apparent Liability for Forfeiture and Intent to Revoke Part 68 Registration pursuant to §§ 1.80 and 1.89 of this chapter.

(1) *Contents of the Notice*. The Notice will:

(i) Identify the registration date(s) and registration number(s) of the equipment, and the rule or federal law apparently violated;

(ii) Set forth the nature of the act or omission charged against the registrant, and the facts upon which such charge is based;

(iii) Specify that in the event of revocation, the registrant may not reapply for registration of the same product for a period of six months; and

(iv) Specify that revocation of the registration may be in addition to, or in lieu of, an amount in forfeiture levied pursuant to § 1.80 of this chapter.

(c) *Delivery*. The Notice will be sent via certified mail to the registrant at the address certified in the Part 68 application associated with the registration at issue.

(d) *Response*. The registrant will be given a reasonable period of time (usually 30 days from the date of the Notice) to show, in writing, why its part 68 registration should not be revoked or why the forfeiture penalty should not be imposed or should be reduced.

(e) *Reapplication*. A registrant whose registration has been revoked may not apply for registration of the same product for a period of six months from the date of revocation of the registration.

(f) *Reconsideration or appeal*. A registrant who is issued a revocation of equipment registration and/or forfeiture assessment may request reconsideration or make administrative appeal of the decision pursuant to Part 1 of the Commission's rules—Practice and Procedure, Part 1 of this chapter.

[61 FR 42392, Aug. 15, 1996]

EFFECTIVE DATE NOTE: At 61 FR 42392, Aug. 15, 1996, § 68.211 was added, effective Nov. 13, 1996.

§ 68.212 Assignment of equipment registration.

Commission equipment registration may not be assigned, exchanged or in any other way transferred to another party, without prior written notice to the Commission.

§ 68.213 Installation of other than "fully protected" non-system simple customer premises wiring.

(a) *Scope of this rule*. Provisions of this rule are limited to ''unprotected'' premises wiring used with simple installations of wiring for one and two-line residential and business telephone service. More complex installations of wiring for multiple line services, for use with systems such as PBX and key telephone systems, are controlled by § 68.215 of these rules.

(b) *Wiring authorized*. Unprotected premises wiring may be used to connect units of terminal equipment or protective circuitry to one another, and to carrier-installed facilities if installed in accordance with these rules. The telephone company is not responsible, except pursuant to agreement between it and the customer or undertakings by it, otherwise consistent with Commission requirements, for installation and maintenance of wiring on the subscriber's side of the demarcation point, including any wire or jacks that may have been installed by the carrier. The subscriber and/or premises owner may install wiring on the subscriber's side of the demarcation point, and may remove, reconfigure, and rearrange wiring on that side of the demarcation point including wiring that may have been installed by the carrier. The customer or premises owner may not access carrier wiring and facilities on the carrier's side of the demarcation point. Customers may not access the telephone company-installed protector. All plugs and jacks used in connection with inside wiring shall conform to subpart F of the Commission's rules.

(c) *Material requirements.* Conductors shall have insulation with a 1500 Volt rms breakdown rating. This rating shall be established by covering the jacket or sheath with at least 15 cm (6 in) (measured lineraly on the cable) of conductive foil, and establishing a potential difference between the foil and all of the individual conductors connected together, such potential difference gradually increased over a 30 second time period to 1500 Volts rms, 60 Hertz, then applied continuously for one minute. At no time during this 90 second time interval shall the current between these points exceed 10 milliamperes peak.

(d) *Attestation.* Manufacturers (or distributors or retailers, whichever name appears on the packaging) of non-system telephone premises wire shall attest in a letter to the Commission that the wire conforms with part 68, FCC Rules.

[49 FR 21734, May 23, 1984, as amended at 50 FR 29392, July 19, 1985; 50 FR 47548, Nov. 19, 1985; 51 FR 944, Jan. 9, 1986; 55 FR 28630, July 12, 1990; 58 FR 44907, Aug. 25, 1993]

§68.214 Changes in registered equipment and circuitry.

Changes in registered terminal equipment or registered protective circuitry shall be made as follows:

(a) No change in registered terminal equipment or registered protective circuitry that would result in any change in the information furnished the Commission pursuant to §68.200 may be made, except after grant of a new application made on FCC Form 730.

(b) Changes which do not result in any change in the information furnished the Commission pursuant to §68.200 may be made without express Commission approval. *Provided,* That prior written notification is given the Commission on FCC Form 730.

(c) Where equipment is registered by virtue of incorporation of registered protective circuitry therein, no notification need be given of changes to other than the protective circuitry, its mechanical and electrical connections to the equipment.

(d) Changes in registered terminal equipment or registered protective circuity made pursuant to paragraphs (b) and (c) of this section may be made only by the grantee, or an authorized agent thereof, and the grantee will remain responsible for the performance of such changes.

(e) Operations associated with installing, connecting, reconfiguring or removing (other than final removal) premises wiring to registered terminal equipment or registered protective circuitry are changes in this equipment or circuitry within the meaning of this Section, unless:

(1) The premises wiring involved is ''fully-protected'' premises wiring, or

(2) All such operations are performed in accordance with §68.215.

[42 FR 32244, June 24, 1977, as amended at 43 FR 16499, April 19, 1978]

§68.215 Installation of other than "fully protected" system premises wiring.

(a) *Types of wiring authorized*—(1) *Between equipment entities.* Unprotected premises wiring, and protected premises wiring requiring acceptance testing for imbalance, may be used to connect separately-housed equipment entities to one another.

(2) *Between an equipment entity and the network interface(s).* Fully-protected premises wiring shall be used to connect equipment entities to the telephone network interface unless the local telephone company is unwilling or unable to locate the interface within 7.6 meters (25 feet) of the equipment entity on reasonable request. In any such case, other than fully-protected premises wiring may be used if otherwise in accordance with these rules.

(3) *Hardware protection as part of the telephone company's facilities.* In any case where the carrier chooses to provide (and the customer chooses to accept, except as authorized under paragraph (g) of this section), hardware protection on the network side of the interface(s), the presence of such hardware protection will affect the classification of premises wiring for the purposes of §68.215, as appropriate.

(b) *Installation personnel.* Operations associated with the installation, connection, reconfiguration and removal (other than final removal of the entire premises communications system) of other than fully-protected premises

wiring shall be performed under the supervision and control of a supervisor, as defined in paragraph (c) of this section. The supervisor and installer may be the same person.

(c) *Supervision.* Operations by installation personnel shall be performed under the responsible supervision and control of a person who:

(1) Has had at least six months of on-the-job experience in the installation of telephone terminal equipment or of wiring used with such equipment;

(2) Has been trained by the registrant of the equipment to which the wiring is to be connected in the proper performance of any operations by installation personnel which could affect that equipment's continued compliance with these rules;

(3) Has received written authority from the registrant to assure that the operations by installation personnel will be performed in such a manner as to comply with these rules.

(4) Or, in lieu of paragraphs (c)(1) through (3) of this section, is a licensed professional engineer in the jurisdiction in which the installation is performed.

(d) *Workmanship and material requirements*—(1) *General.* Wiring shall be installed so as to assure that there is adequate insulation of telephone wiring from commercial power wiring and grounded surfaces. Wiring is required to be sheathed in an insulating jacket in addition to the insulation enclosing individual conductors (see below) unless located in an equipment enclosure or in an equipment room with restricted access; it shall be assured that this physical and electrical protection is not damaged or abraded during placement of the wiring. Any intentional removal of wiring insulation (or a sheath) for connections or splices shall be accomplished by removing the *minimum* amount of insulation necessary to make the connection or splice, and insulation equivalent to that provided by the wire and its sheath shall be suitably restored, either by placement of the splices or connections in an appropriate enclosure, or equipment rooms with restricted access, or by using adequately-insulated connectors or splicing means.

(2) *Wire.* Insulated conductors shall have a jacket or sheath with a 1500 volt rms minimum breakdown rating, except when located in an equipment enclosure or an equipment room with restricted access. This rating shall be established by covering the jacket or sheath with at least 15 cm (6 in) (measured linearly on the cable) of conductive foil, and establishing a potential difference between the foil and all of the individual conductors connected together, such potential difference gradually increased over a 30 second time period to 1500 volts rms, 60 Hertz, then applied continuously for one minute. At no time during this 90 second time interval shall the current between these points exceed 10 milliamperes peak.

NOTE: This requirement is patterned after § 68.304.

(3) *Places where the jacket or sheath has been removed.* Any point where the jacket or sheath has been removed (or is not required) shall be accessible for inspection. If such points are concealed, they shall be accessible without disturbing permanent building finish (e.g. by removing a cover).

(4) *Building and electrical codes.* All building and electrical codes applicable in the jurisdiction to telephone wiring shall be complied with. If there are no such codes applicable to telephone wiring, Article 800 of the 1978 National Electrical Code, entitled Communications Systems, and other sections of that Code incorporated therein by reference shall be complied with.

(5) *Limitations on electrical signals.* Only signal sources which emanate from the local telephone company central office, or which are generated in equipment at the customer's premises and are ''non-hazardous voltage sources'' (see § 68.306(b)(4)) may be routed in premises telephone wiring, except for voltages for network control signaling and supervision which are consistent with standards employed by the local telephone company. Current on individual wiring conductors shall be limited to values which do not cause an excessive temperature rise, with due regard to insulation materials and ambient temperatures. The following table assumes a 45° C temperature rise

for wire sizes 22 AWG or larger, and a 40° C rise for wire sizes smaller than 22 AWG, for poly-vinyl chloride insulating materials, and should be regarded as establishing *maximum* values to be derated accordingly in specific installations where ambient temperatures are in excess of 25° C:

MAXIMUM CONTINUOUS CURRENT CAPACITY OF PVC INSULATED COPPER WIRE, CONFINED

Wire size, AWG	Circular mils	Maximum current, amperes
32	63.2	0.32
30	100.5	0.52
28	159.8	0.83
26	254.1	1.3
24	404.0	2.1
22	642.4	5.0
20	1022	7.5
18	1624	10

NOTE: The total current in all conductors of multiple conductor cables may not exceed 20% of the sum of the individual ratings of all such conductors.

(6) *Physical protection.* In addition to the general requirements that wiring insulation be adequate and not damaged during placement of the wiring, wiring shall be protected from adverse effects of weather and the environment in which it is used. Where wiring is attached to building finish surfaces (surface wiring), it shall be suitably supported by means which do not affect the integrity of the wiring insulation.

(e) *Documentation requirements.* A notarized affidavit and one copy thereof shall be prepared by the installation supervisor in advance of each operation associated with the installation, connection, reconfiguration and removal of other than fully-protected premises wiring (except when accomplished functionally using a cross-connect panel), except when involved with removal of the entire premises communications system using such wiring. This affidavit and its copy shall contain the following information:

(1) The responsible supervisor's full name, business address and business telephone number.

(2) The name of the registrant(s) (or manufacturer(s), if grandfathered equipment is involved) of any equipment to be used electrically between the wiring and the telephone network interface, which does not contain inherent protection against hazardous voltages and longitudinal imbalance.

(3) A statement as to whether the supervisor complies with § 68.215(c). Training and authority under § 68.215(c)(2)–(3) is required from the registrant (or manufacturer, if grandfathered equipment is involved) of the first piece of equipment electrically connected to the telephone network interface, other than passive equipments such as extensions, cross-connect panels, or adapters. In general, this would be the registrant (or manufacturer) of a system's common equipment.

(4) The date(s) when placement and connection of the wiring will take place.

(5) The business affiliation of the installation personnel.

(6) Identification of specific national and local codes which will be adhered to.

(7) The manufacturer(s); a brief description of the wire which will be used (model number or type); its conformance with recognized standards for wire if any (*e.g.*, Underwriters Laboratories listing, Rural Electrification Administration listing, ''KS-'' specification, etc.); and a general description of the attachment of the wiring to the structure (*e.g.*, run in conduit or ducts exclusively devoted to telephone wiring, ''fished'' through walls, surface attachment, etc.).

(8) The date when acceptance testing for imbalance will take place.

(9) The supervisor's signature.

The notarized original shall be submitted to the local telephone company at least ten calendar days in advance of the placement and connection of the wiring. This time period may be changed by agreement of the telephone company and the supervisor. The copy shall be maintained at the premises, available for inspection, so long as the wiring is used for telephone service.

(f) *Acceptance testing for imbalance.* Each telephone network interface that is connected directly or indirectly to other than fully-protected premises wiring shall be subjected to the acceptance test procedures specified in this section whenever an operation associated with the installation, connection, reconfiguration or removal of this wiring (other than final removal) has been performed.

(1) *Test procedure for two-way or outgoing lines or loops.* A telephone instrument may be associated directly or indirectly with the line or loop to perform this test if one is not ordinarily available to it:

(i) Lift the handset of the telephone instrument to create the off-hook state on the line or loop under test.

(ii) Listen for noise. Confirm that there is neither audible hum nor excessive noise.

(iii) Listen for dial tone. Confirm that dial tone is present.

(iv) Break dial tone by dialing a digit. Confirm that dial tone is broken as a result of dialing.

(v) With dial tone broken, listen for audible hum or excessive noise. Confirm that there is neither audible hum nor excessive noise.

(2) *Test procedure for incoming-only (non-originating) lines or loops.* A telephone instrument may be associated directly or indirectly with the line or loop to perform this test if one is not ordinarily available to it:

(i) Terminate the line or loop under test in a telephone instrument in the on-hook state.

(ii) Dial the number of the line or loop under test from another station, blocking as necessary other lines or loops to cause the line or loop under test to be reached.

(iii) On receipt of ringing on the line or loop under test, lift the handset of the telephone instrument to create the off-hook state on that line or loop.

(iv) Listen for audible hum or excessive noise. Confirm that there is neither audible hum nor excessive noise.

(3) *Failure of acceptance test procedures.* Absence of dial tone before dialing, inability to break dial tone, or presence of audible hum or excessive noise (or any combination of these conditions) during test of two-way or outgoing lines or loops indicates failure. Inability to receive ringing, inability to break ringing by going off-hook, or presence of audible hum or excessive noise (or any combination of these conditions) during test of incoming-only lines or loops indicates failure. Upon any such failure, the failing equipment or portion of the premises communications system shall be disconnected from the network interface, and may not be reconnected until the cause of the failure has been isolated or removed. Any previously tested lines or loops shall be retested if they were in any way involved in the isolation and removal of the cause of the failure.

(4) *Monitoring or participation in acceptance testing by the local telephone company.* The local telephone company may monitor or participate in the acceptance testing required under this section, in accordance with § 68.215(g) of this part, from its central office test desk or otherwise.

(g) *Extraordinary procedures.* The local telephone company is hereby authorized to limit the subscriber's right of connecting FCC-registered terminal equipment or protective circuitry with other than fully-protected premises wiring, but solely in accordance with this subsection and § 68.108 of these rules.

(1) *Conditions which may invoke these procedures.* The extraordinary procedures authorized herein may only be invoked where one or more of the following conditions is present:

(i) Information provided in the supervisor's affidavit gives reason to believe that a violation of part 68 of the FCC's rules is likely.

(ii) A failure has occurred during acceptance testing for imbalance.

(iii) Harm has occurred, and there is reason to believe that this harm was a result of wiring operations performed under this section.

The extraordinary procedures authorized in the following sub-sections shall not be used so as to discriminate between installations by local telephone company personnel and installations by others. In general, this would require that any charges for these procedures be levied in accordance with, or analgous to, the ''maintenance of service'' tariff provisions: If the installation proves satisfactory, no charge should be levied.

(2) *Monitoring or participation in acceptance testing for imbalance.* Notwithstanding the previous sub-section, the local telephone company may monitor or particapate in acceptance testing for imbalance at the time of the initial installation of wiring in the absence of the conditions listed therein; at any other time, one or more of the listed

conditions shall be present. Such monitoring or participation in acceptance testing should be performed from the central office test desk where possible to minimize costs.

(3) *Inspection.* Subject to paragraph (g)(1) of this section, the local telephone company may inspect wiring installed pursuant to this section, and all of the splicing and connection points required to be accessible by § 68.215(d)(3) to determine compliance with this section. The user or installation supervisor shall either authorize the telephone company to render the splicing and inspection points visible (e.g. by removing covers), or perform this action prior to the inspection. To minimize disruption of the premises communications system, the right of inspecting is limited as follows:

(i) During initial installation of wiring:

The telephone company may require withdrawal of up to 5 percent (measured linearly) of wiring run concealed in ducts, conduit or wall spaces, to determine conformance of the wiring to the information furnished in the affidavit.

(ii) After failure of acceptance testing or after harm has resulted from installed wiring:

The telephone company may require withdrawal of all wiring run concealed in ducts, conduit or wall spaces which reasonably could have caused the failure of harm, to determine conformance of the wiring to the information furnished in the affidavit.

In the course of any such inspection, the telephone company shall have the right to inspect documentation required to be maintained at the premises under § 68.215(e).

(4) *Requiring the use of protective apparatus.* In the event that any of the conditions listed in paragraph (g)(1) of this section, arises, and is not permanently remedied within a reasonable time period, the telephone company may require the use of protective apparatus which either protects solely against hazardous voltages, or which protects both against hazardous voltages and imbalance. Such apparatus may be furnished either by the telephone company or by the customer. This right is in addition to the telephone company's rights under § 68.108.

(5) *Notice of the right to bring a complaint.* In any case where the telephone company invokes the extraordinary procedures of § 68.215(g), it shall afford the customer the opportunity to correct the situation which gave rise to invoking these procedures, and inform the customer of the right to bring a complaint to the Commission pursuant to the procedures set forth in subpart E of this part. On complaint, the Commission reserves the right to perform any of the inspections authorized under this section, and to require the performance of acceptance tests.

(h) *Limitations on the foregoing if protected wiring requiring acceptance testing is used.* If protected wiring is used which required acceptance testing, the requirements in the foregoing paragraphs of § 68.215 are hereby limited, as follows:

(1) *Supervision.* Section 68.215(c)(2)–(3) are hereby waived. The supervisor is only required to have had at least six months of on-the-job experience in the installation of telephone terminal equipment or of wiring used with such equipment.

(2) *Extraordinary procedures.* Section 68.215(g)(3) is hereby limited to allow for inspection of exposed wiring and connection and splicing points, but not for requiring the withdrawal of wiring from wiring run concealed in ducts, conduit or wall spaces unless actual harm has occurred, or a failure of acceptance testing has not been corrected within a reasonable time. In addition, § 68.215(g)(4) is hereby waived.

[43 FR 16499, Apr. 19, 1978, as amended at 44 FR 7958, Feb. 8, 1979; 47 FR 37896, Aug. 27, 1982; 49 FR 21735, May 23, 1984; 58 FR 44907, Aug. 25, 1993]

§ 68.216 Repair of registered terminal equipment and registered protective circuitry.

Repair of registered terminal equipment and registered protective circuitry shall be accomplished only by the manufacturer or assembler thereof or by their authorized agent; however, routine repairs may be performed by a user, in accordance with the instruction manual if the applicant certifies

that such routine repairs will not result in noncompliance with the rules and regulations in subpart D of this part.

§ 68.218 Responsibility of grantee of equipment registration.

(a) In applying for a grant of an equipment registration, the grantee warrants that each unit of equipment marketed under such grant will comply with all the applicable rules and regulations in subpart D of this part.

(b) The grantee or its agent shall provide the user of the registered equipment the following:

(1) Instructions concerning installation, operational and repair procedures, where applicable.

(2) Instructions that registered terminal equipment or protective circuitry may not be used with party lines or coin lines.

(3) Instructions that when trouble is experienced the customer shall disconnect the registered equipment from the telephone line to determine if the registered equipment is malfunctioning and that if the registered equipment is malfunctioning, the use of such equipment shall be discontinued until the problem has been corrected.

(4) Instructions that the user must give notice to the telephone company in accordance with the requirements of § 68.106, and instructions specifying the Universal Service Order Code(s), other than RJ11 (see § 68.502), of means of connection of the equipment which may be required to be ordered from the telephone company if not already installed.

(5) For a telephone which is not hearing aid-compatible, as defined in § 68.316 of these rules:

(i) Notice that FCC rules prohibit the use of that handset in certain locations; and

(ii) A list of such locations (see § 68.112).

(6) For registered devices used in connection with 1.544 Mbps digital services, instructions that the user must notify the telephone company prior to disconnection of such registered devices.

A telephone company which provides and installs the registered equipment need only provide the user with the information required in paragraphs (b)(1), (3) and (5) of this section.

(c) When registration is revoked for any item of equipment, the grantee is responsible to take all reasonable steps to ensure that purchasers and users of such equipment are notified of such revocation and are notified to discontinue use of such equipment.

(d) The grantee or its agent shall assure that any registered equipment or circuitry which is offered to a user shall be equipped with standard means of connection to the telephone network specified in subpart F of this part.

[41 FR 8049, Feb. 24, 1976, as amended at 42 FR 32244, June 24, 1977; 49 FR 1363, Jan. 11, 1984; 50 FR 48209, Nov. 22, 1985]

§ 68.220 Cross reference.

Applications for registration of terminal equipment or protective circuitry shall, in addition to the requirements of this subpart, comply with the provisions of subpart L of part 2 of this chapter.

[42 FR 32244, June 24, 1977]

§ 68.222 AIOD trunk and station number verification.

(a) *Verification requirements*—(1) *General.* The proper identification of 4-digit PBX-central office trunk numbers and PBX station numbers for purposes of Automatic Identified Outward Dialing (AIOD) shall be verified as a part of initial installation and subsequent installer performed additions to and rearrangements of AIOD functions.

(2) *Trunk numbers.* A 4-digit trunk number identified for each PBX-central office trunk, when seized, shall be the same as the 4-digit trunk number assigned by the telephone company at the PBX-central office trunk interface.

(3) *Station numbers.* The 4-digit station number identified for each station, incoming tie trunk, and the attendant when connected to a PBX-central office trunk shall be verified to:

(i) Be in the group of station numbers assigned by the telephone company and,

(ii) Be the same as the number assigned to or intended to correspond uniquely to the station, tie trunk, or attendant.

(b) *Verification personnel.* Operations associated with the verification of AIOD trunk and station number assignments shall be performed under the supervision and control of a supervisor, as defined in paragraph (c) of this section. The supervisor and installer may be the same person.

(c) *Supervision.* Operations by installation personnel shall be performed under the responsible supervision and control of a person who:

(1) Has at least six months of on-the-job experience in the installation of telephone terminal equipment;

(2) Has been trained by the registrant in the operation of the AIOD feature and in the performance of operations needed to verify proper identification procedures and results.

(3) Or, in lieu of paragraphs (c)(1) and (c)(2) of this section, is a licensed professional engineer in the jurisdiction in which the installation is performed.

(d) *Verification procedure.* The installation supervisor shall notify the telephone company that the required verification tests have been performed. Such notification need not be made in writing. Such notification shall include the following information:

(1) The responsible supervisor's full name, business address and business telephone number; and

(2) The date when AIOD service involving the trunk and station numbers verified will start, the date when the verification test took place, and a list of the trunk and station numbers actually assigned.

[45 FR 20853, Mar. 31, 1980]

§68.224 Notice of non-hearing aid compatibility.

Every non-hearing aid compatible telephone offered for sale to the public on or after August 17, 1989, whether previously-registered, newly registered or refurbished shall:

(a) Contain in a conspicuous location on the surface of its packaging a statement that the telephone is not hearing aid compatible, as is defined in §§68.4(a)(3) and 68.316, or if offered for sale without a surrounding package, shall be affixed with a written statement that the telephone is not hearing aid-compatible, as defined in §§68.4(a)(3) and 68.316; and

(b) Be accompanied by instructions in accordance with §68.218(b)(5) of the rules.

[54 FR 21431, May 18, 1989, as amended at 61 FR 42187, Aug. 14, 1996]

EFFECTIVE DATE NOTE: At 61 FR 42187, Aug. 14, 1996, in §68.224, paragraph (a) was revised, effective Oct. 23, 1996. For the convenience of the user, the superseded text is set forth as follows:

§68.224 Notice of non-hearing aid compatibility.

* * * * *

(a) Contain in a conspicuous location on the surface of its packaging a statement that the telephone is not hearing aid-compatible, as is defined in §68.4(a)(3) of these rules, or if offered for sale without a surrounding package, shall be affixed with a written statement that the telephone is not hearing aid-compatible, as defined in §68.4(a)(3) of these rules; and

* * * * *

§68.226 Registration of digital systems components.

Registered terminal equipment for connection to digital services may be registered as a component of a terminal equipment system. Such terminal equipment shall be connected to digital services only in a manner consistent with the registration code contained as part of the FCC registration number. Such codes shall be determined and assigned in the administration of the registration program.

[50 FR 48209, Nov. 22, 1985]

Subpart D—Conditions for Registration

AUTHORITY: Secs. 4, 5, 303, 48 Stat., as amended, 1066, 1068, 1082 (47 U.S.C. 154, 155, 303).

SOURCE: 45 FR 20853, Mar. 31, 1980, unless otherwise noted.

§68.300 Labelling requirements.

(a) Registered terminal equipment and registered protective circuitry shall have prominently displayed on an outside surface the following information in the following format:

Complies With Part 68, FCC Rules
FCC Registration Number _____

Ringer Equivalence

(b) Registered terminal equipment and registered protective circuitry shall also have the following identifying information permanently affixed thereto:

(1) Grantee's name

(2) Model number, as specified in the registration application

(3) Serial number or date of manufacture.

(4) Country of origin of the equipment: Made in ———. Required if the equipment is not manufactured in the United States. Country of origin shall be determined in accordance with 19 U.S.C. 1304 and regulations promulgated thereunder.

(5) As used herein, ''permanently affixed'' means that the required nameplate data is etched, engraved, stamped, indelibly printed or otherwise permanently marked. Alternatively, the required information may be permanently marked on a nameplate of metal, plastic, or other material fastened to the enclosure by welding, riveting, etc., or with a permanent adhesive. Such a nameplate must be able to last the expected lifetime of the equipment in the environment in which the equipment will be operated and must not be readily detachable.

(c) As of April 1, 1997, all registered telephones, including cordless telephones, as defined in § 15.3(j) of this chapter, manufactured in the United States (other than for export) or imported for use in the United States, that are hearing aid compatible, as defined in § 68.316, shall have the letters ''HAC'' permanently affixed thereto. ''Permanently affixed'' shall be defined as in § 68.300(b)(5). Telephones used with public mobile services or private radio services, and secure telephones, as defined by § 68.3, are exempt from this requirement.

EDITORIAL NOTE: At 61 FR 42392, Aug. 15, 1996, the following paragraph (c) was added to § 68.300, effective Nov. 13, 1996.

(c) When the device is so small or for such use that it is not practical to place the labelling information specified in paragraphs (a) and (b) of this section, the information required by these paragraphs shall be placed in a prominent place in user instructions. The FCC Registration Number and the device Model Number, however, must be displayed on the device. All lettering on the label must be discernible without magnification.

[45 FR 20853, Mar. 31, 1980, as amended at 51 FR 944, Jan. 9, 1986; 61 FR 42187, Aug. 14, 1996; 61 FR 42392, Aug. 15, 1996]

EFFECTIVE DATE NOTE: At 61 FR 42187, Aug. 14, 1996, in § 68.300, paragraph (c) was added, effective Oct. 23, 1996.

§ 68.302 Environment simulation.

Registered terminal equipment and registered protective circuitry shall comply with all the criteria contained in the rules and regulations in this subpart, both prior to and after the application of each of the mechanical and electrical stresses specified in this section, not withstanding that certain of these stresses may result in partial or total destruction of equipment.

(a) *Vibration*. The equipment shall be subjected to vibration while in the condition that it is normally shipped or transported. That is, during the following vibration test the equipment shall be vibrated while packaged if shipped packaged, or the equipment shall be vibrated while unpackaged if shipped unpackaged. The following sinusoidal vibration should be applied once in each of three orthogonal directions, however, for large equipments, the unit should rest on the base or side on which it is normally shipped: One sweep at a level of 0.5g peak from 5 to 100 Hz, and one sweep at a level of 1.5g peak from 100 to 500 Hz. The 5 to 100 Hz sweep should be conducted at a sweep rate of 0.1 octave/min. (approximately 45 minutes) and the 100 to 500 Hz sweep at a rate of 0.25 octave/min. (approximately 10 minutes).

(b) *Temperature and humidity*. Cycling at any convenient rate through the following temperature and humidity conditions three times: 30 minutes at 65° C (150° F) and 15 percent relative humidity, followed by 30 minutes at 32° C (90° F) and 90 percent relative humidity, followed by 30 minutes at −40° C (−40° F) and any convenient humidity.

(c) *Shock*. (1) Registered Terminal Equipment and Registered Protective Circuitry Equipment Unpackaged:

Hand-Held Items Normally Used at Head Height:

18 random drops from a height of 150 cm (60 in) onto concrete covered with 3 mm (⅛ in) asphalt tile or similar surface.

Normally Customer Carried Equipment:

6 random drops from a height of 75 cm (30 in) onto concrete covered with 3 mm (⅛ in) asphalt tile or similar surface.

Equipment Not Normally Customer Carried:

These tests are made onto concrete covered with 3 mm (⅛ in) asphalt tile or similar surface.

0–10 kg (0–20 lbs): One 15 cm (6 in) face drop on each normal or designated rest face, one 7 cm (3 in) drop on all other faces, and one 7 cm (3 in) corner drop on each corner.

10–20 kg (20–50 lbs): One 10 cm (4 in) face drop on each normal or designated rest face, one 5 cm (2 in) face drop on all other faces, and one 5 cm (2 in) corner drop on each corner.

20–50 kg (50–100 lbs): One 5 cm (2 in) face drop on each normal or designated rest face. One edgewise drop and one cornerwise drop from a height of 5 cm (2 in) on each edge and corner adjacent to the rest face.

50–500 kg (100–1000 lbs): One 2 cm (1 in) face drop on each normal or designated rest face. One edgewise drop and one cornerwise drop from a height of 2 cm (1 in) on each edge and corner adjacent to the rest face.

Over 500 kg (1,000 lbs): One 2 cm (1 in) face drop on each normal or designated rest face. One edgewise drop from a height of 2 cm (1 in) on each edge adjacent to this rest face.

(2) The drop tests specified in the mechanical shock conditioning stresses shall be performed as follows:

FACE DROP—The unit should be dropped such that the face to be struck is approximately parallel to the impact surface.

CORNER DROP—The unit should be dropped such that upon impact a line from the struck corner to the center of gravity of the packaged equipment is approximately perpendicular to the impact surface.

EDGEWISE DROP—The unit should be positioned on a flat test surface. One edge of the rest face should be supported with a block so that the rest face makes an angle of 20° with the horizontal. The opposite edge should be lifted the designated height above the test surface and dropped.

CORNERWISE DROP—The unit should be positioned on a flat test surface. One corner of the test face should be supported with a block so that the rest face makes an angle of 20° with the horizontal. The opposite corner should be lifted the designated height above the test surface and dropped.

RANDOM DROP—The unit should be positioned prior to release to ensure as nearly as possible that for every six drops there is one impact on each of the six major surfaces and that the surface to be struck is approximately parallel to the impact surface.

(d) *Metallic voltage surge.* Two 800-volt peak surges of a metallic voltage (one of each polarity) having a 10-microsecond *maximum* rise time to crest and a 560-microsecond *minimum* decay time to half crest applied between (1) tip and ring of a 2-wire connection; (2) between tip and ring, and tip 1 and ring 1 of a 4-wire connection; (3) between tip and tip 1 (with tip and ring tied together and tip 1 and ring 1 tied together) of a 4-wire connection which uses simplexed pairs for signaling; and (4) any other pair of connections on which lightning surges may occur (with one of the connections of the pair under test grounded) with the equipment in each of the following states:

(i) Any operational state which can affect compliance with the requirements of part 68;

(ii) Any state in which the equipment might be connected to the telephone network and from which it is capable of transferring to an operational state by an automatic or manual action required for proper use of the equipment and provided that any such state can affect compliance with the requirements of part 68; and

(iii) Any state in which the equipment might be connected to the telephone network through an automatic or manual action under all reasonably foreseeable possibilities of disconnection of connections of such equipment with primary commercial power sources (including possible loss of equipment grounding through disconnection of a third-wire ground connection contained in a primary power source plug).

All other equipment leads (telephone connections, auxiliary leads, and terminals for connection to nonregistered equipment) not being surged or connected to those being surged should be terminated in a manner which is no less severe than that which occur in normal use and affect compliance with subpart D. Also, equipment states which cannot be achieved by normal means of power shall be achieved artificially by appropriate means, if necessary to comply with the above requirements. The peak current drawn

from the surge generator must not be limited to less than 100 amperes by the capabilities of the surge generator except for the simplexed arrangement in case (3), which must not be limited to less than 200 amperes.

(e) *Longitudinal voltage surge.* With registered terminal equipment in each of the following states: first, any operational state which can affect compliance with the requirements of part 68, second, any state in which the equipment might be connected to the telephone network and from which it is capable of transferring to an operational state by an automatic or manual action required for proper use of the equipment and provided that each state can affect compliance with the requirements of part 68 and third, any state in which the equipment might be connected to the telephone network through an automatic or manual action under all reasonably foreseeable possibilities of disconnection of connections of such equipment with primary commercial power sources (including possible loss of equipment grounding through disconnection of a third-wire ground connection contained in a primary power source plug):

(1) Two 1500 volt peak surges (one of each polarity) having a 10 microsecond *maximum* rise time to crest and a 160 microsecond *minimum* decay time to half crest applied separately between each of the following leads individually and (i) and (ii) below, and where available, also between all of the following leads tied together and (i) and (ii) below: Tip, ring, tip 1, ring 1, M (only for registered terminal equipment located on the ''A'' side of a Type I E&M interface).

(i) Earth ground; and

(ii) All leads on the registered equipment intended for connection to non-registered equipment when these leads are connected together.

The peak current drawn from the surge generator must not be limited to less than 200 amperes by the capabilities of the surge generator.

(2) Two 1500 volt peak surges (one of each polarity) having a 10 microsecond *maximum* rise time to crest and a 160 microsecond *minimum* decay time to half crest applied between pairs of connections other than tip and ring on which lightning surges may occur, connected together, and individually to (i) and (ii) below:

(i) Earth ground; and

(ii) All leads on the registered equipment intended for connection to non-registered equipment when these leads are tied together.

The peak current drawn from the surge generator shall not be limited to less than 200 amperes by the capabilities of the surge generator.

(3) Six 2500 volt peak surges (three of each polarity) having a 2 microsecond *maximum* rise time to crest and a 10 microsecond *minimum* decay time to half crest applied between the phase and neutral terminals of the ac power line. The peak current drawn from the surge generator must not be limited to less than 1000 amperes by the capabilities of the surge generator.

All other equipment leads (telephone connections, auxiliary leads, and terminals for connection to non-registered equipment) not being surged or connected to those being surged should be terminated in a manner which is no less severe than that which would occur in normal use and affect compliance with subpart D. Also, equipment states which cannot be achieved by normal means of power shall be achieved artificially by appropriate means, if necessary to comply with the above requirements.

(f) *Failure modes resulting from the application of metallic and longitudinal surges.* Registered terminal equipment and registered protective circuitry are permitted to reach a failure-mode state in violation of longitudinal balance requirements of § 68.310, and for terminal equipment connected to Local Area Data Channels a failure-mode state in violation of the longitudinal signal power requirements of § 68.308, after application of the electrical surges specified in paragraphs (d) and (e) herein, provided that:

(1) Such failure results from an intentional, designed failure mode which has the effect of connecting telephone or auxiliary connections with earth ground; and,

(2) If such a failure-mode state is reached, the equipment is designed in such a manner that it would become substantially and noticeably unusable

by the user, or an indication is given to the user (e.g., an alarm), in order that such equipment can be immediately disconnected or repaired.

NOTE: The objective of this subsection is to allow for safety circuitry which diverts lightning-like transients to earth ground, but which may continue to maintain the earth ground connections after the transients have ceased. Such a failure-mode has the potential for causing interference resulting from longitudinal imbalance, and therefore designs must be adopted which will cause the equipment either to be disconnected or repaired rapidly after such a state is reached, should it occur in service. This subsection does not apply to tie trunk interface leads.

[45 FR 20853, Mar. 31, 1980, as amended at 50 FR 47549, Nov. 19, 1985; 51 FR 944, Jan. 9, 1986; 51 FR 16689, May 6, 1986; 58 FR 44907, Aug. 25, 1993]

§68.304 Leakage current limitations.

Registered terminal equipment and registered protective circuitry shall assure that, if a voltage source is connected to the combinations listed in the table below, of the following points on such equipment:

(a) All telephone connections,

(b) All power connections,

(c) All possible combinations of exposed conductive surfaces on the exterior of such equipment or circuitry excluding terminals for connection to other terminal equipment,

(d) All terminals for connection to nonregistered equipment,

(e) Points having a conducting path to the secondaries of any power supply,

(f) All auxiliary lead terminals, and

(g) All E&M lead terminals,

(h) All PR, PC, CY1 and CY2 leads,

and is gradually increased, from zero to the values listed in the table below, over a thirty second time period, then applied continuously for one minute, the current in the mesh formed by the voltage source and these points shall not exceed 10 milliamperes peak at any time during this 90 second time interval.

VOLTAGE APPLIED FOR VARIOUS COMBINATIONS OF ELECTRICAL CONNECTIONS

Voltage sources connected between	Value*
(a) and (c) note (5)	1000
(a) and (d) note (5)	1000
(a) and (f) note (5)	1000

VOLTAGE APPLIED FOR VARIOUS COMBINATIONS OF ELECTRICAL CONNECTIONS—Continued

Voltage sources connected between	Value*
(a) and (g) note (5)	1000
(a) and (h) note (6)	1000
(b) and (c)	1500
(b) and (d)	1500
(b) and (e)	1500
(b) and (h)	1500
(c) and (f)	1000
(c) and (g)	1000
(d) and (f)	1000
(d) and (g)	1000
(f) and (h)	1000

*Value to which test voltage is gradually increased, rms, 60 Hertz.

NOTES: (1) If, in any operational state, one of the telephone connections, auxiliary leads or E&M leads has an intentional conducting path to earth ground, that lead may be excluded from the leakage current test in that operational state. Connections excluded for this reason must comply with the requirements of §68.306(c) in addition to the other applicable rules. However, leakage current tests between telephone connections and auxiliary leads, and between telephone connections and E&M leads are required unless both points have intentional conducting paths to earth ground.

(2) Terminal port connections to registered protective circuitry shall be treated as point (d) leads for the purposes of leakage current limitation.

(3) Leakage current limitations shall be met between each of the point (d) and point (f) leads and all pairs of tip and ring telephone connections. (Testing all pairs may be done by a sequence of appropriate combinations of pairs.)

(4) Equipment states which cannot be achieved by normal means of power shall be achieved artifically by appropriate means, if necessary to comply with the requirements of this section.

(5) For multi-unit equipment interconnected by cables, which is evaluated and registered as an interconnected combination or assembly, the specified 10 milliamperes peak maximum leakage current limitation, other than between power connection points and other points, may be increased as described here to accommodate cable capacitance. The leakage current limitation may be increased to (10N+0.13L) milliamperes peak where L is the length of interconnecting cable in the leakage path in meters and N is the number of equipment units which the combination or assembly will place in parallel across a telephone connection. However, all combinations of electrical connections requiring the increased limitation and involving point (c) (exposed conductive surfaces) surfaces must comply with the requirements of §68.306(c) in addition to other applicable rules.

(6) Leakage current limitations shall be met between each of the point (h) leads and all pairs of tip and ring telephone connections.

[45 FR 20853, Mar. 31, 1980, as amended at 51 FR 944, Jan. 9, 1986; 58 FR 44907, Aug. 25, 1993]

§ 68.306 Hazardous voltage limitations.

(a) *General.* Under no condition of failure of registered terminal equipment or registered protective circuitry, or of equipment connected thereto, which can be conceived to occur in the handling, operation or repair of such equipment or circuitry, shall the open circuit voltage on telephone connections exceed 70 volts peak for more than one second, except for voltages for network control signaling and supervision, which, in any case, should be consistent with standards employed by the telephone companies.

(1) Registered terminal equipment shall assure that at the MR channel interface, no continuous ac or dc voltages appear across the tip (MR) and ring (MR) leads, from the tip (MR) lead to PBX ground, or from the ring (MR) lead to PBX ground.

(2) Registered terminal equipment shall assure that during normal operation, at an AIOD data channel interface, (i) no significant ac voltage to ground other than for data transmission appears on the tip (AI) and ring (AI) leads; (ii) no open circuit dc voltage to ground appears on the tip (AI) and ring (AI) leads other than in the range from 0 to −56.5 volts.

(3) Registered terminal equipment shall also assure that at either the MR channel interface or an AIOD data channel interface, voltage transients appearing on either the tip (AI or MR) or ring (AI or MR) to ground as a result of inductive components in the registered terminal equipment shall not be capable of delivering more than 2 joules to a 500 ohm resistive termination.

(4) *Type I E&M leads.* Conditions for ''A'' side of interface with conditions for ''B'' side in parentheses. Registered terminal equipment shall assure that the dc current in the E lead does not exceed 100 milliamperes, no significant ac voltage to ground appears on the E&M leads,* no significant ac or dc voltage to ground appear on the (E) & (M) leads,* and the open circuit dc voltage to ground on the E&M leads does not exceed 56.5 volts and is not positive. M lead protection shall be provided to assure that voltages to ground do not exceed 80 volts. For relay contact implementation a power dissipation capability of 0.5 watt shall be provided in the shunt path. If the registered terminal equipment contains an inductive component in the E lead, it must assure that the transient voltage across the contact as a result of a relay contact opening, does not exceed the following voltage and duration limitations:

(i) 300 volts peak,

(ii) A rate of change of one volt per microsecond, and

(iii) An 80 volt level for more than 10 milliseconds.

(5) *Type II E&M leads.* Conditions for ''A'' side of interface with conditions for ''B'' side in parentheses. Registered terminal equipment shall assure that the dc current in the E and (SB) leads does not exceed 100 milliamperes and no significant ac voltage to ground appears on the E and (SB) leads,* no significant ac or dc voltages to ground appear on the M, SG, SB (E), (SG), and (M) leads from sources in the registered terminal equipment,* and the open circuit dc voltage to ground on the E and (SB) leads does not exceed 56.5 volts and is not positive. If the registered terminal equipment contains an inductive component in the E or (M) lead, it must assure that the transient voltage across the contact, as a result of a relay contact opening, does not exceed the following voltage and duration limitations;

(i) 300 volts peak,

(ii) A rate of change of one volt per microsecond, and

(iii) An 80 volt level for more than 10 milliseconds.

(6) *Off-premises station voltages.* (i) Talking battery or voltages applied by the PBX (or similar systems) to OPS interface leads for supervisory purposes must be negative with respect to ground, shall not exceed 56.5V dc for

*The ac component should not exceed 5 volts peak or the dc component 5 volts, where not otherwise controlled by § 68.308.

Classes A, B, and C, and shall not have a significant ac component.*

(ii) Ringing signals applied by the PBX (or similar systems) to OPS interface leads shall be applied for the purpose of station alerting only, and shall comply with requirements in paragraph (d) of this section. Ringing voltages shall be applied between the ring conductor and ground.

(7) For Local Area Data Channel interfaces, during normal operating modes including terminal equipment initiated maintenance signals, registered terminal equipment shall assure, except during the application of ringing (limitations specified in paragraph (d) of this section), with respect to telephone connections (tip, ring, tip 1, ring 1) that:

(i) Under normal operating conditions, the rms current per conductor between short-circuited conductors, including dc and ac components, does not exceed 350 milliamperes. For other than normal operating conditions, the rms current between any conductor and ground or between short-circuited conductors, including dc and ac components, may exceed 350 milliamperes for no more than 1.5 minutes.

(ii) The dc voltage between any conductor and ground does not exceed 80 volts. Under normal operating conditions it shall not be positive with respect to ground (though positive voltages up to 80 volts may be allowed during brief maintenance states);

(iii) Ac voltages are less than 42.4 volts peak between any conductor and ground, (Terminal equipment shall comply while other interface leads are both (A) unterminated and (B) individually terminated to ground); and,

(iv) Combined ac and dc voltages between any conductor and ground are less than 42.4 volts peak when the absolute value of the dc component is less than 21.2 volts, and less than (28.8 + 64 × Vdc) when the absolute value of the dc component is between 21.2 and 80 volts.

(8) During normal operation, registered terminal equipment for connection to ringdown voiceband private line interfaces or voiceband metallic channel interfaces shall assure that:

(i) Ringing voltage is used for alerting only, does not exceed the voltage and current limits specified in paragraph (d), and is:

(A) Applied to the ring conductor with the tip conductor grounded for 2-wire interfaces, or

(B) Simplexed on the tip and ring conductors with ground simplexed on the tip (1) and ring (1) conductors for 4-wire interfaces.

(ii) Except during the signaling mode or for monitoring voltage, there is no significant positive dc voltage with respect to ground (not over +5 volts):

(A) For 2-wire ports between the tip lead and ground and the ring lead and ground, and

(B) For 4-wire ports between the tip lead and ground, the ring lead and ground, the tip 1 lead and ground, and the ring 1 lead and ground.

(iii) The dc current per lead, under short circuit conditions shall not exceed 140 milliamperes.

(b) *Connection of nonregistered equipment to registered terminal equipment or registered protective circuitry*—(1) *General.* Leads to, or any elements having a conducting path to telephone connections, auxiliary leads or E&M leads shall:

(i) Be reasonably physically separated and restrained from and be neither routed in the same cable as nor use the same connector as leads or metallic paths connecting power connections;

(ii) Be reasonably physically separated and restrained from and be neither routed in the same cable as nor use adjacent pins on the same connector as metallic paths to leads to nonregistered equipment, when specification details provided to the Commission pursuant to § 68.200(g) do not show that interface voltages are less than non-hazardous voltage source limits in § 68.306(b)(4).

(2) *Connections to registered terminal equipment.* The voltage measurable between auxiliary leads, auxiliary leads to ground, E&M leads and ground, tip and ring, tip to ground, ring to ground, tip 1 and ring 1, tip 1 to ground, and ring 1 to ground shall not exceed 70 volts peak for more than 1 second, with tip to ring, tip 1 to ring 1, and auxiliary lead to auxiliary lead each terminated with 1500 ohms center-tapped through 1000 ohms to ground and each E&M

lead terminated in 1500 ohms to ground, if 120 volts rms 60 Hz, ac is applied between all connections to other equipment tied together (except connections to non-hazardous voltage sources) and ground. The source shall not be limited to less than 20 amperes continuously, not to less than 50 amperes for 1 minute, and shall not be interrupted by an overcurrent device permitting less total energy flow than a 20 ampere time delay fuse or breaker.

(3) *Connections to registered protective circuitry*. The voltage measurable between auxiliary leads, auxiliary leads to ground, E&M leads and ground, tip and ring, tip to ground, ring to ground, tip 1 and ring 1, tip 1 to ground, and ring 1 to ground shall not exceed 70 volts peak for more than 1 second, with tip to ring, tip 1 to ring 1 and auxiliary lead to auxiliary lead each terminated with 1500 ohms, center-tapped through 1000 ohms to ground, and each E&M lead terminated in 1500 ohms to ground if either 120 or 300 volts rms to 60 Hz. ac is applied:

(i) Between all protective circuitry connections other than telephone connections (and connection to non-hazardous voltage sources), tied together and ground; and

(ii) Across all protective circuitry connections, other than telephone connections (and connections to non-hazardous voltage sources) which have a transmission path to the telephone connections, with alternative leads grounded; under all reasonable applications of earth ground to the protective circuitry. The source shall not be limited to less than 20 amperes continuously, nor to less than 50 amperes for 1 minute, and shall not be interrupted by an overcurrent device permitting less total energy flow than a 20 ampere time delay fuse or breaker.

(4) *Non-hazardous voltage source.* A voltage source is considered a non-hazardous voltage source if it conforms with the requirements of §§68.302, 68.304, and 68.306(b)(1), with all connections to the source other than primary power connections treated as ''telephone connections,'' and if such source supplies voltages no greater than the following under all modes of operation and of failure:

(i) Ac voltages less than 42.4 volts peak;

(ii) Dc voltages less than 80 volts; and

(iii) Combined ac and dc voltages less than 42.4 volts peak when the absolute value of the dc component is less than 21.2 volts and less than (28.8 + 0.64 × V dc) when the absolute value of the dc component is between 21.2 and 80 volts.

(c) *Hazards from exposed surfaces (to be applied for intentional conductive paths to ground as required by §68.304).* The voltage measurable between auxiliary leads, auxiliary leads to ground, E&M leads and ground, tip and ring, tip and ground, ring and ground, tip 1 and ring 1, tip 1 and ground, ring 1 and ground, shall not exceed 70 volts peak for more than 1 second, with tip to ring, tip 1 and ring 1, and auxiliary lead to auxiliary lead each terminated with 1500 ohms, center-tapped through 1000 ohms to ground, and each E&M lead terminated in 1500 ohms to ground, if 120 volts rms 60 Hz. ac is applied between conductive exposed surfaces and ground. The source shall not be limited to less than 20 amperes continuously, nor to less than 50 amperes for 1 minute, and shall not be interrupted by an overcurrent device permitting less total energy flow than a 20 ampere time delay fuse or breaker.

(d) *Ringing sources.* Ringing sources, except for class A OPS interfaces, shall meet all of the following restrictions:

(1) The ringing signal shall use only frequencies whose fundamental component is equal to or below 70 Hz.[2]

(2) The ringing voltage shall be less than 300 V peak-to-peak and less than 200 V peak-to-ground across a resistive termination of at least 1 megohm.

(3) The ringing voltage shall be interrupted to create quiet intervals of at least one second (continuous) duration each separated by no more than 5 seconds. During the quiet intervals, the voltage to ground shall not exceed the voltage limits given in paragraph (a)(6)(i) of this section.

(4) As specified below, ringing sources shall be required to (*a*) include a series current-sensitive tripping device in the ring lead which will trip ringing as specified in Figure 68.306(d), and/or (*b*)

[2] 33 Hz may be the highest frequency necessary for OPS service.

provide a voltage to ground (monitoring voltage) on the tip or ring conductor with a magnitude of at least 19 volts peak (but may not exceed the voltage limits given in paragraph (a)(6)(i) of this section) whenever the ringing voltage is not present (idle state). Tripping devices and/or monitoring voltages are required dependent upon the current flow through a specified resistance connected between the ringing source (R(OPS)) and ground as follows:

(i) If the current through a 500 ohms (and greater) resistor does not exceed 100 mA peak-to-peak, neither a tripping device nor a monitoring voltage are required, or

(ii) If the current through a 1500 ohms (and greater) resistor exceeds 100 mA peak-to-peak, the ringing source shall include a tripping device. If the tripping device meets the operating characteristics as specified in Figure 68.306(d) with R=500 ohms (and greater), then no monitoring voltage is required. If, however, the tripping device only meets the given operating characteristics with R=1500 ohms (and greater), then the ringing source must also include a monitoring voltage as described above, or

(iii) If the current through a 500 ohms (and greater) resistor exceeds 100 mA peak-to-peak but does not exceed this value of current with a 1500 ohms (and greater) termination, the ringing source shall include either a tripping device which meets the operating characteristics as specified in Figure 68.306(d) with R=500 ohms (and greater), or a monitoring voltage.

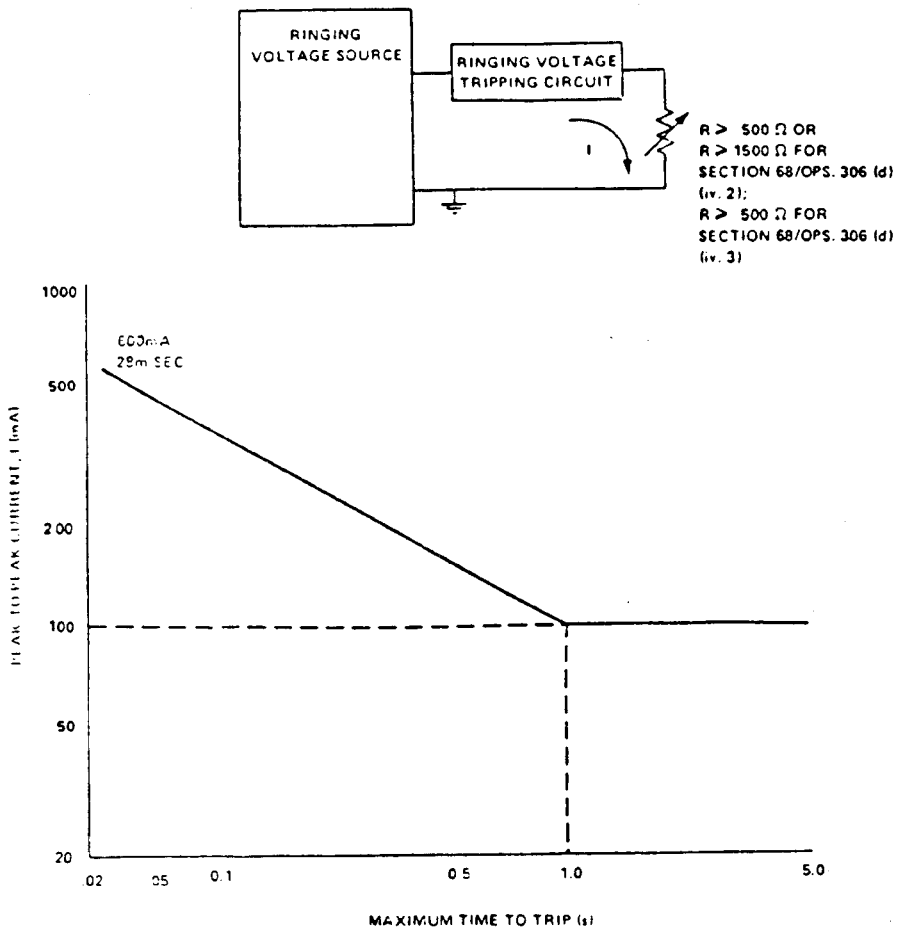

RINGING VOLTAGE TRIP CRITERIA

Fig. 68.306(d)

[45 FR 20854, Mar. 31, 1980, as amended at 45 FR 54342, Aug. 15, 1980; 45 FR 61632, Sept. 17, 1980; 47 FR 39686, Sept. 9, 1982; 51 FR 945, Jan. 9, 1986; 51 FR 16689, May 6, 1986; 60 FR 54814, 54815, Oct. 26, 1995]

§68.308 Signal power limitations.

(a) *General.* Limitation on signal power shall be met at the interface for all 2-wire network ports, tip and ring conductors to PSDS Types II and III, and, where applicable to services, both transmit and receive pairs of all 4-wire network ports. Signal power measurements will be made using terminations as specified in each of the following limitations. The transmit and receive pairs of 4-wire network ports shall be measured with the pair not under test connected to a termination equivalent to that specified for the pair under test. Through-gain limitations apply only in the direction of transmission to the network.

(b) *Voice band metallic signal power*—(1) Limitations at the interface on internal signal sources not intended for network control signaling.

(i) For registered terminal equipment or registered protective circuitry, connected to interfaces associated with services contained in §68.2(a) (1), (2), and (7), other than data equipment or data protective circuitry which is registered in accordance with §68.308(b)(4), the maximum power of other than live voice signals delivered to a loop simulator circuit shall not exceed −9dB with respect to one milliwatt, when averaged over any 3-second interval. No manufacturing tolerance is allowed which would permit this power to be exceeded by any unit of equipment.

(ii) For tie trunk type interfaces, the maximum power of other than live voice signals delivered to a 600 ohm termination shall not exceed the following:

MAXIMUM POWER WITH RESPECT TO ONE MILLIWATT WHEN AVERAGED OVER ANY 3-SECOND INTERVAL

2-wire	4-wire Lossless	4-wire CTS [b]
−15 dB[a]	−15 dB[a]	−19 dB, nom.

NOTES: (a) The maximum signal power may be exceeded by as much as 1.0 dB by a single unit of equipment or circuitry, provided that the power averaged over all units of production, complies with the specified limitations.

(b) The 4-Wire CTS shall meet the requirements for Tie Trunk Transmission Interfaces as defined in §68.3.

(iii) For OPS lines, the maximum power of other than live voice signals delivered to an OPS line simulator circuit shall not exceed −13 dB with respect to one milliwatt, when averaged over any 3-second interval.

(iv) For AIOD channels, the maximum signal power delivered to an AIOD data channel simulator circuit in each of the following operating states shall not exceed −4 dB with respect to one milliwatt averaged over any 3-second time interval:

Simulator circuit[1]	AIOD tip and ring[2]
1	−42.5–56.5
2	0
3	0

[1] Operating state of simulator circuit.

[2] Remote terminal equipment open circuit DC volts to ground on AIOD tip and ring.

The maximum signal power may exceed −4 dB with respect to one milliwatt by as much as 1.0 dB provided that the power averaged over all units of the equipment complies with the specified maximum.

NOTE: The maximum signal power may be exceeded by as much as 1.0 dB by a single unit of equipment or circuitry, provided that the power, averaged overall units of production, complies with the specified limitations.

(v) For registered test equipment or registered test circuitry the maximum signal power delivered to a loop simulator circuit shall not exceed 0 dBm when averaged over any 3-second interval. No manufacturing tolerance is allowed which would permit this power to be exceeded by any unit of equipment.

(vi) For voiceband private lines using ringdown or inband signaling the maximum power of other than live voice signals delivered to a 600 ohm termination shall not exceed −13dBm when averaged over any 3-second interval.

(vii) For voiceband private lines using inband signaling in the band 2600±150 Hz, the maximum power delivered to a 600-ohm termination shall not exceed −8 dBm during the signaling mode. The maximum power delivered to a 600 Ohm termination in the on-hook steady state supervisory condition shall not exceed −20 dBm. The maximum power of other than live voice signals delivered to a 600-ohm termination during the non-signaling mode and for other inband systems shall not exceed −13dBm when averaged over any 3-second interval. The maximum signal power may be exceeded by as much as 1.0 dB by a single unit of equipment or circuitry, provided that the power averaged over all

units of production complies with the specified limitation.

(viii) For PSDS (Types I, II and III) terminal equipment when in the digital mode of transmission, the maximum equivalent power of any encoded analog signal (other than live voice) shall not exceed −12dBm when averaged over any 3-second interval. The equivalent analog power shall be derived by a zero-level decoder at the network interface to PSDS (Type II or III) facilities.

(2) Limitations on internal signal sources primarily intended for network control signaling, contained in voice and data equipment.

(i) For all operating conditions of registered terminal equipment and registered protective circuitry, the maximum power delivered to a loop simulator circuit shall not exceed one milliwatt when averaged over any 3-second interval.

(ii) For tie trunk applications, the maximum power delivered to a 600 ohm termination for registered terminal equipment and registered protective circuitry under all operating conditions shall not exceed the following:

MAXIMUM POWER WITH RESPECT TO ONE MILLIWATT, WHEN AVERAGED OVER ANY 3-SECOND INTERVAL

2-wire	4-wire Lossless	4-wire CTS
−4 dB	−4 dB	−8 dB, nom.

(iii) For PSDS (Types I, II and III) terminal equipment, when in the digital mode of transmission, the maximum equivalent power of any encoded analog signal shall not exceed −3dBm when averaged over any 3-second time interval. The equivalent analog signal shall be derived by a zero-level decoder located at the network interface to PSDS (Type II or III) facilities.

(3) Registered one port and multiport terminal equipment and protective circuitry with provision for through transmission from other terminal equipment, excluding data equipment and data protective circuitry which are registered in accordance with § 68.308(b)(4).

(i) Where through-transmission equipment provides a dc electrical signal to equipment connected therewith (e.g., for powering of electro-acoustic transducers), dc conditions shall be provided which fall within the range of conditions provided by a loop simulator circuit unless the combination of the through-transmission equipment and equipment connected therewith is registered as a combination which conforms to § 68.308(b) (1) and (2).

(ii) Through-transmission equipment to which remotely connected data terminal equipment may be connected shall not be equipped with or connected to either a Universal or Programmed Data Jack used in data configurations. (See §§ 68.308(b)(4) and 68.502(e)).

(4) Limitations on registered data terminal equipment and registered one-port protective circuitry with provision for through-transmission from data equipment. When such equipment or circuitry is used for the transmission of data signals to the telephone network, it shall assure in all operating conditions, other than network control signaling (see § 68.308(b)(2) of this section), that one of the following limitations is met, depending upon the means of connection of the equipment or circuitry to the telephone network. The transmitted signal power, averaged over any 3-second time interval, delivered to a loop simulator circuit, shall not exceed:

(i) A maximum level adjustable to no greater than –4 dB with respect to one milliwatt, for connection to a Universal Data Jack used in the ''fixed loss loop'' configurations of § 68.502(e).

(ii) A maximum level determined by means of connections in the Programmed Data Jack or Universal Data Jack, used in the ''programmed'' configurations of § 68.502(e), which level can be programmed in 1 dB steps from −12 dB to 0 dB with respect to one milliwatt by means of programming connections made within the jack.

(iii) A nonadjustable level no greater than –9 dB with respect to one miliwatt for connection by means other than those which implement the limitations in paragraphs (b)(4)(i) and (ii) of this section. Equipment or circuitry designed in accordance with this –9 dBm limitation shall be treated as non-live voice equipment within these rules.

The maximum signal power specified in (paragraphs (b)(4) (i) and (ii) of this section may be exceeded by as much as

1.0 dB by a single unit of equipment or circuitry, provided that the power averaged over all units of production, complies with the specified limitations. The maximum signal power specified in paragraphs (b)(4)(iii) of this section may not be exceeded by any units of production.

(5) Registered one port and multiport terminal equipment and protective circuitry with provision for through-transmission from ports to other equipment which is separately registered for the public switched network, or ports to other network interfaces.

(i) Registered terminal equipment and registered protectives circuitry shall have no adjustments that will allow net amplification to occur in either direction of transmission in the through-transmission path within the freguency range of 200 to 4000 Hertz that will exceed the following:

MAXIMUM ALLOWABLE NET AMPLIFICATION BETWEEN PORTS (A)(D)(E)(F)

From (F) \ To	Tie Trunk Type Ports (C): 2-Wire	Tie Trunk Type Ports (C): 4-Wire Lossless	Tie Trunk Type Ports (C): 4-Wire CTS	Tie Trunk Type Ports (C): Subrate 1.544 Mbps Satell. 4 W	Tie Trunk Type Ports (C): Subrate 1.544 Mbps Tandem 4 W	OPS Ports (2-Wire) (B)	Public Switched Network Ports (2-Wire)	HCC Digital PBX-CO 4-Wire
Tie Trunk Type Ports (C): 2-W	0dB avg 1.5dB max	0dB avg 1.5dB max	–4dB nom.	0dB avg 1.5dB max	3dB avg 4.5dB max	–2dB avg –0.5dB max	–	–
Tie Trunk Type Ports (C): 4-W Lossless	0dB avg 1.5dB max	0dB avg 1.5dB max	–4dB nom.	0dB avg 1.5dB max	3dB avg 4.5dB max	–2dB avg –0.5dB max	–	–
Tie Trunk Type Ports (C): 4-W CTS	–4dB nom.	–4dB nom.	–8dB nom.	–4dB nom.	–1dB nom.	–6dB nom.	–	–
Tie Trunk Type Ports (C): Subrate 1.544 Mbps Satellite 4 W	0dB avg 1.5dB max	0dB avg 1.5dB max	–4dB nom.	0dB avg 1.5dB max	0dB avg 1.5dB max	0dB avg 1.5dB max	–	–
Tie Trunk Type Ports (C): Subrate 1.544 Mbps Tandem 4 W	–3dB avg –1.5dB max	–3dB avg –1.5dB max	–7dB nom.	0dB avg 1.5dB max	0dB avg 1.5dB max	0dB avg 1.5dB max	–	–
RTE (B)	–2dB avg –0.5dB max	–2dB avg –0.5dB max	–6dB nom.	–3dB avg –1.5dB max	–3dB avg –1.5dB max	0dB avg 1.5dB max	0dB avg 1.5dB max	–3dB avg –1.5dB max
OPS 2-W (B)	–2dB avg –0.5dB max	–2dB avg –0.5dB max	–6dB nom.	0dB avg 1.5dB max	0dB avg 1.5dB max	0dB avg 1.5dB max	0dB avg 1.5dB max	0dB avg 1.5dB max
Public Switch Net 2-W	–	–	–	–	–	0dB avg 1.5dB max	–	–
HCC Digital PBX-CO 4-W	–	–	–	–	–	0dB avg 1.5dB max	–	–

(A) The source impedance for all measurements shall be 600 ohms. All ports shall be terminated in *appropriate* loop or private line channel simulator circuits or 600 ohm terminations. The numerical ''avg.'' and ''max.'' requirements mean that the net gain for each type of connection through such equipment or circuitry shall be designed not to exceed the average gain for such paths in all units; however, the gain for any path of any single unit may exceed the average by as much as the maximum provided that the net gain, averaged over such paths in all units of production, is no greater than the average. The term ''nom.'' allows for variations encountered in conventional terminating set losses as defined in § 68.3.

(B) These ports are for 2-wire on-premises station ports to separately registered terminal equipment.

(C) The 4-Wire CTS shall meet the requirements for Tie Trunk Transmission Interfaces as defined in § 68.3.

(D) These through gain limitations are applicable to multiport systems where channels are not derived by time or frequency compression methods. Terminal equipment employing such compression techniques shall assure that equivalent compensation for through gain parameters is demonstrated in the registration application.

(E) Registered terminal equipment and registered protective circuitry may have net amplification exceeding the limitations of this subsection provided that, for each network interface type to be connected, the absolute signal power levels specified on this section are not exceeded.

(F) The indicated gain is in the direction which results when moving from the horizontal entry toward the vertical entry.

(G) Registered terminal equipment or protective circuitry with the capability for through-transmission from voiceband private line channels or voiceband metallic channels to other telephone network interfaces shall assure that the absolute signal power levels specified in this section, for each telephone network interface type to be connected, are not exceeded.

(H) Registered terminal equipment or protective circuitry with the capability for through transmission from voiceband private line channels or voiceband metallic private line channels to other telephone network interfaces shall assure, for each telephone network interface type to be connected, that signals with energy in the 2450 to 2750 Hertz band are not through transmitted unless there is at least an equal amount of energy in the 800 to 2450 Hertz band within 20 milliseconds of application of signal.

(ii) The insertion loss in through connection paths for any frequency in the 800 to 2450 Hertz band shall not exceed the loss at any frequency in the 2450 to 2750 Hertz band by more than 1 dB (maximum loss in the 800 to 2450 Hertz band minus minimum loss in the 2450 to 2750 Hertz band plus 1 dB.

(6) *For tie trunk type interfaces—Limitation on idle circuit stability parameters.* For idle state operating conditions of registered terminal equipment and registered protective circuitry, the following limitations shall be met:

(i) For the two-wire interface

$$RL \geq \begin{cases} \left(9 - 3\,\dfrac{\log(f/200)}{\log 2.5}\right)\text{dB}; & \text{for } 200\text{ Hz} \leq f \leq 500\text{ Hz} \\ 6\text{ dB} & ;\ \text{for } 500\text{ Hz} \leq f \leq 3200\text{ Hz} \end{cases}$$

(ii) For the four-wire lossless interface

$$tl_f \geq \begin{cases} \left(10-4\,\dfrac{\log(f/200)}{\log 2.5}\right) \text{ dB; for } 200 \text{ Hz} \leq f \leq 500 \text{ Hz} \\ 6 \text{ dB} \qquad\qquad ; \text{ for } 500 \text{ Hz} \leq f \leq 3200 \text{ Hz} \end{cases}$$

$$tl_r > 40 \text{ dB}$$

$$RL_1, RL_o \geq 3\text{dB}$$

(iii) For the four-wire conventional terminating set interface

$$tl_f,\ tl_r \geq \begin{cases} \left(18-4\,\dfrac{\log(f/200)}{\log 2.5}\right) \text{ dB; for } 200 \text{ Hz} \leq f \leq 500 \text{ Hz} \\ 14 \text{ dB} \qquad\qquad ; \text{ for } 500 \text{ Hz} \leq f \leq 3200 \text{ Hz} \end{cases}$$

$$RL_i,\ RL_o \geq 3 \text{ dB}$$

where RL the return loss of 2-wire terminal equipment at the interface with respect to 600 ohms + 2.16 uF (i.e., Z_{ref} = 600 ohms + 2.16 uF).

$$RL \triangleq 20 \log_{10} \left| \frac{Z_{PBX} + Z_{ref}}{Z_{PBX} - Z_{ref}} \right|$$

RL_i the terminal equipment input (receive) port return loss with respect to 600 ohms (i.e., Z_{ref} = 600 ohms).

$$RL_i \triangleq 20 \log_{10} \left| \frac{Z_{PBX\ (input)} + Z_{ref}}{Z_{PBX\ (input)} - Z_{ref}} \right|$$

RL_o the terminal equipment output (transmit) port return loss with respect to 600 ohms (i.e., Z_{ref} = 600 ohms).

$$RL_o \triangleq 20 \log_{10} \left| \frac{Z_{PBX\ (output)} + Z_{ref}}{Z_{PBX\ (output)} - Z_{ref}} \right|$$

tl - the transducer loss between the receive and transmit ports of the 4-wire PBX.

tl_f is the transducer loss in the <u>forward</u> direction from the <u>receive</u> port to the <u>transmit</u> port of the PBX.

$$tl_f \triangleq 20 \log_{10} \left| \frac{I_i}{I_r} \right|$$

where I_i is the current sent into the <u>receive</u> port and I_r is the current received at the <u>transmit</u> port terminated at 600 ohms.

tl_r is the transducer loss in the <u>reverse</u> direction, from the <u>transmit</u> port to the <u>receive</u> port of the PBX.

$$tl_r \triangleq 20 \log_{10} \left| \frac{I_i}{I_r} \right|$$

where I_i is the current sent into the <u>transmit</u> port and I_r is the current received at the <u>receive</u> port terminated at 600 ohms.

Note: The source impedance of I_i is 600 ohms.

(7) *Registered terminal equipment and registered protective circuitry shall provide the following range of dc conditions to off-premises station (OPS) lines.* (i) DC voltages applied to the OPS interface for supervisory purposes and during network control signaling shall meet the limits specified in § 68.306(a)(6)(i).

(ii) DC voltages applied to the OPS interface during the talking state shall meet the following requirements:

(A) The maximum open circuit voltage across the tip (T(OPS)) and ring (R(OPS)) leads for Classes A, B, and C shall not exceed 56.5 volts, and

(B) Except for class A OPS interfaces, the maximum dc current into a short circuit across the tip (T(OPS)) and ring (R(OPS)) leads shall not exceed 140 mA, and

(C) Except for class A OPS interfaces, the dc current into the OPS line simulator circuit must be at least 20 mA for the following conditions (see Fig. 68.3(f)):

R2 + RL

Condition	Class B	Class C
1	600	1300
2	1800	2500

(8) For Message Registration the requirements of § 68.308(b) do not apply.

(9) For connections to 1.544 Mbps digital services, the permissible code words for unequipped Mu-255 encoded subrate channels are limited to those corresponding to signals of either polarity, of magnitude equal to or less than X48, where code word, XN is derived by:

$$XN=(255-N) \text{ base } 2$$

$$-XN=(127-N) \text{ base } 2$$

(c) *Signal power in the 3995–4005 Hz frequency band*—(1) *Power resulting from internal signal sources contained in registered protective circuitry and registered terminal equipment (voice and data), not intended for network control signaling.* For all operating conditions of registered terminal equipment and registered protective circuitry which incorporate signal sources other than sources intended for network control signaling, the maximum power delivered by such sources in the 3995–4005 Hertz band to an appropriate simulator circuit, shall be 18 dB below maximum permitted power specified in paragraph (b) of this section, for the 200–4000 Hertz band.

(2) *Terminal equipment with provision for through-transmission from other equipments.* The loss in any through transmission path of registered terminal equipment and registered protective circuitry at any frequency in the 600 to 4000 Hertz band shall not exceed, by more than 3 dB, the loss at any frequency in the 3995 to 4005 Hertz band, when measured into an appropriate simulator circuit from a source which appears as 600 ohms across tip and ring.

(3) For Message Registration the requirements of § 68.308(c) do not apply.

(d) *Longitudinal voltage at frequencies below 4 kHz.* The weighted root-mean-squared voltage* averaged over 100 milliseconds that is the resultant of all of the component longitudinal voltages in the 100 Hz to 4 kHz band after weighting according to the curve of Figure 68.308(a), shall not exceed the maximum indicated under the conditions stated in paragraph (g). The weighting curve in Figure 68.308(a) has an absolute gain of unity at 4 kHz.

Frequency range	Maximum RMS voltage	Impedance
100 Hz to 4 kHz	– 30 dBV	500 ohms

(e) *Voltage in the 4 kHz to 6 MHz frequency range—general case—2-wire and 4-wire lossless interface—4-wire CTS interface (except LADC).* Except as noted, the root-mean-squared (RMS) voltage as averaged over 100 milliseconds at the telephone connections of registered terminal equipment and registered protective circuitry in all of the possible 8 kHz bands within the indicated frequency range and under the conditions specified in paragraph (g) shall not exceed the maximum indicated below. For (1)(i) and (2)(i) below, ''f'' is the center frequency in kHz of each of the possible 8 kHz bands beginning at 8 kHz.

* Note: Average magnitudes may be used for signals that have peak-to-RMS ratios of 20 dB and less. RMS limitations must be used instead of average values if the peak-to-RMS ratio of the interfering signal exceeds this value.

(1) *Metallic voltage*—(i) *4 kHz to 270 kHz.*

Center frequency (f) of 8 kHz band	Max voltage in all 8 kHz bands	Metallic terminating impedance
8 kHz to 12 kHz.	−(6.4+12.6 logf) dBV	300 ohms
12 kHz to 90 kHz.	(23–40 logf) dBV	135 ohms
90 kHz to 266 kHz.	−55 dBV	135 ohms

(ii) *270 kHz to 6 MHz.* The RMS value of the metallic voltage components in the frequency range of 270 kHz to 6 MHz shall, averaged over 2 microseconds, not exceed −15 dBV. This limitation appli'p with a metallic termination having an impedance of 135 ohms.

(2) *Longitudinal voltage*—(i) *4 kHz to 270 kHz.*

Center frequency (f) of 8 kHz band	Max voltage in all 8 kHz bands	Longitudinal terminating impedance
8 kHz to 12 kHz.	−(18.4+20 logf) dBV	500 ohms
12 kHz to 42 kHz.	(3–40 logf) dBV	90 ohms
42 kHz to 266 kHz.	−62 dBV	90 ohms

(ii) *270 kHz to 6 MHz.* The RMS value of the longitudinal voltage components in the frequency range of 270 kHz to 6 MHz shall, not exceed −30 dBV. This limitation applies with a longitudinal termination having an impedance of 90 ohms.

(f) *LADC interface.* The metallic voltage shall comply with the general requirements in (1) below as well as the additional requirements specified in (2) and (3) as stated. The requirements apply under the conditions specified in paragraph (g). Terminal equipment for which the magnitude of the source and/or terminating impedance exceeds 300 ohms, at any frequency in the range of 100 kHz to 6 MHz, at which the signal (transmitted and/or received) has significant power, shall be deemed not to comply with these requirements. A signal is considered to have ''significant power'' at a given frequency if that frequency is contained in a designated set of frequency bands which collectively have the property that the RMS voltage of the signal components in those bands is at least 90% of the RMS voltage of the total signal. The designated set of frequency bands must be used in testing all frequencies.

(1) *Metallic voltages—frequencies below 4 kHz*—(i) *Weighted RMS Voltage in the 10 Hz to 4 kHz Frequency Band.* The weighted root-mean-square (rms) metallic voltage averaged over 100 milliseconds, frequency components weighted according to the curve in Figure 68.308(a), shall not exceed the maximum indicated below. The weighting curve in Figure 68.308(a) has an absolute gain of unity at 4 kHz.

Frequency range	Maximum voltage
10 Hz to 4 kHz	+3 dBV

(ii) *RMS voltage in 100 Hz bands in the frequency range 0.7 kHz to 4 kHz.* The root-mean-squared (rms) metallic voltage averaged over 100 milliseconds in the 100-Hz bands having center frequencies between 750 Hz and 3950 Hz shall not exceed the maximum indicated below.

Center frequency (f) of 100-Hz bands	Maximum voltage
750 to 3950 Hz	−6 dBV

(2) *Metallic voltages—frequencies above 4 kHz—LADC interface*—(i) *100 Hz Bands over frequency range of 4 kHz to 270 kHz.* The root-mean-square (rms) voltage as averaged over 100 milliseconds in all possible 100 Hz bands between 4 kHz and 270 kHz for the indicated range of center frequencies and under the conditions specified in paragraph (g) shall not exceed the maximum indicated below:

Center frequency (f) of 100 Hz bands	Maximum voltage in all 100 Hz bands
4.05 kHz to 4.60 kHz	0.5 dBV
4.60 kHz to 5.45 kHz	(59.2–90 log f)dBV
5.45 kHz to 59.12 kHz	(7.6–20 log f)dBV
59.12 kHz to 266.00 kHz	(43.1–40 log f)dBV

Where f=center frequency in kHz of each of the possible 100 Hz bands.

(ii) *8 kHz bands over frequency range of 4 kHz to 270 kHz.* The root-mean-square (rms) voltage as average over 100-milliseconds in all of the possible 8 kHz bands between 4 kHz and 270 kHz for the indicated range of center frequencies and under the conditions specified in paragraph (g) shall not exceed the maximum indicated below:

Center frequency of (f) 8 kHz bands	Maximum voltage in all 8 kHz bands
8 kHz to 120 kHz	(17.6–20 log f)dBV
120 kHz to 266 kHz	(59.2–40 log f)dBV

Where f=center frequency in kHz of each of the possible 8 kHz bands.

(iii) *RMS voltage at frequencies above 270 kHz.* The root-mean-square (rms) value of the metallic voltage components in the frequency range of 270 kHz to 6 mHz shall, averaged over 2 microseconds, not exceed −15 dBV. This limitation applies with a metallic termination having an impedance of 135 ohms.

(iv) *Peak voltage.* The total peak voltage for all frequency components in the 4 kHz to 6 MHz shall not exceed 4.0 volts.

(3) *Longitudinal voltage*—(i) *Frequencies below 4 kHz.* With the frequency components weighted in accordance with the curve in Figure 68.308(a), the weighted root-mean-square voltage of all frequency components, in the frequency band from 10 Hz to 4 kHz, averaged over 100 milliseconds, shall not exceed the maximum indicated below under the conditions stated in paragraph (g). The weighting curve in Figure 68.308(a) has an absolute gain of unity at 4 kHz.

Frequency range	Max RMS voltage
10 Hz–4kHz	−37 dBV

(ii) 4 kHz to 270 kHz

Center frequency (f) of 8 kHz band	Max voltage in all 8 kHz bands	Longitudinal terminating impedance
8 kHz to 12 kHz.	−(18.4+20logf) dBV	500 ohms
12 kHz to 42 kHz.	(3–40logf) dBV	90 ohms
42 kHz to 266 kHz.	−62 dBV	90 ohms

Where f=center frequency in kHz of each of the possible 8 kHz bands.

(iii) *270 kHz to 6 MHz.* The root-mean-square (RMS) value of the longitudinal voltage components in the frequency range of 270 kHz to 6 MHz shall, averaged over 2 microseconds, not exceed −30 dBV. This limitation applies with a longitudinal termination having an impedance of 90 ohms.

(g) Requirements in paragraphs (d), (e) and (f) apply under the following conditions:

(1) All registered terminal equipment, except equipment to be used on LADC, and all registered protective circuitry must comply with the limitations when connected to a termination equivalent to the circuit depicted in Figure 68.308(b) and *when placed in all operating states of the equipment except* during network control signaling. For message registration in the ground return mode, a termination equivalent to Figure 68.308(c) is required, and metallic voltage limitations do not apply. LADC registered terminal equipment must comply with the metallic voltage limitations when connected to the circuits of Figure 68.3(k) and must comply with the longitudinal limitations when connected to the circuits of Figure 68.308(b), as indicated.

(2) All registered terminal equipment and registered protective circuitry must comply with the limitations in the offhook state over the range of loop current that would flow with the equipment *connected* to an appropriate loop simulator circuit.

(3) Registered terminal equipment and registered protective circuitry with provision for through-transmission from other equipments shall comply with the limitations with a 1000 Hz tone applied *from a 600-ohm source (or, if appropriate, a source which reflects a 600-ohm impedance across tip and ring) at the maximum level that would be applied* during normal operation. Registered protective circuitry for data shall also comply with the tone level 10 dB higher than that expected during normal operation.

(4) Voice terminal equipment containing electroacoustic transducers for live voice input, including recording devices, shall comply with the limitations with a 1000 Hz acoustic signal applied to the electroacoustic transducers that results in a power delivered into a 600 ohm load impedance of −13 dB with respect to one milliwatt for the 2-wire and 4-wire lossless interfaces and −19 dB with respect to one milliwatt for the 4-wire CTS interface.

(5) Except during the transmission of ringing (§ 68.306(d)) and Dual Tone Multifrequency (DTMF) signals, LADC

registered terminal equipment shall comply with all requirements in all operating states and with loop current which may be drawn for such purposes as loop back signaling. The requirements in § 68.308(f)(1) except in paragraphs (i) and (ii) also apply during the application of ringing. The requirement in § 68.308(d)(2) and the requirements in § 68.308(f)(1) (i) and (ii) apply during ringing for frequencies above 300 Hz and with the maximum voltage limits raised by 10 dB. DTMF signals which are used for the transmission of alphanumeric information and which comply with the requirements in § 68.308(f)(1)((i) and in § 68.308(f)(2) or (3) as applicable, shall be deemed to comply with the requirements in § 68.308(f)(1)(ii) provided that, for automatically originated DTMF signals, the duty cycle is less than 50 percent.

(6) LADC registered terminal equipment shall comply with all applicable requirements, except those specified in § 68.308(f)(1) (i) and (ii), during the transmission of each possible data signal sequence of any length. For compliance with § 68.308(f)(3)(i), the limitation applies to the rms voltage averaged as follows:

(i) For digital signals, baseband or modulated on a carrier, for which there are defined signal element intervals, the rms voltage is averaged over each such interval. Where multiple carriers are involved, the voltage is the power sum of the rms voltages for the signal element intervals for each carrier.

(ii) For baseband analog signals, the rms voltage is averaged over each period (cycle) of the highest frequency of the signal (3 dB point on the spectrum). For analog signals which are modulated on a carrier (whether or not the carrier is suppressed), it is averaged over each period (cycle) of the carrier. Where multiple carriers are involved, the voltage is the power sum of the rms voltage of each carrier.

(iii) For signals other than the types defined in paragraphs (g)(6) (i) and (ii) of this section, the peak amplitude of the signal must not exceed +1 dBV.

(7) Equipment shall comply with the requirements in § 68.308(f)(1) (i) and (ii) during any data sequence which may be transmitted during normal use with a probability greater than 0.001. If the sequences transmitted by an equipment are application dependent, the user instruction material shall include a statement of any limitations assumed in demonstrating compliance of the equipment.

(8) In addition to the conditions specified in paragraph (g)(5) of this section, LADC registered terminal equipment which operates in one or more modes as a receiver shall comply with requirements in § 68.308(f)(3) with a tone at all frequencies in the range of potential received signals and at the maximum power which may be received.

(h) *Interference limitations for transmission of bipolar signals over digital services*—(1) *Limitations on Terminal Equipment Connecting to Subrate Digital Services*—(i) *Pulse repetition rate.* The pulse repetition rate shall be synchronous with 2.4, 4.8, 9.6 or 56.0 kilobits per second.

(ii) *Template for maximum output pulse.* When applied to a 135 ohm resistor, the instantaneous amplitude of the largest isolated output pulse obtainable from the registered terminal equipment shall not exceed by more than 10% the instantaneous voltage defined by a template obtained as follows: The limiting pulse template shall be determined by passing an ideal 50% duty cycle rectangular pulse with the amplitude/pulse rate characteristics defined in Table I through a single real pole low pass filter having a cutoff frequency in Hertz equal to 1.3 times the bit rate. For bit rates of 2.4, 4.8 and 9.6 kbps, the filtered pulses shall also be passed through a filter providing the additional attenuation in Table II.

TABLE I—DRIVING PULSE AMPLITUDE

Pulse rate (R) (kbps)	Amplitude (A) (volts)
2.4	1.66
4.8	1.66
9.6	0.83
56.0	1.66

TABLE II—MINIMUM ADDITIONAL ATTENUATION

Pulse rate (R) (kbps)	Frequency band 24 to 32 kHz (dB)	Frequency band 72 to 80 kHz (dB)
2.4	5	1
4.8	13	9
9.6	17	8

The attenuation indicated may be reduced at any frequency within the band by the weighting curve of Figure 68.308(d). Minimum rejection is never less than 0 dB; i.e., the weight does not justify gain over the system without added attenuation.

(iii) *Average power.* The average output power when a random signal sequence, (0) or (1) equiprobable in each pulse interval, is being produced as measured across a 135 ohm resistance shall not exceed 0 dBm for 9.6 kbps or +6 dBm for 2.4 kbps, 4.8 kbps and 56 kbps.

(iv) *Encoded analog content.* If registered terminal equipment connecting to subrate services contains an analog-to-digital converter, or generates signals directly in digital form which are intended for eventual conversion into voiceband analog signals, the encoded analog content of the digital signal must be limited. The maximum equivalent power of encoded analog signals for other than live voice as derived by a zero level decoder test configuration shall not exceed −12 dBm when averaged over any 3-second time interval. The maximum equivalent power of encoded analog signals as derived by a zero level decoder test configuration for signals intended for network control signaling shall not exceed −3 dBm when averaged over any 3-second interval.

(2) Limitations on Terminal Equipment Connecting to 1.544 Mbps Digital Services and ISDN PRA Services—

(i) *Pulse repetition rate.* The pulse repetition rate shall be within ± 75 pulses per second of 1.544 x 10^6 pulses per second.

(ii) *Output pulse templates.* The registered terminal equipment shall be capable of optionally delivering three sizes of output pulses. The output pulse option shall be selectable at the time of installation.

TABLE III

Pulse Height (volts)	2.4 to 3.6.
Pulse Width (half amplitude) (nsec)	324 +/−45.
Maximum rise or fall time; from 10% to 90% points (nsec).	100.

(A) *Option A output pulse.* When applied to a 100 ohm resistor, the instantaneous amplitude of the largest output pulse obtainable from the registered terminal equipment shall fall within the pulse template defined in Table III.

(B) *Option B output pulse.* When applied to a 100 ohm resistor, the instantaneous amplitude of the output from the registered terminal equipment obtained when Option B is implemented shall fall within the pulse template obtained by passing the bounding pulses permitted by Table III through the following transfer function.

$$\frac{V_{out}}{V_{in}} = \frac{n_2 S^2 + n_1 S + n_o}{d_3 S^3 + d_2 S^2 + d_1 S + d_0}$$

where:
$n_0 = 1.6049 \times 10^6$
$n_1 = 7.9861 \times 10^{-1}$
$n_2 = 9.2404 \times 10^{-8}$
$d_0 = 2.1612 \times 10^6$
$d_1 = 1.7223$
$d_2 = 4.575 \times 10^{-7}$
$d_3 = 3.8307 \times 10^{-14}$
$S = j2\pi f$
f=frequency (Hertz)

(C) *Option C output pulse.* When applied to a 100 ohm resistor, the instantaneous amplitude of the output from the registered terminal equipment obtained when Option C is implemented shall fall within the pulse template obtained by passing the pulses obtained in Option B through the transfer function in Option B a second time.

(iii) *Adjustment of signal voltage.* The signal voltage at the network interface must be limited so that the range of pulse amplitudes received at the first Telephone Company repeater is controlled to ±4dB. This limitation is achieved by implementing the appropriate output pulse option as a function of Telephone Company cable loss as specified at time of installation.

Cable loss at 772 kHz (dB)	Terminal equipment	
	Output pulse	Loss at 772 kHz
15 to 22	Option A	0
7.5 to 15	Option B	7.5
0 to 7.5	Option C	15.0

(iv) *Output power.* The output power in a 3 kHz band about 772 kHz when an all ones signal sequence is being produced as measured across a 100 Ohm terminating resistance shall be within the following limits:

Output pulse option	Power in 3 kHz band about 772 kHz (dBm)
A	12 to 19
B	4.5 to 11.5
C	−3 to + 4

The power in a 3 kHz band about 1.544 Mhz shall be at least 25dB below that in a 3 kHz band about 772 kHz.

(v) *Encoded analog content.* If registered terminal equipment connected to 1.544 Mbps digital service or to ISDN PRA service contains an analog-to-digital converter, or generates signals in digital form which are intended for eventual conversion to voiceband analog signals, the encoded analog content of the subrate channels of the ISDN information bearing channels within the 1.544 Mbps signal must be limited. The maximum equivalent power of encoded analog signals for other than live voice that are not intended for network control signaling as derived by a zero level decoder test configuration shall not exceed –12 dBm when averaged over any 3–second time interval. The maximum equivalent power of encoded analog signals as derived by a zero level decoder test configuration for signals intended for network control signaling shall not exceed –3 dBm when averaged over any 3–second interval.

(3) *Pulse Repetition Rate.* For PSDS (Type II) the pulse repetition rate shall be a maximum of 144,000 pulses per second +/−5 pulses per second; for PSDS (Type III) the pulse repetition rate shall be a maximum of 160,000 pulses per +/−5 pulses per second.

(i) *Template for maximum output pulse.* When applied to a 135 ohm resistor the instantaneous amplitude of the largest isolated output pulse obtainable from the registered terminal equipment shall fall within the template of Table IV(A) for PSDS Type II or Table IV(B) for PSDS Type III. The limiting pulse template shall be defined by passing an ideal 50% duty cycle rectangular pulse within he amplitude/pulse rate characteristics of Table IV(A) or Table IV(B) through a 1-pole low-pass filter with a 3dB frequency of 260 kHz.

(ii) Below is the template for maximum output pulse:

Pulse characteristics	Table IV(A)	Table IV(B)
Pulse Height +/−5%	2.6 volts +/−5%	2.4. volts
Pulse Width—100ns	3472.2 +/−150ns	3125 +/−.
Max Rise or Fall Time—microsecond	100ns	1.2.
(From 10% to 90% points) microsecond		+/− 0.2.

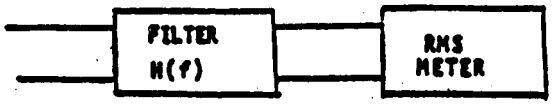

$H(f) = -12 - 20 \log_{10} f)dB$

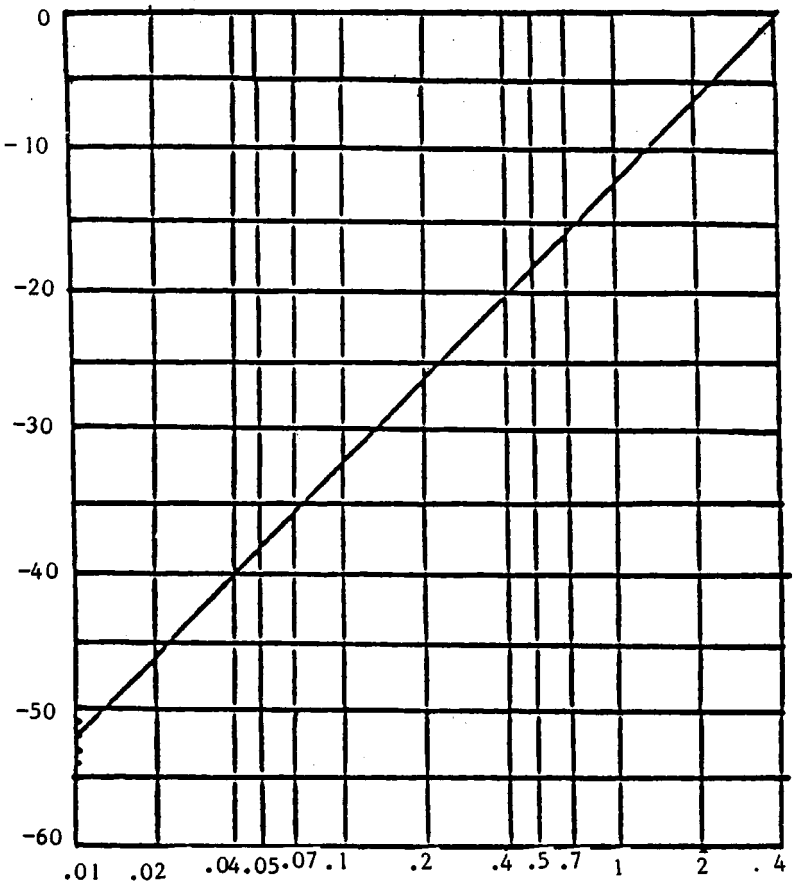

Frequency (f) in kHz

WEIGHTING FUNCTION RESPONSE

Fig. 68.308(a)

RESISTIVE TERMINATIONS
METALLIC RETURN
(MR SIMULATOR MODE 1)

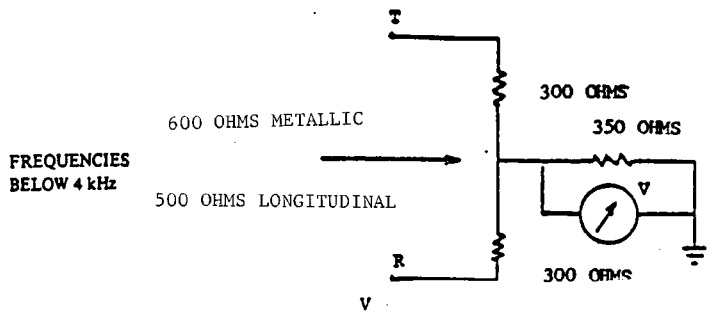

Longitudinal (db) = V(dB) + 3.1 dB

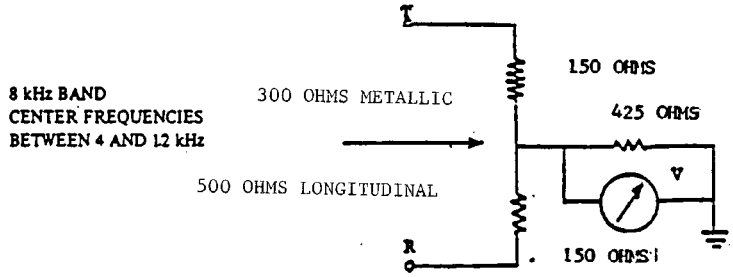

VLongitudinal (dB) = V(db) + 1.4 dB

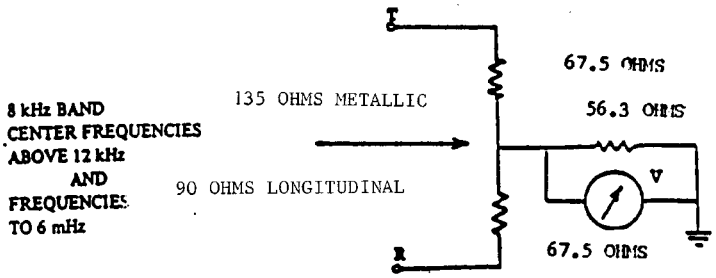

V Longitudinal (dB) = V(dB) + 4 dB

FIGURE 68.308(b)

RESISTIVE TERMINATIONS
GROUND RETURN
(MR SIMULATOR MODE 2)

BELOW 12 KHz

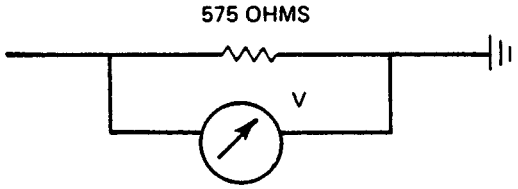

$V_{LONGITUDINAL} = V/2$ (dBV)

ABOVE 12 KHz

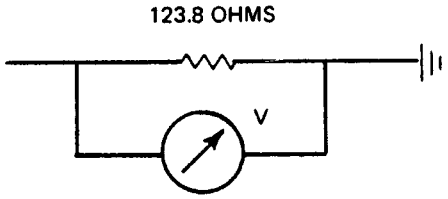

$V_{LONGITUDINAL} = V/2$ (dBV)

FIGURE 68.308(c)

ATTENUATION WEIGHTING CURVE

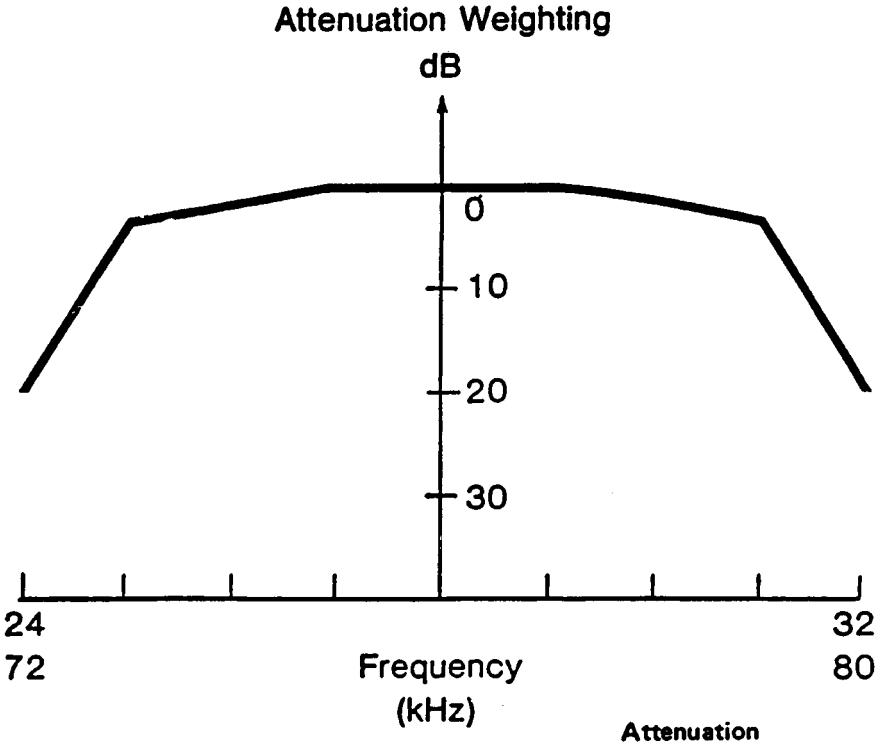

24-32 khz Band	72-80 khz Band	Attenuation Factor
24 khz	72 khz	-18 dB
25 khz	73 khz	- 3 dB
26 khz	74 khz	- 1 dB
27 khz	75 khz	0
28 khz	76 khz	0
29 khz	77 khz	0
30 khz	78 khz	- 1 dB
31 khz	79 khz	- 3 dB
32 khz	80 khz	-18 dB

Figure 68.308(d)

[45 FR 20853, Mar. 31, 1980, as amended at 46 FR 40192, Aug. 7, 1981; 47 FR 10219, Mar. 10, 1982; 47 FR 39687, Sept. 9, 1982; 49 FR 48721, Dec. 14, 1984; 50 FR 48210, Nov. 22, 1985; 51 FR 945, Jan. 9, 1986; 51 FR 16689, May 6, 1986; 61 FR 42392, Aug. 15, 1996]

EFFECTIVE DATE NOTE: At 61 FR 42392, Aug. 15, 1996, in § 68.308, paragraphs (a), (b)(7)(ii)(C), (h)(2) introductory text, (ii) Table III and the first sentence of (v) were revised; (b)(1)(viii), (2)(iii) and (h)(3) were added; (f)(2)(ii) table was amended by removing the words ''20 kHz'' and adding in its place the words ''120kHz'', effective Nov. 13, 1996. For the convenience of the user, the superseded text is set forth as follows:

§ 68.308 Signal power limitations.

(a) *General.* Limits on signal power shall be met at the interface for all 2-wire network ports and, where applicable to offered services, both transmit and receive pairs of all 4-wire network ports. Signal power measurements shall be made using terminations as specified in each of the following limitations. The transmit and receive pairs of 4-wire network ports shall be measured with the pair not under test connected to a termination equivalent to that specified for the pair under test. Through gain limitations apply only in the direction of transmission toward the network.

* * * * *

(b) * * *

(7) * * *

(ii) * * *

(C) Except for class A OPS interfaces, the dc current into the OPS line simulator circuit must be at least 20 mA for the following conditions (see Fig. 68.3(f)):

* * * * *

(h) * * *

(2) Limitations on Terminal Equipment Connecting to 1.544 Mbps Digital Services—

(i) * * *

(ii) * * *

TABLE III

Pulse height (volts)	2.4 to 3.3
Pulse width (half amplitude) (nsec)	324±45
Maximum rise or fall time: from 10% to 90% points (nsec)	100

* * * * *

(v) *Encoded analog content.* If registered terminal equipment connected to 1.544 Mbps digital service contains an analog-to-digital converter, or generates signals directly in digital form which are intended for eventual conversion into voiceband analog signals, the encoded analog content of the subrate channels within the 1.544 Mbps signal must be limited.

* * * * *

§ 68.310 Longitudinal balance limitations.

(a) *Technical description and application.* The metallic-to-longitudinal balance coefficient, $BALANCE_{m-1}$, is expressed as:

$$BALANCE_{m-1}=20\log_{10}\frac{e_M}{e_L}$$

where e_L is the longitudinal voltage produced across a 500-ohm longitudinal termination and e_M is the metallic voltage across the tip-ring or tip 1 and ring 1 interface of the input port when a voltage (at any frequency 200<f<4000 Hertz) is applied from a balanced 600-ohm metallic source. The source voltage should be set such that e_M=0.775 volts rms (0dBm) when a 600 ohm termination is substituted for the terminal equipment. The minimum balance coefficient specified in this section (as appropriate) shall be equalled or exceeded for all 2-wire network ports, OPS line ports and the transmit pair (tip and ring) and receive pair (tip 1 and ring 1) of all 4-wire network ports at all values of dc loop current that the port under test is capable of drawing when attached to the appropriate loop simulator circuit (see § 68.3). An illustrative test circuit that satisfies the above conditions is shown in Figure 68.310(a); other means may be used to determine the balance coefficient specified herein, provided that adequate documentation of the appropriateness, precision, and accuracy of the alternative means is provided by the applicant. The minimum balance requirements specified below shall be equalled or exceeded under all reasonable conditions of the application of earth ground to the equipment or protective circuitry under test:

Paragraph	Equipment state	Minimum balance	Frequency range
(b)	On-hook	60	200–1000
	On-hook	40	1000–4000
	Off-hook	40	200–4000
(c)	On-hook	60	200–1000
	On-hook	40	1000–4000
	Off-hook	40	200–4000
(d)	Off-hook	40	200–4000
(e)	On-hook	60	200–1000
Voice Equipment	On-hook	40	1000–4000
	Off-hook	40	200–4000
(e)	On-hook	60	200–1000
Data Equipment	On-hook	40	1000–4000
	Off-hook	40	200–4000
(f)	Off-hook	40	200–4000
(g)	On-hook	60	200–1000

Paragraph	Equipment state	Minimum balance	Frequency range
	On-hook	40	1000–4000
	Off-hook	40	200–4000
(h)	Off-hook	40	200–1000
(i)	On-hook	60	200–1000
	On-hook	40	1000–4000
	Off-hook	40	200–4000
(j)	Off-hook	40	200–4000

(b) *Registered one-port terminal equipment for 2-wire non-data applications with loop start, ringdown, inband signaling or voiceband metallic channels.* The one-port shall be driven from a 600-ohm metallic source having a 500-ohm longtitudinal impedance.

(c) *Registered one-port terminal equipment for 2-wire data applications with loop start, ringdown, inband signaling or voiceband metallic channels.* The one-port shall be driven from a 600-ohm metallic source having a 500-ohm longitudinal impedance.

(d) *Registered one-port equipment for ground-start and reverse-battery applications.* The one-port shall be driven from a 600-ohm metallic source having a 500-ohm longitudinal impedance.

(e) *Registered protective circuitry for 2-wire applications with loop start, ringdown, inband signaling or voiceband metallic channels.* These criteria shall be met with either terminal of the interface to other equipment connected to earth ground. The interface to other equipment shall be terminated in an impedance which will be reflected to the telephone connection as 600-ohms in the off-hook state of the registered protective circuit, and the interface should not be terminated in the on-hook state. Figure 68.310(e) shows the interface of the protective circuitry being tested and the required arrangement at the interface to other equipment.

(f) *Registered protective circuitry for ground-start and reverse-battery applications.* These criteria shall be met with either terminal of the interface to other equipment connected to earth ground. The interface to other equipment shall be terminated in an impedance which will be reflected to the telephone connection as 600-ohms in the off-hook state of the protective circuit. Figure 68.310(e) shows the interface of the protective circuitry under test and the required arrangement at the interface to the other equipment.

(g) *Registered multi-port equipment for loop-start applications.* These criteria shall be satisfied for all ports when the ports are terminated in their appropriate networks, as will be identified below, and when interface connections other than the ports are terminated in circuits appropriate to that interface. The minimum balance coefficients shall also be satisfied for all values of dc loop current that the registered equipment is capable of drawing through each of its ports when these ports are attached to the loop simulator circuit specified in these rules. The port under test shall be driven from a 600-ohm metallic source having a 500-ohm longitudinal impedance. The termination for all ports other than the particular one whose balance coefficient is being measured shall have a metallic impedance of 600 ohms and a longitudinal impedance of 500 ohms. Figure 68.310(g) shows this termination.

(h) *Registered multi-port equipment for ground start and reverse battery applications.* These criteria shall be satisfied for all ports when all ports not under test are terminated in their appropriate networks as will be identified below, and when interface connections other than the ports are terminated in circuits appropriate to that interface. The minimum balance coefficients shall be satisfied for all values of dc loop current that the registered equipment is capable of drawing through each of its ports when these ports are attached to the loop simulator circuit specified in these Rules. The port under test shall be driven from a 600-ohm metallic source having a 500-ohm longitudinal impedance. The terminations for all ports other than the particular one whose balance coefficient is being measured shall have a metallic impedance of 600 ohms and a longitudinal impedance of 500 ohms. Figure 68.310(g) shows this termination.

(i) *Registered terminal equipment and registered protective circuitry for 4-wire network ports.* The pair under test shall be driven from a 600-ohm metallic source having a 500-ohm longitudinal impedance. The pair not under test

shall be terminated in a metallic impedance of 600-ohms.

(1) *Registered protective circuitry for loop start, ground start, reverse, battery, ringdown, inband signaling or voiceband metallic channel applications.* These criteria shall be met with either terminal of the interface to other equipment connected to earth ground. The interface to other equipment shall be terminated in an impedance that will result in 600-ohms at each of the transmit and receive pairs of the 4-wire telephone connection in the off-hook state of the registered protective circuit, and the interface should not be terminated in the on-hook state. Figure 68.310(j) shows the interface of the protective circuitry being tested and the required arrangement at the interface to other equipment.

(2) *Registered multiport equipment for loop start, ground start, and reverse battery, ringdown, inband signaling, or voiceband metallic channel applications.* These criteria shall be satisfied for all network ports when the ports are terminated as defined below, and when interface connections other than network ports are terminated in circuits appropriate to the interface. The criteria shall also be satisfied for all values of dc loop current that the registered equipment is capable of drawing through each port when the port is connected to the appropriate 4-wire loop simulator circuit, Figure 68.3(c) or 68.3(d). The terminations for both pairs of all network ports not under test shall have a metallic impedance of 600-ohms and a longitudinal impedance of 500-ohms. Figures 68.310(g) shows this termination.

(j) *Registered PBX equipment (or similar systems) with Class B or Class C off-premises interfaces.* These criteria shall be satisfied for all off-premises station interface ports when these ports are terminated in their appropriate networks for their off-hook state, and when all other interface connections are terminated in circuits appropriate to that interface. The minimum balance coefficients shall also be satisfied for all values of dc loop current that the registered PBX is capable of providing through off-premises station ports when these ports are attached to the off-premises line simulator circuit specified in these rules. The port under test shall be driven from a 600-ohm metallic source having a 500-ohm longitudinal impedance.

(k) *Ringing type Z equipment for loop-start applications.* Equipment which has on-hook impedance characteristics which do not conform to the requirements of § 68.312 (e.g., ''Type Z''), need comply with a minimum balance requirement of 40 dB in the frequency range 200 to 400 Hertz, under the applicable subparagraph above. See § 68.312(f) for conditions upon registration of ''Type Z'' equipment.

(l) The maximum balance requirement for registered terminal equipment connected to digital services specified in Figure 68.310(k) shall be equaled or exceeded for the range of frequencies applicable for the equipment under test and under all reasonable conditions of the application of earth ground to the equipment. All such terminal equipment shall have a longitudinal balance in the acceptable region of Figure 68.310(k). The metallic termination used for the longitudinal balance measurements for 2.4, 4.8, 9.6, and 56 Kbps shall be 135 Ohms plus or minus one percent. The metallic termination used for the longitudinal balance measurements (M–L balance) for subrate, ISDN (BRA) and PSDS shall be 135 ohms +/− 1% and for 1.544 Mbps and ISDA (PRA) shall be 100 ohms +/− 1%. The longitudinal termination for these measurements (L–M balance) shall be 90 ohms in all cases.

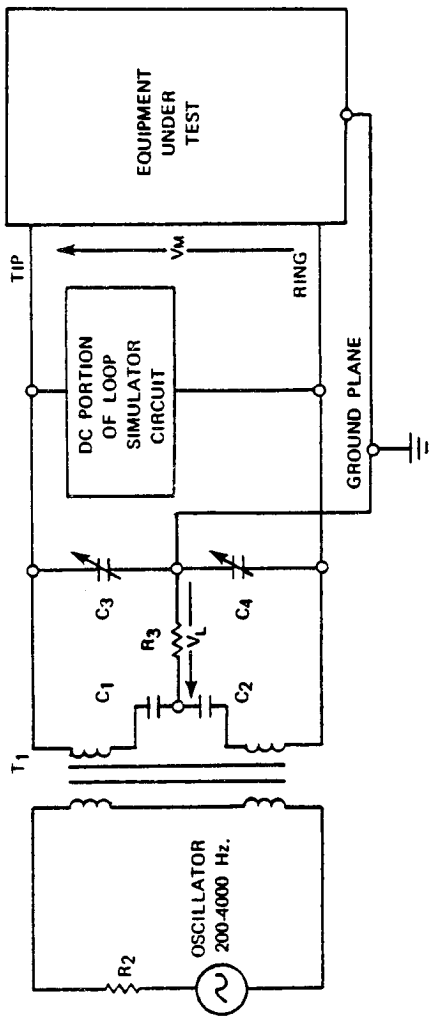

T_1 - W.E.Co. #111C or 119E, or A.D.C. #118F, or equivalent.
C_1, C_2 - 8 microfarad, 400 WVDC, matched to within 0.1%.
C_3, C_4 - 100 to 500 picofarad adjustable trimmer capacitors.
Osc. - Audio oscillator with source resistance, $R_1 \leq 600$ ohms.
R_2 - Selected such that $R_1 + R_2$ = ohms.
R_3 - 500 ohms.

NOTES:

1. V_M should not be measured at the same time as V_L.
2. Use trimmer capacitors C_3 and C_4 to balance the test circuit to 20 dB greater balance than the equipment standard for all frequencies specified, with a 600 ohm resistor substituted for the equipment under test.
3. Exposed conductive surfaces on the exterior of the equipment under test should be connected to the ground plane for this test.

Figure 68.310(a) - Illustrative test circuit complying with Section 68.310(a)

Required termination for connections to non-registered equipment:

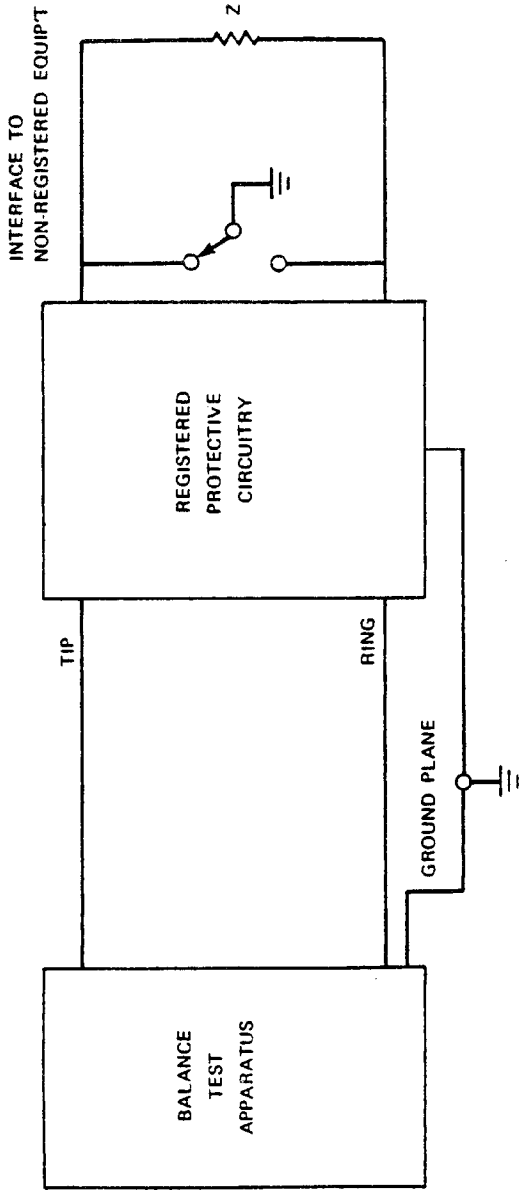

Z - selected so that the relected impedance at tip and ring is 600 ohms.

Figure 68.310(e)

Off-Hook Termination of Multi-port Equipment for Ports not under tests:

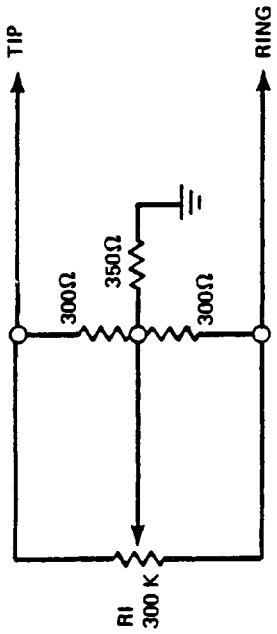

R_1 is used to adjust termination balance. Balance of this termination shall be adjusted to at least 60 dB between 200 and 1000 Hertz, and at least 40 dB between 1000 and 4000 Hertz.

Figure 68.310(g)

REQUIRED TERMINATION FOR CONNECTIONS TO NONREGISTERED EQUIPMENT:

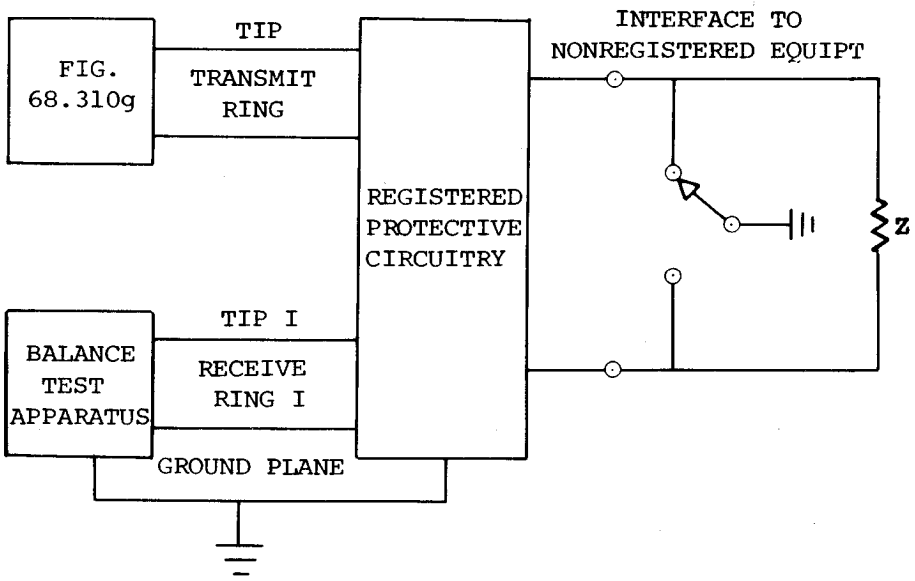

NOTE:

-Z- SELECTED SO THAT THE REFLECTED IMPEDANCE AT TIP I AND RING I IS 600 ohms.

-CONFIGURATION SHOWN IS FOR MEASUREMENT OF RECEIVE PAIR.

Fig. 68.310 (j)
4 Wire

LONGITUDINAL BALANCE REQUIREMENT FOR DIGITAL SERVICES

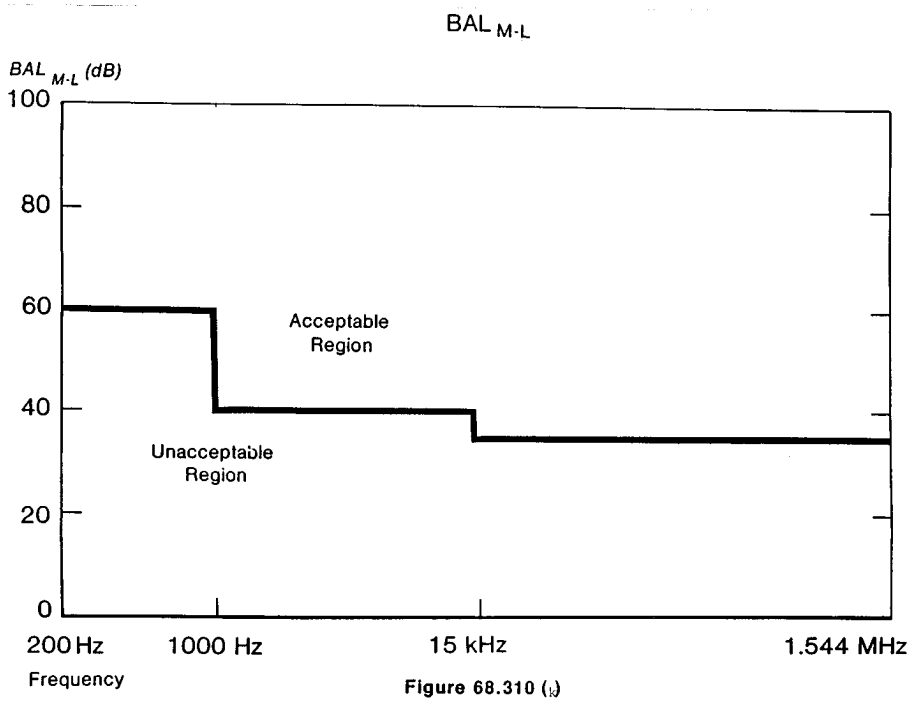

Figure 68.310 (l)

[45 FR 20853, Mar. 31, 1980, as amended at 45 FR 54343, Aug. 15, 1980; 45 FR 61632, Sept. 17, 1980; 47 FR 39687, Sept. 9, 1982; 49 FR 48724, Dec. 14, 1984; 51 FR 950, Jan. 9, 1986; 51 FR 16690, May 6, 1986; 61 FR 42393, Aug. 15, 1996]

EFFECTIVE DATE NOTE: At 61 FR 42393, Aug. 15, 1996, in § 68.310, paragraphs (a) table, (i) introductory text and (l) were revised, effective Nov. 13, 1996. For the convenience of the user, the superseded text is set forth as follows:

§ 68.310 Longitudinal balance limitations.

(a) * * *

Paragraph and equipment state	Minimum balance requirement dB	Frequency range Hz
(b):		
Both on-hook	60	200–1000
and off-hook	40	1000–4000
(c):		
On-hook	60	200–1000
	40	1000–4000
Off-hook	40	200–4000
(d) Off-hook	40	200–4000
(e) Voice equipment:		
Both on-hook	60	200–1000
and off-hook	40	1000–4000
(e) Data Equipment:		
On-hook	60	200–1000
	40	1000–4000
Off-hook	40	200–4000
(f) Off-hook	40	200–4000
(g):		
Both on-hook	60	200–1000
and off-hook	40	1000–4000
(h) Off-hook	40	200–4000
(i):		
Both on-hook	60	200–1000
and off-hook	40	1000–4000
(j) Off-hook	40	200

* * * * *

(i) *Registered terminal equipment and registered protective circuitry for 4-wire network ports.* The pair under test shall be driven from a 600-ohm metallic source having a 500-ohm longitudinal impedance. The pair not

under test shall be terminated in a metallic impedance of 500-ohms. Other conditions are as follows:

* * * * *

(l) The maximum balance requirements for registered terminal equipment connected to digital services specified in Figure 68.310(k) shall be equaled or exceeded for the range of frequencies applicable for the equipment under test and under all reasonable conditions of the application of earth ground to the equipment. All such terminal equipment shall have a longitudinal balance in the acceptable region of Figure 68.310(k). The metallic termination used for the longitudinal balance measurements for 2.4, 4.8, 9.6, and 56 Kbps shall be 135 Ohms plus or minus one percent and for 1.544 Mbps shall be 100 Ohms plus or minus one percent. The longitudinal termination for these measurements shall be 500 Ohms in all cases.

* * * * *

§68.312 On-hook impedance limitations.

(a) *General.* The limitations in this section that involve 2-wire network ports apply to tip and ring of the public switched network. For 4-wire network ports (tip, ring, tip 1, and ring 1) with loop-start or ground-start signaling, the limitations apply when tip and ring conductors are connected together and treated as one of the conductors of a tip and ring pair and the tip 1 and ring 1 conductors are connected together and treated as the other conductor of a tip and ring pair.

(b) Limitations on individual equipment intended for operation on loop-start telephone facilities, including PSDS Type II in the analog mode:

(1) Registered terminal equipment and registered protective circuitry shall conform to the following limitations, for each Ringing Type which is listed as part of its Ringer Equivalence:

(i) The dc resistance between tip and ring conductors, and between each of the tip and ring conductors and earth ground, shall be greater than 5 megohms for all dc voltages up to and including 100 volts.

(ii) The dc resistance between tip and ring conductors, and between each of the tip and ring conductors and earth ground shall be greater than 30 kilohms for all dc voltages between 100 and 200 volts.

(iii) During the application of simulated ringing, as listed in Table I below, the total dc current, shall not exceed 3.0 milliamperes.

(iv) During the application of simulated ringing, as listed in Table I below, the impedance between the tip and ring conductors (defined as the quotient of applied ac voltage divided by resulting true rms current) shall be greater than the value specified in Table I. Except as provided in paragraph (b)(2) of this section, such impedance shall be less than 40 kilohms.

(v) During the application of simulated ringing, as listed in Table I below, the impedance between each of the tip and ring conductors and ground shall be greater than 100 kilohms.

(2) Registered terminal equipment and registered protective circuitry intended for use on facilities which will always have ringing detection circuitry in use at the same time such registered terminal equipment and registered protective circuitry is connected need not comply with the 40 kilohms maximum impedance specification of paragraph (b)(1)(v) of this section.

(c) *Limitations on individual equipment intended for operation on ground-start telephone facilities.* Registered terminal equipment and registered protective circuitry shall conform to the following limitations for each Ringing Type which is listed as part of its Ringer Equivalence Number:

(1) During the application of simulated ringing, as listed in Table I below, the total dc current flowing between tip and ring conductors shall not exceed 3.0 milliamperes.

(2) During the application of simulated ringing, as listed in Table I below, the total impedance of the parallel combination of the ac impedance across tip and ring conductors and the ac impedance from the ring conductor to ground (with ground on the tip conductor) shall be greater than the value specified in Table I. Except as provided in paragraph (b)(2) of this section, such impedance shall be less the 40 kilohms.

(d) *Ringer equivalence definition.* The values of each of the parameters for

which a limitation is imposed in paragraph (b) or (c) of this section, as appropriate, shall be determined for a representative unit under test. Quotients of each such value shall be formed according to the following:

(1) For individual equipment intended for operation on loop-start telephone facilities:

(i) 25 megohms divided by the minimum measured on-hook dc resistance for all dc voltages up to and including 100 volts.

(ii) 150 kilohms divided by the minimum measured on-hook dc resistance for all dc voltages between 100 and 200 volts.

(iii) The maximum total dc current flowing between tip and ring during the application of simulated ringing as listed in Table I below, in milliamperes, divided by 0.6 milliamperes.

(iv) Five times the impedance limitation listed in Table I, below, divided by the minimum measured ac impedance, defined as in paragraph (b)(1)(iv) of this section, during the application of simulated ringing as listed in Table I.

(2) For individual equipment intended for operation on ground-start telephone facilities:

(i) The maximum total dc current flowing between tip and ring conductors during the application of simulated ringing as listed in Table I below, in milliamperes, divided by 0.6 milliamperes.

(ii) Five times the impedance limitation listed in Table I below divided by the minimum measured ac impedance, defined in paragraph (b)(2) of this section, during the application of simulated ringing as listed in Table I.

The largest of the unitless quotients so formed, followed by the Ringing Type letter indicator representing the frequency range for which that number is valid, is the Ringer Equivalence. If Ringer Equivalence is to be stated for more than one Ringing Type, testing shall be performed at each frequency range to which Ringer Equivalence is to be determined in accordance with the above, and the largest resulting Ringer Equivalence number so determined will be associated with each Ringing Type letter designation for which it is valid.

(e) Registered terminal equipment and registered protective circuitry shall have at least one ringer equivalence number shown on the registration label. Where options that will vary the ringer equivalence are involved, either each option that results in a ringer equivalence number greater than 0.1 and its corresponding Ringer Equivalence shall be listed on the registration label, or the largest ringer equivalence number that can result from such options shall be stated on the label. A trained, authorized agent of the Grantee may disconnect ringers, bridge ringers to another line, or execute options affecting ringer equivalence after the telephone company has been notified in accordance with § 68.106.

(f) All registered terminal equipment and registered protective circuitry which can affect on-hook impedance shall be assigned a Ringer Equivalence. The sum of all such ringer equivalences on a given telephone line or loop shall not exceed 5; in some cases, a system which has a total ringer equivalence of 5 or less may not be usable on a given telephone line or loop.

(g) *Ringing type Z equipment.* Equipment which has on-hook impedance characteristics which do not conform to the requirements of this section may be conditionally registered, notwithstanding the requirements of this section, provided that it is labelled with a Ringing Type designation ''Z''. It should be noted that registration of equipment bearing the designation ''Z'' does *not* necessarily confer any right of connection to the telephone network under these rules; any equipment registered with the type Z designation may only be used with the consent of the local telephone company, provided that the local telephone company does not discriminate in its treatment of equipment bearing the type Z designation.

(h) Limitations on PBX equipment with an off-premises interface and direct inward dialing (DID). PBX ringing supplies whose output appears on the off-premises interface leads shall not trip when connected to the following tip-to-ring impedance which terminates the off-premises station loop:

Ringing frequency Hz	ac impedance ohms	
	Class B, or C	Class A
20±3	7000/N	1400
30±3	5000/N	1000

N—Number of ringer equivalences, as specified by the manufacturer, which can be connected to the off-premises station loop.

(i) Limitations on individual equipment intended for operation with message register signaling channels:

(1) Registered terminal equipment and registered protective circuitry shall conform to the following limitations in all operating states.

(2) The dc resistance between each of the tip (*MR*) and ring (*MR*) conductors and ground shall be greater than 30 kilohms for voltages up to and including 200 volts.

(j) Limitations on individual equipment ports with ringdown or inband signaling or voiceband metallic channels for connection to voiceband private line interfaces.

(1) Registered terminal equipment and registered protective circuitry with 2-wire ports for ringdown, inband signaling or voiceband metallic channels shall provide a dc resistance between tip and ring conductors and between each of the tip and ring conductors and earth ground greater than 30 kilohms for all dc voltages up to and including 200 volts.

(2) Registered terminal equipment and registered protective circuitry with 4-wire ports for ringdown, inband signaling or voiceband metallic channels shall provide a dc resistance between each of the tip, ring, tip 1 and ring 1 conductors and earth ground greater than 30 kilohms for all dc voltages up to and including 200 volts.

(k) Registered terminal equipment and registered protective circuitry shall not by design leave the on-hook state by operations performed on tip and ring leads for any other purpose than to request service or answer an incoming call, except that terminal equipment which the user places in the off-hook state for the purpose of manually placing telephone numbers in internal memory for subsequent automatic or repertory dialing shall be registrable. Make-busy indications shall be transmitted by the use of make-busy leads only as defined in §§ 68.3 and 68.200(j).

TABLE I

Ringing type	Range of compatible ringing frequencies Hz	Simulated ringing voltage superimposed 56.5 volts dc	Impedance limitation (ohms)
A	20 ± 3	40 to 130 volts rms	1400
	30 ± 3	40 to 130 volts rms	1000
B	15.3 to 68.0	40 to 150 volts rms	1600
C	15.3 to 17.4	54 to 120 volts rms	1600
D	19.3 to 20.7 [1] (frequency-selective).	54 to 120 volts rms	1600
E	24.3 to 25.7	54 to 120 volts rms	1600
F	29.3 to 30.7 [1] (frequency-selective).	54 to 120 volts rms	1600
G	32.6 to 34.0	54 to 130 volts rms	1600
H	39.2 to 40.9	62 to 130 volts rms	1600
J	41.0 to 43.0	62 to 130 volts rms	1600
K	49.0 to 51.0	62 to 140 volts rms	1600
L	52.9 to 55.1	62 to 140 volts rms	1600
M	58.8 to 61.2	68 to 150 volts rms	1600
N	65.4 to 68.0	68 to 150 volts rms	1600
P	15.3 to 34.0	54 to 130 volts rms	1600
Q	20 ± 3	40 to 130 volts rms	1400

[1] NOTE: Requirements at these frequencies, which are identical to Type A frequencies, are not consistent with the Type A requirements; equipment intended for use both on Type A facilities and facilities using frequency-selective ringing must comply with the requirements on Types A, D and F independently.

[45 FR 20853, Mar. 31, 1980, as amended at 45 FR 61632, Sept. 17, 1980; 45 FR 79486, Dec. 1, 1980; 46 FR 40192, Aug. 7, 1981; 48 FR 34044, July 27, 1983; 51 FR 950, Jan. 9, 1986; 51 FR 28237, Aug. 6, 1986; 61 FR 42394, Aug. 15, 1996; 61 FR 47434, Sept. 9, 1996]

EFFECTIVE DATE NOTE: At 61 FR 42394, Aug. 15, 1996, in § 68.312, paragraphs (b) introductory text, (2) and (h) introductory text were revised, effective Nov. 13, 1996. For the convenience of the user, the superseded text is set forth as follows:

§ 68.312 On-hook impedance limitations.

* * * * *

(b) Limitations on individual equipment intended for operation on loop-start telephone facilities:

* * * * *

(2) Registered terminal equipment and registered protective circuitry intended for use on facilities which always will have additional ringing detection circuitry in use at the same time such registered terminal equipment and registered protective circuitry is connected need not comply with the

40 kilohm maximum impedance specification of paragraph (a)(1)(v) of this section.

* * * * *

(h) Limitations on PBX equipment with an off-premises interface and direct inward dialing (DID).

* * * * *

§ 68.314 Billing protection.

(a) *Call duration requirements on data equipment connected to the public switched network, or to tie trunks, or to private lines that access the public switched network.* Registered data terminal equipment and registered protective circuitry shall comply with the following requirements when answering an incoming call, except in off-hook states in which the signals are transmitted and/or received by electroacoustic transducers only:

NOTE: This paragraph (a) will be applicable to terminal equipment and registered protective circuitry employed with digital services where such digital services are interconnected with the analog telephone network.

(1) *Registered protective circuitry.* Registered protective circuitry connected to associated data equipment shall assure that the following signal power limitations are met for at least 2 seconds after the off-hook condition is presented to the telephone network in response to an incoming call:

(i) Signals that appear at the protective circuitry/telephone network interface for delivery to the telephone network shall be limited to −55 dB with respect to one milliwatt as such signals are delivered into a loop simulator circuit or a 600 ohm termination, as appropriate; and

(ii) Signals that appear at the protective circuitry-associated data equipment interface for delivery to associated data equipment shall be limited as follows: for any received signal power (appearing at the protective circuitry-telephone network interface) up to 0 dB with respect to one milliwatt (at any frequency in the range of 200 to 3200 Hertz), the power of signals delivered to associated data equipment shall be no greater than the signal power that would be delivered as a result of received signal power of −55 dB with respect to one milliwatt.

(2) *Registered terminal equipment.* Registered terminal equipment for data applications shall assure that, when an incoming telephone call is answered, the answering terminal equipment prevents both transmission and reception of data for at least 2 seconds after the answering terminal equipment transfers to the off-hook condition. For the purpose of this requirement, a fixed sequence of signals that is transmitted (and originated within) and/or received by the registered terminal equipment each time it answers an incoming call shall not be considered data, provided that such signals are for one or more of the following purposes:

(i) Disabling echo control devices,

(ii) Adjusting automatic equalizers and gain controls,

(iii) Establishing synchronization, or

(iv) Signaling the presence and if required, the mode of operation, of the data terminal at the remote end of a connection.

(b) *Voice and data equipment on-hook signal requirements for equipment connected to the public switched network, or to tie trunks, or to private lines that access the public switched network.* Registered protective circuitry and registered terminal equipment shall comply with the following:

(1) The power delivered into a 2-wire loop simulator circuit or into the transmit and receive pairs of a 4-wire loop simulator or into a 600 ohm termination (where appropriate) in the on-hook state, by loop-start or ground-start equipment shall not exceed −55dB with respect to one milliwatt within the frequency band from 200 to 4000 Hertz. Registered protective circuitry shall also assure that for any input level up to 10dB above the maximum level that is expected under normal operation, the power to a 2-wire loop simulator circuit or the transmit and receive pairs of a 4-wire loop simulator circuit or into a 600 ohm termination (where appropriate) does not exceed the above limits.

(2) The power delivered into a 2-wire loop simulator circuit or into the transmit and receive pairs of a 4-wire loop simulator circuit, in the on-hook state, by reverse battery equipment

shall not exceed −55dB with respect to one milliwatt, unless the equipment is arranged to inhibit incoming signals.

(c) *Voice and data equipment loop current requirements for equipment connected to the Public Switched network.* The loop current through registered terminal equipment or registered protective circuitry, when connected to a 2-wire or 4-wire loop simulator circuit with the 600 ohm resistor and 500 microfarad capacitor of the 2-wire loop simulator circuit or both pairs of the 4-wire loop simulator circuit disconnected shall, for at least 5 seconds after the equipment goes to the normal off-hook state which would occur in response to ringing (called party condition):

(1) Be at least as great as the current obtained in the same loop simulator circuit with a 200 ohm resistance connected across the tip and ring of the 2-wire loop simulator circuit or connected across the tip/ring and tip 1/ring 1 conductors (tip and ring connected together and tip 1 and ring 1 connected together) of the 4-wire loop simulator circuit in place of the registered terminal equipment or registered protective circuitry; or

(2) Not decrease by more than 25 percent from its maximum value attained during this 5-second interval; unless the equipment is returned to the on-hook state during the above 5 second interval.

(d) *Signaling interference requirements.* (1) Terminal equipment connected to the Public Switched Network or private lines identified in § 68.2(a) (2) and (3). Registered terminal equipment and registered protective circuitry shall not deliver signals into a 2-wire loop simulator circuit or the transmit and receive pairs of a 4-wire loop simulator circuit or a 600-ohm termination (where appropriate) from sources internal to the registered equipment or circuitry, with energy in the 2450 to 2750 Hertz band unless an equal amount of energy is presented in the 800 to 2450 Hertz band.

(2) Registered terminal equipment for connection to subrate or 1.544 Mbps digital services shall not deliver digital signals to the telephone network with encoded analog content energy in the 2450 to 2750 Hertz band unless at least an equal amount of encoded analog energy is present in the 800 to 2450 Hertz band.

(e) *Operating requirements for automatic identified outward dialing*—(1) *General.* Registered terminal equipment that provides Automatic Identified Outward Dialing (AIOD) features shall meet those operating requirements necessary to ensure compatibility with the local telephone company serving central office. A sufficient set of operating characteristics for interfacing with central office AIOD channels is contained in the Electronics Industries Association (EIA) Standard RS–464, Section 4.4.1., dated December 1979.

(2) *Station number assignment.* Station number assignments in registered terminal equipment with AIOD capabilities, including spare numbers for subsequent activities by the customer, must be programed into the equipment by a qualified installer only and such numbers must be restricted to the group of station numbers provided by the telephone company. If the registered terminal equipment is arranged so that the customer can reassign and/or activate new station numbers, means shall be provided so that the customer can verify that the 4-digit number assigned to a station set, incoming tie trunk, or the attendant for AIOD purposes is the same as the number identified by the registered terminal equipment for AIOD when an outgoing call to a central office is originated.

(f) *On-hook signal requirements for registered terminal equipment for connection to subrate or 1.544 Mbps digital services.* Registered terminal equipment and registered protective circuitry shall comply with the following:

(1) The power delivered to the telephone network in the on-hook state as derived by a zero level decoder shall not exceed −55 dBm equivalent power for digital signals within the frequency band from 200 to 4000 Hertz. Registered protective circuitry shall also assure that for any input level up to 10 dB above the maximum level that is expected under normal operation, the power to a zero level decoder does not exceed the above limits.

(2) The power derived by a zero level decoder, in the on-hook state, by reverse battery equipment shall not exceed −55 dB with respect to one milliwatt, unless the equipment is arranged to inhibit incoming signals.

(g) *Off-hook signal requirements for registered terminal equipment connecting to 1.544 Mbps digital services.* Upon entering the normal off-hook state, in response to alerting, for analog subrate channels, registered terminal equipment shall continue to transmit the signaling bit sequence representing the off-hook state for 5 seconds, unless the equipment is returned to the on-hook state during the above 5 second interval.

(h) Operating Requirements for Direct-Inward-Dialing (''DID''). (1) Answer supervision for DID calls to stations connected to the telephone company network through a Private Branch Exchange or similar system (''PBX'') shall be returned to the central office on all calls which are:

(i) Answered by the called DID station,

(ii) Answered by an attendant,

(iii) Routed to an announcement, except for ''number invalid,'' ''not in service,'' or ''not assigned'' recordings,

(iv) Routed to a dialing prompt, or

(v) Routed back to the public switched network by the PBX, including calls routed to ''number invalid,'' ''not in service,'' or ''not assigned'' recordings.

(2) DID calls which do not require the PBX to return answer supervision are those:

(i) Which are not routed back to the public switched network and, in addition, are:

(A) Unanswered, i.e., the called DID station receives a ring or other alerting signal, but does not answer, or the DID station to which the call is forwarded receives a ring or other alerting signal, but does not answer,

(B) Routed to a busy signal,

(C) Routed to a reorder signal, or

(D) Routed to a recorded announcement stating ''number invalid,'' ''not in service,'' or ''not assigned''; and those

(ii) Which are routed back to the public switched network and, in addition, are:

(A) Unanswered, i.e., the called station receives a ring or other alerting signal, but does not answer, or the DID station to which the call is forwarded receives a ring or other alerting signal, but does not answer,

(B) Routed to a busy signal, or

(C) Routed to a reorder signal.

(3) Answer supervision on DID calls shall be provided in accordance with industry engineering standards.

(4) PBX and similar systems manufactured one year from December 31, 1990, shall comply with the paragraph. PBX and similar systems of earlier manufacture shall comply with the paragraph if newly installed or relocated on a customer's premises eighteen months from December 31, 1990, or any time thereafter. Such equipment must be reregistered by the manufacturer or other person responsible for equipment compliance with part 68, if already registered but not compliant with this paragraph (h). Compliance with the paragraph shall require that the equipment be designed, manufactured and installed so that it will return answer supervision in conformity with this rule in a manner which cannot be readily altered by software control or other user controlled media.

(5) As used in this § 68.314(h), *Private Branch Exchange or similar system* (''PBX'') means customer premises equipment, such as private branch exchanges, key equipment, multifunction systems, multiplexers, and any equipment for which adopted industry standard signalling is the standard mode of returning answer supervision.

[45 FR 20853, Mar. 31, 1980, as amended at 47 FR 10219, Mar. 10, 1982; 47 FR 39687, Sept. 9, 1982; 47 FR 42750, Sept. 29, 1982; 49 FR 48725, Dec. 14, 1984; 50 FR 27251, July 2, 1985; 51 FR 950, Jan. 9, 1986; 51 FR 16690, May 6, 1986; 55 FR 46066, Nov. 1, 1990]

§ 68.316 Hearing aid compatibility magnetic field intensity requirements: technical standards.

A telephone handset is hearing aid compatible for the purposes of this section if it complies with the following standard, published by the Telecommunications Industry Association, copyright 1983, and reproduced by permission of the Telecommunications Industry Association:

ELECTRONIC INDUSTRIES ASSOCIATION RECOMMENDED STANDARD RS–504 MAGNETIC FIELD INTENSITY CRITERIA FOR TELEPHONE COMPATIBILITY WITH HEARING AIDS

[Prepared by EIA Engineering Committee TR–41 and the Hearing Industries Association's Standards and Technical Committee]

TABLE OF CONTENTS

List of Illustrations

1 INTRODUCTION
2 SCOPE
3 DEFINITIONS
4 TECHNICAL REQUIREMENTS
4.1 General
4.2 Axial Field Intensity
4.3 Radial Field Intensity
4.4 Induced Voltage Frequency Response
Appendix A—Bibliography

List of Illustrations

Figure Number

1 Reference and Measurement Planes and Axes
2 Measurement Block Diagram
3 Probe Coil Parameters
4A Induced Voltage Frequency Response for receivers with an axial field that exceeds −19 dB
4B Induced Voltage Frequency Response for receivers with an axial field that exceeds −22 dB but is less than −19 dB

Magnetic Field Intensity Criteria for Telephone Compatibility With Hearing Aids

(From EIA Standards Proposal No. 1652, formulated under the cognizance of EIA TR–41 Committee on Voice Telephone Terminals and the Hearing Industries Association's Standards and Technical Committee.)

1 Introduction

Hearing-aid users have used magnetic coupling to enable them to participate in telephone communications since the 1940's. Magnetic pick-ups in hearing-aids have provided for coupling to many, but not all, types of telephone handsets. A major reason for incompatibility has been the lack of handset magnetic field intensity requirements. Typically, whatever field existed had been provided fortuitously rather than by design. More recently, special handset designs, e.g., blue grommet handsets associated with public telephones, have been introduced to provide hearing-aid coupling and trials were conducted to demonstrate the acceptability of such designs. It is anticipated that there will be an increase in the number of new handset designs in the future. A standard definition of the magnetic field intensity emanating from telephone handsets intended to provide hearing-aid coupling is needed so that hearing-aid manufacturers can design their product to use this field, which will be guaranteed in handsets which comply with this standard.

1.1 This standard is one of a series of technical standards on voice telephone terminal equipment prepared by EIA Engineering Committee TR–41. This document, with its companion standards on Private Branch Exchanges (PBX), Key Telephone Systems (KTS), Telephones and Environmental and Safety Considerations (Refs: A1, A2, A3 and A4) fills a recognized need in the telephone industry brought about by the increasing use in the public telephone network of equipment supplied by numerous manufacturers. It will be useful to anyone engaged in the manufacture of telephone terminal equipment and hearing-aids and to those purchasing, operating or using such equipment or devices.

1.2 This standard is intended to be a living document, subject to revision and updating as warranted by advances in network and terminal equipment technology and changes in the FCC Rules and Regulations.

2 Scope

2.1 The purpose of this document is to establish formal criteria defining the magnetic field intensity presented by a telephone to which hearing aids can couple. The requirements are based on present telecommunications plant characteristics at the telephone interface. The telephone will also be subject to the applicable requirements of EIA RS–470, Telephone Instruments with Loop Signaling for Voiceband Applications (Ref: A3) and the environmental requirements specified in EIA Standards Project PN–1361, Environmental and Safety Considerations for Voice Telephone Terminals, when published (Ref: A4).

Telephones which meet these requirements should ensure satisfactory service to users of magnetically coupled hearing-aids in a high percentage of installations, both initially and over some period of time, as the network grows and changes occur in telephone serving equipment. However, due to the wide range of customer apparatus and loop plant and dependent on the environment in which the telephone and hearing aid are used, conformance with this standard does not guarantee acceptable performance or interface compatibility under all possible operating conditions.

2.2 A telephone complies with this standard if it meets the requirements in this standard when manufactured and can be expected to continue to meet these requirements when properly used and maintained. For satisfactory service a telephone needs to be capable, through the proper selection of equipment options, of satisfying the requirements applicable to its marketing area.

2.3 The standard is intended to be in conformance with part 68 of the FCC Rules and Regulations, but it is not limited to the scope of those rules (Ref: A5).

2.4 The signal level and method of measurement in this standard have been chosen to ensure reproducible results and permit comparison of evaluations. The measured magnetic field intensity will be approximately 15 dB above the average level encountered in the field and the measured high-end frequency response will be greater than that encountered in the field.

2.5 The basic accuracy and reproducibility of measurements made in accordance with this standard will depend primarily upon the accuracy of the test equipment used, the care with which the measurements are conducted, and the inherent stability of the devices under test.

3 Definitions

This section contains definitions of terms needed for proper understanding and application of this standard which are not believed to be adequately treated elsewhere. A glossary of telephone terminology, which will be published as a companion volume to the series of technical standards on Telephone Terminals For Voiceband Applications, is recommended as a general reference and for definitions not covered in this section.

3.1 A telephone is a terminal instrument which permits two-way, real-time voice communication with a distant party over a network or customer premises connection. It converts real-time voice and voiceband acoustic signals into electrical signals suitable for transmission over the telephone network and converts received electrical signals into acoustic signals. A telephone which meets the requirements of this standard also generates a magnetic field to which hearing-aids may couple.

3.2 The telephone boundaries are the electrical interface with the network, PBX or KTS and the acoustic, magnetic and mechanical interfaces with the user. The telephone may also have an electrical interface with commercial power.

3.3 A hearing aid is a personal electronic amplifying device, intended to increase the loudness of sound and worn to compensate for impaired hearing. When equipped with an optional inductive pick-up coil (commonly called a telecoil), a hearing aid can be used to amplify magnetic fields such as those from telephone receivers or induction-loop systems.

3.4 The reference plane is the planar area containing points of the receiver-end of the handset which, in normal handset use, rest against the ear (see Fig 1).

3.5 The measurement plane is parallel to, and 10 mm in front of, the reference plane (see Fig 1).

3.6 The reference axis is normal to the reference plane and passes through the center of the receiver cap (or the center of the hole array, for handset types that do not have receiver caps).

3.7 The measurement axis is parallel to the reference axis but may be displaced from that axis, by a maximum of 10 mm (see Fig 1). Within this constraint, the measurement axis may be located where the axial and radial field intensity measurements, are optimum with regard to the requirements. In a handset with a centered receiver and a circularly symmetrical magnetic field, the measurement axis and the reference axis would coincide.

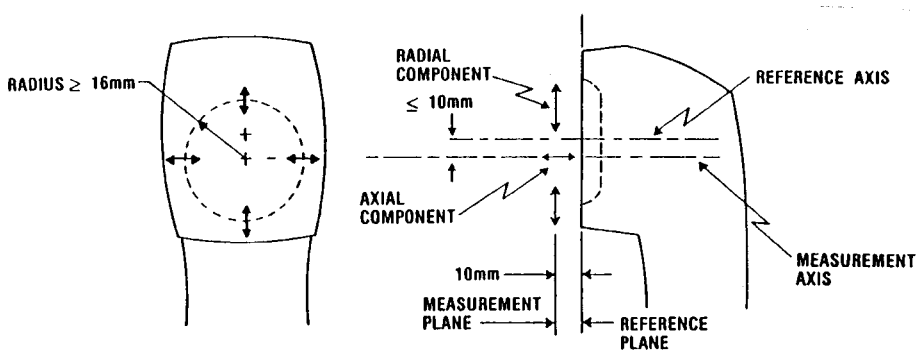

FIG 1 REFERENCE AND MEASUREMENT PLANES AND AXES

4 Technical Requirements

4.1 *General.*

These criteria apply to handsets when tested as a constituent part of a telephone.

4.1.1 Three parameters descriptive of the magnetic field at points in the measurement plane shall be used to ascertain adequacy for magnetic coupling. These three parameters are intensity, direction and frequency response, associated with the field vector.

4.1.2 The procedures for determining the parameter values are defined in the IEEE Standard Method For Measuring The Magnetic Field Intensity Around A Telephone Receiver (Ref: A6), with the exception that this EIA Recommended Standard does not require that the measurements be made using an equivalent loop of 2.75 km of No. 26 AWG cable, but uses a 1250–ohm resistor in series with the battery feed instead (see Fig 2).

4.1.3 When testing other than general purpose analog telephones, e.g., proprietary or digital telephones, an appropriate feed circuit and termination shall be used that produces equivalent test conditions.

4.2 *Axial Field Intensity.*

When measured as specified in 4.1.2, the axial component of the magnetic field directed along the measurement axis and located at the measurement plane, shall be greater than −22 dB relative to 1 A/m, for an input of −10 dBV at 1000 Hz (see Fig 2).

NOTE: If the magnitude of the axial component exceeds −19 dB relative to 1 A/m, some relaxation in the frequency response is permitted (See 4.4.1).

4.3 *Radial Field Intensity.*

When measured as specified in 4.1.2, radial components of the magnetic field as measured at four points 90° apart, and at a distance ≥16 mm from the measurement axis (as selected in 4.2), shall be greater than −27 dB relative to 1 A/m, for an input of −10 dBV at 1000 Hz (see Fig 2).

4.4 *Induced Voltage Frequency Response.*

The frequency response of the voltage induced in the probe coil by the axial component of the magnetic field as measured in 4.2, shall fall within the acceptable region of Fig 4A or Fig 4B (see 4.4.1 and 4.4.2), over the frequency range 300-to-3300 Hz.

4.4.1 For receivers with an axial component which exceeds −19 dB relative to 1 A/m, when measured as specified in 4.1.2, the frequency response shall fall within the acceptable region of Fig 4A.

4.4.2 For receivers with an axial component which is less than −19 dB but greater than −22 dB relative to 1 A/m, when measured as specified in 4.1.2, the frequency response shall fall within the acceptable region of Fig 4B.

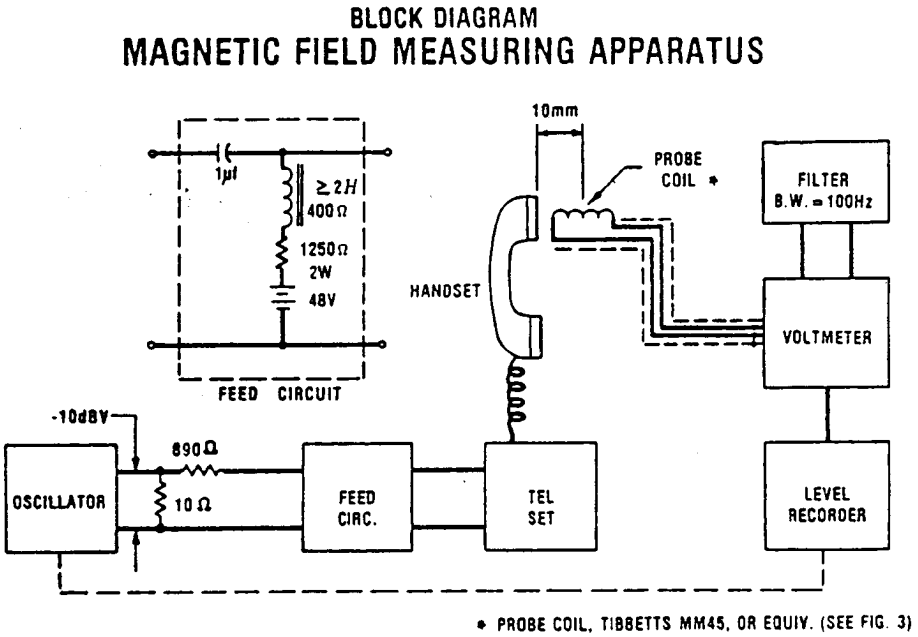

FIG 2 MEASUREMENT BLOCK DIAGRAM

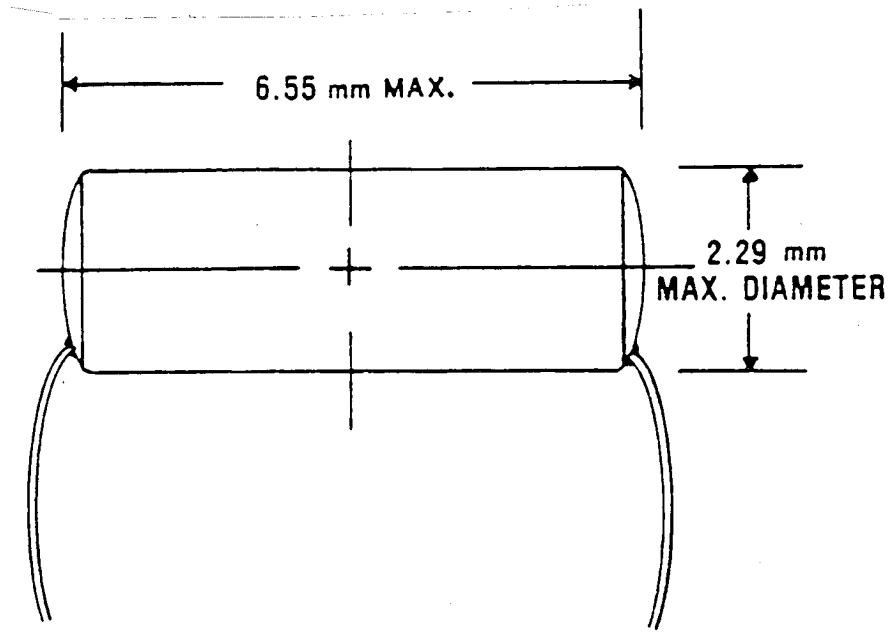

TYPICAL PARAMETERS OF PROBE COIL

DC RESISTANCE: 900 Ω
INDUCTANCE: 140 mH
SENSITIVITY: -60.5 dBV/(A/m)

FIG 3 PROBE COIL PARAMETERS

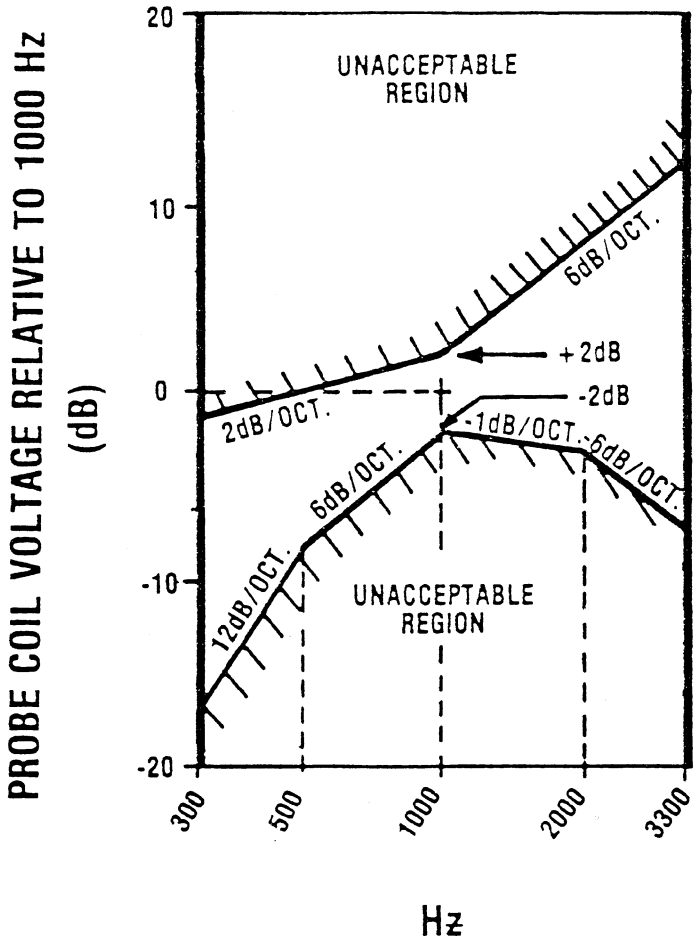

FIG 4A INDUCED VOLTAGE FREQUENCY RESPONSE
FOR RECEIVERS WITH AN AXIAL FIELD THAT EXCEEDS -19 dB

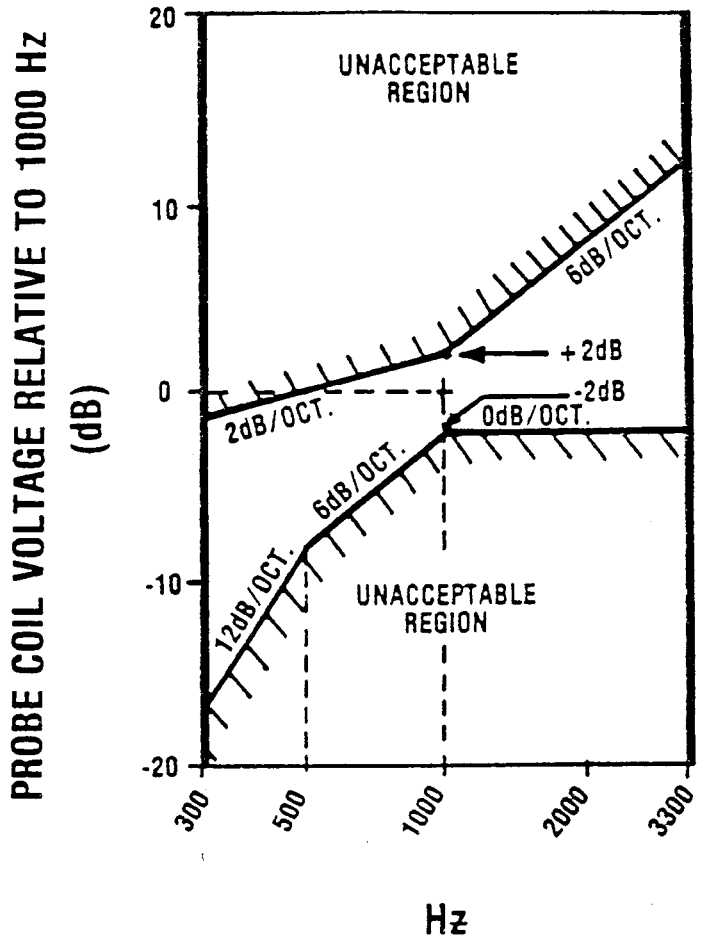

FIG 4B INDUCED VOLTAGE FREQUENCY RESPONSE
FOR RECEIVERS WITH AN AXIAL FIELD THAT EXCEEDS -22 dB

APPENDIX A—BIBLIOGRAPHY

(A1) EIA Standard RS–464, Private Branch Exchange (PBX) Switching Equipment for Voiceband Applications.

(A2) EIA Standard RS–478, Multi-Line Key Telephone Systems (KTS) for Voiceband Applications.

(A3) EIA Standard RS–470, Telephone Instruments with Loop Signaling for Voiceband Applications.

(A4) EIA Project Number PN–1361, Environmental and Safety Considerations for Voice Telephone Terminals.

(A5) Federal Communications Commission Rules and Regulations, part 68, Connection of Terminal Equipment to the Telephone Network.

(A6) IEEE Standard, Method for Measuring the Magnetic Field arould a Telephone Receiver. (to be published)

[49 FR 1363, Jan. 11, 1984, as amended at 61 FR 42187, Aug. 14, 1996]

EFFECTIVE DATE NOTE: At 61 FR 42187, Aug. 14, 1996, in § 68.316, the section heading and introductory paragraph was revised, effective Oct. 23, 1996. For the convenience of the user, the superseded text is set forth as follows:

§ 68.316 Hearing aid compatibility: technical standards.

A telephone handset is hearing aid-compatible if it complies with the following standard, published by Electronic Industries Association, copyright 1983, and reproduced by permission of Electronic Industries Association:

* * * * *

§ 68.317 Hearing aid compatibility volume control: technical standards.

(a) An analog telephone complies with the Commission's volume control requirements if the telephone is equipped with a receive volume control that provides, through the receiver in the handset or headset of the telephone, 12 dB of gain minimum and up to 18 dB of gain maximum, when measured in terms of Receive Objective Loudness Rating (ROLR), as defined in paragraph 4.1.2 of ANSI/EIA–470–A–1987 (Telephone Instruments With Loop Signaling) . The 12 dB of gain minimum must be achieved without significant clipping of the test signal. The telephone also shall comply with the upper and lower limits for ROLR given in Table 4.4 of ANSI/EIA–470–A–1987 when the receive volume control is set to its normal unamplified level.

NOTE TO PARAGRAPH (a): Paragraph 4.1.2 of ANSI/EIA–470–A–1987 identifies several characteristics related to the receive response of a telephone. It is only the normal unamplified ROLR level and the change in ROLR as a function of the volume control setting that are relevant to the specification of volume control as required by this section.

(b) The ROLR of an analog telephone shall be determined over the frequency range from 300 to 3300 HZ for short, average, and long loop conditions represented by 0, 2.7, and 4.6 km of 26 AWG nonloaded cable, respectively. The specified length of cable will be simulated by a complex impedance. (See Figure A.) The input level to the cable simulator shall be −10 dB with respect to 1 V open circuit from a 900 ohm source.

(c) A digital telephone complies with the Commission's volume control requirements if the telephone is equipped with a receive volume control that provides, through the receiver of the handset or headset of the telephone, 12 dB of gain minimum and up to 18 dB of gain maximum, when measured in terms of Receive Objective Loudness Rating (ROLR), as defined in paragraph 4.3.2 of ANSI/EIA/TIA–579–1991 (Acoustic-To-Digital and Digital-To-Acoustic Transmission Requirements for ISDN Terminals). The 12 dB of gain minimum must be achieved without significant clipping of the test signal. The telephone also shall comply with the limits on the range for ROLR given in paragraph 4.3.2.2 of ANSI/EIA/TIA–579–1991 when the receive volume control is set to its normal unamplified level.

(d) The ROLR of a digital telephone shall be determined over the frequency range from 300 to 3300 Hz using the method described in paragraph 4.3.2.1 of ANSI/EIA/TIA–579–1991. No variation in loop conditions is required for this measurement since the receive level of a digital telephone is independent of loop length.

(e) The ROLR for either an analog or digital telephone shall first be determined with the receive volume control at its normal unamplified level. The minimum volume control setting shall be used for this measurement unless the manufacturer identifies a different setting for the nominal volume level. The ROLR shall then be determined

with the receive volume control at its maximum volume setting. Since ROLR is a loudness rating value expressed in dB of loss, more positive values of ROLR represent lower receive levels. Therefore, the ROLR value determined for the maximum volume control setting should be subtracted from that determined for the nominal volume control setting to determine compliance with the gain requirement.

(f) The 18 dB of receive gain may be exceeded provided that the amplified receive capability automatically resets to nominal gain when the telephone is caused to pass through a proper on-hook transition in order to minimize the likelihood of damage to individuals with normal hearing.

(g) These incorporations by reference of paragraph 4.1.2 (including Table 4.4) of American National Standards Institute (ANSI) Standard ANSI/EIA–470–A–1987 and paragraph 4.3.2 of ANSI/EIA/TIA–579–1991 were approved by the Director of the Federal Register in accordance with 5 U.S.C. 552(a) and 1 CFR Part 51. Copies of these publications may be purchased from the American National Standards Institute (ANSI), Sales Department, 11 West 42nd Street, 13th Floor, New York, NY 10036, (212) 642–4900. Copies also may be inspected during normal business hours at the following locations: Federal Communications Commission, 2000 M Street, NW., Public Reference Room, Room 220, Washington, DC 20554; and Office of the Federal Register, 800 N. Capitol Street, NW., suite 700, Washington, DC.

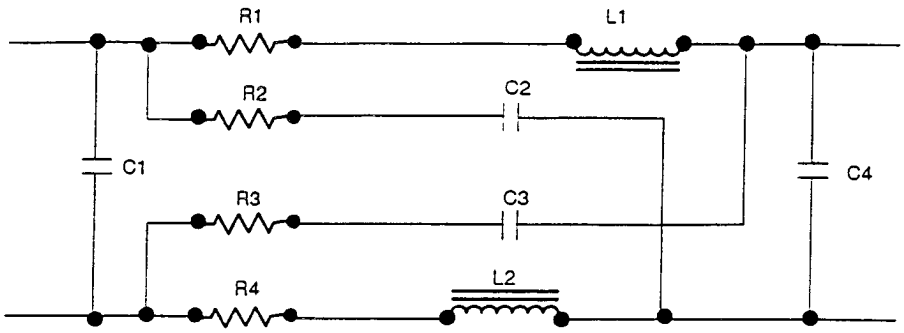

Component	0.914 km (3 kft)	1.83 km (6 kft)
R_1, R_4	124 Ω	249 Ω
R_2, R_3	174 Ω	312 Ω
C_1, C_4	0.0113 μF	0.0226 μF
C_2, C_3	0.0122 μF	0.0255 μF
L_1, L_2	0.336 mH	0.983 mH

Notes:
(1) *All values are ±1%.*
(2) 2.7 km *(9 kft) and* 4.6 km *(15 kft) can be made up of cascaded sections of the above.*

Loop Simulator for 26 AWG Cable

[61 FR 42187, Aug. 14, 1996]

EFFECTIVE DATE NOTE: At 61 FR 42187, Aug. 14, 1996, § 68.317 was added, effective Oct. 23, 1996.

§ 68.318 Additional limitations.

(a) *General.* Registered terminal equipment for connection to those services discussed below must incorporate the specified features.

(b) *Registered terminal equipment connecting to 1.544 Mbps digital service.* (1) Until December 18, 1989, terminal equipment connecting to 1.544 Mbps service shall contain circuitry that assures continuity of output signal. This equipment shall assure that either the outgoing signal meets the minimum pulse density requirement below or one of the specified keep alive signals is transmitted. Power to operate this equipment may come from the line or premises power. Line powered functioning shall be achieved as follows: A direct current connection shall be provided between the simplexes of the transmit and receive pairs. The line power to operate the equipment which assures continuity of the output signal shall be derived from the direct current connection between the simplexes of the transmit and receive pairs. For circuits placed in service prior to February 18, 1988, the telephone company will drive 60 mA through this connection from a constant current source. With 60 mA between the transmit and receive pairs, the voltage drop between the transmit and receive pairs shall

not exceed 67 volts. The minimum acceptable average pulse density is 0.125. The maximum acceptable length of a continuous sequence of ''zeros'' is 80 pulse positions. The keep alive signal inserted when the pulse density drops too low shall be one of the following:

(i) *Type 1 Keep Alive Signal.* This signal is a consecutive sequence of all ''ones''.

(ii) *Type 2 Keep Alive Signal.* This signal is a sequence of 193-bit frames consisting of a framing bit plus 192-bit sequence of consecutive ''ones''. The framing bit executes the following repetitive pattern every 12 frames:

1 0 0 0 1 1 0 1 1 1 0 0

(iii) *Type 3 Keep Alive Signal.* This signal sequence is the regenerated received signal connected to the transmit port through a loopback circuit.

(2) For circuits placed in service on or after February 18, 1988, and for all circuits as of December 18, 1989, whenever such circuits were placed in service, the telephone company is not required to provide line power to operate continuity of output functions in terminal equipment connecting to 1.544 Mbps service. As of December 18, 1989, such terminal equipment is not required to contain continuity of output capability, provided, however, that telephone companies by tariff may require that such equipment contain the continuity of output capability described in this paragraph up to December 18, 1992. Applications for registration of terminal equipment for connection to 1.544 Mbps service which does not contain continuity of output capability shall be accepted as of December 18, 1988, but eligibility for connection to 1.544 Mbps service shall be governed by this paragraph.

(c) *Registered terminal equipment connecting to the public switched network*—(1) *Limitation on automatic dialing.* Automatic dialing to a particular number must cease after 15 successive attempts. This rule does not apply to manually activated dialers which dial a number just once following each activation.

(2) *Line seizure by automatic telephone dialing systems.* Automatic telephone dialing systems which deliver a recorded message to the called party must release the called party's telephone line within 5 seconds of the time notification is transmitted to the system that the called party has hung up, to allow the called party's line to be used to make or receive other calls.

(3) *Telephone facsimile machines; identification of the sender of the message.* It shall be unlawful for any person within the United States to use a computer or other electronic device to send any message via a telephone facsimile unless such message clearly contains, in a margin at the top or bottom of each transmitted page or on the first page of the transmission, the date and time it is sent and an identification of the business, other entity, or individual sending the message and the telephone number of the sending machine or of such business, other entity, or individual. The telephone number provided may not be a 900 number or any other number for which charges exceed local or long distance transmission charges. Telephone facsimile machines manufactured on and after December 20, 1992, must clearly mark such identifying information on each transmitted message. Facsimile modem boards manufactured on and after December 13, 1995, must comply with the requirements of this section.

(d) *Requirement that registered equipment allow access to common carriers.* Any equipment or software manufactured or imported on or after April 17, 1992, and installed by any aggregator shall be technologically capable of providing consumers with access to interstate providers of operator services through the use of equal access codes. The terms used in this paragraph shall have the meanings defined in §64.708 of this chapter (47 CFR 64.708).

[49 FR 48726, Dec. 14, 1984, as amended at 51 FR 951, Jan. 9, 1986; 52 FR 43077, Nov. 9, 1987; 52 FR 49413, Dec. 31, 1987; 53 FR 1103, Jan. 15, 1988; 56 FR 18524, Apr. 23, 1991; 56 FR 56166, Nov. 1, 1991; 57 FR 48336, Oct. 23, 1992; 60 FR 42069, Aug. 15, 1995]

Subpart E—Complaint Procedures

§68.400 Content.

A complaint shall be in writing and shall contain:

(a) The name and address of the complainant,

(b) The name (and address, if known) of the defendant against whom the complaint is made,

(c) A complete statement of the facts, including supporting data, where available, showing that such defendant did or omitted to do anything in contravention of part 68 of the Commission's Rules, and

(d) The relief sought.

§ 68.402 Amended complaints.

An amended complaint setting forth transactions, occurrences or events which have happened since the filing of the original complaint and which relate to the original cause of action may be filed with the Commission.

§ 68.404 Number of copies.

An original and two copies of all complaints and amended complaints shall be filed. An original and one copy of all other pleadings shall be filed.

§ 68.406 Service.

(a) The Commission will serve a copy of any complaint or amended complaint filed with it, together with a notice of the filing of the complaint. Such notice shall call upon the defendant to satisfy or answer the complaint in writing within the time specified in said notice of complaint.

(b) All subsequent pleadings and briefs shall be served by the filing party on all other parties to the proceeding in accordance with the requirements of §1.47. Proof of such service shall also be made in accordance with the requirements of said section.

§ 68.408 Answers to complaints and amended complaints.

Any party upon whom a copy of a complaint or amended complaint is served under this subpart shall serve an answer within the time specified by the Commission in its notice of complaint. The answer shall advise the parties and the Commission fully and completely of the nature of the defense, and shall respond specifically to all material allegations of the complaint. In cases involving allegations of harm, the answer shall indicate what action has been taken or is proposed to be taken to stop the occurrence of such harm, both in terms of future production and with reference to articles in the possession of distributors, sellers, and users. Collateral or immaterial issues shall be avoided in answers and every effort should be made to narrow the issues. Matters alleged as affirmative defenses shall be separately stated and numbered. Any defendant failing to file and serve an answer within the time and in the manner prescribed may be deemed in default.

§ 68.410 Replies to answers or amended answers.

Within 10 days after service of an answer or an amended answer, a complainant may serve a reply which shall be responsive to matters contained in such answer or amended answer and shall not contain new matters. Failure to reply will not be deemed an admission of any allegation contained in such answer or amended answer.

§ 68.412 Defective pleadings.

Any pleading filed in a complaint proceeding not in substantial conformity with the requirements of the applicable rules in this part may be dismissed.

§ 68.414 Hearing aid-compatibility: enforcement.

Enforcement of §§68.4 and 68.112 is hereby delegated to those states which adopt those sections and provide for their enforcement. The procedures followed by a state to enforce those sections shall provide a 30-day period after a complaint is filed, during which time state personnel shall attempt to resolve a dispute on an informal basis. If a state has not adopted or incorporated §§68.4 and 68.112, or failed to act within 6 months from the filing of a complaint with the state public utility commission, the Commission will accept such compliants. A written notification to the complainant that the state believes action is unwarranted is not a failure to act.

[49 FR 1368, Jan. 11, 1984]

Subpart F—Connectors

SOURCE: 41 FR 28699, July 12, 1976, unless otherwise noted.

§68.500 Specifications.

General. The US customary units are shown in parentheses throughout this subpart F. US customary units were the original dimensional units used in designing the plugs and jacks shown in the following pages. The dimensions shown without parenthesis are in SI units. The SI dimensional units are derived from the US customary units by multiplying ''inches'' by ''25.4'' to derive the exact conversion in millimeters with no rounding-off of the resulting decimal value. The number of decimal places to which the conversion is taken by adding a particular number of zeroes to the right end of the resulting SI value, where required, is governed by the concept that when the calculated SI dimensional unit is divided by ''25.4,'' the resulting ''inches'' calculation will be exactly that shown in the parenthesis (the original design dimension). The conversion to SI force units, newtons, is rounded off to a number of decimal places that will result in the calculated SI force value being within less than one percent of the original US customary force unit value located adjacent in parenthesis (the original design value). The rationale for this is that this will bring the force conversions to within the degree of accuracy of the force-measuring device and avoid the carrying of an unrealistic number of decimal places which would otherwise result from an exact conversion. The plugs and jacks described in this section represent the standard connections to be used for connections to the telephone network. The plug and jack designs shown are representative of generic types, and should not be interpreted as the only designs that may be used. Design innovation and improvement is expected; but for interchangeability to be maintained, alternative designs (the ''or equivalent'' permitted in §68.104) must be compatible with the plugs and jacks shown. The interface dimensions between mating plugs and jacks must be maintained. Hardware used to mount, protect, and enclose standard jacks is not described. The only requirement on connecting blocks, housings, dust covers, outdoor boxes, and the like that contain standard network jacks is that they accept standard plugs with cordage. For special purpose applications, plugs may be made longer than shown or adapted for direct use on equipment or apparatus without cordage. The sliding modular plug used on the back of many modular wall telephone sets is an example of such a special purpose application. It is the responsibility of the designers and manufacturers of communication equipment who use such plugs to assure that they are compatible with the hardware used to mount standard jacks with which they plan to interface.

(a) *Minature 6-position plug:*

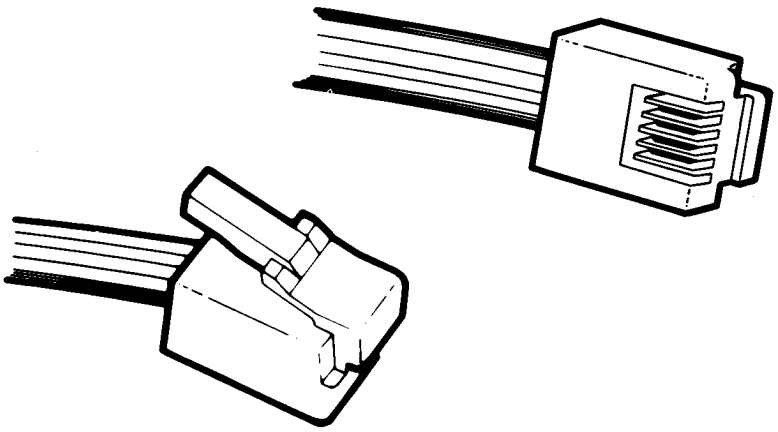

(Note: This plug is depicted equipped with 4 contacts; it may be fabricated with its full 6 contact capability.)

Figure 68.500(a)(1)(i)–View

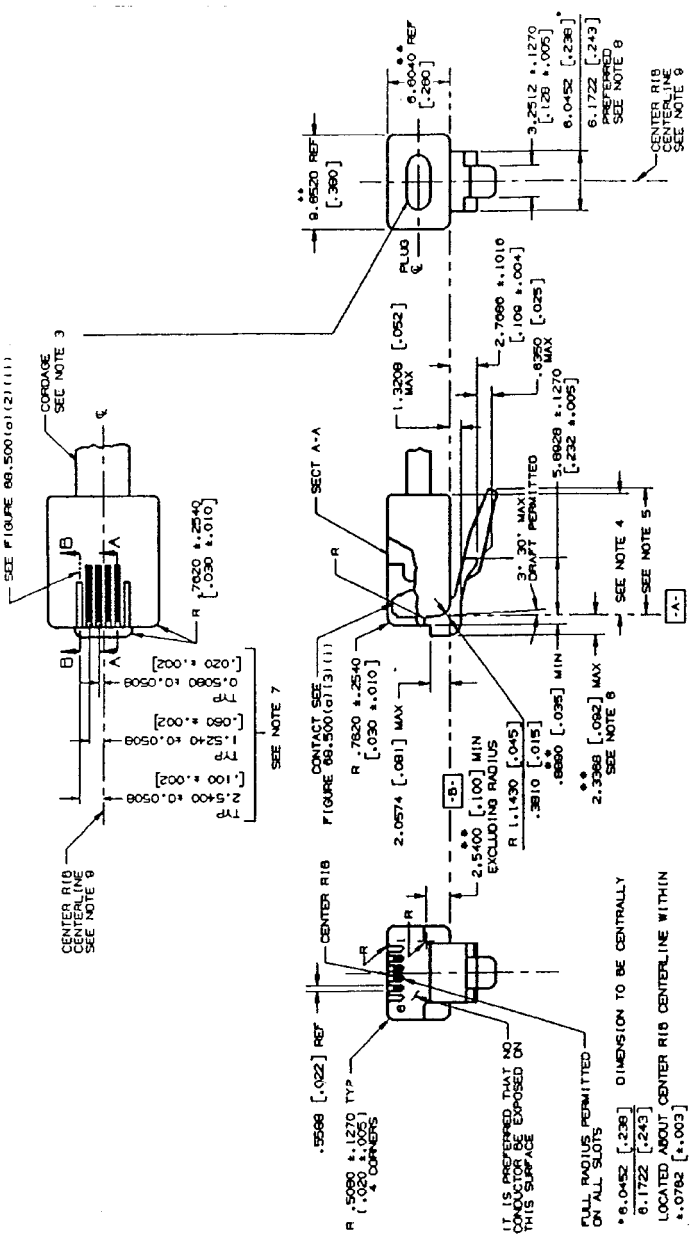

FIGURE 68.500(a)(2)(i)(i) - 6 POSITION PLUG MECHANICAL SPECIFICATION

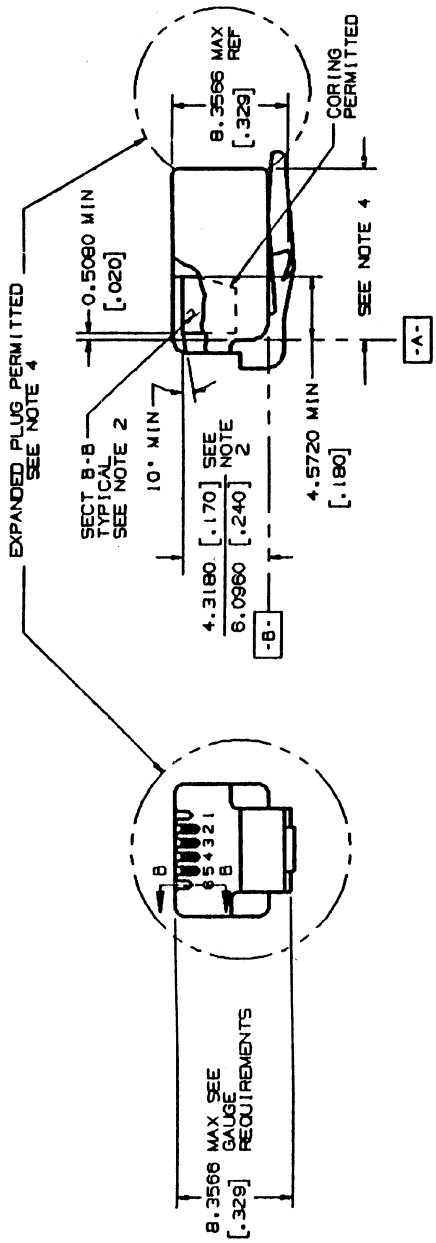

NOTE: ALL NOTES FOLLOW THIS FIGURE.

FIGURE 68.500(a)(2)(ii) - 6 POSITION PLUG
MECHANICAL SPECIFICATION (CONTINUED)

NOTES: (Notes apply to Figures 68.500(a)(2)(i) and 68.500(a)(2)(ii))

1. All plugs must be capable of meeting the requirements of the plugs go and no-go gauges.
2. Section BB applies to any jack contact receiving slot which does not contain a plug contact.
3. The preferred major cordage cross section is 2.5400 mm (.100 inch) max. thick by 5.0800 mm (.200 inch) max. wide, with rounded corners. It should exit the plug on the plug centerline. Other cordage configurations are permitted but may inhibit the special features of some network jack enclosures.
4. The standard plug length is 11.6840 mm (.460 inch) max. Plugs may be made longer than standard or adapted for direct use on special cords, adapters with out cordage, and on apparatus or equipment subject to the limitations described in the Section 68.500 introductory paragraphs. Plugs longer than standard may inhibit the special features of some network jack enclosures.
5. A 12.0396 mm (.474 inch) minimum tab length is required. It is preferred that a maximum tab length be no longer than 13.2080 mm (.520 inch). Longer tabs may be used with the same limitations as described in Note 4.
6. To obtain maximum plug guidance when 6-position plugs are inserted in 8-position jacks, it is desirable to extend the front plug nose to the 2.3368 mm (.092 inch) maximum.
7. These dimensions apply to the location of jack contact receiving slots. It is desirable that plug contacts be centered axially in these slots, but centering is not required.
8. The 6.0452/6.1722 mm (.238/.243 inch) dimension is preferred to obtain maximum plug guidance in jacks with more than 6 conductors. A tolerance range of 5.9182/6.1722 mm (.233/.243 inch) is permitted, but may create targeting problems in 8-position jacks.
9. The center rib centerline shall be coincident with the plug width 9.6520 mm (.380 inch) ref. centerline within +/− .0762mm (+/− .003 inch).

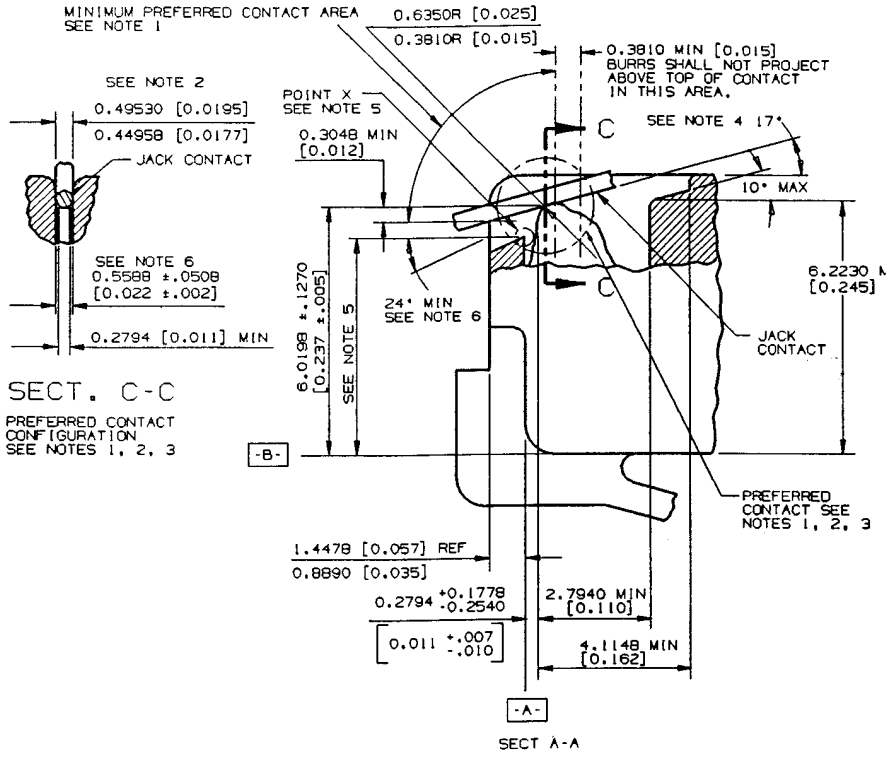

NOTE: ALL NOTES FOLLOW THIS FIGURE.

NOTE: THE 8 POSITION PLUG/JACK CONTACT SPECIFICATION IS IDENTICAL.

FIGURE 68.500(a)(3)(i)- 6 POSITION PLUG
PLUG /JACK CONTACT SPECIFICATION

NOTES: (Notes apply to Figure 68.500(a)(3)(i))

1. The plug/jack contact interface should be hard gold to hard gold and should have a minimum gold thickness of .0012700 mm (0.000050 inch) on each side of the interface. The minimum contact force should be .98 N (100 grams). Any non-gold contact material must be compatible with gold and provide equivalent contact performance. A smooth, burr-free surface is required at the interface in the area shown.
2. The jack contact design is based upon .4572 mm (.018 inch) spring temper phosphor bronze round wire in the modular plug blade and jack contact interface. Other contact configurations that provide contact performance equal to or better than the preferred configurations and do not cause damage to the plug or jack are permitted. The preferred jack contact width is .44958/.49530 mm (.0177/.0195 inches). Deviations from the preferred jack contact width are permitted for round contacts as well as noncircular cross sectional shapes but they must be compatible with existing plug configurations. The requirements of Note 1 apply to all possible contact areas.
3. The configuration of the plug contact and the front plastic of the plug should prevent jack contacts from being damaged during plug insertion into jacks.
4. This is the suggested nominal contact angle between plugs and jacks with the plug latched into the jack. If this angle becomes greater than 24 degrees loss of electrical contact may occur between the plug and jack. If the nominal contact angle becomes less than 13 degrees, interference between jack contacts and the internal plastic in the plug may occur.
5. To avoid loss of electrical contact, the preferred dimension from datum B to the highest point ''X'' should be 5.0800 mm (.200 inch) max. A dimension greater than 5.3594 mm (.211 inch) may result in loss of electrical contact between plugs and jacks. The 5.3594 mm (.211 inch) max. shall be considered an absolute maximum.
6. The 24 degree min. angle applies only to plugs with front plastic walls higher than 4.8260 mm (.190 inches).

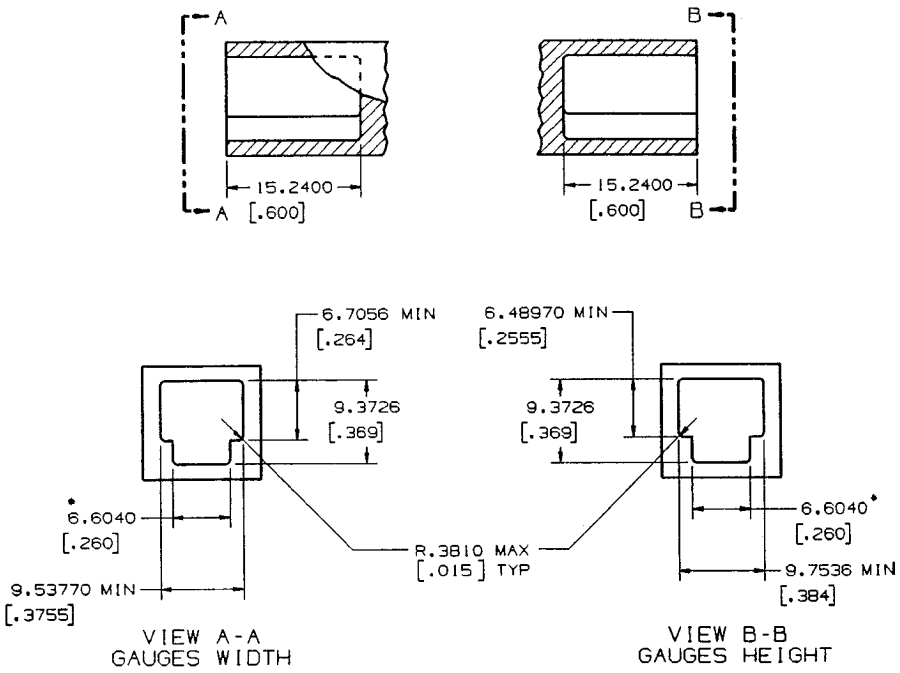

NO-GO GAUGE

NOTES:

1. THE PLUG SHALL NOT BE CAPABLE OF ENTERING THE GAUGE MORE THAN 1.7780mm [.070] BEYOND DATUM-A- (SEE FIGURE 68.500(a)(2)(i)) WITH 8.90 newtons[2.0 POUNDS] INSERTION FORCE.

2. NON-TOLERANCED DIMENSIONS GIVEN TO FOUR PLACES SHALL BE WITHIN ±0.0508mm [.002].

3. *6.6040mm [.260] DIMENSION TO BE CENTRALLY LOCATED WITH RESPECT TO 9.7536mm [.384] MINIMUM AND 9.53770mm [.3755] MINIMUM WITHIN ±0.0508mm [.002] .

FIGURE 68.500(a)(4)(i)- 6 POSITION PLUG
MINIMUM PLUG SIZE

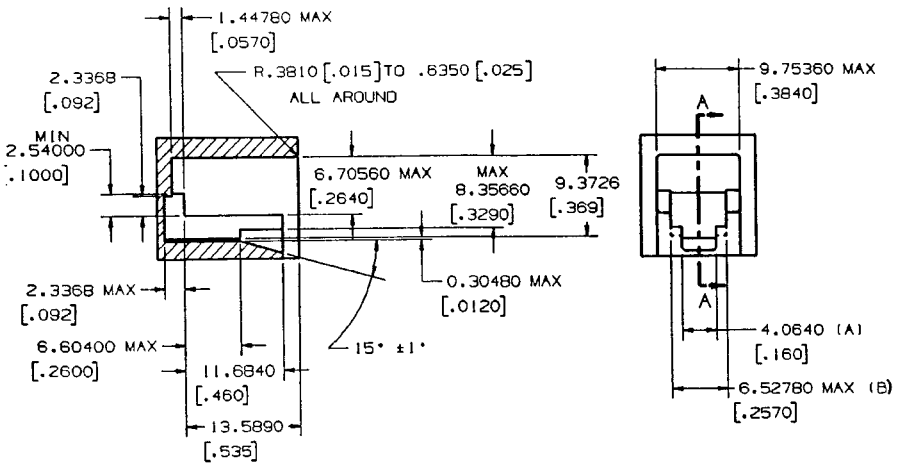

SECT. A-A

GO GAUGE

NOTES

1. THE PLUG SHALL BE CAPABLE OF INSERTION AND LATCHING INTO THE GUAGE WITH 22.24 newtons [5 POUNDS] OR LESS INSERTIONS FORCE. PLUG LATCHING BAR SHALL BE DEPRESSED SO AS NOT TO INTERFERE WITH THE PLUG ENTRY. AFTER INSERTION AND LATCHING, PLUG SHALL BE CAPABLE OF REMOVAL, WITH THE LATCH DEPRESSED, WITH A REMOVAL FORCE OF 44.48 newtons [10 POUNDS] OR LESS APPLIED AT AN ADVANTAGEOUS ANGLE.
2. DIMENSIONS GIVEN TO FOUR DECIMAL PLACES SHALL BE WITHIN ±.0508mm [±.002].
3. DIMENSIONS (A) AND (B) TO BE CENTRALLY LOCATED WITH RESPECT TO 9.75360mm [.3840] MAX. JACK OPENING WIDTH WITHIN ±0.0254mm [.001].
4. DO NOT SCALE DRAWINGS FOR EXTERNAL CONFIGURATION.

FIGURE 68.500(a)(5)(i)- 6 POSITION PLUG
MAXIMUM PLUG SIZE

(b) *Miniature 6-position jack:*

(1) [Reserved]

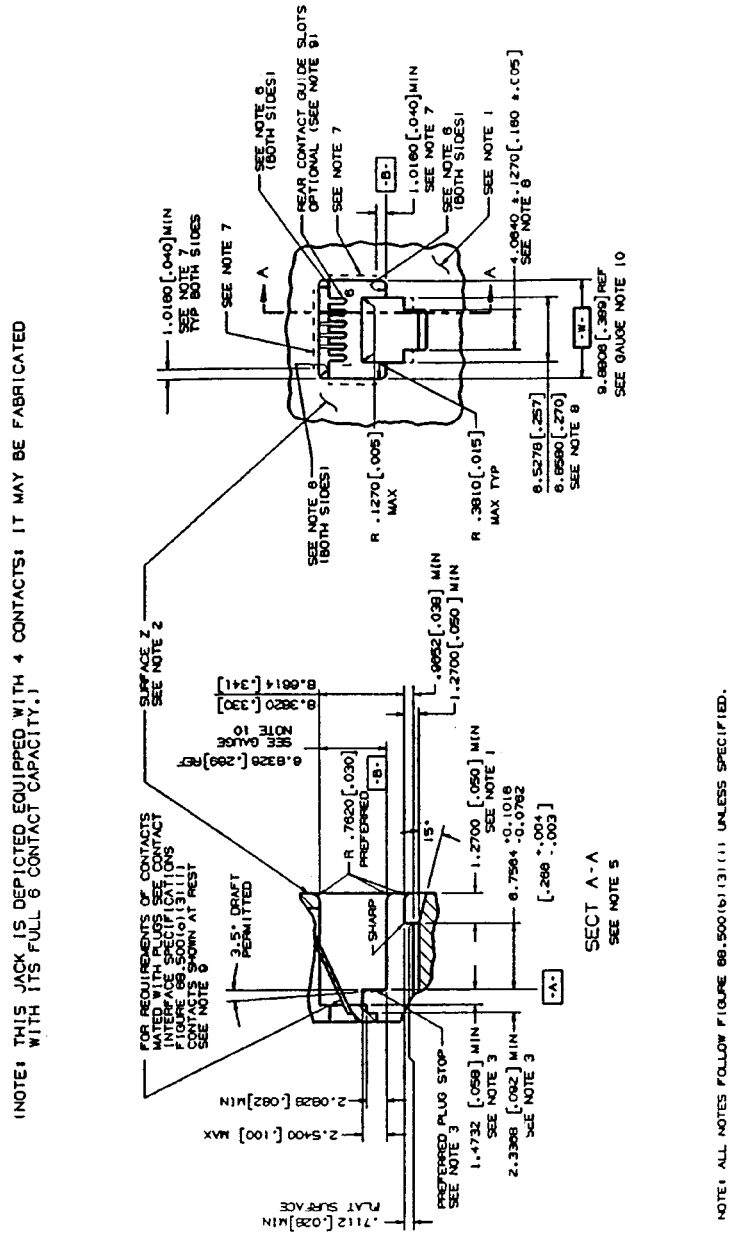

FIGURE 68.500(b)(2)(ii)- 6 POSITION JACK MECHANICAL SPECIFICATION

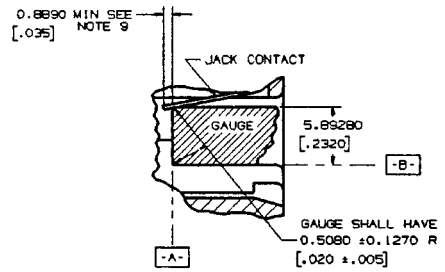

SEC A-A

(SHOWN WITHOUT REAR CONTACT GUIDES)

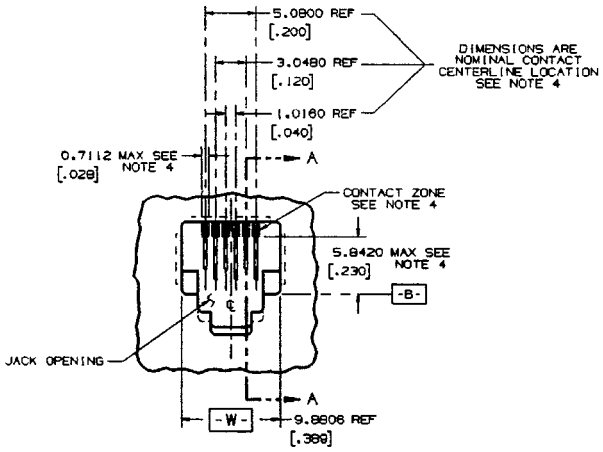

VIEW OF CONTACT ZONE

(SHOWN WITHOUT REAR CONTACT GUIDES)

NOTE: ALL NOTES FOLLOW THIS FIGURE.

FIGURE 68.500(b)(3)(i)- 6 POSITION JACK
MECHANICAL SPECIFICATIONS (CONTINUED)

NOTES: (Notes apply to Figures 68.500(b)(2)(i) and 68.500(b)(3)(i).)

1. Front surface projections beyond the 1.2700 mm (.050 inch) min. shall be configured so as not to prevent finger access to the plug release catch (Reference Figure 68.500(a)(2)(i), 6-Position Plug, Mechanical Specifications). A catch length greater than 1.2700 mm (.050 inch) is beneficial in providing greater breakout strength.
2. Surface Z need not be planar or coincident with the surface under the plug release catch. Surface Z projections must not prevent insertion, latching, and unlatching of the standard 6-position plug described in § 68.500(a).
3. The preferred plug stop surface is indicated. If some other internal feature is used as a plug stop, it must be located so that the axial movement of a latched plug is no greater than 1.1430 mm (0.045 inch).
4. To prevent mistargeting between the plug and jack contacts, the jack contacts should be completely contained in their individual contact zones, .7112 mm (.028 inch) max. wide, where they extend into the jack openings. There is no location requirement for jack contacts below these zones 5.8420 mm (.230 inch) max., but adequate contact separation must be maintained to prevent electrical breakdown. These shaded contact zones should be centrally located, (included all locating tolerances), about the jack opening width 9.8806 mm (.389 inch) Ref, (Datum -W-). Contacts located outside of these zones may result in mistargeting between the jack and plug contacts.
5. All inside and outside corners in the plug cavity to be .3810 mm (.015 inch) radius max. unless specified.
6. These surfaces shall have 0°15′ maximum draft.
7. Relief inside the dotted areas on 3 sides of the jack opening is permitted. The 6.8326 mm (.269 inch) Ref and 9.8806 mm (.389 inch) Ref Gauge Requirements must be maintained in each corner, (ref. 1.0160 mm (0.040 inch) min), to assure proper plug/jack interface guidance. A .8128 mm ±.1270 mm (.032 inch ±.005 inch) relief on the top side, (opposite plug catch), is required on jacks in connecting blocks which mount and connect portable wall telephones so as to assure interface with the special purpose sliding modular plug used on many wall telephone sets.
8. 4.0640 mm (.160 inch) and 6.5278/6.8580 mm (.257/.270 inch) dimensions to be centrally located to jack opening width -W- within ±.1778 mm (0.007 inch).
9. Minimum acceptable jack contact length. When contact guide slots are used, the contacts must always be contained inside the guide slots and the contacts must move freely in the slots so as not to restrain plug insertion or damage jack contacts.
10. Gauge Requirements:

GO: The jack shall be capable of accepting a 9.7536 x 6.7056 mm (0.3840 x 0.2640 inch) gauge and the gauge shall be capable of being removed with a maximum force of 8.9 newtons (2 pounds).

NO GO: The jack shall not accept either a 10.00760 x 6.45160 mm (0.3940 x 0.254 inch) horizontal width of opening gauge or a 6.95960 x 9.5504 mm (.2740 x .376 inch) vertical height of opening gauge. However, if either gauge is accepted the force necessary to remove the gauge shall be minimum .83 newtons (3.0 ounces).

Removal forces do not include forces contributed by contact springs nor shall external forces be applied to the jack that will affect these removal forces.

Gauges shall have a .7620 mm (.030 inch) radius on the nose and a .3810 mm (0.015 inch) radius on all edges with clearance provided for contacts.

(c) *Miniature 8-position plug, unkeyed:*

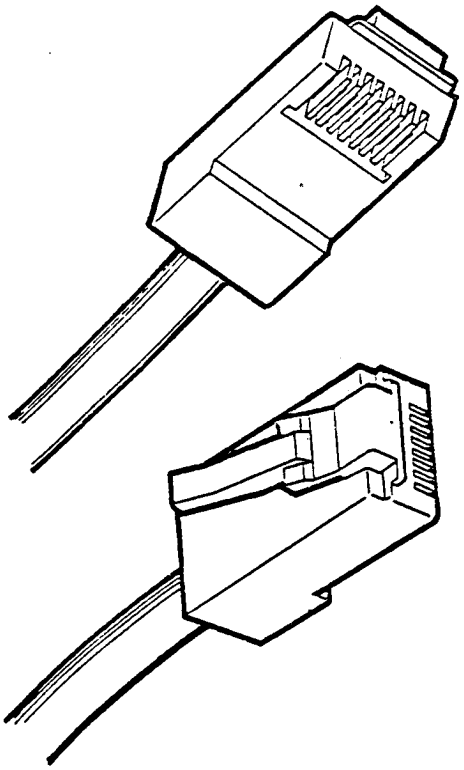

Figure 68.500(c)(1)(i) – View

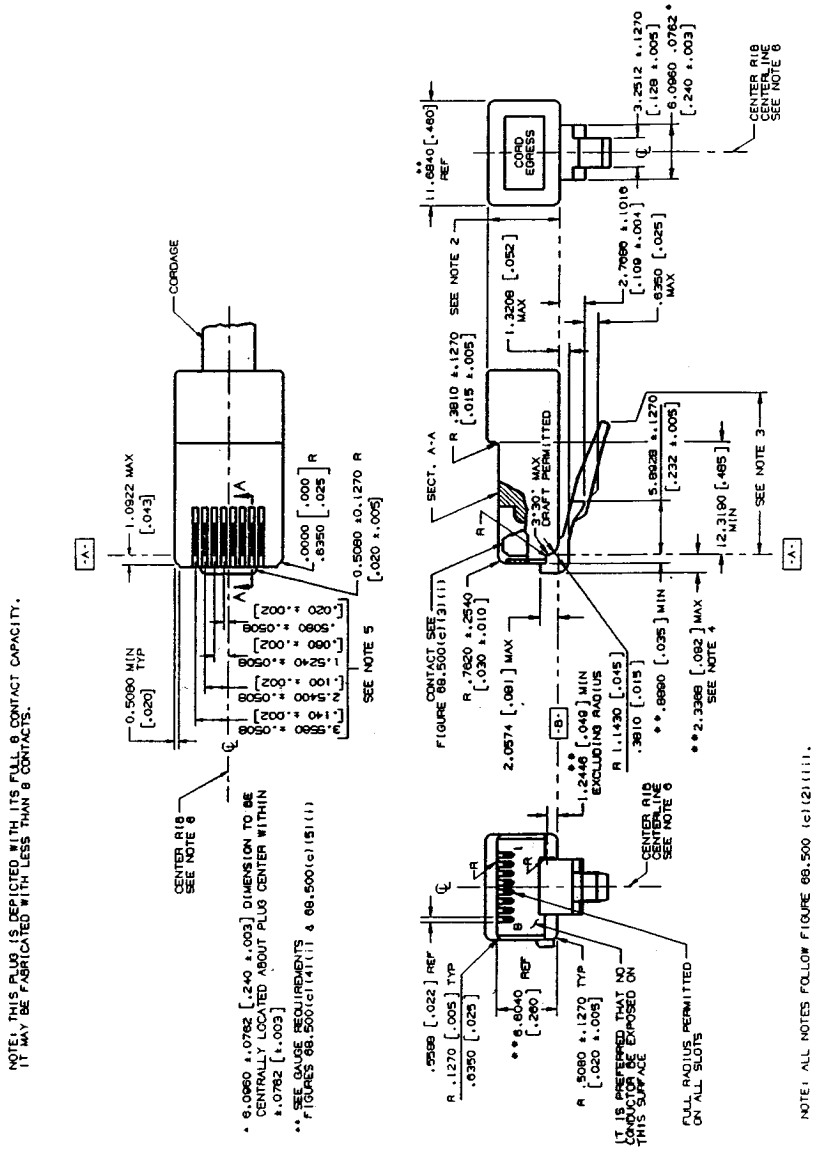

FIGURE 68.500(c)(2)(i) - 8 POSITION UNKEYED PLUG, MECHANICAL SPECIFICATION

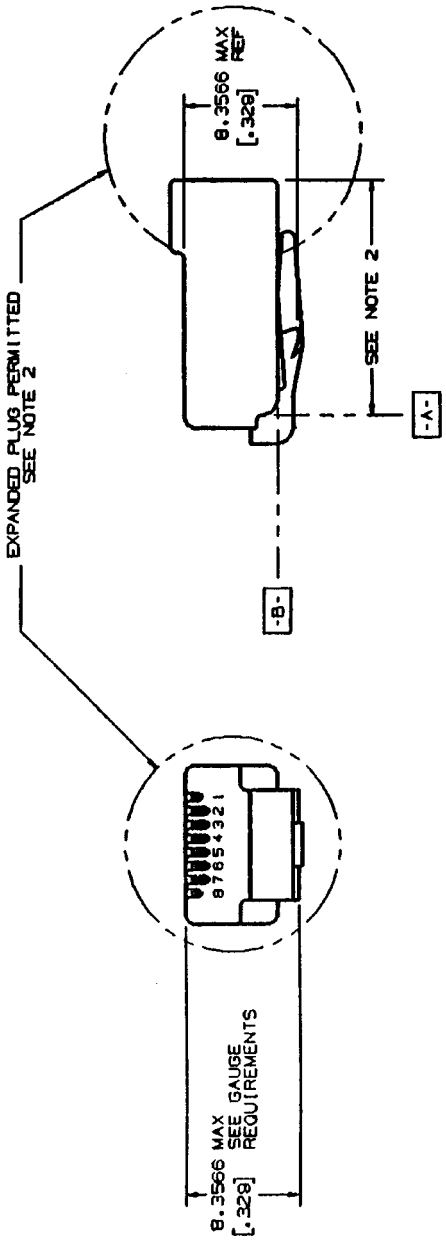

NOTE: ALL NOTES FOLLOW THIS FIGURE.

FIGURE 68.500(c)(2)(ii) - 8 POSITION UNKEYED
PLUG, MECHANICAL SPECIFICATION (CONTINUED)

NOTES: (Notes apply to Figures 68.500(c)(2)(i) and 68.500(c)(2)(ii))

1. All plugs must be capable of meeting the requirements of the plug go and no-go gauges.
2. The standard plug height in the area shown is 8.0010 mm (.315 inch) maximum. The standard plug length is 23.1140 mm (.910 inch) maximum. Plugs may be made longer than standard or adapted for direct use on special cords, adapters without cordage, apparatus or equipment subject to the limitations described in the introductory paragraphs of 68.500. Plugs longer and/or higher than standard may inhibit the special features of some network jack enclosures.
3. A 14.6050 mm (.575 inch) minimum tab length is required. It is preferred that a maximum tab length be no longer than 15.8750 mm (.625 inch). Longer tabs may be used with the same limitations described in Note 2.
4. To obtain maximum plug guidance in jacks, it is desirable to extend the front plug nose to the 2.3368 mm (.092 inch) maximum.
5. These dimensions apply to the location of jack contact receiving slots. It is desirable that plug contacts be centered axially in these slots, but centering is not required.
6. The center rib centerline shall be coincident with the plug width 11.6840 mm ref. (.460 inch ref.) centerline within ±.0762 mm (.003 inch).

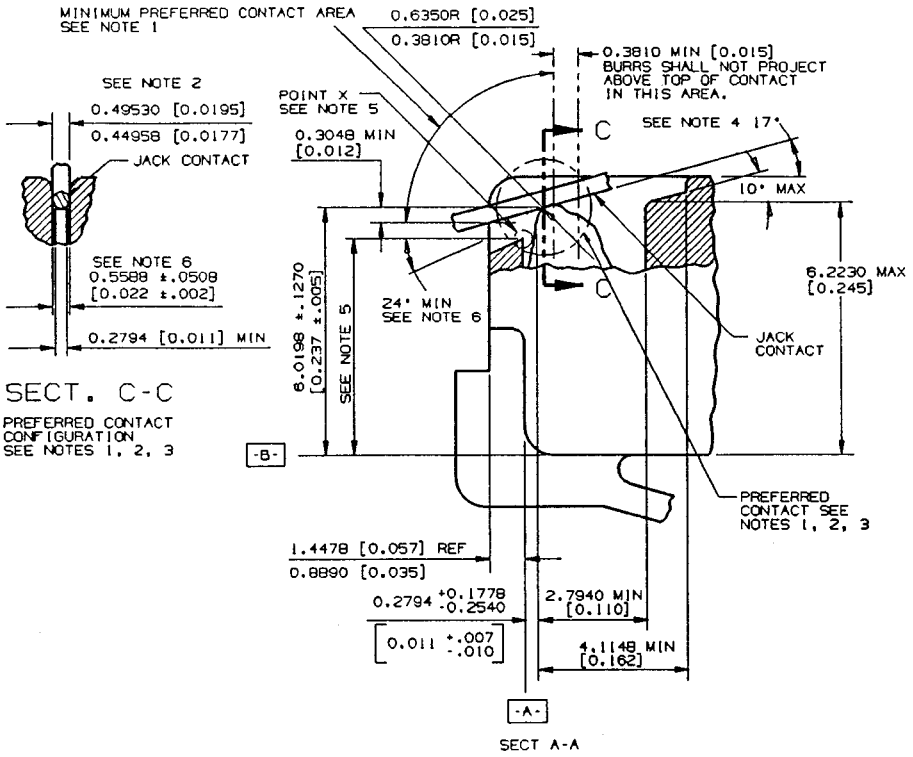

NOTE: ALL NOTES FOLLOW THIS FIGURE.

NOTE: THE 6 POSITION PLUG/JACK CONTACT SPECIFICATION IS IDENTICAL.

FIGURE 68.500(c)(3)(i)- 8 POSITION UNKEYED PLUG
PLUG /JACK CONTACT SPECIFICATION

NOTES: (Notes apply to Figure 68.500(c)(3)(i))

1. The plug/jack contact interface should be hard gold to hard gold and should have a minimum gold thickness of .0012700 mm (.000050 inch) on each side of the interface. The minimum contact force should be .98 N (100 grams). Any non-gold contact material must be compatible with gold and provide equivalent contact performance. A smooth, burr-free surface is required at the interface in the area shown.
2. The jack contact design is based upon .4572 mm (.018 inch) spring temper phosphor bronze round wire in the modular plug blade and jack contact interface. Other contact configurations that provide contact performance equal to or better than the preferred configurations and do not cause damage to the plug or jack are permitted. The preferred jack contact width is .44958/.49530 mm (.0177/.0195 inches). Deviations from the preferred jack contact width are permitted for round contacts as well as noncircular cross sectional shapes but they must be compatible with existing plug configurations. The requirements of Note 1 apply to all possible contract areas.
3. The configuration of the plug contact and the front plastic of the plug should prevent jack contacts from being damaged during plug insertion into jacks.
4. This is the suggested nominal contact angle between plugs and jacks with the plug latched into the jack. If this angle becomes greater than 24 degrees loss of electrical contact may occur between the plug and jack. If the nominal contact angle becomes less than 13 degrees, interference between jack contacts and the internal plastic in the plug may occur.
5. To avoid loss of electrical contact, the preferred dimension from datum B to the highest point ''X'' should be 5.0800 mm (.200 inch) max. A dimension greater than 5.3594 mm (.211 inch) may result in loss of electrical contact between plugs and jacks. The 5.3594 mm (.211 inch) max. shall be considered an absolute maximum.
6. The 24 degree min. angle applies only to plugs with front plastic walls higher than 4.8260 mm (.190 inches).

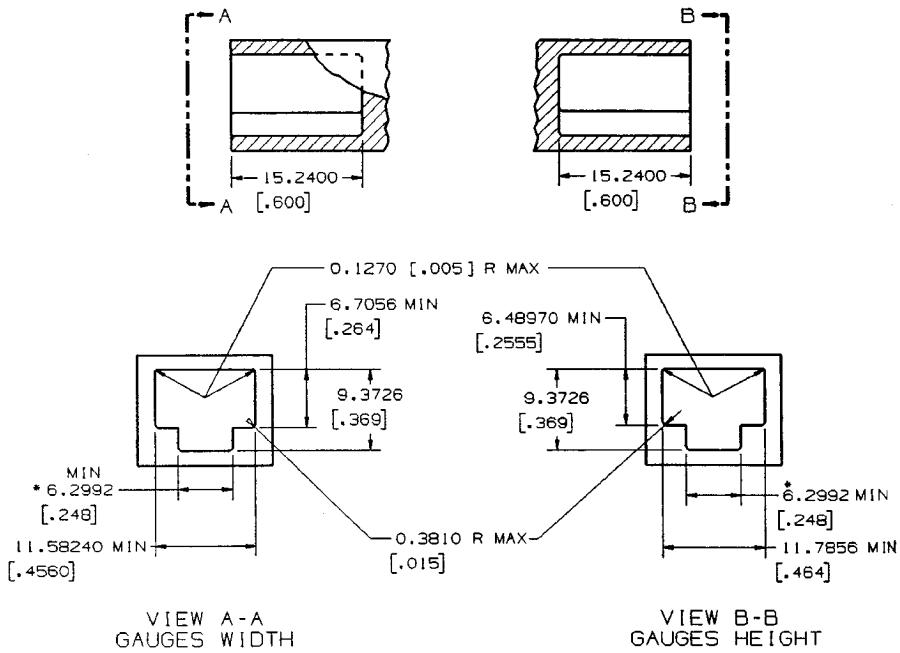

NO-GO GAUGE

NOTES:

1. THE PLUG SHALL NOT BE CAPABLE OF ENTERING THE GAUGE MORE THAN 1.7780mm [.070] BEYOND DATUM-A-(SEE FIGURE 68.500(c)(2)(i)) WITH 8.90 neuton [2.0 POUNDS] INSERTION FORCE.

2. NON-TOLERANCED DIMENSIONS GIVEN TO FOUR PLACES SHALL BE WITHIN ±0.0508mm [.002].

3. * 6.2992mm [.248] DIMENSION TO BE CENTRALLY LOCATED WITH RESPECT TO 11.7856mm [.464] MINIMUM AND 11.58240mm [.4560] MIMIMUM WITHIN ±0.0508mm [.002].

FIGURE 68.500(c)(4)(i)-8 POSITION UNKEYED PLUG, MINIMUM PLUG SIZE

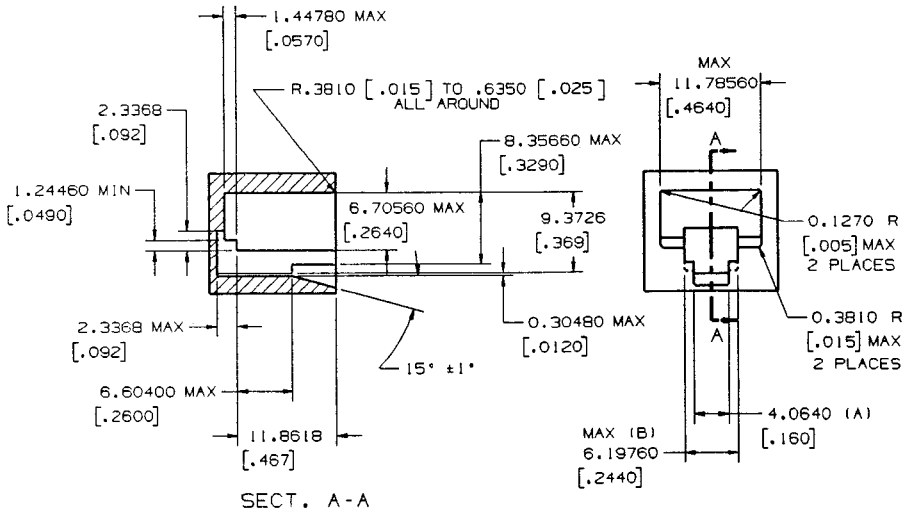

GO GAUGE

NOTES:

1. THE PLUG SHALL BE CAPABLE OF INSERTION AND LATCHING INTO THE GAUGE WITH 22.24 newtons [5 POUNDS] OR OR LESS INSERTION FORCE. PLUG LATCHING BAR SHALL BE DEPRESSED SO AS NOT TO INTERFERE WITH THE PLUG ENTRY. AFTER INSERTION AND LATCHING, PLUG SHALL BE CAPABLE OF REMOVAL, WITH THE LATCH DEPRESSED, WITH REMOVAL FORCE OF 44.48 newtons [10 POUNDS] OR LESS APPLIED AT AN ADVANTAGEOUS ANGLE.

2. DIMENSIONS GIVEN TO FOUR DECIMAL PLACES SHALL BE WITHIN ±.0508mm [.002].

3. DIMENSIONS (A) AND (B) TO BE CENTRALLY LOCATED WITH RESPECT TO 11.78560mm [.4640] MAX. JACK OPENING WIDTH WITHIN ±0.0254mm [.001].

4. DO NOT SCALE DRAWINGS FOR EXTERNAL CONFIGURATION.

FIGURE 68.500(c)(5)(i)-8 POSITION UNKEYED PLUG, MAXIMUM PLUG SIZE

(d) *Miniature 8-position series jack:*

APPENDIX A-17

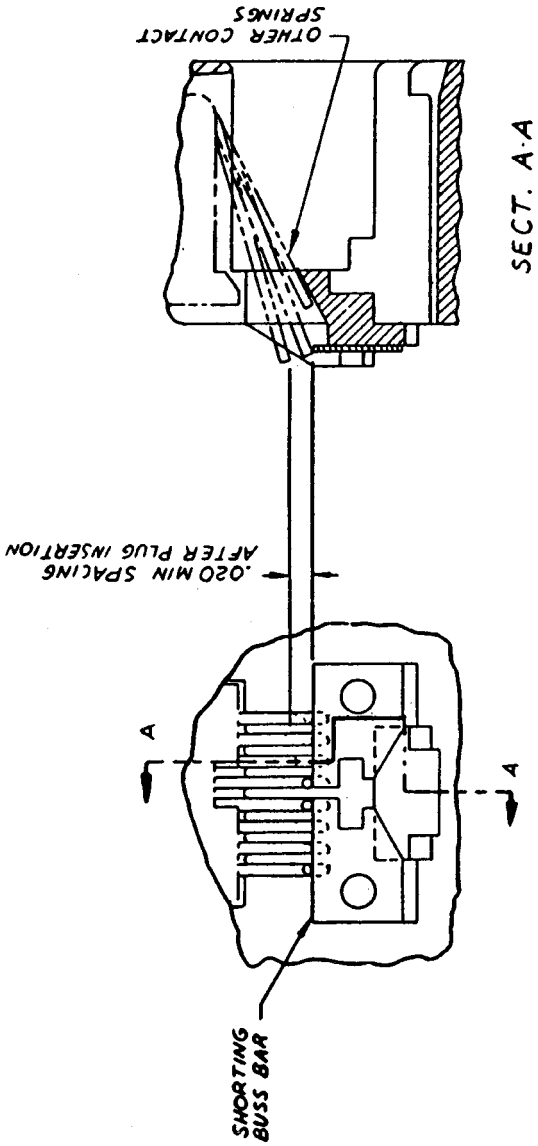

Figure 68.500(d)(3)--8 Position Series Jack, Contact Specification

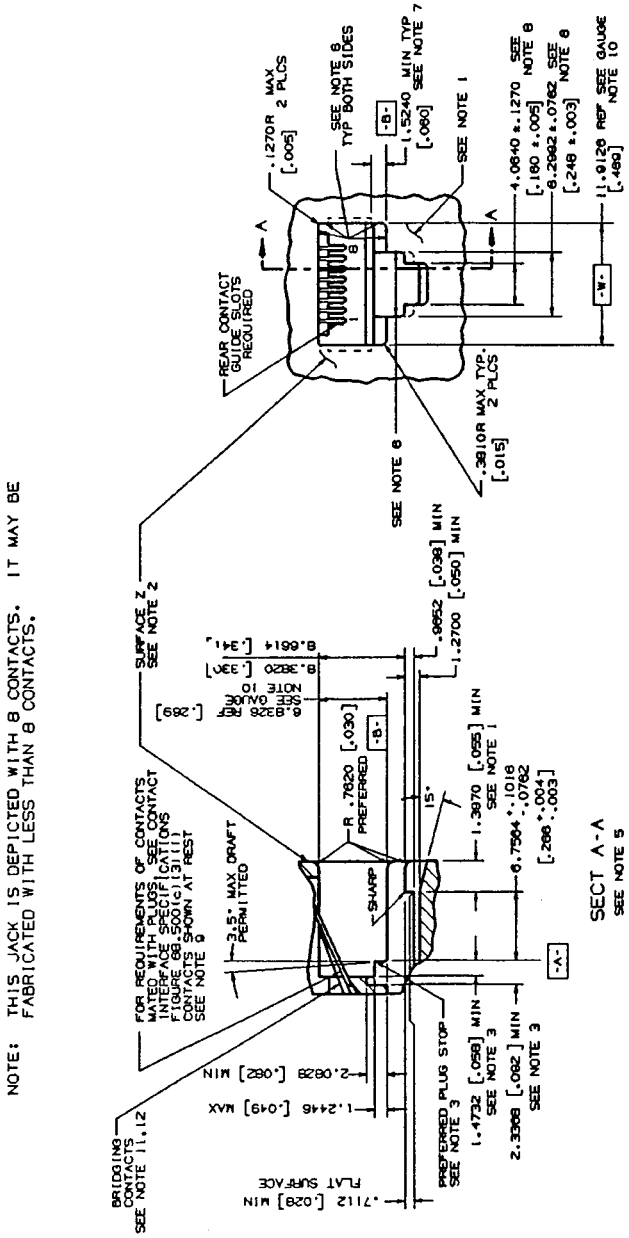

FIGURE 68.500(d)(2)(i)-8 POSITION SERIES JACK, MECHANICAL SPECIFICATION

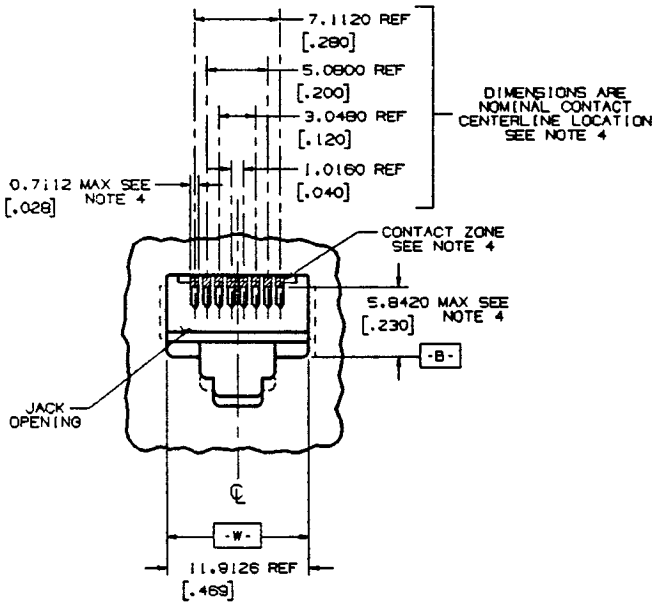

VIEW OF CONTACT ZONE

NOTE: ALL NOTES FOLLOW THIS FIGURE.

FIGURE 68.500(d)(3)(i)-8 POSITION SERIES JACK, MECHANICAL SPECIFICATION (CONTINUED)

NOTES: (Notes apply to Figures 68.500(d)(2)(i) and 68.500(d)(3)(i))

1. Front surface projections beyond the 1.3970 mm (.055 inch) minimum shall be configured so as not to prevent finger access to the plug release catch (Reference Figure 68.500(a)(2)(i) and Figure 68.500(c)(2)(i) 6 and 8-Position Plug, Mechanical Specifications). A catch length greater than 1.3970 mm (.055 inch) is beneficial in providing for greater breakout strength and improved guidance when interfacing with a 6-position plug.
2. Surface Z need not be planar or coincident with the surface under the plug release catch. Surface Z projections must not prevent insertion, latching, and unlatching of the standard 8-position plug on Figure 68.500(c)(2)(i).
3. The preferred plug stop surface is indicated. If some other internal feature is used as a plug stop, it must be located so that the axial movement of a latched plug is no greater than 1.1430 mm (.045 inch).
4. To prevent mistargeting between the plug and jack contacts, the jack contacts should be completely contained in their individual contact zones, (.7112 mm (.028 inch) max. wide), where they extend into the jack openings. There is no location requirement for jack contacts below these zones (5.8420 mm (.230 inch) max.), but adequate contact separation must be maintained to prevent electrical breakdown. These shaded contact zones should be centrally located, (include all locating tolerances), about the jack opening width 11.9126 mm (.469 inch) Ref, (Datum -W-). Contacts located outside of these zones may result in mistargeting between the jack and plug contacts.
5. All inside and outside corners in the plug cavity to be .3810 mm (.015 inch) radius max. unless specified.
6. These surfaces shall have 0°15′ maximum draft.
7. Relief inside the dotted areas on both sides of the jack opening is permitted. The 6.8326 mm (.269 inch) Ref and 11.9126 mm (.469 inch) Ref Gauge Requirements must be maintained in each of the corners indicated, (Ref. 1.5240 mm (.060 inch) min), to assure proper plug/jack interface guidance.
8. 4.0640 mm (.160 inch) and 6.2992 mm (0.248 inch) dimensions to be centrally located to jack opening width -W- within ±−. 1270 mm (.005 inch).
9. The contact lengths shall be such that the contacts will always be contained inside the guide slots, and the contacts must move freely in the slots so as not to restrain plug insertion or damage jack contacts.
10. Gauge Requirements:

GO: The jack shall be capable of accepting an 11.7856 x 6.7056 mm (.4640 x .2640 inch) gauge and the gauge shall be capable of being removed with a maximum force of 8.9 newtons (2.0 pounds).

NO GO: The jack shall not accept either a 12.0396 x 6.4516 mm (.4740 x .254 inch) horizontal width of opening gauge or a 6.9596 x 11.5824 mm (.2740 x .456 inch vertical height of opening gauge. However, if the gauge is accepted, the force necessary to remove the gauge shall be a minimum of .83 newtons (3.0 ounces).

Removal forces do not include forces contributed by contact springs nor shall external forces be applied to the jack that will affect these removal forces.

Gauges shall have a .7620 mm (.030 inch) radius on the nose and a .3810 mm (.015 inch) radius on all edges with clearance provided for contacts.

11. With no plug inserted, conductors 1 and 4 are bridged as well as conductors 5 and 8. With a miniature 8-position plug inserted into the jack, the bridge connectors are broken and a series connection can be made in both sides of the line. With a 6-position plug inserted, the bridged connections remain unbroken.
12. The jack contact/bridging interface should be hard gold to hard gold and should have a minimum gold thickness of .0012700 mm (.000050 inch) on each side of the interface. The minimum contact bridging force should be .294 N (30 grams). Any non-gold contact material must be compatible with gold and provide equivalent contact performance.

(e) *50-position miniature ribbon plug:*

(1) Contact finish in the region of contact shall be gold, .0007620 mm (.000030 inch) minimum thickness, electrodeposited hard gold preferred.[1]

(2) ''Datum B'' is the center line of contact cavities.

(3) The center line of each contact shall be located within .2286 mm (.009 inch) of true position with respect to ''Datum B''.[1]

(4) Contact width at region of contact shall be 1.1430±.0508 mm (.045±0.002 inch).[1]

(5) Center line of shell dimension indicated shall be within .1270 mm (.005 inch) of ''Datum B''.[1]

(6) Center line of barrier dimension indicated shall be within .1270 mm (.005 inch) of ''Datum B''.[1]

(7) ''Surface X'' shall have a .0001016 mm (4 microinch) finish or better; finishing shall be done in the direction of the arrow.[2]

(8) A force of not more than 178 newtons (40 pounds) shall be sufficient to fully insert the plug onto the sizing gauge shown on Figure 68.500(e)(1). The plug is fully inserted when ''Surface A'' of the plug[1] touches ''Surface A'' of the sizing gauge.

[1] Figure 68.500(e)(1).

[2] Figures 68.500 (e)(2) and (e)(3).

(9) After one insertion of the plug on the sizing gauge, Figure 68.500(e)(2), a force of not more than 44.5 newtons (10 pounds) shall be sufficient to fully insert the plug on the continuity gauge shown in Figure 68.500(e)(3). The plug is fully inserted on the continuity gauge when ''Surface A'' of the plug[1] touches ''Surface A'' of the continuity gauge.

(10) When the plug is fully inserted on the continuity gauge, Figure 68.500(e)(3), after having been inserted once on the sizing gauge, Figure 68.500(e)(2), all contacts of the plug shall electrically contact the continuity gauge as determined by an electrical continuity test which applies an open circuit voltage of not more than 10 volts, and will not indicate continuity if the resistance of the circuit being checked is more than 200 ohms.

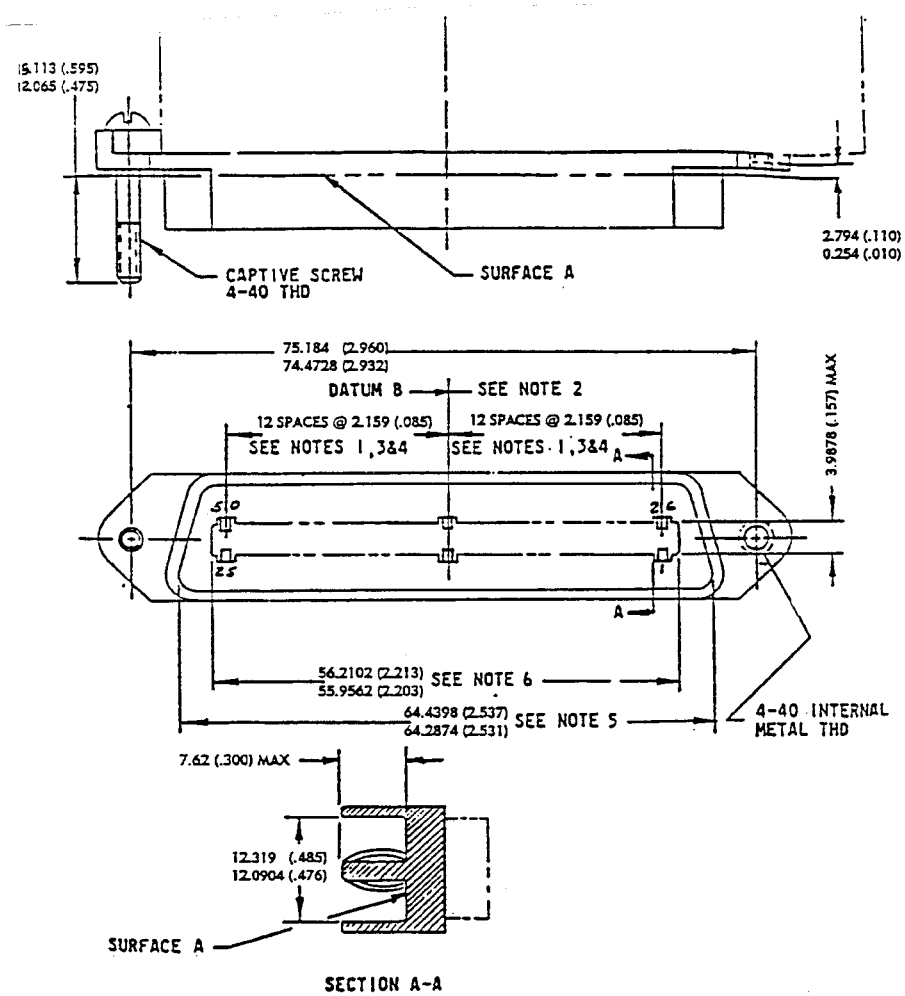

Figure 68.500(a)(1)--50 Position Miniature Ribbon Plug

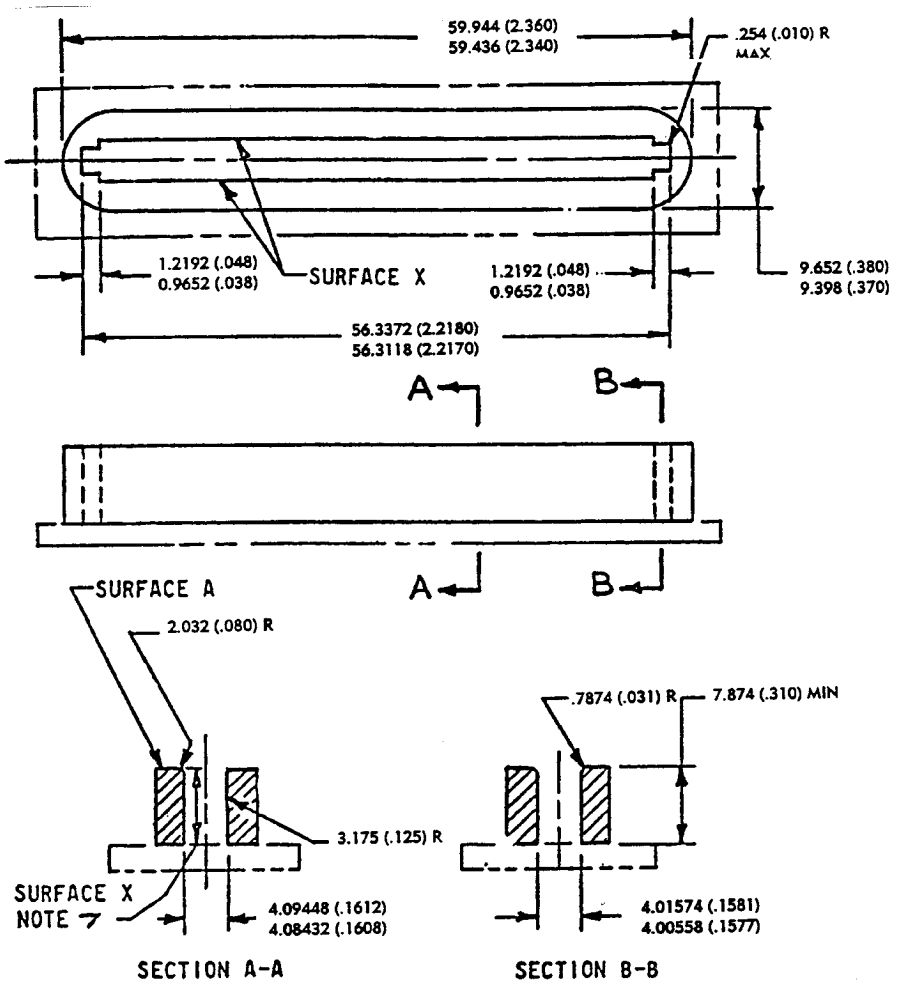

Figure 68.500(e)(2)--50 Position Miniature Ribbon Plug Sizing Guage

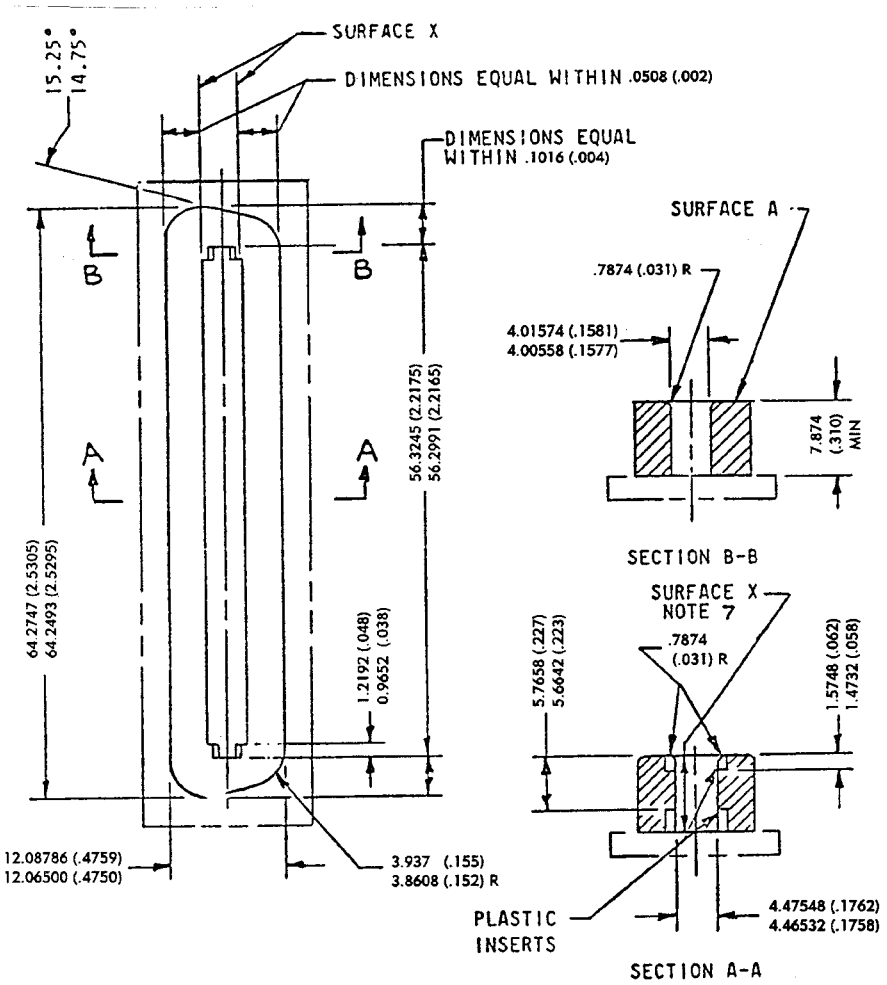

Figure 68.500(e)(3)--50 Position Miniature Ribbon Plug Continuity Guage

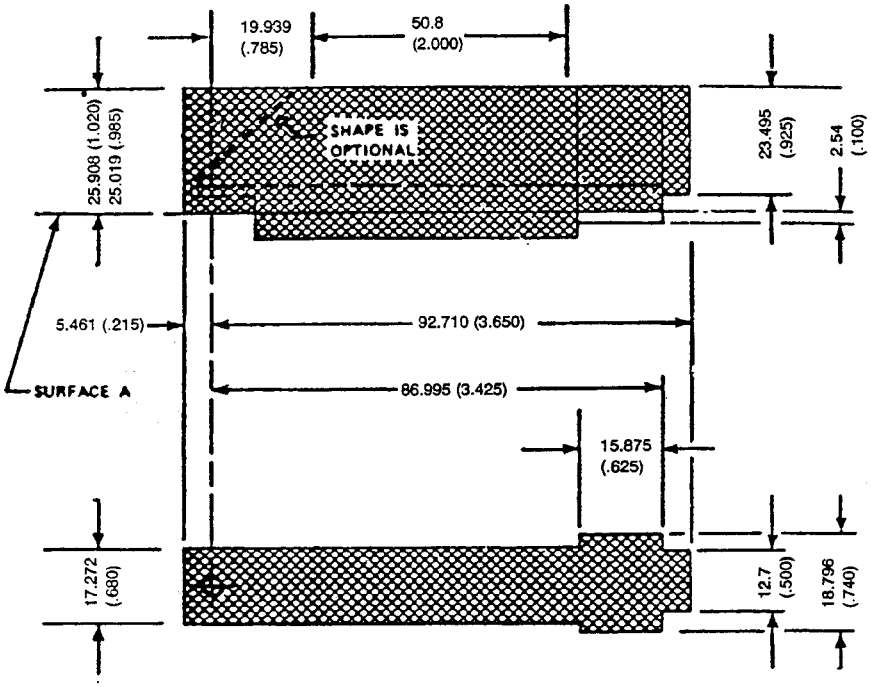

Figure 68.500(e)(4)

50-POSITION MINIATURE RIBBON PLUG - HOOD ENVELOPE

(f) *50-position miniature ribbon jack:*

(1) Contact finish in the region of contact shall be gold, .0007620 mm (.000030 inch) minimum thickness, electrodeposited hard gold preferred.[1]

(2) ''Datum B'' is the center line of contact cavities.

(3) The center line of each contact shall be located within .2286 mm (.009 inch) of true position with respect to ''Datum B''.[1]

(4) Contact width at region of contact shall be 1.1430±.0508 mm (.045±0.002 inch).[1]

(5) Center line of shell dimension indicated shall be within .1270 mm (.005 inch) of ''Datum B''.[1]

(6) Center line of cavity dimension indicated shall be within .1270 mm (.005 inch) of ''Datum B''.[1]

(7) ''Surface X'' shall have a .0001016 mm (4 microinch) finish or better; finishing shall be done in the direction of the arrow.[2]

(8) A force of not more than 134 newtons (30 pounds) shall be sufficient to fully insert the jack onto the sizing gauge shown on Figure 68.500(f)(2).

The jack is fully inserted when ''Surface A'' of the jack[1] touches ''Surface A'' of the sizing gauge.

(9) After one insertion of the jack on the sizing gauge, Figure 68.500(f)(2), a force of not more than 44.5 newtons (10 pounds) shall be sufficient to fully insert the jack on the continuity gauge shown in Figure 68.500(f)(3). The jack is fully inserted on the continuity gauge when ''Surface A'' of the jack[1] touches ''Surface A'' of the continuity gauge.

(10) When the jack is fully inserted on the continuity gauge, Figure 68.500(f)(3), after having been inserted once on the sizing gauge, all contacts of the jack shall electrically contact the continuity gauge as determined by an electrical continuity test which applies an open circuit voltage of not more than 10 volts, and will not indicate continuity if the resistance of the circuit being checked is more than 200 ohms.

[1] Figure 68.500(f)(1).

[2] Figures 68.500 (f)(2) and (f)(3).

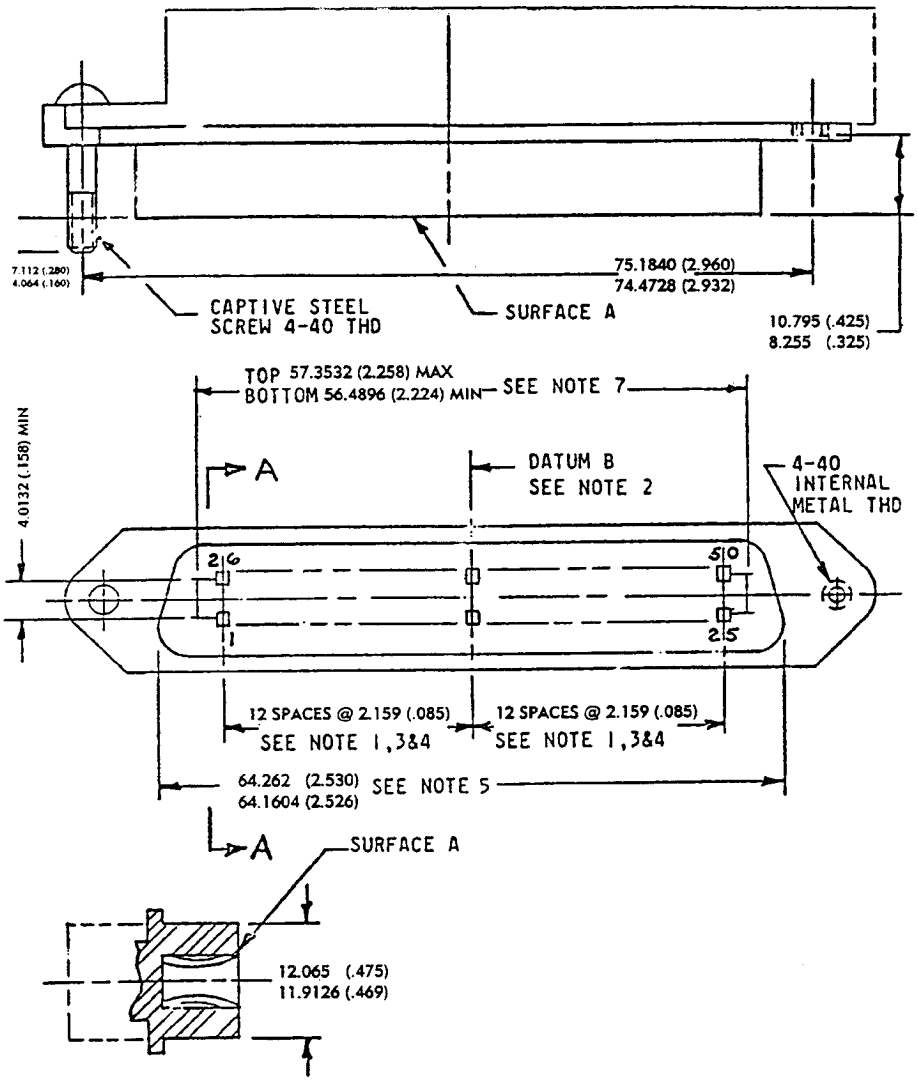

Figure 68.500(f)(1)--50 Position Miniature Ribbon Jack

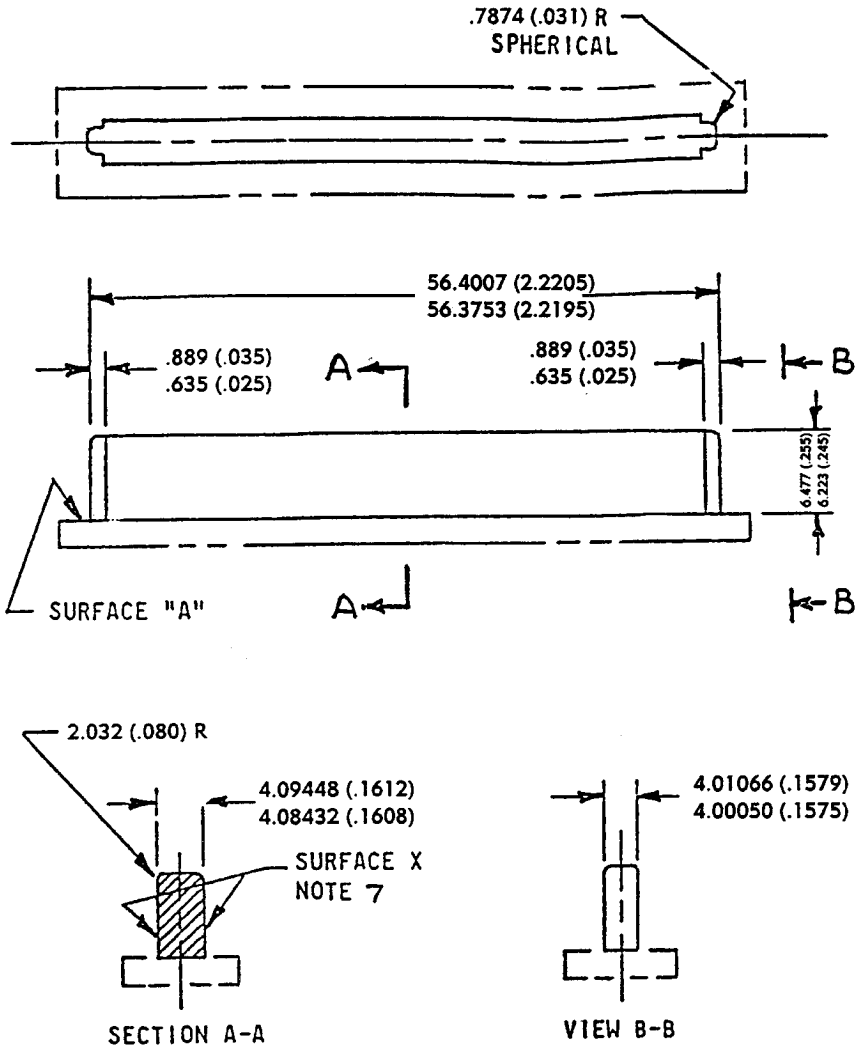

Figure 68.500(f)(2)--50 Position
Miniature Ribbon Jack
Sizing Guage

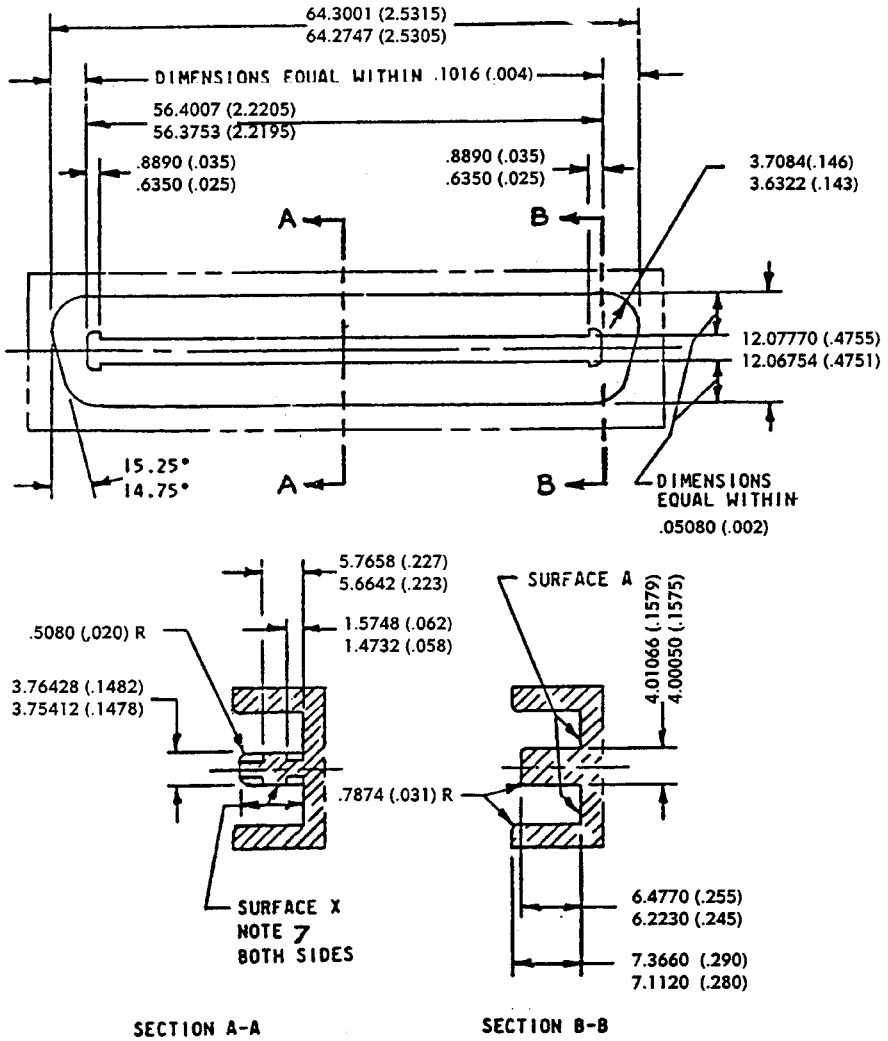

Figure 68.500(f)(3)--50 Position Miniature Ribbon Jack Continuity Gage

(g) *3-Position weatherproof plug:*

Contact blade material shall be brass, with minimum .00762 mm (.0003 inch) thick nickel plating.

NOTE: All linear dimensions are in millimeters (inches).

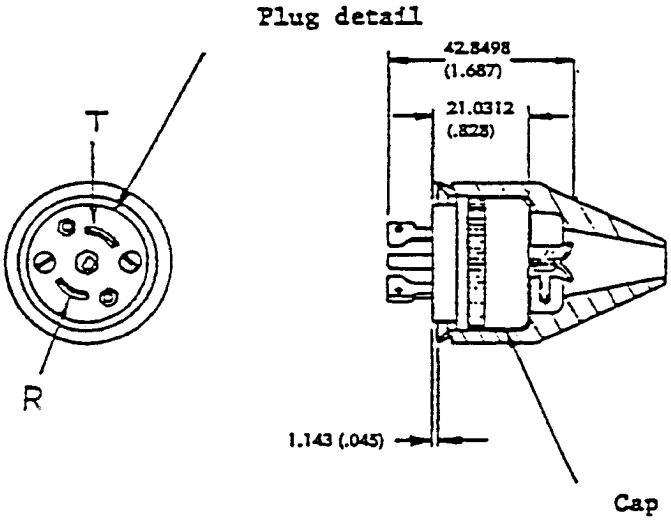

Figure 68.500(g)(1)--3 Position Plug Plug Assembly

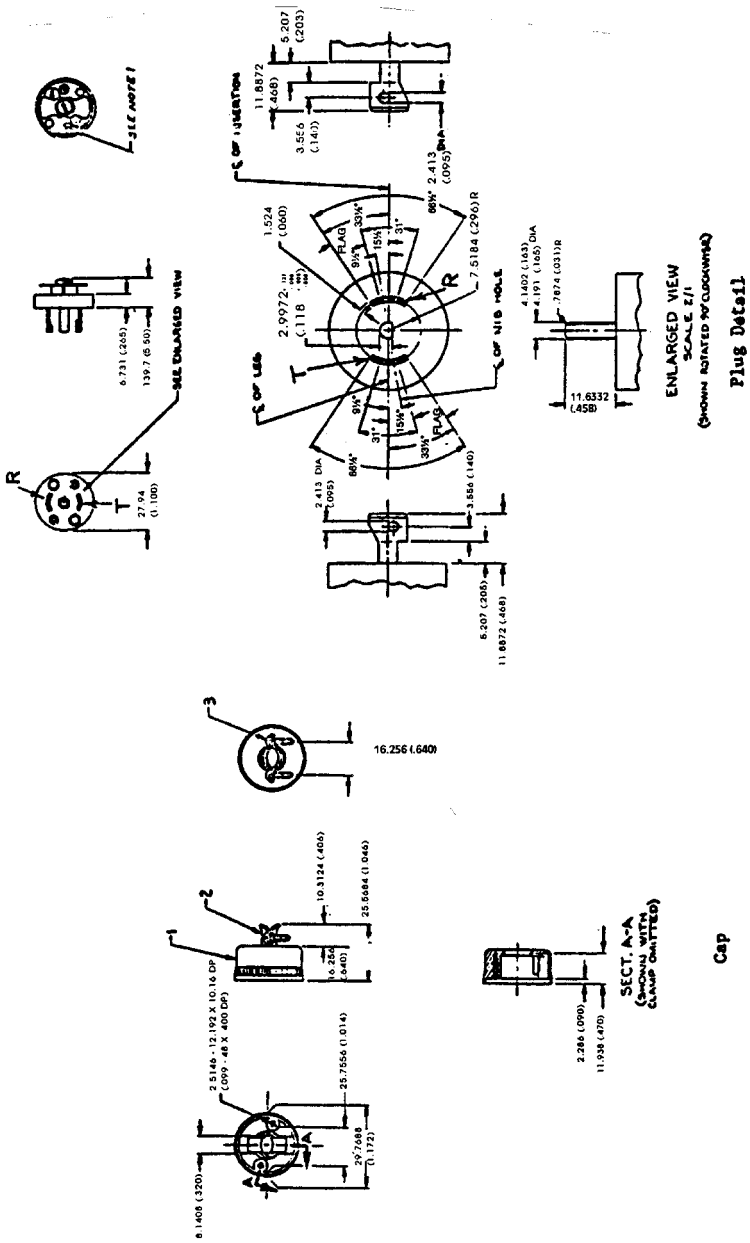

Figure 68.500(g)(2)--3 Position Plug Detail

(h) *3-Position weatherproof jack:*

Contact blade material shall be brass, with minimum .00762 mm (.0003 inch) thick nickel plating.

NOTE: All linear dimensions are in millimeters (inches).

(Note: All linear dimensions are in inches.)

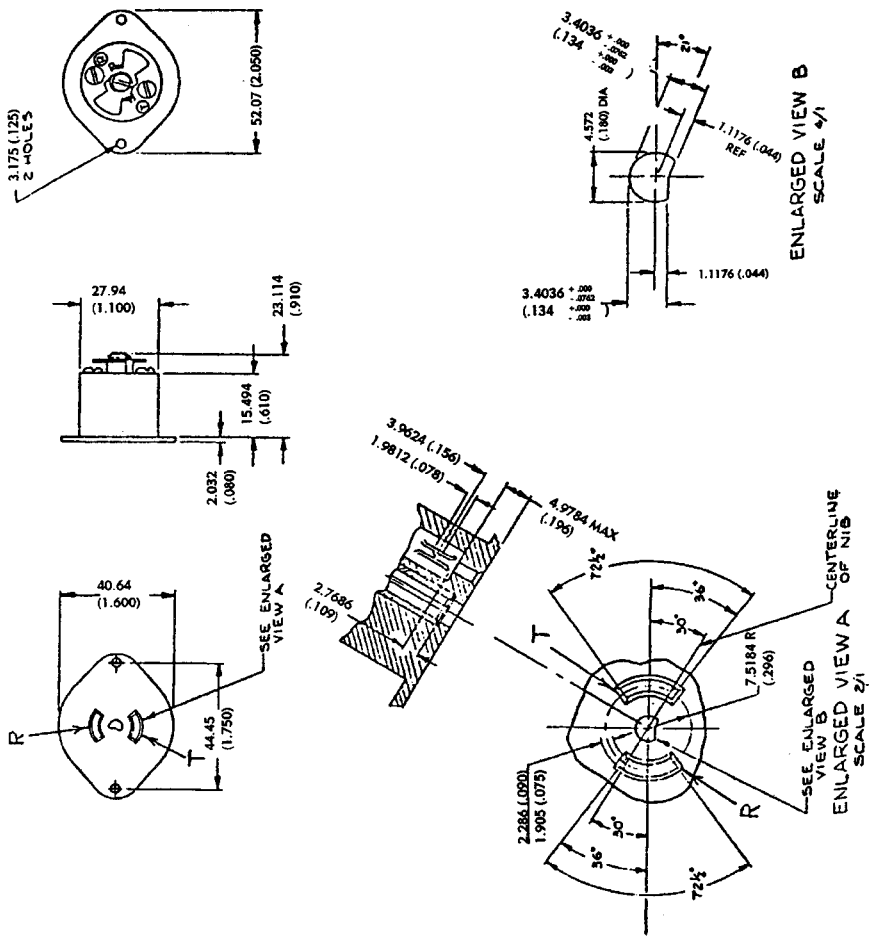

Figure 68.500(h)--3 Position Plug Detail

(Ed. 7/77)

(i) *Miniature 8-position plug, keyed:*

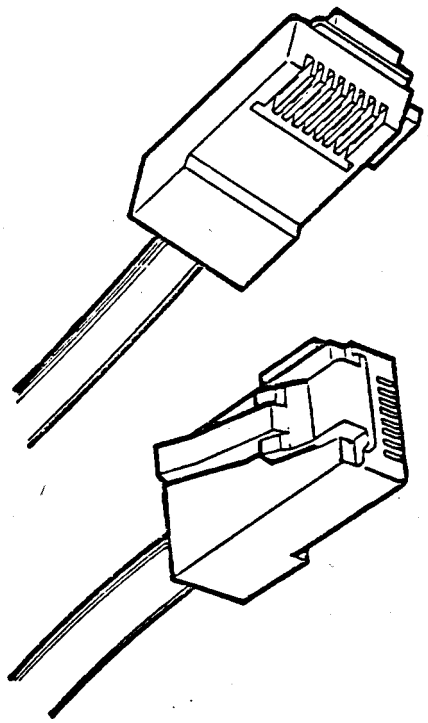

Figure 68.500(i)(1)(i)–View

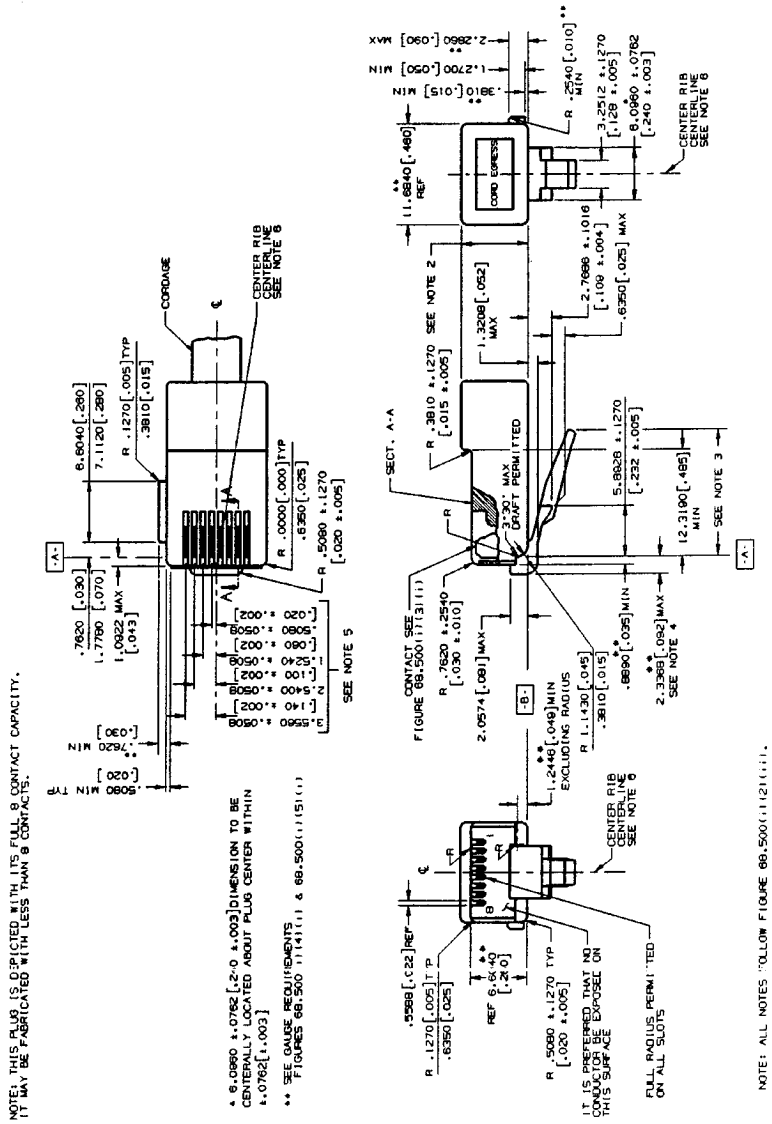

FIGURE 68.500(1)(2)(i)—8 POSITION KEYED PLUG, MECHANICAL SPECIFICATION

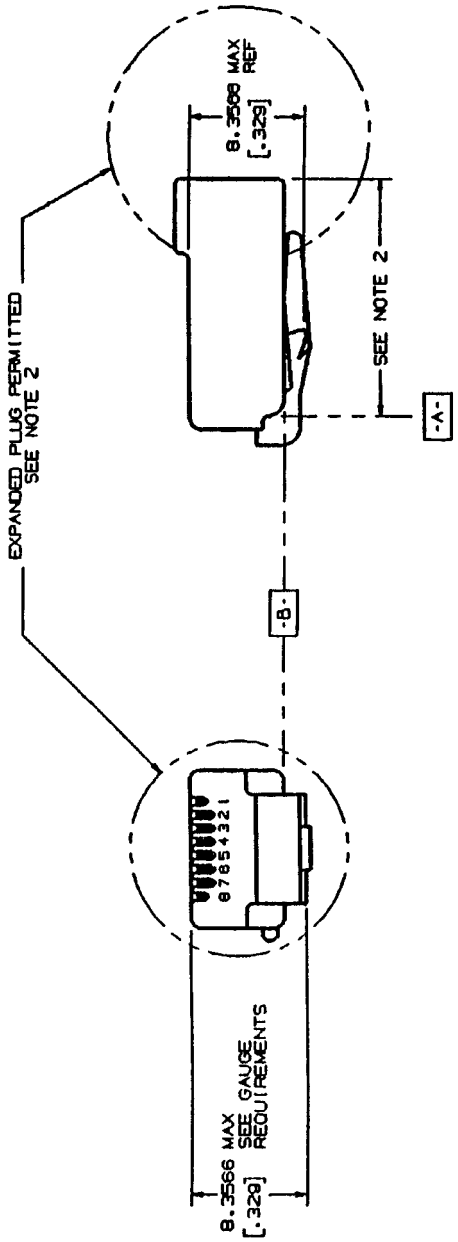

NOTE: ALL NOTES FOLLOW THIS FIGURE

FIGURE 68.500(i)(2)(ii) - 8 POSITION KEYED PLUG, MECHANICAL SPECIFICATION (CONTINUED)

NOTES: (Notes apply to Figures 68.500(i)(2) (i) and 68.500(i)(2)(ii))

1. All plugs must be capable of meeting the requirements of the plug go and no-go gauges.
2. The standard plug height in the area shown is 8.0010 mm (.315 inch) maximum. The standard plug length is 23.1140 mm (.910 inch) maximum. Plugs may be made longer than standard or adapted for direct use on special cords, adapters without cordage, apparatus or equipment subject to the limitations described in the introductory paragraphs of 68.500. Plugs longer and/or higher than standard may inhibit the special features of some network jack enclosures.
3. A 14.6050 mm (.575 inch) minimum tab length is required. It is preferred that maximum tab length be no longer than 15.8750 mm (.625 inch). Longer tabs may be used with the same limitations described in Note 2.
4. To obtain maximum plug guidance in jacks, it is desirable to extend the front plug nose to the 2.3368 mm (.092 inch) maximum.
5. These dimensions apply to the location of jack contact receiving slots. It is desirable that plug contacts be centered axially in these slots, but centering is not required.
6. The center rib centerline shall be coincident with the plug width, 11.6840 mm ref (.460 inch ref.) center line within ± .0762 mm (± .003 inch).

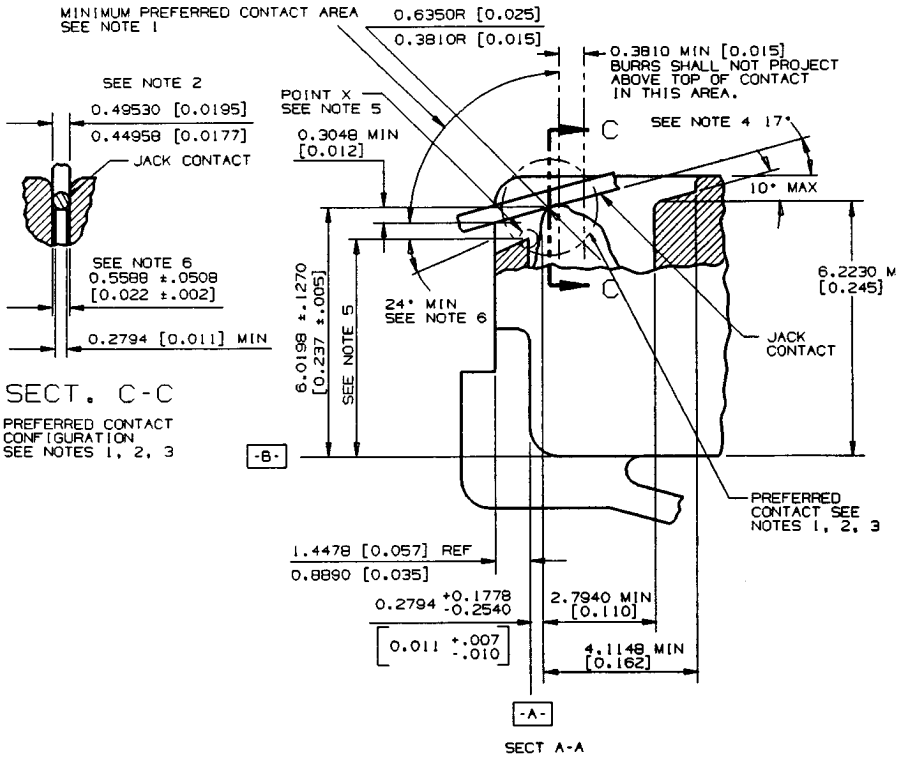

NOTE: ALL NOTES FOLLOW THIS FIGURE.

NOTE: THE 6 POSITION PLUG/JACK CONTACT SPECIFICATION IS IDENTICAL.

FIGURE 68.500(i)(3)(i)- 8 POSITION KEYED PLUG
PLUG /JACK CONTACT SPECIFICATION

NOTES: (Notes apply to Figure 68.500(i)(3)(i))

1. The plug/jack contact interface should be hard gold to hard gold and should have a minimum gold thickness of .0012700mm (.000050 inch) on each side of the interface. The minimum contact force should be .98 N (100 grams). Any non-gold contact material must be compatible with gold and provide equivalent contact performance. A smooth, burr-free surface is required at the interface in the area shown.
2. The jack contact design is based upon .4572 mm (.018 inch) spring temper phosphor bronze round wire in the modular plug blade and jack contact interface. Other contact configurations that provide contact performance equal to or better than the preferred configurations and do not cause damage to the plug or jack are permitted. The preferred jack contact width is .44958/.49530 mm (.0177/.0195 inches). Deviations from the preferred jack contact width are permitted for round contacts as well as noncircular cross sectional shapes but they must be compatible with existing plug configurations. The requirements of Note 1 apply to all possible contact areas.
3. The configuration of the plug contact and the front plastic of the plug should prevent jack contacts from being damaged during plug insertion into jacks.
4. This is the suggested nominal contact angle between plugs and jacks with the plug latched into the jack. If this angle becomes greater than 24 degrees loss of electrical contact may occur between the plug and jack. If the nominal contact angle becomes less than 13 degrees, interference between jack contacts and the internal plastic in the plug may occur.
5. To avoid loss of electrical contact, the preferred dimension from ''Datum B'' to the highest point ''X'' should be 5.0800 mm (.200 inch) max. A dimension greater than 5.3594 mm (.211 inch) may result in loss of electrical contact between plugs and jacks. The 5.3594 mm (.211 inch) max. shall be considered an absolute maximum.
6. The 25 degree min. angle applies only to plugs with front plastic walls higher than 4.8260 mm (.190 inches).

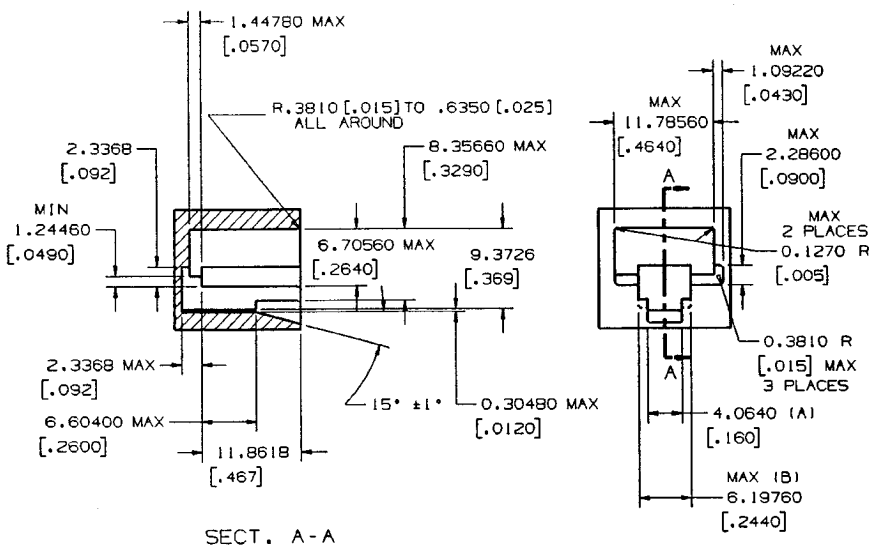

GO GAUGE

NOTES:

1. THE PLUG SHALL BE CAPABLE OF INSERTION AND LATCHING INTO THE GAUGE WITH 22.24 newtons [5 POUNDS] OR LESS INSERTION FORCE. PLUG LATCHING BAR SHALL BE DEPRESSED SO AS NOT TO INTERFERE WITH THE PLUG ENTRY. AFTER INSERTION AND LATCHING, PLUG SHALL BE CAPABLE OF REMOVAL, WITH THE LATCH DEPRESSED, WITH A REMOVAL FORCE OF 44.48 newtons [10 POUNDS] OR LESS APPLIED AT AN ADVANTAGEOUS ANGLE.
2. DIMENSIONS GIVEN TO FOUR DECIMAL PLACES SHALL BE WITHIN ±.0508mm [.002].
3. DIMENSIONS (A) AND (B) TO BE CENTRALLY LOCATED WITH RESPECT TO 11.78560mm [.4640] MAX. JACK OPENING WIDTH WITHIN ±.0254mm[.001].
4. DO NOT SCALE DRAWINGS FOR EXTERNAL CONFIGURATION.

FIGURE 68.500(i)(4)(i)-8 POSITION KEYED PLUG
MAXIMUM PLUG SIZE

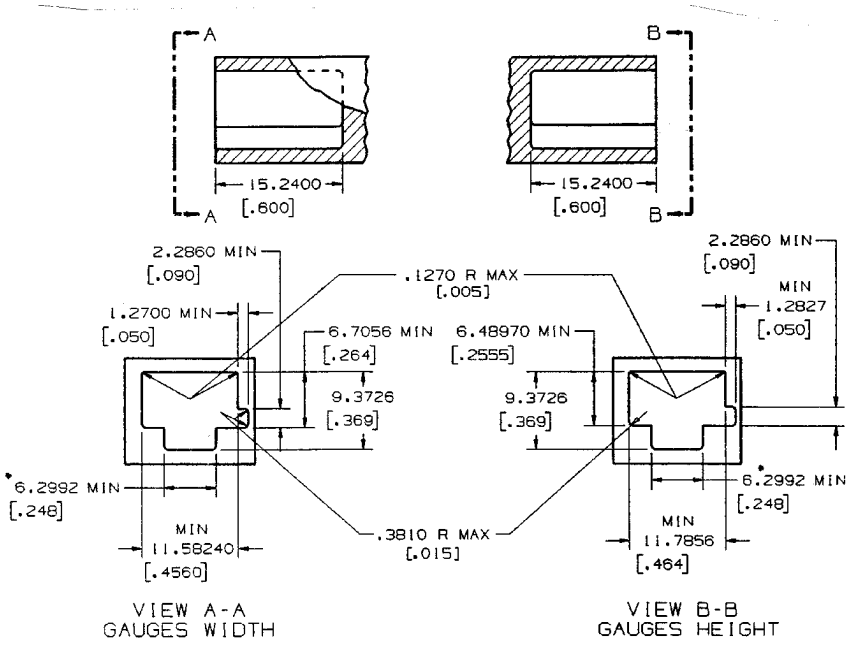

NO-GO GAUGE

NOTES:

1. THE PLUG SHALL NOT BE CAPABLE OF ENTERING THE GAUGE MORE THAN 1.7780mm [.070] BEYOND DATUM-A- (SEE FIGURE 68.500(i)(2)(i) WITH 8.90 newton [2.0 POUNDS] INSERTION FORCE.

2. NON-TOLERANCED DIMENSIONS GIVEN TO FOUR PLACES SHALL BE WITHIN ±.0508mm [.002] .

3. *6.2992mm [.248] DIMENSION TO BE CENTRALLY LOCATED WITH RESPECT TO 11.7856mm [.464] MINIMUM AND 11.58240mm [.4560] MINIMUM WITHIN ±.0508mm [.002] .

FIGURE 68.500(i)(5)(i)-8 POSITION KEYED PLUG, MINIMUM PLUG SIZE

(j) *Miniature 8-position keyed jack:*

Figure 68.500(j)(1)--View

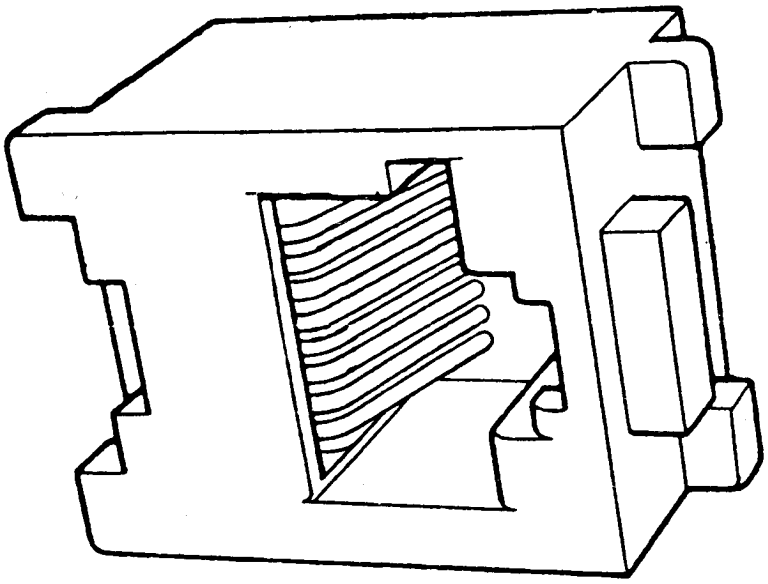

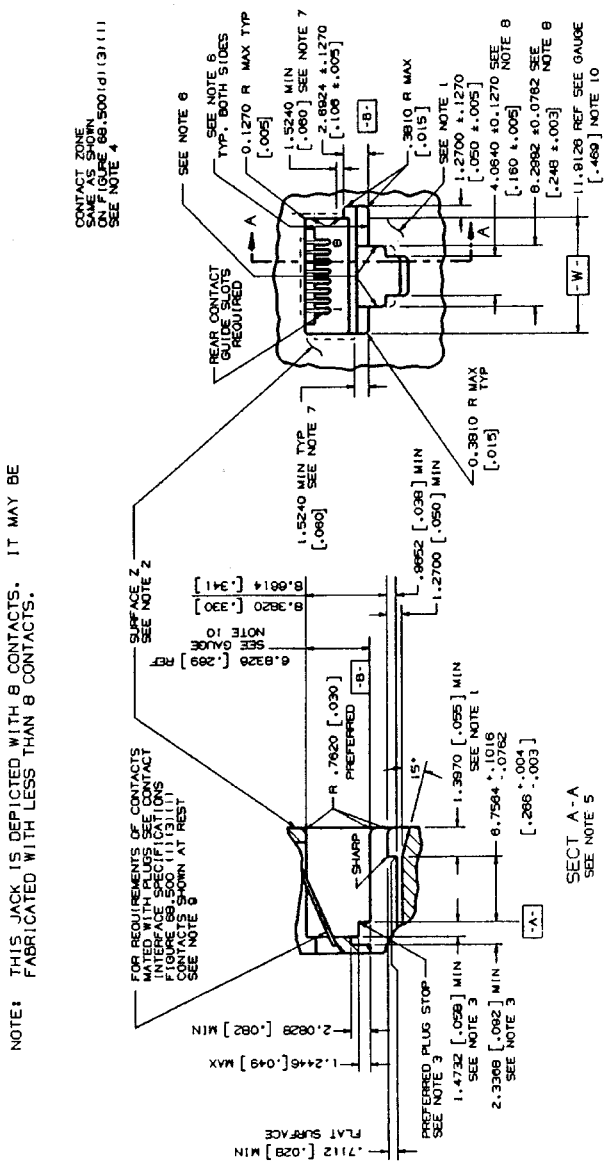

FIGURE 68.500(j)(2)(i)-8 POSITION KEYED JACK MECHANICAL SPECIFICATION

NOTES: (Notes apply to Figure 68.500(j)(2)(i))

1. Front surface projections beyond the 1.3970 mm (.055 inch) minimum shall be configured so as not to prevent finger access to the plug release catch (Reference Figure 68.500(i)(2)(ii) and 8-Position Plug, Mechanical Specifications). A catch length greater than 1.3970 mm (.055 inch) is beneficial in providing for greater breakout strength and improved guidance when interfacing with a 6-position plug.
2. Surface Z need not be planar or coincident with the surface under the plug release catch. Surface Z projections must not prevent insertion, latching, and unlatching of the standard 8-position plug on Figure 68.500(i)(2)(i).
3. The preferred plug stop surface is indicated. If some other internal feature is used as a plug stop, it must be located so that the axial movement of a latched plug is no greater than 1.1430 mm (.045) inch.
4. To prevent mistargeting between the plug and jack contacts, the jack contacts should be completely contained in their individual contact zones, (.7112 mm (.028 inch) max wide), where they extend into the jack openings. There is no location requirement for jack contacts below these zones (5.8420 mm (.230 inch) max), but adequate contact separation must be maintained to prevent electrical breakdown. These shaded contact zones should be centrally located, (include all locating tolerances), about the jack opening width 11.9126 mm (.469 inch) Ref, (Datum–W–). Contacts located outside of these zones may result in mistargeting between the jack and plug contacts.
5. All inside and outside corners in the plug cavity to be .3810 mm (.015 inch) radius max unless specified.
6. These surfaces shall have 0°15′ maximum draft.
7. Relief inside the dotted areas on both sides of the jack opening is permitted. The 6.8326 mm (.269 inch) Ref and 11.9126 mm (.469 inch) Ref Gauge Requirements must be maintained in each of the corners indicated, (Ref. 1.5240 mm (.060 inch) min), to assure proper plug/jack interface guidance.
8. 4.0640 mm (.160 inch) and 6.2992 mm (.248 inch) dimensions to be centrally located to jack opening width –W– within ±.1270 mm (.005).
9. The contact lengths shall be such that the contacts will always be contained inside the guide slots and the contacts must move freely in the slots so as not to restrain plug insertion or damage jack contacts.
10. Gauge Requirements:

GO: The jack shall be capable of accepting and 11.78560 × 6.70560 mm (.4640 × .2640 inch) gauge and the gauge shall be capable of being removed with a maximum force of 8.9 newtons (2.0 pounds).

NO GO: The jack shall not accept either a 12.03960 × 6.4516 mm (.4740 × .254 inch) horizontal width of opening gauge or a 6.95960 × 11.5824 mm (.2740 × .456 inch) vertical height of opening gauge. However, if the gauge is accepted, the force necessary to remove the gauge shall be minimum of .83 newtons (3.0 ounces).

Removal forces do not include forces contributed by contact springs nor shall external forces be applied to the jack that will affect these removal forces.

Gauges shall have a .7620 mm (.030 inch) radius on the nose and a .3810 mm (.015 inch) radius on all edges with clearance provided for contracts.

[41 FR 28699, July 12, 1976, as amended at 45 FR 52151, Aug. 6, 1980; 50 FR 27251, July 2, 1985; 58 FR 44907, Aug. 25, 1993]

§ 68.502 Configurations.

This section describes connection configurations which telephone subscribers may request their local telephone company to provide, in accordance with § 68.104 of these rules. In the absence of a request for a specific jack configuration, the telephone company shall install the standard jack depicted in § 68.502(a)(1). The listed configurations are for connections to be made by the telephone company to the standard jacks specified in this subpart. Plugs on registered terminal equipment and registered protective circuitry shall be wired so as to be compatible with the jack connections specified herein. The following nomenclature is used in this section:

T/R—Connections to the ''tip'' and ''ring'' wires of a telephone communications line, trunk, channel or facility.

A/A1—Connections to the ''hold'' functions of key telephone systems which use such connections. In such systems, the ''A'' lead corresponding to a particular telephone line is shorted to the ''A1'' lead when that line is placed in the ''off-hook'' state to permit proper operation of the ''hold'' functions associated with that line.

MB/MB1—Connections to leads implementing a make-busy feature where required. The MB lead is shorted by the terminal equipment to the MB1 lead when the corresponding telephone line is to be placed in an unavailable, or artificially busy condition.

Bridged—A bridged connection is a parallel connection.

Data—Data configurations are those which use jacks incorporating components to

limit signal power levels of data equipment. Data equipment with a maximum signal power output of −9 dBm may be connected to other than data configurations. *See* § 68.308 of these rules.

A ''USOC'' (Universal Service Ordering Code) is specified for each configuration. These USOCs are generic telephone company service ordering codes. If a telephone subscriber wishes to have the telephone company install a standard jack other than the one depicted in § 68.502(a)(1) below, he shall specify the appropriate USOC when requesting the installations.

(a) *Bridged configurations other than data; single line connections*—(1) *Bridged T/R; 6-position jack.*

ELECTRICAL NETWORK CONNECTION: Single line bridged tip and ring only—Conductors 1, 2, 5 and 6 are reserved for telephone company use.

UNIVERSAL SERVICE ORDER CODE (USOC): RJ11W for Portable Wall-Mounted equipment—RJ11C all others.

MECHANICAL ARRANGEMENT: Miniature 6 position jack.

TYPICAL USAGE: Single line non-key telephone, ancillary devices, PBXs and key telephone systems.

WIRING DIAGRAM:

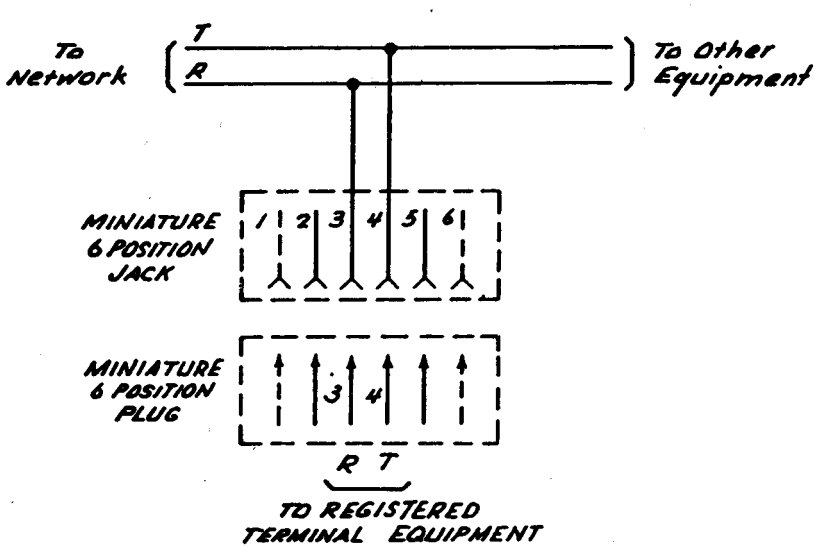

(2) *Bridged T/R; 3-position weatherproof jack.*

ELECTRICAL NETWORK CONNECTION: Single line bridged tip and ring.

UNIVERSAL SERVICE ORDER CODE: RJ15C.

MECHANICAL ARRANGEMENT: 3 position weatherproof jack.

TYPICAL USAGE: Providing telephone service to boats in marinas.

WIRING DIAGRAM:

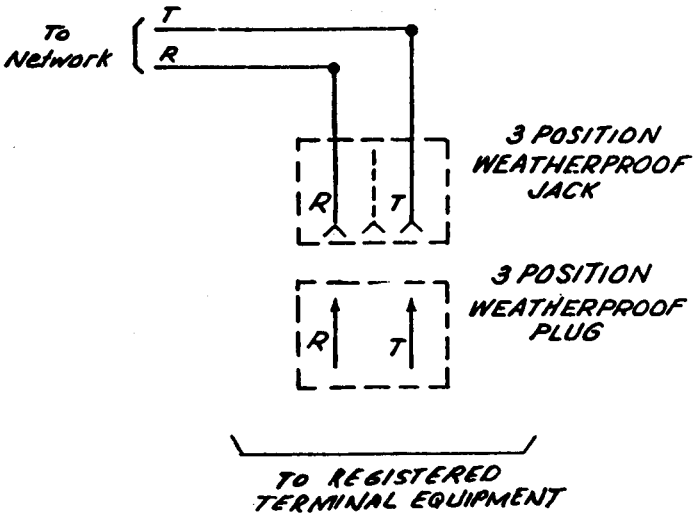

(3) *Bridged T/R with make-busy arrangement; 6-position jack.*

ELECTRICAL NETWORK CONNECTION: Single-line bridged tip and ring only with MB/MB1 leads. Conductors 2 and 5 are reserved for telephone company use.

UNIVERSAL SERVICE ORDER CODE (USOC): RJ18W for portable wall-mounted equipment—RJ18C for all others.

MECHANICAL ARRANGEMENT: Miniature 6-position jack.

TYPICAL USAGE: Single-line non-key telephone and ancillary devices connected directly to central office lines, where a make-busy requirement is needed.

WIRING DIAGRAM:

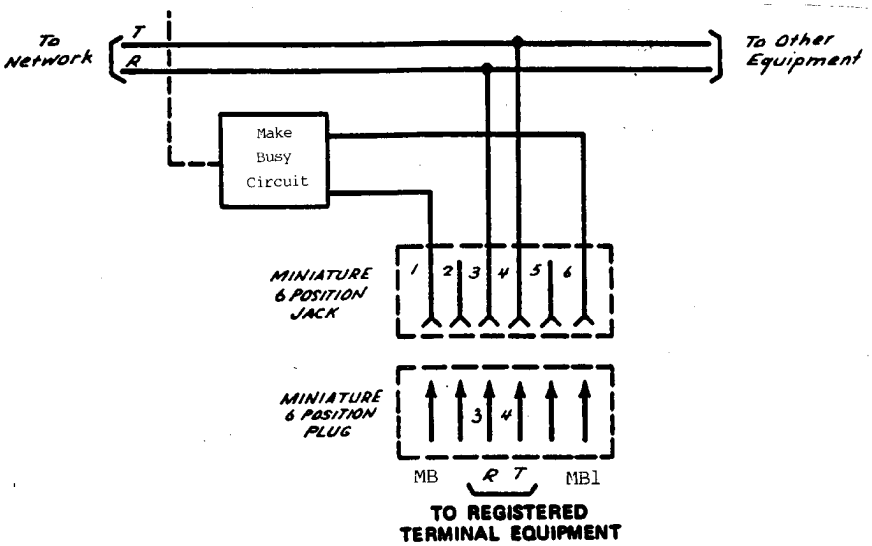

(b) *Series configurations*—(1) *Series T/R ahead of all station equipment; 8-position series jack.*

ELECTRICAL NETWORK CONNECTION: Series tip and ring ahead of all station equipment. Conductors 2, 3, 6 and 7 are reserved for telephone company use.

UNIVERSAL SERVICE ORDER CODE (USOC): RJ31X.

MECHANICAL ARRANGEMENT: Miniature 8 position series jack.

TYPICAL USAGE: Alarm reporting devices.

WIRING DIAGRAM:

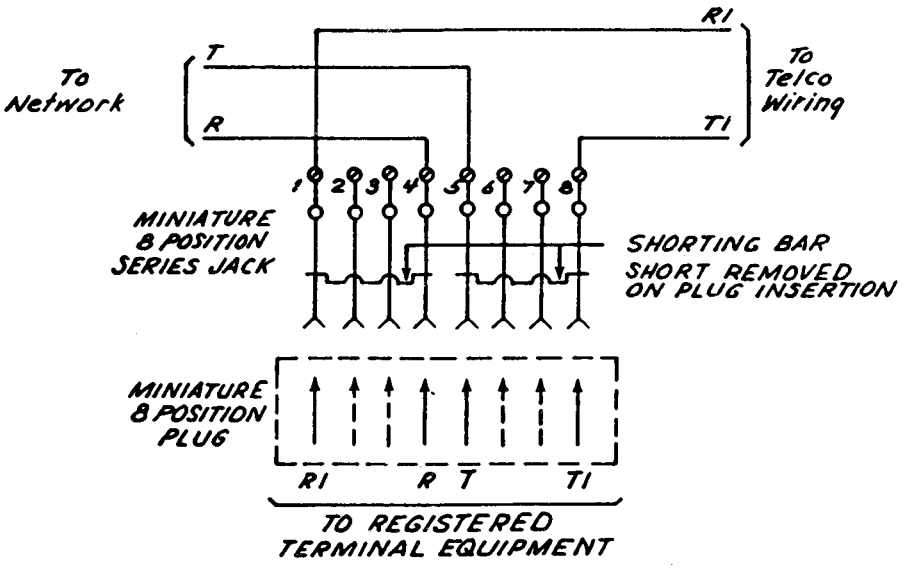

(2) [Reserved]

(3) *Series single-line tip and ring ahead of all station equipment; 8-position series jack equipped with continuity circuit.*

ELECTRICAL NETWORK CONNECTION: Series tip and ring ahead of all station equipment with continuity circuit. Conductors 3 and 6 are reserved for telephone company use.

UNIVERSAL SERVICE ORDER CODE (USOC): RJ38X.

MECHANICAL ARRANGEMENT: Miniature 8-position series jack.

TYPICAL USAGE: Alarm reporting devices.

WIRING DIAGRAM:

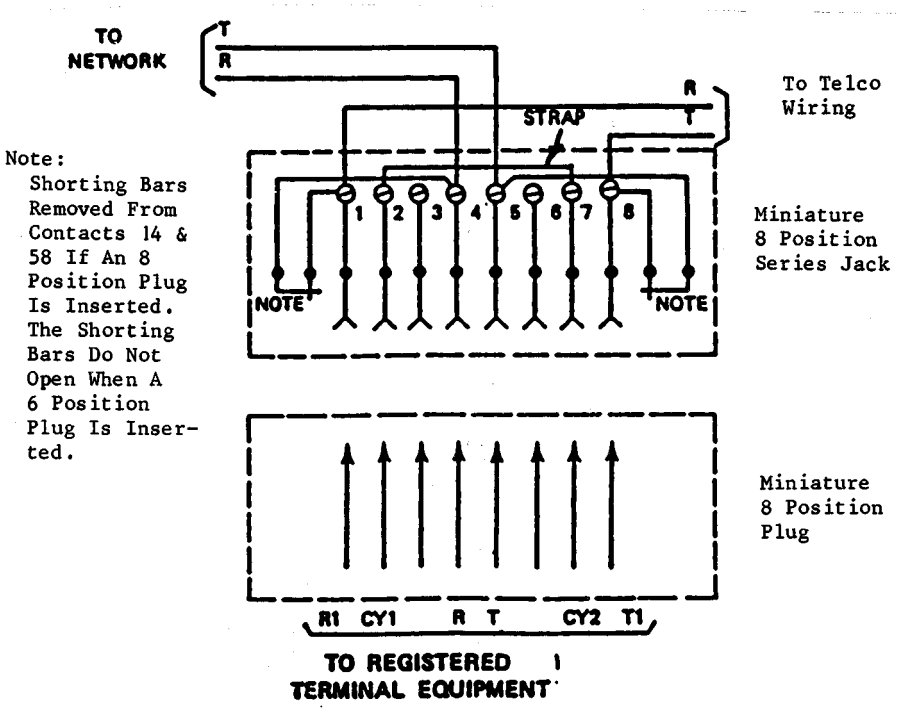

(c) *Two-line configurations*—(1) *Bridged T/R; 6-position jack.*

ELECTRICAL NETWORK CONNECTION: Two line bridged tip and ring.

UNIVERSAL SERVICE ORDER CODE (USOC): RJ14W for Portable Wall-Mounted equipment—RJ14C for all others.

MECHANICAL ARRANGEMENT: Miniature 6-position jack.

TYPICAL USAGE: Two line non-key telephone sets and ancillary devices.

WIRING DIAGRAM:

NOTE: The telephone company will wire the lines to the jack in the sequence designated by the customer.

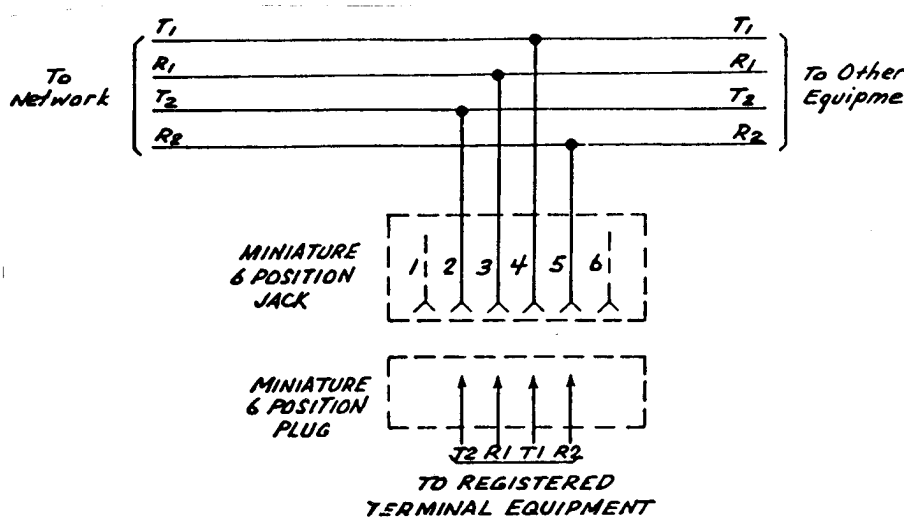

(d) *Multiple-line bridged configurations*—(1) *Up to 25 bridged T/R; 50-position jack.*

ELECTRICAL NETWORK CONNECTION: Multiple line bridged tip and ring.

UNIVERSAL SERVICE ORDER CODE (USOC): RJ21X.

MECHANICAL ARRANGEMENT: 50-position miniature ribbon jack.

TYPICAL USAGE: Traffic data recording systems, PBXs and key telephone systems.

WIRING DIAGRAM:

NOTE: At the time the jack is ordered the customer must specify the sequence in which the central office lines are to be connected to the jack. The telephone company will consecutively wire these lines to the jack as shown below without skipping any positions.

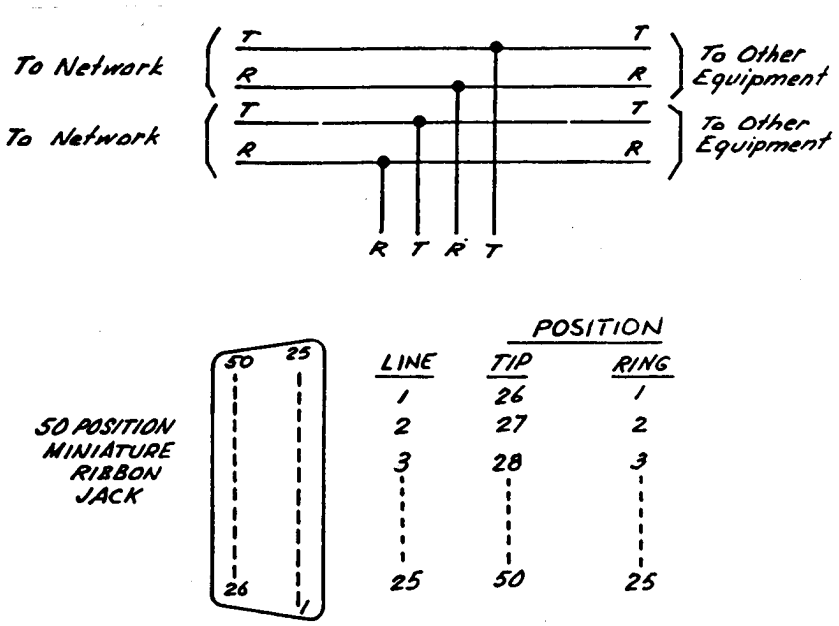

(2) *Bridged multiple-line 50-position T/R with make-busy arrangement.*

ELECTRICAL NETWORK CONNECTION: Multiple line bridge tip and ring with MB/MB1 leads for make-busy indication.

UNIVERSAL SERVICE ORDERING CODE (USOC): RJ2MB.

MECHANICAL ARRANGEMENT: 50-position miniature ribbon jack.

TYPICAL USAGE: 2–12 non-key telephone and ancillary devices connected directly to central office lines where a make-busy requirement is needed.

WIRING DIAGRAM:

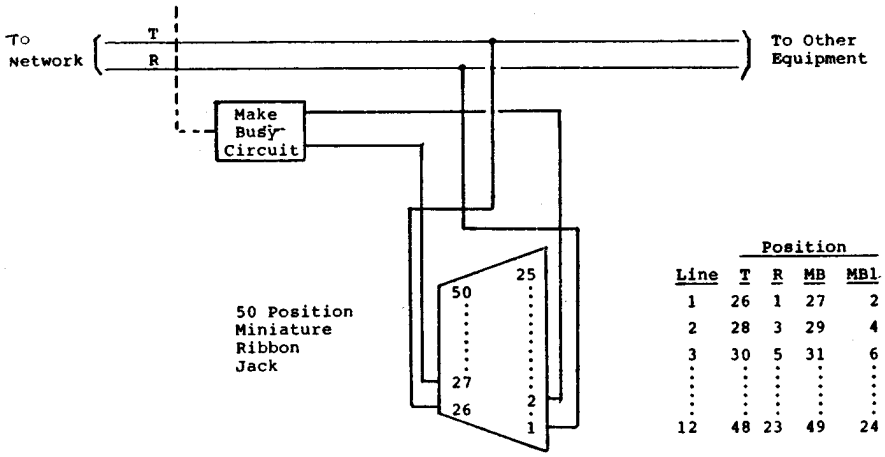

(e) *Data configurations.* There are two categories of data configurations, which may be implemented either on an 8 position keyed data jack, or on a 50 position unkeyed ribbon jack. These are: a ''universal'' configuration, which incorporates both a programming resistor (for programmed data signal power limiting) and an attenuator (for ''fixed-loss loop'' data signal power limiting), and a ''programmed'' configuration, which incorporates a programming resistor, but not an attenuator. The programming resistor is selected as follows:

The proper programming resistor (Rp) shall be selected by the telephone company at the time of installation based upon the loop loss of the telephone line to arrive at the optimum signal power level of −12 dBm at the central office. The table shown below gives the required signal power output for the programmed data equipment for each value of the programming resistor.

Programming Resistor (Rp)*	Programmed Data Equipment Signal Power Output**
short	0 dbm
150 ohms	−1 dbm
336 ohms	−2 dbm
569 ohms	−3 dbm
866 ohms	−4 dbm
1,240 ohms	−5 dbm
1,780 ohms	−6 dbm
2,520 ohms	−7 dbm
3,610 ohms	−8 dbm
5,490 ohms	−9 dbm
9,200 ohms	−10 dbm
19,800 ohms	−11 dbm
open	−12 dbm

*Tolerance of Rp is ± 1%.
**Tolerance of programmed data equipment signal power output is ± 1 dB.

The voltages impressed on resistor Rp by the data equipment shall be such as not to cause power dissipation in Rp in excess of 50 milliwatts.

The circuit shown below was used in calculating values of the programming resistors and may be useful in implementing the automatic control of signal power output in the programmed data equipment.

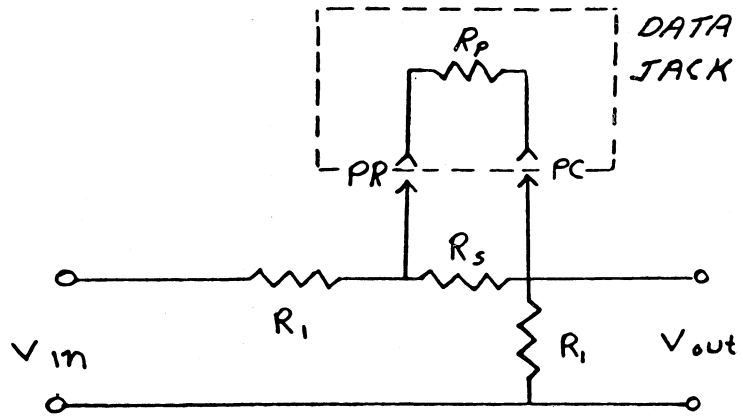

R1 is the source impedance for the input signal Vin, and also the terminating impedance of the load. R_S is a series resistance, on which the computation of the programming resistor Rp is based. The table of values of Rp is derived for R_1=600 ohms; R_S=3600 ohms.

In ''universal'' configurations, the proper attenuator shall be installed or adjusted by the telephone company at the time of installation, based upon the loop loss of the telephone line, to arrive at the optimum power level of −12 dBm at the central office, with a data device maximum signal power level of −4 dBm.

The switch which is incorporated in ''universal'' configurations shall be operated to the position appropriate for the type of data equipment which is connected.

(1) *Bridged T/R; 8-position keyed data jack—Universal.*

ELECTRICAL NETWORK CONNECTION: Single line bridged tip and ring.

UNIVERSAL SERVICE ORDER CODE: RJ41S.

MECHANICAL ARRANGEMENT: Single miniature 8-position keyed jack for surface mounting.

TYPICAL USAGE: Universal jack for fixed loss loop (FLL) or programmed (P) types of data equipment.

WIRING DIAGRAM:

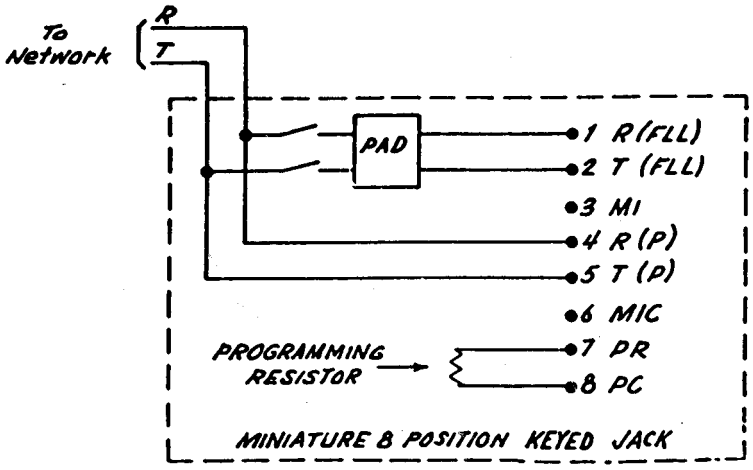

(2) *Bridged T/R; 8-position keyed data jack—Programmed.*

ELECTRICAL NETWORK CONNECTION: Single line bridged tip and ring.

UNIVERSAL SERVICE ORDER CODE: RJ45S.

MECHANICAL ARRANGEMENT: Single miniature 8-position keyed jack for surface mounting.

TYPICAL USAGE: Programmed data equipment.

WIRING DIAGRAM:

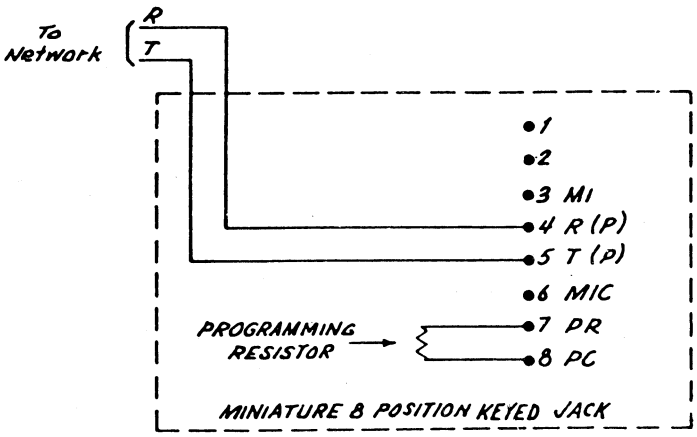

(3) *Multiple bridged T/R; 8-position keyed data jack—Universal.*

ELECTRICAL NETWORK CONNECTION: Multiple line bridged tip and ring.
UNIVERSAL SERVICE ORDER CODE: RJ41M.
MECHANICAL ARRANGEMENT: Up to 8 miniature 8-position keyed jacks in multiple mounting arrangement.
TYPICAL USAGE: Multiple installations of fixed loss loop or programmed types of data equipment.
WIRING DIAGRAM: Multiple arrangement of § 68.502(e)(1).

(4) *Multiple bridged T/R; 8-position keyed data jack—Programmed.*

ELECTRICAL NETWORK CONNECTION: Multiple line bridged tip and ring.
UNIVERSAL SERVICE ORDER CODE: RJ45M.
MECHANICAL ARRANGEMENT: Up to 8 miniature 8-position keyed jacks in multiple mounting arrangement.
TYPICAL USAGE: Multiple installations of programmed types of data equipment.
WIRING DIAGRAM: Multiple arrangement of § 68.502(e)(2).

(5) *Bridged T/R; 50-position ribbon jack—Universal.*

ELECTRICAL NETWORK CONNECTION: Single or multiple line bridged tip and ring.
UNIVERSAL SERVICE ORDER CODE: RJ26X.
MECHANICAL ARRANGEMENT: 50-position miniature ribbon jack.
TYPICAL USAGE: Universal jack for fixed loss loop (FLL) or programmed (P) types of data equipment.
WIRING DIAGRAM:

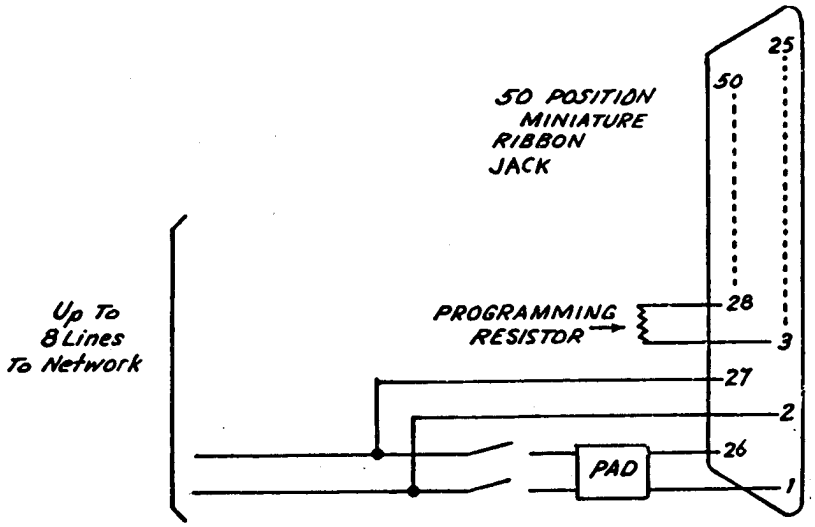

Line	Position					
	FLL		P		PR	PC
	T	R	T	R		
1	26	1	27	2	28	3
2	29	4	30	5	31	6
3	32	7	33	8	34	9
4	35	10	36	11	37	12
5	38	13	39	14	40	15
6	41	16	42	17	43	18
7	44	19	45	20	46	21
8	47	22	48	23	49	24

NOTE: At the time the jack is ordered, the customer shall specify the number of and sequence of central office lines to be connected to the jack. The telephone company will consecutively wire these lines to the jack in accordance with the table above, without skipping any positions.

(6) *Bridged T/R; 50-position ribbon jack—Programmed.*

ELECTRICAL NETWORK CONNECTION: Single or multiple line bridged tip and ring.
UNIVERSAL SERVICE ORDER CODE: RJ27X.
MECHANICAL ARRANGEMENT: 50-position miniature ribbon jack.
TYPICAL USAGE: Programmed jack for programmed (P) types of data equipment.
WIRING DIAGRAM:

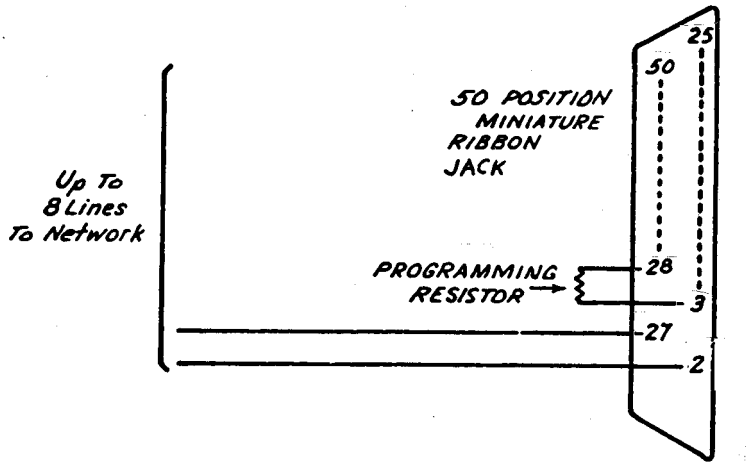

Line	Position			
	P		PR	PC
	T	R		
1	27	2	28	3
2	30	5	31	6
3	33	8	34	9
4	36	11	37	12
5	39	14	40	15
6	42	17	43	18
7	45	20	46	21
8	48	23	49	24

NOTE: At the time the jack is ordered, the customer shall specify the number of and sequence of central office lines to be connected to the jack. The telephone company will consecutively wire these lines to the jack in accordance with the table above, without skipping any positions.

(f) *Multiple line series configurations*—(1) *Up to eight (8) position jacks.* Multiple series jacks in this category consist of multiple arrangements of configurations specified in paragraph (b) of this section, in a multiple mounting arrangement. Such multiple arrangements may be ordered as a unit under the following:

UNIVERSAL SERVICE ORDER CODE: RJ31M: Multiple series T/R ahead of all station equipment (reference § 68.502(b)(1)).

[41 FR 28699, July 12, 1976, as amended at 44 FR 7959, Feb. 8, 1979; 46 FR 38516, July 28, 1981; 50 FR 47549, Nov. 19, 1985; 50 FR 49930, Dec. 6, 1985; 51 FR 951, Jan. 9, 1986]

§ 68.504 Universal patent license agreement.

UNIVERSAL PATENT LICENSE AGREEMENT

Effective as of ——— WESTERN ELECTRIC COMPANY, INCORPORATED, a New York corporation (''WESTERN''), having an office at 222 Broadway, New York, New York 10038, and ——————— (''the CORPORATION''), having an office at ——————— agree as follows:

ARTICLE I—DEFINITIONS

1.01 Terms in this agreement (other than technical terms, names of parties, companies and Article headings) which are in capital letters shall have the meanings specified in the General Definitions Appendix, and technical terms in this agreement which are in capital letters shall have the meanings specified in the Technical Definitions Appendix.

ARTICLE II—GRANTS OF LICENSES AND IMMUNITIES

2.01 WESTERN grants to the CORPORATION under WESTERN'S PATENTS nonexclusive licenses for products of the following kinds:

———————————————————

———————————————————

———————————————————

2.02 All licenses herein granted shall commence on the effective date hereof and, except as provided in Article V and notwithstanding the expiration of the FIVE YEAR PERIOD, shall continue for the entire terms that the patents under which they are granted are in force or for that part of such terms for which WESTERN has the right to grant such licenses.

2.03 WESTERN grants under all patents issued in countries other than the United States and owned or controlled by AMERICAN TELEPHONE AND TELEGRAPH COMPANY, a New York corporation (''AT&T''), WESTERN or their SUBSIDARIES, royalty-free immunity relating to the sale, lease or use in, or the importation into, such other countries of LICENSED PRODUCTS, and maintenance parts therefor, manufactured under the licenses granted under WESTERN'S PATENTS: provided, however, that nothing in this section 2.03 shall relieve the CORPORATION of its obligation to pay any royalty which may be predicated upon such manufacture of any such LICENSED PRODUCT or part, whether or not the first sale, lease or use thereof occurs outside of the United States.

2.04 The licenses granted for LICENSED PRODUCTS are licenses to make, have made, use, lease and sell such LICENSED PRODUCTS. Such licenses include the rights to maintain LICENSED PRODUCTS, to practice methods and processes involved in the use of LICENSED PRODUCTS and to make and have made, to use and have used, and to maintain machines, tools, materials and other instrumentalities, and to use and have used methods and processes, insofar as such machines, tools, materials, other instrumentalities, methods and processes are involved in or incidental to the development, manufacture, installation, testing or repair of LICENSED PRODUCTS.

2.05 The grant of each license to the CORPORATION includes the right to grant sublicenses within the scope of such license to its SUBSIDIARIES. Such right may be exercised at any time prior to termination or cancellation of the corresponding license under the provisions of Article V. Any such sublicenses granted to any present SUBSIDIARY may be made effective, retroactively, as of the effective date hereof, and any such sublicenses granted to any future SUBSIDIARY may be made effective, retroactively, as of the date such company became a SUBSIDIARY.

2.06 It is recognized that WESTERN or any of its ASSOCIATED COMPANIES may have entered into or may hereafter enter into a contract with a national government to do development work financed by such government and may be required under such contract (either unconditionally or by reason of any action or inaction thereunder) to assign to such government its rights to grant, or may now or hereafter be restrained by such government from granting, licenses or immunities to others than its ASSOCIATED COMPANIES under patents for inventions arising out of such work or covered by such contract. The resulting inability of WESTERN to grant the licenses or immunities purported to be granted by it under patents for such inventions shall not be considered to be a breach of this agreement, if:

(i) Such contract is for the benefit of such government's military or national defense establishment or the Energy Research and Development Administration of the United States Government or the National Aeronautics and Space Administration of the United States Government, or

(ii) In cases other than (i), such contract is with the United States Government or any agency of and within such Government, and any such requirement or restraint is pursuant to a statute or officially promulgated regulation of such Government or agency applicable to such contract;

provided, however, that

(iii) WESTERN (or, if an ASSOCIATED COMPANY thereof has entered into such contract, such ASSOCIATED COMPANY) shall exert its best efforts to enable WESTERN to grant the licenses or immunities herein purported to be granted by it under such patents; and

(iv) Within ninety (90) days after the filing of any application for any such patent, WESTERN shall give written notice to the other party identifying such application by country, number and date of filing.

For the purposes of this section 2.06, AT&T, WESTERN and their ASSOCIATED COMPANIES shall all be deemed to be ASSOCIATED COMPANIES of one another.

ARTICLE III—ROYALTY

3.01 The CORPORATION shall pay to WESTERN royalty, at the applicable rate hereinafter specified, on each LICENSED PRODUCT, and maintenance part therefor, which is a ROYALTY-BEARING PRODUCT, and

(i) Which is sold, leased or put into use by the CORPORATION or any of its SUBSIDIARIES while any license acquired hereunder by the CORPORATION with respect to such ROYALTY-BEARING PRODUCT shall remain in force, or

(ii) Which is made by or for the CORPORATION or any of its SUBSIDIARIES while any such license shall remain in force and is thereafter sold, leased or put into use by the CORPORATION or any of its SUBSIDIARIES,

whether or not such SUBSIDIARIES are sublicensed pursuant to section 2.05, such royalty rate to be applied, except as provided in section 3.05, to the NET SELLING PRICE of such ROYALTY-BEARING PRODUCT if sold for a separate consideration payable wholly in money and in all other cases to the FAIR MARKET VALUE thereof. The royalty rates applicable to LICENSED PRODUCTS of the kinds specified in section 2.01, and maintenance parts therefor, are as follows:

(iii) _____

_____

3.02 If a LICENSED PRODUCT is a ROYALTY-BEARING PRODUCT solely on account of one or a limited number of WESTERN'S PATENTS, the CORPORATION may elect to reduce the amount of royalty otherwise payable hereunder on said LICENSED PRODUCT by a royalty reduction percentage, and as of an effective date, established by WESTERN. Upon written request from the CORPORATION identifying the LICENSED PRODUCT and each relevant patent, WESTERN will inform the CORPORATION of the royalty reduction percentage applicable in respect of said LICENSED PRODUCT and patent or patents and the effective date thereof.

3.03 A LICENSED PRODUCT, or maintenance part therefor, which is made and sold by the CORPORATION or any of its SUBSIDIARIES and which is a ROYALTY-BEARING PRODUCT hereunder on account of one or more of WESTERN'S PATENTS, may be treated by the CORPORATION as not licensed and not subject to royalty hereunder if all of the following conditions are met:

(i) The purchaser is licensed under the same patent or patents, pursuant to another agreement, to have said LICENSED PRODUCT or part made;

(ii) The purchaser expressly advises the CORPORATION or its SUBSIDIARY, whichever effects the making and sale, in writing at or prior to (but in no event later than) the time of such sale that, in purchasing said LICENSED PRODUCT or part, it is exercising its own license or licenses under said patent or patents to have said LICENSED PRODUCT or part made; and

(iii) The CORPORATION retains such written advice and makes it available to WESTERN at the latter's request.

3.04 Only one royalty shall be payable hereunder in respect of any ROYALTY-BEARING PRODUCT. Royalty shall accrue hereunder on any LICENSED PRODUCT, or maintenance part therefor, upon its first becoming a ROYALTY-BEARING PRODUCT, and the royalty thereon shall become payable in accordance with the provisions of this Article III upon the first sale, lease or putting into use thereof.

3.05 If any sale of a ROYALTY-BEARING PRODUCT shall be made by the CORPORATION on a SUBSIDIARY thereof to:

(i) Any company of which the CORPORATION is a SUBSIDIARY at the time of such sale, or

(ii) The CORPORATION or a SUBSIDIARY thereof or any other SUBSIDIARY of a company of which the CORPORATION is a SUBSIDIARY at the time of such sale.

royalty payable hereunder shall be computed on the FAIR MARKET VALUE of such ROYALTY-BEARING PRODUCT,

ARTICLE IV—REPORTS AND PAYMENTS

4.01 The CORPORATION shall keep full, clear and accurate records with respect to ROYALTY-BEARING PRODUCTS. WESTERN shall have the right through its accredited auditing representatives to make an examination and audit, during normal business hours, not more frequently than annually, of all such records and such other records and accounts as may under recognized accounting practices contain information bearing upon the amount of royalty payable to it under this agreement. Prompt adjustment shall be made by the proper party to compensate for any errors or omissions disclosed by such examination or audit. Neither such right to examine and audit nor the right to receive such adjustment shall be affected by any statement to the contrary, appearing on checks or otherwise, unless such statement appears in a letter, signed by the party having such right and delivered to the other party, expressly waiving such right.[1]

4.02 (a) Within sixty (60) days after the end of each semiannual period ending on June 30th or December 31st, commencing with the semiannial period during which this agreement first becomes effective, the CORPORATION shall furnish to WESTERN a statement, in form acceptable to WESTERN, certified by a responsible official of the CORPORATION:

(i) Showing all ROYALTY-BEARING PRODUCTS, by kinds of LICENSED PRODUCTS, which were sold, leased or put into use during such semiannual period, the NET SELLING PRICES of such ROYALTY-BEARING PRODUCTS or (where royalty is based on FAIR MARKET VALUES) the FAIR MARKET VALUES thereof and the amount of royalty payable thereon (or if no such ROYALTY-BEARING PRODUCT has been so sold, leased or put into use, showing that fact);

(ii) Identifying, if royalty is reduced under provisions of section 3.02, each LICENSED PRODUCT by its type and the patent or patents involved in such royalty reduction;

[1] If licensee insists on a non-Western auditor, third line, insert, after ''representatives'', -or, at the election of the CORPORATION, through a firm of certified public accountants proposed by WESTERN and accepted by the CORPORATION-.

(iii) Showing, by purchasers and kinds of LICENSED PRODUCTS, the monetary totals of the sales, to each purchaser exercising its own ''to have made'' license or licenses, of LICENSED PRODUCTS and maintenance parts in transactions of the character described in section 3.03; and

(iv) Identifying all transactions of the character described in section 3.05.

(b) Within such sixty (60) days the CORPORATION shall, irrespective of its own business and accounting methods, pay to WESTERN the royalties payable for such semiannual period.

(c) Notwithstanding the provisions of section 6.03(a)(v), the CORPORATION shall furnish whatever additional information WESTERN may reasonably prescribe from time to time to enable WESTERN to ascertain which LICENSED PRODUCTS (and maintenance parts therefor) sold, leased or put into use by the CORPORATION or any of its SUBSIDIARIES are subject to the payment of royalty to WESTERN, and the amount of royalty payable thereon.

4.03 Royalty payments provided for in this agreement shall, when overdue, bear interest at an annual rate of one percent (1%) over the prime rate or successive prime rates in effect in New York City during delinquency.

4.04 Payment to WESTERN shall be made in United States dollars to WESTERN'S Treasury Organization at 222 Broadway, New York, New York 10038, or at such changed address as WESTERN shall have specified by written notice. If any royalty for any semiannual period referred to in section 4.02 is computed in other currency, conversion to United States dollars shall be at the prevailing rate for bank cable transfers on New York City as quoted for the last day of such semiannual period by leading banks dealing in the New York City foreign exchange market.

ARTICLE V—TERMINATION, CANCELLATION AND SURRENDER

5.01 (a) If the CORPORATION shall fail to fulfill one or more of its obligations under ARTICLES III or IV, WESTERN may, upon election and in addition to any other remedies that it may have, at any time terminate all licenses and rights granted to the CORPORATION hereunder, by not less than six (6) months' written notice to the CORPORATION specifying any such breach, unless within the period of such notice all breaches specified therein shall have been remedied.

(b) Termination by WESTERN of licenses and rights granted to the CORPORATION shall terminate the obligations of the CORPORATION under the provisions of Articles III and IV relating to such terminated licenses and rights, except such obligations as to ROYALTY-BEARING PRODUCTS made, sold, leased or put into use prior to such termination.

5.02 By written notice to WESTERN, the CORPORATION may cancel the licenses for any specified products granted hereunder to it under WESTERN'S PATENTS. Such cancellation shall be effective as of the date of giving said notice but shall not relieve the CORPORATION of its obligation to pay accrued royalties with respect to such specified products.

5.03 By written notice to WESTERN, specifying any of WESTERN'S PATENTS by number and date of issuance, the CORPORATION may surrender and terminate all licenses and rights granted to it under such specified patent or patents or under any specified invention or inventions thereof. Such surrender and termination shall be effective as of a date specified in said notice which shall not be more than six (6) months prior to the date of giving said notice. As of said effective date, such specified patent or patents or invention or inventions shall cease to be among, or among the inventions of, WESTERN'S PATENTS for the purposes of this agreement without affecting obligations in respect of royalties accrued prior to said effective date.

5.04 (a) Every sublicense granted by the CORPORATION shall terminate with termination or cancellation of its corresponding license.

(b) Any sublicenses granted shall terminate if and when the grantee thereof ceases to be a SUBSIDIARY of the CORPORATION. Each LICENSED PRODUCT and each maintenance part, made by or for a SUBSIDIARY of the CORPORATION, and on which royalty has accrued but which remains not sold, leased or put into use at the time such SUBSIDIARY ceases to be a SUBSIDIARY of the CORPORATION, shall be deemed to have been put into use by such SUBSIDIARY immediately prior to such time at the place said LICENSED PRODUCT or part is then located.

5.05 Licenses, immunities and rights with respect to each LICENSED PRODUCT, and each maintenance part, made, sold, leased or put into use prior to any termination or cancellation under the provisions of this Article V shall survive such termination or cancellation.

ARTICLE VI—MISCELLANEOUS PROVISIONS

6.01 (a) WESTERN shall, upon written request from the CORPORATION sufficiently identifying any patent by country, number and date of issuance, inform the CORPORATION as to the extent to which any such patent is subject to the licenses, immunities and rights granted to the CORPORATION.

(b) If such licenses, immunities or rights under any such patent are restricted in scope, copies of all pertinent provisions of

any contract (other than provisions of a contract with a government to the extent that disclosure thereof is prohibited under the government's laws or regulations) creating such restrictions shall, upon request, be furnished to the CORPORATION.

6.02 Upon written request from the CORPORATION, WESTERN shall inform the CORPORATION which of WESTERN'S PATENTS cover inventions under which the United States Government holds a royalty-free license.

6.03 (a) Nothing contained in this agreement shall be construed as:

(i) Requiring the filing of any patent application, the securing of any patent or the maintaining of any patent in force; or

(ii) A warranty or representation by WESTERN as to the validity or scope of any patent; or

(iii) A warranty or representation that any manufacture, sale, lease, use or importation will be free from infringement of patents other than those under which and to the extent to which licenses or immunities are in force hereunder; or

(iv) An agreement to bring or prosecute actions or suits against third parties for infringement; or

(v) An obligation to furnish any manufacturing or technical information or assistance; or

(vi) Conferring any right to use, in advertising, publicity or otherwise, any name, trade name or trademark, or any contraction, abbreviation or simulation thereof; or

(vii) Conferring by implication, estoppel or otherwise upon the CORPORATION any license or other right under any patent, except the licenses and rights expressly granted to the CORPORATION; or

(viii) An obligation upon WESTERN to make any determination as to the applicability of any patent to any product of the CORPORATION or any of its SUBSIDIARIES; or

(ix) A release for any infringement prior to the effective date hereof.

(b) Neither WESTERN nor AT&T makes any representations, extends any warranties of any kind or assumes any responsibility whatever with respect to the manufacture, sale, lease, use or importation of any LICENSED PRODUCT, or part therefor, by the CORPORATION, any of its SUBSIDIARIES, or any direct or indirect supplier or vendee or other transferee of any such company, other than the licenses, immunities and rights expressly herein granted.

6.04 Neither this agreement nor any licenses or rights hereunder, in whole or in part, shall been assignable or otherwise transferable.

6.05 Any notice, request or information shall be deemed to be sufficiently given when sent by registered mail addressed to the addressee at its office above specified (and when addressed to WESTERN to the attention of its Patent Licensing Organization) and any royalty statement shall be deemed to be sufficiently furnished when sent by registered mail addressed to WESTERN'S Treasury Organization at 222 Broadway, New York, New York 10038, or at such changed address as the addressee shall have specified by written notice.

6.06 This agreement sets forth the entire agreement and understanding between the parties as to the subject matter hereof and merges all prior discussions between them, and neither of the parties shall be bound by any conditions, definitions, warranties, understandings or representations with respect to such subject matter other than as expressly provided herein, or in any prior existing written agreement between the parties, or as duly set forth on or subsequent to the effective date hereof in writing and signed by a proper and duly authorized representative of the party to be bound thereby.

6.07 The construction and performance of this agreement shall be governed by the law of the State of New York.

IN WITNESS WHEREOF, each of the parties has caused this agreement to be executed in duplicate originals by its duly authorized representatives on the respective dates entered below.

WESTERN ELECTRIC COMPANY, INCORPORATED

By _____

Director of Patent Licensing

_____

Date

[SEAL]

Attest:

_____

Secretary

By _____

Title _____

_____

Date

[SEAL]

Attest:

_____

Secretary

GENERAL DEFINITIONS APPENDIX

FAIR MARKET VALUE means the NET SELLING PRICE which the CORPORATION or any of its SUBSIDIARIES, whichever effects the sale, lease or use of the product or maintenance part, would realize from an unaffiliated buyer in an arm's length sale of an identical product or maintenance part in the same quantity and at the same time and place as such sale, lease or use.

FIVE YEAR PERIOD means the period commencing on the effective date of this agreement and having a duration of five years.

LICENSED PRODUCT means:

(i) Any product as such, or

(ii) Any product which is any specified combination, of the kinds listed in section 2.01 of this agreement. Although the term does not mean, and although licenses are not granted for any other combination, a LICENSED PRODUCT

(iii) Shall not lose its status as such on account of, and

(iv) Shall not cause an unlicensed combination to infringe WESTERN'S PATENTS solely on account of, such LICENSED PRODUCT being made, sold, leased or put into use as part of an unlicensed combination.

NET SELLING PRICE means the gross selling price of the ROYALTY-BEARING PRODUCT in the form in which it is sold, whether or not assembled (and without excluding therefrom any components or subassemblies thereof, whatever their origin and whether or not patent impacted), less the following items but only insofar as they pertain to the sale of such ROYALTY-BEARING PRODUCT by the CORPORATION or any of its SUBSIDIARIES and are included in such gross selling price:

(i) Usual trade discounts actually allowed (other than cash discounts, advertising allowances, or fees or commissions to any employees of the CORPORATION, a SUBSIDIARY of the CORPORATION, a company of which the CORPORATION is a SUBSIDIARY at the time of the sale, or any other SUBSIDIARY of a company of which the CORPORATION is a SUBSIDIARY at the time of such sale);

(ii) Packing costs;

(iii) Import, export, excise and sales taxes, and customs duties;

(iv) Costs of insurance and transportation from the place of manufacture to the customer's premises or point of installation;

(v) Costs of installation at the place of use; and

(vi) Costs of special engineering services not incident to the design or manufacture of the ROYALTY-BEARING PRODUCT.

ROYALTY-BEARING PRODUCT means any LICENSED PRODUCT, and any maintenance part therefor,

(i) Which upon manufacture includes, or the manufacture of which employs, any invention of any of WESTERN'S PATENTS in force at the time and place of such manufacture, or

(ii) Which includes when sold, leased or put into use, or the use of which employs, any invention of any of WESTERN'S PATENTS in force at the time and place of such sale, lease or use,

other than

(iii) Inventions under which the United States Government holds a royalty-free license if such LICENSED PRODUCT or part is contracted for, directly or indirectly, by the United States Government, or by another national government with funds derived through the Military Assistance Program or otherwise through the United States Government, and

(iv) Inventions employed in the manufacture of, or included in, such LICENSED PRODUCT or any original part thereof, or such maintenance part therefor or any original part thereof, by a direct or indirect supplier of the CORPORATION or any of its SUBSIDIARIES, but only to the extent such supplier has exercised its own licenses granted by WESTERN under patents for such inventions to so employ or include said inventions.

SUBSIDIARY means a company the majority of whose stock entitled to vote for election of directors is now or hereafter controlled by the parent company either directly or indirectly, but any such company shall be deemed to be a SUBSIDIARY only so long as such control exists.

WESTERN'S PATENTS means all patents issued at any time in the United States for:

(i) Inventions made prior to the termination of the FIVE YEAR PERIOD and owned or controlled at any time during the FIVE YEAR PERIOD by AT&T, WESTERN or any of their SUBSIDIARIES,

(ii) Inventions made during the FIVE YEAR PERIOD, solely or jointly with anyone, and in the course of their employment by employees of any such company who are employed to do research, development or other inventive work, and

(iii) Any other inventions made prior to the termination of the FIVE YEAR PERIOD, with respect to which and to the extent to which any such company shall at any time during the FIVE YEAR PERIOD have the right to grant the licenses and rights which are herein granted by WESTERN:

provided, however, that said patents do not include those issued for inventions made by employees of any SUBSIDIARY of WESTERN or AT&T exclusively engaged in the performance of contracts with the Energy Research and Development Administration of the United States.

TECHNICAL DEFINITIONS APPENDIX

BILATERAL PATENT LICENSE AGREEMENT

Effective as of ——— WESTERN ELECTRIC COMPANY, INCORPORATED, a New York corporation (''WESTERN''), having an office at 222 Broadway, New York, New York

10038, and ———————— (''the CORPORATION'') having an office at ———————— agree as follows:

ARTICLE I—DEFINITIONS

1.01 Terms in this agreement (other than technical terms, names of parties, companies and Article headings) which are in capital letters shall have the meanings specified in the General Definitions Appendix, and technical terms in this agreement which are in capital letters shall have the meanings specified in the Technical Definitions Appendix.

ARTICLE II—GRANTS OF LICENSES AND IMMUNITIES

2.01 WESTERN grants to the CORPORATION under WESTERN'S PATENTS nonexclusive licenses for products of the following kinds:

2.02 The CORPORATION grants to WESTERN and to AMERICAN TELEPHONE AND TELEGRAPH COMPANY, a New York corporation (''AT&T''), severally, under the CORPORATION'S PATENTS nonexclusive royalty-free licenses for products of the following kinds:

———————————————————————

———————————————————————

———————————————————————

2.03 All licenses herein granted shall commence on the effective date hereof and, except as provided in Article VI and notwithstanding the expiration of the FIVE YEAR PERIOD, shall continue for the entire terms that the patents under which they are granted are in force or for that part of such terms for which the grantor has the right to grant such licenses.

2.04 (a) WESTERN grants under all patents issued in countries other than the United States and owned or controlled by AT&T, WESTERN or their SUBSIDIARIES, royalty-free immunity relating to the sale, lease or use in, or the importation into, such other countries of LICENSED PRODUCTS, and maintenance parts therefor, manufactured under the licenses granted under WESTERN'S PATENTS; provided, however, that nothing in this section 2.04(a) shall relieve the CORPORATION of its obligation to pay any royalty which may be predicated upon such manufacture of any such LICENSED PRODUCT or part, whether or not the first sale, lease or use thereof occurs outside of the United States.

(b) The CORPORATION grants under all patents issued in countries other than the United States and owned or controlled by it or its ASSOCIATED COMPANIES, royalty-free immunity relating to the sale, lease or use in, or the importation into, such other countries of LICENSED PRODUCTS, and maintenance parts therefor, manufactured under the licenses granted under the CORPORATION'S PATENTS.

2.05 The licenses granted for LICENSED PRODUCTS are licenses to make, have made, use, lease and sell such LICENSED PRODUCTS. Such licenses include the rights to maintain LICENSED PRODUCTS, to practice methods and processes involved in the use of LICENSED PRODUCTS and to make and have made, to use and have used, and to maintain machines, tools, materials and other instrumentalities, and to use and have used methods and processes, insofar as much machines, tools, materials, other instrumentalities, methods and processes are involved in or incidental to the development, manufacture, installation, testing or repair of LICENSED PRODUCTS.

2.06 The grant of each license to the CORPORATION includes the right to grant sublicenses within the scope of such license to its SUBSIDIARIES. The grant of each license to WESTERN or AT&T includes the right to grant sublicenses within the scope of such license to its ASSOCIATED COMPANIES. Such right of either party or AT&T may be exercised at any time prior to termination or cancellation of the corresponding license under the provisions of Article VI. Any such sublicenses granted to any present SUBSIDIARY or any present ASSOCIATED COMPANY may be made effective, retroactively, as of the effective date hereof, and any such sublicenses granted to any future SUBSIDIARY or any future ASSOCIATED COMPANY may be made effective, retroactively, as of the date such company became a SUBSIDIARY or an ASSOCIATED COMPANY.

ARTICLE III—ACQUISITION AND WARRANTY

3.01 WESTERN and the CORPORATION shall each acquire rights to inventions made during the FIVE YEAR PERIOD which relate to the subject matter of licenses granted and are made, in the course of their employment, either solely or jointly with anyone, by its or its ASSOCIATED COMPANIES' employees (and in the case of WESTERN'S obligation, by employees of AT&T or its SUBSIDIARIES) who are employed to do research, development or other inventive work, such that each grantee shall by virtue of this agreement, receive in respect of patents issued for such inventions, licenses and rights of the scope and upon the terms herein provided to be granted to such grantee.

3.02 WESTERN and, except as may be stated in a letter from the CORPORATION to WESTERN referring to this agreement and delivered before or concurrently with the execution hereof by WESTERN, the CORPORATION each warrants that there are no commitments or restrictions which will limit the licenses and rights granted by it under patents issued at any time for inventions owned at any time during the FIVE

YEAR PERIOD by it or any of its ASSOCIATED COMPANIES (and in the case of WESTERN'S warranty, by AT&T or any of its SUBSIDIARIES).

3.03 It is recognized that either party or any of its ASSOCIATED COMPANIES may have entered into or may hereafter enter into a contract with a national government to do development work financed by such government and may be required under such contract (either unconditionally or by reason of any action or inaction thereunder) to assign to such government its rights to grant, or may now or hereafter be restrained by such government from granting, licenses or immunities to others than its ASSOCIATED COMPANIES under patents for inventions arising out of such work or covered by such contract. The resulting inability of such party to grant the licenses or immunities purported to be granted by it under patents for such inventions shall not be considered to be a breach of this agreement, if:

(i) Such contract is for the benefit of such government's military or national defense establishment or the Energy Research and Development Administration of the United States Government or the National Aeronautics and Space Administration of the United States Government, or

(ii) In cases other than (i), such contract is with the United States Government or any agency of and within such Government, and any such requirement or restraint is pursuant to a statute or officially promulgated regulation of such Government or agency applicable to such contract;

provided, however, that:

(iii) Such party (or, if an ASSOCIATED COMPANY thereof has entered into such contract, such ASSOCIATED COMPANY) shall exert its best efforts to enable such party to grant the licenses or immunities herein purported to be granted by it under such patents; and

(iv) Within ninety (90) days after the filing of any application for any such patent, such party shall give written notice to the other party identifying such application by country, number and date of filing.

For the purposes of this section 3.03, AT&T, WESTERN and their ASSOCIATED COMPANIES shall all be deemed to be ASSOCIATED COMPANIES of one another, and the CORPORATION and its ASSOCIATED COMPANIES shall be deemed to be ASSOCIATED COMPANIES of one another.

ARTICLE IV—ROYALTY

4.01 The CORPORATION shall pay to WESTERN royalty, at the applicable rate hereinafter specified, on each LICENSED PRODUCT, and maintenance part therefor, which is a ROYALTY-BEARING PRODUCT, and

(i) Which is sold, leased or put into use by the CORPORATION or any of its SUBSIDIARIES while any license acquired hereunder by the CORPORATION with respect to such ROYALTY-BEARING PRODUCT shall remain in force, or

(ii) Which is made by or for the CORPORATION or any of its SUBSIDIARIES while any such license shall remain in force and is thereafter sold, leased or put into use by the CORPORATION or any of its SUBSIDIARIES,

whether or not such SUBSIDIARIES are sublicensed pursuant to section 2.06, such royalty rate to be applied, except as provided in section 4.05, to the NET SELLING PRICE of such ROYALTY-BEARING PRODUCT if sold for a separate consideration payable wholly in money and in all other cases to the FAIR MARKET VALUE thereof. The royalty rates applicable to LICENSED PRODUCTS of the kinds specified in section 2.01, and maintenance parts therefor, are as follows:

(iii) _____

_____

4.02 If a LICENSED PRODUCT is a ROYALTY-BEARING PRODUCT solely on account of one or a limited number of WESTERN'S PATENTS, the CORPORATION may elect to reduce the amount of royalty otherwise payable hereunder on said LICENSED PRODUCT by a royalty reduction percentage, and as of an effective date, established by WESTERN. Upon written request from the CORPORATION identifying the LICENSED PRODUCT and each relevant patent, WESTERN will inform the CORPORATION of the royalty reduction percentage applicable in respect of said LICENSED PRODUCT and patent or patents and the effective date thereof.

4.03 A LICENSED PRODUCT, or maintenance part therefor, which is made and sold by the CORPORATION or any of its SUBSIDIARIES and which is a ROYALTY-BEARING PRODUCT hereunder on account of one or more of WESTERN'S PATENTS, may be treated by the CORPORATION as not licensed and not subject to royalty hereunder if all of the following conditions are met:

(i) The purchaser is licensed under the same patent or patents, pursuant to another agreement, to have said LICENSED PRODUCT or part made;

(ii) The purchaser expressly advises the CORPORATION or its SUBSIDIARY, whichever effects the making and sale, in writing at or prior to (but in no event later than) the time of such sale that, in purchasing said LICENSED PRODUCT or part, it is exercising its own license or licenses under said patent or patents to have said LICENSED PRODUCT or part made; and

(iii) The CORPORATION retains such written advice and makes it available to WESTERN at the latter's request.

4.04 Only one royalty shall be payable hereunder in respect of any ROYALTY-BEARING PRODUCT. Royalty shall accrue hereunder on any LICENSED PRODUCT, or maintenance part therefor, upon its first becoming a ROYALTY-BEARING PRODUCT, and the royalty thereon shall become payable in accordance with the provisions of this Article IV upon the first sale, lease or putting into use thereof.

4.05 If any sale of a ROYALTY-BEARING PRODUCT shall be made by the CORPORATION or a SUBSIDIARY thereof to:

(i) Any company of which the CORPORATION is a SUBSIDIARY at the time of such sale, or

(ii) The CORPORATION or a SUBSIDIARY thereof or any other SUBSIDIARY of a company of which the CORPORATION is a SUBSIDIARY at the time of such sale,

royalty payable hereunder shall be computed on the FAIR MARKET VALUE of such ROYALTY-BEARING PRODUCT.

ARTICLE V—REPORTS AND PAYMENTS

5.01 The CORPORATION shall keep full, clear and accurate records with respect to ROYALTY-BEARING PRODUCTs. WESTERN shall have the right through its accredited auditing representatives to make an examination and audit, during normal business hours, not more frequently than annually, of all such records and such other records and accounts as may under recognized accounting practices contain information bearing upon the amount of royalty payable to it under this agreement. Prompt adjustment shall be made by the proper party to compensate for any errors or omissions disclosed by such examination or audit. Neither such right to examine and audit nor the right to receive such adjustments shall be affected by any statement to the contrary, appearing on checks or otherwise, unless such statement appears in a letter, signed by the party having such right and delivered to the other party, expressly waiving such right.[1]

5.02 (a) Within sixty (60) days after the end of each semiannual period ending on June 30th or December 31st, commencing with the semiannual period during which this agreement first becomes effective, the CORPORATION shall furnish to WESTERN a statement, in form acceptable to WESTERN; certified by a responsible official of the CORPORATION:

(i) Showing all ROYALTY-BEARING PRODUCTS, by kinds of LICENSED PRODUCTS, which were sold, leased or put into use during such semiannual period, the NET SELLING PRICES of such ROYALTY-BEARING PRODUCTS or (where royalty is based on FAIR MARKET VALUES) the FAIR MARKET VALUES thereof and the amount of royalty payable thereon (or if no such ROYALTY-BEARING PRODUCT has been so sold, leased or put into use, showing that fact);

(ii) Identifying, if royalty is reduced under provisions of section 4.02, each LICENSED PRODUCT by its type and the patent or patents involved in such royalty reduction;

(iii) Showing, by purchasers and kinds of LICENSED PRODUCTS, the monetary totals of the sales, to each purchaser exercising its own ''to have made'' license or licenses, of LICENSED PRODUCTS and maintenance parts in transactions of the character described in section 4.03; and

(iv) Identifying all transactions of the character described in section 4.05.

(b) Within such sixty (60) days the CORPORATION shall, irrespective of its own business and accounting methods, pay to WESTERN the royalties payable for such semiannual period.

(c) Notwithstanding the provisions of section 7.04(a)(v), the CORPORATION shall furnish whatever additional information WESTERN may reasonably prescribe from time to time to enable WESTERN to ascertain which LICENSED PRODUCTS (and maintenance parts therefor) sold, leased or put into use by the CORPORATION or any of its SUBSIDIARIES are subject to the payment of royalty to WESTERN, and the amount of royalty payable thereon.

5.03 Royalty payments provided for in this agreement shall, when overdue, bear interest at an annual rate of one percent (1%) over the prime rate or successive prime rates in effect in New York City during delinquency.

5.04 Payment to WESTERN shall be made in United States dollars to WESTERN'S Treasury Organization at 222 Broadway, New York, New York 10038, or at such changed address as WESTERN shall have specified by written notice. If any royalty for any semiannual period referred to in section 5.02 is computed in other currency, conversion to United States dollars shall be at the prevailing rate for bank cable transfers on New York City as quoted for the last day of such semiannual period by leading banks dealing in the New York City foreign exchange market.

[1] If licensee insists on a non-Western auditor, third line, insert, after ''representatives'', -or, at the election of the CORPORATION, through a firm of certified public accountants proposed by WESTERN and accepted by the CORPORATION-.

ARTICLE VI—TERMINATION, CANCELLATION AND SURRENDER

6.01 Any termination under the provisions of this Article VI by one party of licenses and rights of the other party shall not affect the licenses and rights of the terminating party and its sublicensees (or of AT&T and its sublicensees if WESTERN is the terminating party), nor the obligations of the CORPORATION under the provisions of Articles IV and V if it is the terminating party.

6.02 If WESTERN shall fail to fulfill one or more of its obligations under this agreement, the CORPORATION may, upon election and in addition to any other remedies that it may have, at any time terminate all licenses and rights granted to WESTERN and AT&T hereunder, by not less than six (6) months' written notice to WESTERN specifying any such breach, unless within the period of such notice all breaches specified therein shall have been remedied.

6.03 (a) If the CORPORATION shall fail to fulfill one or more of:

(i) Its obligations under Articles IV or V, or

(ii) Its obligations under this agreement whereby WESTERN or AT&T fails to receive licenses or rights which it is entitled hereunder to receive under patents issued in the United States,

WESTERN may, upon the election and in addition to any other remedies that it may have, at any time terminate all licenses and rights granted to the CORPORATION hereunder, by not less than six (6) months' written notice to the CORPORATION specifying any such breach, unless within the period of such notice all breaches specified therein shall have been remedied.

(b) Termination by WESTERN of licenses and rights granted to the CORPORATION shall terminate the obligations of the CORPORATION under the provisions of Articles IV and V relating to such terminated licenses and rights, except such obligations as to ROYALTY-BEARING PRODUCTS made, sold, leased or put into use prior to such termination.

6.04 (a) By written notice to WESTERN, the CORPORATION may cancel the licenses for any specified products granted hereunder to it under WESTERN'S PATENTS. Such cancellation shall be effective as of the date of giving said notice but shall not relieve the CORPORATION of its obligation to pay accrued royalties with respect to such specified products.

(b) By written notice to the CORPORATION, WESTERN or AT&T may cancel the licenses for any specified products granted hereunder to it under the CORPORATION'S PATENTS, such cancellation to be effective as of the date of giving said notice.

6.05 By written notice to WESTERN, specifying any of WESTERN'S PATENTS by number and date of issuance, the CORPORATION may surrender and terminate all licenses and rights granted to it under such specified patent or patents or under any specified invention or inventions thereof. Such surrender and termination shall be effective as of a date specified in said notice which shall not be more than six (6) months prior to the date of giving said notice. As of said effective date, such specified patent or patents or invention or inventions shall cease to be among, or among the inventions of, WESTERN'S PATENTS for the purposes of this agreement without affecting obligations in respect of royalties accrued prior to said effective date.

6.06 (a) Every sublicense granted by a party or AT&T shall terminate with termination or cancellation of its corresponding license.

(b) Any sublicenses granted shall terminate if and when the grantee thereof ceases to be an ASSOCIATED COMPANY of WESTERN or AT&T or a SUBSIDIARY of the CORPORATION. Each LICENSED PRODUCT and each maintenance part, made by or for a SUBSIDIARY of the CORPORATION, and on which royalty has accrued but which remains not sold, leased or put into use at the time such SUBSIDIARY ceases to be a SUBSIDIARY of the CORPORATION, shall be deemed to have been put into use by such SUBSIDIARY immediately prior to such time at the place said LICENSED PRODUCT or part is then located.

(c) If an ASSOCIATED COMPANY'S relationship to a party or AT&T changes so that such ASSOCIATED COMPANY is no longer an ASSOCIATED COMPANY of such party or AT&T, licenses and rights acquired under the patents and patent rights of such ASSOCIATED COMPANY for inventions made prior to the date such relationship changed shall not be affected by such change.

6.07 Licenses, immunities and rights with respect to each LICENSED PRODUCT, and each maintenance part, made, sold, leased or put into use prior to any termination or cancellation under the provisions of this Article VI shall survive such termination or cancellation.

ARTICLE VII—MISCELLANEOUS PROVISIONS

7.01 With respect to patents or inventions owned jointly by the CORPORATION, or any of its ASSOCIATED COMPANIES, with any other person or persons who has or have granted, or who shall hereafter grant, to WESTERN or AT&T, licenses or other rights thereunder, the CORPORATION, to the extent that the licenses and rights so granted do not exceed the scope of the licenses and rights herein granted by the CORPORATION, consents to the grant of licenses and rights to WESTERN and AT&T under such patents and inventions by such other person or persons.

7.02 (a) Each party shall, upon written request from the other party sufficiently identifying any patent by country, number and date of issuance, inform the other party as to the extent to which any such patent is subject to the licenses, immunities and rights granted to such other party.

(b) If such licenses, immunities or rights under any such patent are restricted in scope, copies of all pertinent provisions of any contract (other than provisions of a contract with a government to the extent that disclosure thereof is prohibited under that government's laws or regulations) creating such restrictions shall, upon request, be furnished to the party making such request.

7.03 Upon written request from one party, the other party shall inform the requesting party which of said other party's patents cover inventions under which the United States Government holds a royalty-free license.

7.04 (a) Nothing contained in this agreement shall be construed as:

(i) Requiring the filing of any patent application, the securing of any patent or the maintaining of any patent in force; or

(ii) A warranty or representation by any grantor as to the validity or scope of any patent; or

(iii) A warranty or representation that any manufacture, sale, lease, use or importation will be free from infringement of patents other than those under which and to the extent to which licenses or immunities are in force hereunder; or

(iv) An agreement to bring or prosecute actions or suits against third parties for infringement; or

(v) An obligation to furnish any manufacturing or technical information or assistance; or

(vi) Conferring any right to use, in advertising, publicity or otherwise, any name, trade name or trademark, or any contraction, abbreviation or simulation thereof; or

(vii) Conferring by implication, estoppel or otherwise upon any grantee any license or other right under any patent, except the licenses and rights expressly granted to such grantee; or

(viii) An obligation upon any grantor to make any determination as to the applicability of any patent to any product of any grantee or any of its ASSOCIATED COMPANIES; or

(ix) A release for any infringement prior to the effective date hereof.

(b) Neither party nor AT&T makes any representations, extends any warranties of any kind or assumes any responsibility whatever with respect to the manufacture, sale, lease, use or importation of any LICENSED PRODUCT, or part therefor, by any grantee, any of its ASSOCIATED COMPANIES, or any direct or indirect supplier or vendee or other transferee of any such company, other than the licenses, immunities, rights and warranties expressly herein granted.

7.05 Neither this agreement nor any licenses or rights hereunder, in whole or in part, shall be assignable or otherwise transferable.

7.06 Any notice, request or information shall be deemed to be sufficently given when sent by registered mail addressed to the addressee at its office above specified (and when addressed to WESTERN, to the attention of its Patent Licensing Organization) and any royalty statement shall be deemed to be sufficiently furnished when sent by registered mail addressed to WESTERN'S Treasury Organization at 222 Broadway, New York, New York 10038, or at such changed address as the addressee shall have specified by written notice.

7.07 This agreement sets forth the entire agreement and understanding between the parties as to the subject matter hereof and merges all prior discussions between them and neither of the parties shall be bound by any conditions, definitions, warranties, understandings or representations with respect to such subject matter other than as expressly provided herein, or in any prior existing written agreement between the parties, or as duly set forth on or subsequent to the effective date hereof in writing and signed by a proper and duly authorized representative of the party to be bound thereby.

7.08 The construction and performance of this agreement shall be governed by the law of the State of New York.

IN WITNESS WHEREOF, each of the parties has caused this agreement to be executed in duplicate originals by its duly authorized representatives on the respective dates entered below.

WESTERN ELECTRIC COMPANY, INCORPORATED

By _____

Director of Patent Licensing

_____

Date

[SEAL]

Attest:

_____

Secretary

By _____

Title _____

_____

Date

[SEAL]

Attest:

_____

Secretary

GENERAL DEFINITIONS APPENDIX

ASSOCIATED COMPANIES of AT&T are The Southern New England Telephone Company, a Connecticut corporation, and its SUBSIDIARIES, Cincinnati Bell Inc., an

Ohio corporation, and its SUBSIDIARIES, and SUBSIDIARIES of AT&T other than WESTERN and its SUBSIDIARIES.

ASSOCIATED COMPANIES of the CORPORATION are SUBSIDIARIES of the CORPORATION, companies presently having the CORPORATION as a SUBSIDIARY and other SUBSIDIARIES of such companies.

ASSOCIATED COMPANIES of WESTERN are SUBSIDIARIES of WESTERN.

The CORPORATION'S PATENTS means all patents issued at any time in the United States for:

(i) Inventions made prior to the termination of the FIVE YEAR PERIOD and owned or controlled at any time during the FIVE YEAR PERIOD by the CORPORATION or any of its ASSOCIATED COMPANIES,

(ii) Inventions made during the FIVE YEAR PERIOD, solely or jointly with anyone, and in the course of their employment by employees of any such company who are employed to do research, development or other inventive work, and

(iii) Any other inventions made prior to the termination of the FIVE YEAR PERIOD, with respect to which and to the extent to which any such company shall at any time during the FIVE YEAR PERIOD have the right to grant the licenses and rights which are herein granted by the CORPORATION.

FAIR MARKET VALUE means the NET SELLING PRICE which the CORPORATION or any of its SUBSIDIARIES, whichever effects the sale, lease or use of the product or maintenance part, would realize from an unaffiliated buyer in an arm's length sale of an identical product or maintenance part in the same quantity and at the same time and place as such sale, lease or use.

FIVE YEAR PERIOD means the period commencing on the effective date of this agreement and having a duration of five years.

LICENSED PRODUCT means, as to any respective grantee,

(i) any product as such, or

(ii) any product which is any specified combination.

of the kinds listed in section 2.01 or 2.02 of this agreement. Although the term does not mean, and although licenses are not granted for, any other combination, a LICENSED PRODUCT

(iii) shall not lose its status as such on account of, and

(iv) shall not cause an unlicensed combination to infringe the grantor's patents (i.e., WESTERN'S PATENTS or the CORPORATION'S PATENTS, as the case may be) solely on account of, such LICENSED PRODUCT being made, sold, leased or put into use as part of an unlicensed combination.

NET SELLING PRICE means the gross selling price of the ROYALTY-BEARING PRODUCT in the form in which it is sold, whether or not assembled (and without excluding therefrom any components or subassemblies thereof, whatever their origin and whether or not patent impacted), less the following items but only insofar as they pertain to the sale of such ROYALTY-BEARING PRODUCT by the CORPORATION or any of its SUBSIDIARIES and are included in such gross selling price:

(i) Usual trade discounts actually allowed (other than cash discounts, advertising allowances, or fees or commissions to any employees of the CORPORATION, a SUBSIDIARY of the CORPORATION, a company of which the CORPORATION is a SUBSIDIARY at the time of the sale, or any other SUBSIDIARY of a company of which the CORPORATION is a SUBSIDIARY at the time of such sale);

(ii) Packing costs;

(iii) Import, export, excise and sales taxes, and customs duties;

(iv) Costs of insurance and transportation from the place of manufacture to the customer's premises or point of installation;

(v) Costs of installation at the place of use; and

(vi) Costs of special engineering services not incident to the design or manufacture of the ROYALTY-BEARING PRODUCT.

ROYALTY-BEARING PRODUCT means any LICENSED PRODUCT of the kinds specified in section 2.01 of this agreement (other than any LICENSED PRODUCT for which all the licenses granted in this agreement are at a royalty rate of zero percent (0%)), and any maintenance part therefor,

(i) Which upon manufacture includes, or the manufacture of which employs, any invention of any of WESTERN'S PATENTS in force at the time and place of such manufacture, or

(ii) Which includes when sold, leased or put into use, or the use of which employs, any invention of any of WESTERN'S PATENTS in force at the time and place of such sale, lease or use,

other than:

(iii) Inventions under which the United States Government holds a royalty-free license if such LICENSED PRODUCT or part is contracted for, directly or indirectly, by the United States Government, or by another national government with funds derived through the Military Assistance Program or otherwise through the United States Government, and

(iv) Inventions employed in the manufacture of, or included in, such LICENSED PRODUCT or any original part thereof, or such maintenance part therefor or any

original part thereof, by a direct or indirect supplier of the CORPORATION or any of its SUBSIDIARIES, but only to the extent such supplier has exercised its own licenses granted by WESTERN under patents for such inventions to so employ or include said inventions.

SUBSIDIARY means a company the majority of whose stock entitled to vote for election of directors is now or hereafter controlled by the parent company either directly or indirectly, but any such company shall be deemed to be a SUBSIDIARY only so long as such control exists.

WESTERN'S PATENTS means all patents issued at any time in the United States for:

(i) Inventions made prior to the termination of the FIVE YEAR PERIOD and owned or controlled at any time during the FIVE YEAR PERIOD by AT&T, WESTERN or any of their SUBSIDIARIES,

(ii) Inventions made during the FIVE YEAR PERIOD, solely or jointly with anyone, and in the course of their employment by employees of any such company who are employed to do research, development or other inventive work, and

(iii) Any other inventions made prior to the termination of the FIVE YEAR PERIOD, with respect to which and to the extent to which any such company shall at any time during the FIVE YEAR PERIOD have the right to grant the licenses and rights which are herein granted by WESTERN;

provided, however, that said patents do not include those issued for inventions made by employees of any SUBSIDIARY of WESTERN or AT&T exclusively engaged in the performance of contracts with the Energy Research and Development Administration of the United States.

[41 FR 28699, July 12, 1976, as amended at 50 FR 47549, Nov. 19, 1985]

§ 68.506 Configurations used to connect multi-line communications systems such as Private Branch Exchange (PBX) and key telephone systems.

Any of the jack configurations specified in § 68.502, used singly, in multiple combinations, or combined in common mechanical arrays, may be used as the interface between multi-line equipment such as PBX and key telephone systems, and the telephone network. The telephone company and installation supervisor may mutually agree to use electrical connections alternative to those specified in § 68.502.

[43 FR 16501, Apr. 19, 1978]

PART 69—ACCESS CHARGES

Subpart A—General

Sec.
69.1 Application of access charges.
69.2 Definitions.
69.3 Filing of access service tariffs.
69.4 Charges to be filed.
69.5 Persons to be assessed.

Subpart B—Computation of Charges

69.101 General.
69.103 Limited pay telephone (public telephones that can access the services of only one interexchange carrier).
69.104 End user common line.
69.105 Carrier common line.
69.106 Local switching.
69.107 Equal access.
69.108 Transport rate benchmark.
69.109 Information.
69.110 Entrance facilities.
69.111 Tandem-switched transport and tandem charge.
69.112 Direct-trunked transport.
69.113 Non-premium charges for MTS–WATS equivalent services.
69.114 Special access.
69.115 Special access surcharges.
69.116 Universal service fund.
69.117 Lifeline assistance.
69.118 Traffic sensitive switched services.
69.119 Basic service element expedited approval process.
69.120 Line information database.
69.121 Connection charges for expanded interconnection.
69.122 Contribution charges for special access and expanded interconnection.
69.123 Density pricing zones for special access and switched transport.
69.124 Interconnection charge.
69.125 Dedicated signalling transport.
69.126 Nonrecurring charges.
69.127 Transitional Equal Charge Rule.
69.128 Billing name and address.
69.129 Signalling for tandem switching.

Subpart C—Computation of Transition Charges

69.201 General.
69.203 Transitional end user common line charges.
69.204 Optional alternative carrier common line tariff provisions.
69.205 Transitional premium charges.
69.209 Annual 1989 access tariff filings.

Subpart D—Apportionment of Net Investment

69.301 General.
69.302 Net investment.

69.303 Information origination/termination equipment (IOT).
69.304 Subscriber line cable and wire facilities.
69.305 Carrier cable and wire facilities (C&WF).
69.306 Central office equipment (COE).
69.307 General support facilities.
69.308 Equal access equipment.
69.309 Other investment.
69.310 Capital leases.

Subpart E—Apportionment of Expenses

69.401 Direct expenses.
69.402 Operating taxes (Account 7200).
69.403 Marketing expenses (Account 6610).
69.404 Telephone operator services expenses in Account 6620.
69.405 Published directory expenses in Account 6620.
69.406 Local business office expenses in Account 6620.
69.407 Revenue accounting expenses in Account 6620.
69.408 All other customer services expenses in Account 6620.
69.409 Corporate operations expenses (Accounts 6710 and 6720).
69.410 Equal access expenses.
69.411 Other expenses.
69.412 Non participating company payments/receipts.
69.413 Universal service fund expenses.
69.414 Lifeline assistance expenses.

Subpart F—Segregation of Common Line Element Revenue Requirement

69.501 General.
69.502 Base factor allocation.

Subpart G—Exchange Carrier Association

69.601 Exchange carrier association.
69.602 Board of directors.
69.603 Association functions.
69.604 Billing and collection of access charges.
69.605 Reporting and distribution of pool access revenues.
69.606 Computation of average schedule company payments.
69.607 Disbursement of Carrier Common Line residue.
69.608 Carrier Common Line hypothetical net balance.
69.609 End User Common Line hypothetical net balances.
69.610 Other hypothetical net balances.
69.611 Effect of optional alternative carrier common line tariff provisions and end user common line surcharges.
69.612 Long term and transitional support.

AUTHORITY: Secs. 4, 201, 202, 203, 205, 218, 403, 48 Stat. 1066, 1070, 1072, 1077, 1094, as amended, 47 U.S.C. 154, 201, 202, 203, 205, 218, 403.

SOURCE: 48 FR 10358, Mar. 11, 1983, unless otherwise noted.

Subpart A—General

§69.1 Application of access charges.

(a) This part establishes rules for access charges for interstate or foreign access services provided by telephone companies on or after January 1, 1984.

(b) Except as provided in §69.1(c), charges for such access service shall be computed, assessed, and collected and revenues from such charges shall be distributed as provided in this part. Access service tariffs shall be filed and supported as provided under part 61 of this chapter, except as modified herein.

(c) The following provisions of this part shall apply to telephone companies subject to price cap regulation only to the extent that application of such provisions is necessary to develop the nationwide average carrier common line charge, for purposes of reporting pursuant to §§43.21 and 43.22 of this chapter, and for computing initial transport rates: §§69.3(f), 69.105(b)(4), 69.105(b)(5), 69.106(b), 69.107(b), 69.107(c), 69.109(b), 69.110(d), 69.111(c), 69.111(g), 69.112(d), 69.114(b), 69.114(d), 69.125(b)(2), 69.205(e), 69.301 through 69.310, and 69.401 through 69.412. The computation of rates pursuant to these provisions by telephone companies subject to price cap regulation shall be governed by the price cap rules set forth in part 61 of this chapter and other applicable Commission Rules and orders.

[48 FR 10358, Mar. 11, 1983, as amended at 55 FR 42385, Oct. 19, 1990; 58 FR 41189, Aug. 3, 1993]

§69.2 Definitions.

For purposes of the part:

(a) *Access Minutes* or *Access Minutes of Use* is that usage of exchange facilities in interstate or foreign service for the purpose of calculating chargeable usage. On the orginating end of an interstate or foreign call, usage is to be measured from the time the originating end user's call is delivered by the telephone company and acknowledged as received by the interexchange carrier's facilities connected with the

originating exchange. On the terminating end of an interstate or foreign call, usage is to be measured from the time the call is received by the end user in the terminating exchange. Timing of usage at both the orginating and terminating end of an interstate or foreign call shall terminate when the calling or called party disconnects, whichever event is recognized first in the originating and terminating end exchanges, as applicable;

(b) *Access Service* includes services and facilities provided for the origination or termination of any interstate or foreign telecommunication;

(c) *Annual revenue requirement* means the sum of the return component and the expense component;

(d) *Association* means the telephone company association described in subpart G of this part;

(e) *Big Three Expenses* are the combined expense groups comprising: Plant Specific Operations Expense, Accounts 6110, 6120, 6210, 6220, 6230, 6310 and 6410; Plant Nonspecific Operations Expenses, Accounts 6510, 6530 and 6540, and Customer Operations Expenses, Accounts 6610 and 6620;

(f) *Big Three Expense Factors* are the ratios of the sum of Big Three Expenses apportioned to each element or category to the combined Big Three Expenses.

(g) *Cable and Wire Facilities* includes all equipment or facilities that are described as cable and wire facilities in the *Separations Manual* and included in Account 2410.

(h) *Carrier Cable and Wire Facilities* means all cable and wire facilities that are not subscriber line cable and wire facilities;

(i) *Central Office Equipment* or *COE* includes all equipment or facilities that are described as Central Office Equipment in the *Separations Manual* and included in Accounts 2210, 2220 and 2230.

(j) *Corporate Operations Expenses* include Executive and Planning Expenses (Account 6710) and General and Administrative Expenses (Account 6720);

(k) *Customer Operations Expenses* include Marketing and Services expenses in Accounts 6610 and 6620, respectively;

(l) *Direct Expense* means expenses that are attributable to a particular category or categories of tangible investment described in subpart D of this part and includes:

(1) Plant Specific Operations expenses in Accounts 6110, 6120, 6210, 6220, 6230, 6310 and 6410; and

(2) Plant Nonspecific Operations Expenses in Accounts 6510, 6530, 6540 and 6560;

(m) *End User* means any customer of an interstate or foreign telecommunications service that is not a carrier except that a carrier other than a telephone compauy shall be deemed to be an ''end user'' when such carrier uses a telecommunications service for administrative purposes and a person or entity that offers telecommunications services exclusively as a reseller shall be deemed to be an ''end user'' if all resale transmissions offered by such reseller originate on the premises of such reseller;

(n) *Entry Switch* means the telephone company switch in which a transport line or trunk terminates;

(o) *Expense Component* means the total expenses and income charges for an annual period that are attributable to a particular element or category;

(p) *Expenses* include allowable expenses in the Uniform System of Accounts, part 32, apportioned to interstate or international services pursuant to the *Separations Manual* and allowable income charges apportioned to interstate and international services pursuant to the *Separations Manual;*

(q) *General Support Facilities* include buildings, land, vehicles, aircraft, work equipment, furniture, office equipment and general purpose computers as described in the *Separations Manual* and included in Account 2110.

(r) *Information Origination/Termination Equipment* includes all equipment or facilities that are described as information origination/termination equipment in the *Separations Manual* and in Account 2310 except information origination/termination equipment that is used by telephone companies in their own operations.

(s) *Interexchange* or the *interexchange category* includes services or facilities provided as an integral part of interstate or foreign telecommunications that is not described as ''access service'' for purposes of this part;

(t) *Level I Contributors.* Telephone companies that are not association Common Line tariff participants, file their own Common Line tariffs effective April 1, 1989, and had a lower than average Common Line revenue requirement per minute of use in 1988 and thus were net contributors (*i.e.,* had a negative net balance) to the association Common Line pool in 1988.

(u) *Level I Receivers.* Telephone companies that are not association Common Line tariff participants, file their own Common Line tariffs effective April 1, 1989, and had a higher than average Common Line revenue requirement per minute of use in 1988 and thus were net receivers (*i.e.,* had a positive net balance) from the association Common Line Pool in 1988.

(v) *Level II Contributors.* A telephone company or group of affiliated telephone companies with fewer than 300,000 access lines and less than $150 million in annual operating revenues that is not an association Common Line tariff participant, that files its own Common Line tariff effective July 1, 1990, and that had a lower than average Common Line revenue requirement per minute of use in 1988 and thus was a net contributor (i.e., had a negative net balance) to the association Common Line pool in 1988.

(w) *Level II Receivers.* A telephone company or group of affiliated telephone companies with fewer than 300,000 access lines and less than $150 million in annual operating revenues that is not an association Common Line tariff participant, that files its own Common Line tariff effective July 1, 1990, and that had a higher than average Common Line revenue requirement per minute of use in 1988 and thus was a net receiver (i.e., had a positive net balance) from the association Common Line pool in 1988.

(x) *Line* or *Trunk* includes, but is not limited to, transmission media such as radio, satellite, wire, cable and fiber optic cable means of transmission;

(y) *Long Term Support* (LTS) means funds provided by telephone companies that are not association Common Line tariff participants to association Common Line tariff participants. LTS enables association Common Line tariff participants to charge a Common Line (CL) rate equivalent to the CL rate that would result if all telephone companies participated in the association Common Line tariff;

(z) *Net Investment* means allowable original cost investment in Accounts 2001 through 2003, 1220 and 1402 that has been apportioned to interstate and foreign services pursuant to the *Separations Manual* from which depreciation, amortization and other reserves attributable to such investment that has been apportioned to interstate and foreign services pursuant to the *Separations Manual* have been subtracted and to which working capital that is attributable to interstate and foreign services has been added;

(aa) *Operating Taxes* include all taxes in Account 7200;

(bb) *Origination* of a service that is switched in a Class 4 switch or an interexchange switch that performs an equivalent function ends when the transmission enters such switch and *termination* of such a service begins when the transmission leaves such a switch, except that;

(1) Switching in a Class 4 switch or transmission between Class 4 switches that is not deemed to be interexchange for purposes of the Modified Final Judgement entered August 24, 1982, in *United States v Western Electric Co.,* D.C. Civil Action No. 82–0192, will be ''origination'' or ''termination'' for purposes of this part; and

(2) *Origination* and *Termination* does not include the use of any part of a line, trunk or switch that is not owned or leased by a telephone company;

(cc) *Origination* of any service other than a service that is switched in a Class 4 switch or a switch that performs an equivalent function ends and ''termination'' of any such service begins at a point of demarcation that corresponds with the point of demarcation that is used for a service that is switched in a Class 4 switch or a switch that performs an equivalent function;

(dd) *Private Line* means a line that is used exclusively for an interexchange service other than MTS, WATS or an MTS–WATS equivalent service, including a line that is used at the closed end of an FX WATS or CCSA service or any service that is substantially equivalent to a CCSA service;

(ee) *Public Telephone* is a telephone provided by a telephone company through which an end user may originate interstate or foreign telecommunications for which he pays with coins or by credit card, collect or third number billing procedures;

(ff) *Return Component* means net investment attributable to a particular element or category multiplied by the authorized annual rate of return;

(gg) *Subscriber Line Cable and Wire Facilities* means all lines or trunks on the subscriber side of a Class 5 or end office switch, including lines or trunks that do not terminate in such a switch, except lines or trunks that connect an interexchange carrier;

(hh) *Telephone Company* means a carrier that provides telephone exchange service as defined in section 3(r) of the Communications Act of 1934;

(ii) *Transitional Support* (TRS) means funds provided by telephone companies that are not association Common Line tariff participants, but were net contributors to the association Common Line pool in 1988, to telephone companies that are not association Common Line tariff participants and were net receivers from the association Common Line pool in 1988;

(jj) *Unit of Capacity* means the capability to transmit one conversation;

(kk) *WATS Access Line* means a line or trunk that is used exclusively for WATS service.

(ll) *Equal access investment and equal access expenses* mean equal access investment and expenses as defined for purposes of the part 36 separations rules.

(mm) *Basic Service Elements* are optional unbundled features that enhanced service providers may require or find useful in the provision of enhanced services, as defined in Amendments of part 69 of the Commission's rules relating to the Creation of Access Charge Subelements for Open Network Architecture, Report and Order, 6 FCC Rcd _____, CC Docket No. 89–79, FCC 91–186 (1991).

(nn) Dedicated Signalling Transport means transport of out-of-band signalling information between an interexchange carrier or other person's common channel signalling network and a telephone company's signalling transport point on facilities dedicated to the use of a single customer.

(oo) *Direct-trunked transport* means transport on circuits dedicated to the use of a single interexchange carrier or other person, without switching at the tandem,

(1) Between the serving wire center and the end office, or

(2) Between two customer-designated telephone company offices.

(pp) End Office means the telephone company office from which the end user receives exchange service.

(qq) Entrance Facilities means transport from the interexchange carrier or other person's point of demarcation to the serving wire center.

(rr) Serving Wire Center means the telephone company central office designated by the telephone company to serve the geographic area in which the interexchange carrier or other person's point of demarcation is located.

(ss) *Tandem-switched transport* means transport of traffic that is switched at a tandem switch—

(1) Between the serving wire center and the end office, or

(2) Between the telephone company office containing the tandem switching equipment, as described in § 36.124 of this chapter, and the end office.

Tandem-switched transport between a serving wire center and an end office consists of circuits dedicated to the use of a single interexchange carrier or other person from the serving wire center to the tandem (although this dedicated link will not exist if the serving wire center and the tandem are located in the same place) and circuits used in common by multiple interexchange carriers or other persons from the tandem to the end office.

(tt) *Initial transport rates* means rates for entrance facilities, direct-trunked transport, tandem-switched transport, dedicated signalling transport, and the interconnection charge in tariffs filed on September 1, 1993 pursuant to the Report and Order in Transport Rate Structure and Pricing, CC Docket No. 91–213, FCC 92–442, 7 FCC Rcd 7006 (1992).

(uu) *Price cap regulation* means the method of regulation of dominant carriers provided in §§ 61.41 through 61.49 of this chapter.

(vv) *Signalling for tandem switching* means the carrier identification code (CIC) and the OZZ code, or equivalent information needed to perform tandem switching functions. The CIC identifies the interexchange carrier and the OZZ identifies the interexchange carrier trunk to which traffic should be routed.

[52 FR 37309, Oct. 6, 1987, as amended at 53 FR 28395, July 28, 1988; 53 FR 30059, Aug. 10, 1988; 54 FR 3456, Jan. 24, 1989; 54 FR 11718, Mar. 22, 1989; 55 FR 6990, Feb. 28, 1990; 56 FR 33880, July 24, 1991; 57 FR 54719, Nov. 20, 1992; 58 FR 41189, Aug. 3, 1993; 59 FR 32930, June 27, 1994]

§69.3 Filing of access service tariffs.

(a) Except as provided in paragraphs (g) and (h) of this section, a tariff for access service shall be filed with this Commission for a two-year period. Such tariffs shall be filed on a minimum of 90 days' notice with a scheduled effective date of July 1. Such tariff filings shall be limited to rate level changes.

(b) The requirements imposed by paragraph (a) of this section shall not preclude the filing of revisions to those annual tariffs that will become effective on dates other than July 1.

(c) Any access service tariff filing, the filing of any petitions for rejection, investigation or suspension and the filing of any responses to such petitions shall comply with the applicable rules of this Commission relating to tariff filings.

(d) The association shall file a tariff as agent for all telephone companies that participate in an association tariff.

(e) A telephone company or group of telephone companies may file a tariff that is not an association tariff, except that a group rate for non-affiliated telephone companies may not be filed under §61.50 of this chapter; e.g., the Association. Such a tariff may cross-reference the association tariff for some access elements and include separately computed charges of such company or companies for other elements. Any such tariff must comply with the requirements hereinafter provided:

(1) Such a tariff must cross reference association charges for the Carrier Common Line and End User Common Line element or elements if such company or companies participate in the pooling of revenues and revenue requirements for such elements.

(2) Such a tariff that cross-references an association charge for any end user access element must cross-reference association charges for all end user access elements;

(3) Such a tariff that cross-references an association charge for any carrier's carrier access element other than the Carrier Common Line element must cross-reference association charges for all carrier's carrier access charges other than the Carrier Common Line element;

(4) Except for charges subject to price cap regulation as that term is defined in §61.3(v) of this chapter, any charge in such a tariff that is not an association charge must be computed to reflect the combined investment and expenses of all companies that participate in such a charge;

(5) A telephone company or companies that elect to file such a tariff for 1984 access charges shall notify AT&T on or before the 40th day after the release of the Commission order adopting this part;

(6) A telephone company or companies that elect to file such a tariff shall notify the association not later than December 31 of the preceding year, if such company or companies did not file such a tariff in the preceding annual period or cross-reference association charges in such preceding period that will not be cross-referenced in the new tariff.

(7) Such a tariff shall not contain charges for any access elements that are disaggregated or deaveraged within a study area that is used for purposes of jurisdictional separations.

(8) Such a tariff shall not contain charges included in the billing and collection category.

(9) A telephone company or group of affiliated telephone companies that elects to file it own Carrier Common Line tariff effective April 1, 1989 shall notify the association not later than August 30 of the preceding year that it will no longer participate in the association tariff. A telephone company or group of affiliated telephone companies that elects to file its own Carrier Common Line tariff effective July 1, 1990 or

thereafter pursuant to § 69.3(a) shall notify the association not later than December 31 of the preceding year that it will no longer participate in the association tariff. A telephone company or group of affiliated telephone companies that electes to file its own Carrier Common Line tariff for one its study areas shall file its own Carrier Common Line tariff(s) for all of its study areas.

(10) Any data supporting a tariff that is not an association tariff shall be consistent with any data that the filing carrier submitted to the association.

(11) Any changes in Association common line tariff participation and Long Term and Transitional Support resulting from the merger or acquisition of telephone properties are to be made effective on the next annual access tariff filing effective date following consummation of the merger or acquisition transaction, in accordance with the provisions of § 69.3(e)(9).

(f) A tariff for access service provided by a telephone company that may file an access tariff pursuant to § 61.39 may be filed for a biennial period with a minimum of 90 days notice and scheduled effective date of July 1 of any odd numbered year. An eligible telephone company that does not elect to file an access tariff pursuant to the § 61.39 procedures may elect to file a biennial tariff pursuant to this section. For purposes of computing charges for access elements other than Common Line elements to be effective on July 1 of any even-numbered year, the association may compute rate changes based upon statistical methods which represent a reasonable equivalent to the cost support information otherwise required under part 61 of this chapter.

(g) The following rules apply to telephone company participation in the Association common line pool for telephone companies involved in a merger or acquisition.

(1) Notwithstanding the requirements of § 69.3(e)(9), any Association common line tariff participant that is party to a merger or acquisition may continue to participate in the Association common line tariff.

(2) Notwithstanding the requirements of § 69.3(e)(9), any Association common line tariff participant that is party to a merger or acquisition may include other telephone properties involved in the transaction in the Association common line tariff, provided that the net addition of common lines to the Association common line tariff resulting from the transaction in not greater than 50,000, and provided further that, if any common lines involved in a merger or acquisition are returned to the Association common line tariff, all of the common lines involved in the merger or acquisition must be returned to the Association common line tariff.

(3) Telephone companies involved in mergers or acquisitions that wish to have more than 50,000 common lines reenter the Association common line pool must request a waiver of § 69.3(e)(9). If the telephone company has met all other legal obligations, the waiver request will be deemed granted on the sixty-first (61st) day from the date of public notice inviting comment on the requested waiver unless:

(i) The merger or acquisition involves one or more partial study areas;

(ii) The waiver includes a request for confidentiality of some or all of the materials supporting the request;

(iii) The waiver includes a request to return only a portion of the telephone properties involved in the transaction to the Association common line tariff;

(iv) The Commission rejects the waiver request prior to the expiration of the sixty-day period;

(v) The Commission requests additional time or information to process the waiver application prior to the expiration of the sixty-day period; or

(vi) A party, in a timely manner, opposes a waiver request or seeks conditional approval of the waiver in response to our public notice of the waiver request.

(h) Local exchange carriers subject to price cap regulation as that term is defined in § 61.3(v) of this chapter, shall file with this Commission a price cap tariff for access service for an annual period. Subject to § 61.48, such tariffs shall be filed to provide a minimum of 90 days' notice with a scheduled effective date of July 1. Such tariff filings shall be limited to changes in the Price Cap Indexes, rate level changes (with

corresponding adjustments to the affected Actual Price Indexes and Service Band Indexes), and the incorporation of new services into the affected indexes as required by §61.49 of this chapter.

(i) The following rules apply to the withdrawal from Association tariffs under the provision of paragraph (e)(6) or (e)(9) of this section or both by telephone companies electing to file price cap tariffs pursuant to paragraph (h) of this section or optional incentive plan tariffs pursuant to §61.50 of this chapter.

(1) In addition to the withdrawal provisions of paragraphs (e) (6) and (9) of this section, a telephone company or group of affiliated telephone companies that participates in one or more Association tariffs during the current tariff year and that elects to file price cap tariffs or optional incentive regulation tariffs effective July 1 of the following tariff year, shall give the Association at least 6 months' notice that it is withdrawing from Association tariffs, subject to the terms of this section, to participate in price cap regulation or optional incentive regulation.

(2) The Association shall maintain records of such withdrawals sufficient to discharge its obligations under these Rules and to detect efforts by such companies or their affiliates to rejoin any Association tariffs in violation of the provisions of paragraph (i)(4) of this section.

(3) Notwithstanding the provisions of paragraphs (e) (3), (6), and (9) of this section, in the event a telephone company withdraws from all Association tariffs for the purpose of filing price cap tariffs or optional incentive plan tariffs, such company shall exclude from such withdrawal all ''average schedule'' affiliates and all affiliates so excluded shall be specified in the withdrawal. However, such company may include one or more ''average schedule'' affiliates in price cap regulation or optional incentive plan regulation provided that each price cap or optional incentive plan affiliate relinquishes ''average schedule'' status and withdraws from all Association tariffs and any tariff filed pursuant to §61.39(b)(2) of this chapter. See generally §§69.605(c), 61.39(b) of this chapter; MTS and WATS Market Structure: Average Schedule Companies, Report and Order, 103 FCC 2d 1026–1027 (1986).

(4) If a telephone company elects to withdraw from Association tariffs and thereafter becomes subject to price cap regulation as that term is defined in §61.3(v) of this chapter, neither such telephone company nor any of its withdrawing affiliates shall thereafter be permitted to participate in any Association tariffs.

(j) A telephone company or group of affiliated telephone companies that participates in an association tariff and elects to file its own tariff pursuant to §61.50 of this chapter by January 1, 1994 shall notify the association not later than September 1, 1993 that it will no longer participate in the association tariff. This January 1, 1994 filing shall be for an 18-month tariff period. A telephone company or group of affiliated telephone companies that participates in an association tariff and elects to file its own tariff pursuant to §61.50 of this chapter, by July 1, 1994 or thereafter pursuant to paragraph (a) of this section, shall notify the association not later than December 31 of the preceding year that it will no longer participate in that association tariff.

(47 U.S.C. 154 (i) and (j), 201, 202, 203, 205, 218 and 403 and 5 U.S.C. 553)

[48 FR 10358, Mar. 11, 1983, as amended at 48 FR 43017, Sept. 21, 1983; 50 FR 41356, Oct. 10, 1985; 51 FR 6119, Feb. 20, 1986; 51 FR 42236, Nov. 24, 1986; 52 FR 21540, June 8, 1987; 52 FR 37310, Oct. 6, 1987; 53 FR 36289, Sept. 19, 1988; 54 FR 39534, Sept. 27, 1989; 55 FR 6990, Feb. 28, 1990; 55 FR 42385, Oct. 19, 1990; 55 FR 50558, Dec. 7, 1990; 58 FR 36149, July 6, 1993]

§69.4 Charges to be filed.

(a) The end user charges for access service filed with this Commission shall include charges for the End User Common Line element.

(b) Except as provided in subpart C of this part, in §§69.4 (c), (d), (e), and (f), and in §69.118, the carrier's carrier charges for access service filed with this Commission shall include charges for each of the following elements:

(1) Limited pay telephone;
(2) Carrier common line;
(3) Local switching;
(4) Information;

(5) Tandem-switched transport;
(6) Direct-trunked transport;
(7) Special access; and
(8) Line information database;
(9) Entrance facilities.

(c) For all tariffs filed with this Commission that become effective after March 31, 1989, the carrier's carrier charges for access service shall include charges for each of the elements listed in § 69.4(b) and for each of the following elements:

(1) Universal Service Fund;
(2) Lifeline Assistance.

(d) For the period June 1, 1988 through December 31, 1993, all telephone companies may implement a separate carrier's carrier tariff charge for an Equal Access element. Effective January 1, 1994, all telephone companies shall eliminate separate carrier's carrier tariff charges for an Equal Access element.

(e) The carrier's carrier charges for access service filed with this Commission by the telephone companies specified in § 64.1401(a) of this chapter shall include an element for connection charges for expanded interconnection. The carrier's carrier charges for access service filed with this Commission by the telephone companies not specified in § 64.1401(a) of this chapter may include an element for connection charges for expanded interconnection.

(f) All telephone companies may implement a separate carrier's carrier tariff charge for the contribution charge element described in § 69.122, if authorized by the Commission by order.

[48 FR 43017, Sept. 21, 1983, as amended at 52 FR 21540, June 8, 1987; 52 FR 37310, Oct. 6, 1987; 54 FR 11718, Mar. 22, 1989; 56 FR 33880, July 24, 1991; 57 FR 24380, June 9, 1992; 57 FR 54332, Nov. 18, 1993; 57 FR 54719, Nov. 20, 1993; 58 FR 30995, May 28, 1993]

§ 69.5 Persons to be assessed.

(a) End user charges shall be computed and assessed upon end users, as defined in this subpart, and as provided in subpart B of this part.

(b) Carrier's carrier charges shall be computed and assessed upon all interexchange carriers that use local exchange switching facilities for the provision of interstate or foreign telecommunications services.

(c) Special access surcharges shall be assessed upon users of exchange facilities that interconnect these facilities with means of interstate or foreign telecommunications to the extent that carrier's carrier charges are not assessed upon such interconnected usage. As an interim measure pending the development of techniques accurately to measure such interconnected use and to assess such charges on a reasonable and non-discriminatory basis, telephone companies shall assess special access surcharges upon the closed ends of private line services and WATS services pursuant to the provisions of § 69.115 of this part.

(d) Universal Service Fund and Lifeline Assistance charges shall be assessed upon all interexchange carriers that use local exchange switching facilities for the provision of interstate or foreign telecommunications services and that have at least .05 percent of the total common lines presubscribed to interexchange carriers in all study areas.

(47 U.S.C. 154 (i) and (j), 201, 202, 203, 205, 218 and 403 and 5 U.S.C. 553)

[48 FR 43017, Sept. 21, 1983, as amended at 51 FR 10840, Mar. 31, 1986; 51 FR 33752, Sept. 23, 1986; 52 FR 21540, June 8, 1987; 54 FR 50624, Dec. 8, 1989]

Subpart B—Computation of Charges

§ 69.101 General.

Except as provided in § 69.1 and subpart C of this part, charges for each access element shall be computed and assessed as provided in this subpart.

[55 FR 42386, Oct. 19, 1990]

§ 69.103 Limited pay telephone (public telephones that can access the services of only one interexchange carrier).

(a) A charge that is expressed in dollars and cents per line per month shall be assessed upon an interexchange carrier for each line terminating in a public telephone which can be used to originate any of its interstate or foreign telecommunications services, but not such services of other interexchange carriers.

(b) The per line charge shall be computed by dividing one-twelfth of the projected annual revenue requirement for the Limited Pay Telephone element by the projected average number of public telephones which can access the services of only one interexchange carrier.

[52 FR 37310, Oct. 6, 1987]

§69.104 End user common line.

(a) A charge that is expressed in dollars and cents per line per month shall be assessed upon end users that subscribe to local exchange telephone service, Centrex or semi-public coin telephone service to the extent they do not pay carrier common line charges. Such charge shall be assessed for each line between the premises of an end user and a Class 5 office that is or may be used for local exchange service transmissions.

(b) Charges to multi-line subscribers shall be computed by multiplying a single line rate by the number of lines used by such subscriber.

(c) Except as provided in §69.104(d) through (h), the single line rate or charge shall be computed by dividing one-twelfth of the projected annual revenue requirement for the End User Common Line element by the projected average number of local exchange service subscriber lines in use during such annual period.

(d) If the monthly charge computed in accordance with §69.104(c) exceeds $6, the charge for each local exchange service subscriber line, except a residential line, a single-line business line, or a line used for Centrex-CO service that was in place or on order as of July 27, 1983, shall be $6.

(e) The monthly charge for each residential or single line business local exchange service subscriber shall be the charge computed in accordance with §69.104(c), or the relevant transitional charge established in §69.203, whichever is lower.

(f) Except as provided in §69.104 (j) and (k), the charge for each residential local exchange service subscriber line shall be the same as the charge for each single line business local exchange service subscriber line.

(g) A line shall be deemed to be a residential line if the subscriber pays a rate for such line that is described as a residential rate in the local exchange service tariff.

(h) A line shall be deemed to be a single line business line if the subscriber pays a rate that is not described as a residential rate in the local exchange service tariff and does not obtain more than one such line from a particular telephone company.

(i) The End User Common Line charge for each multi-party subscriber shall be assessed as if such subscriber had subscribed to single-party service.

(j) The End User Common Line charge for a residential subscriber shall be 50% of the charge specified in §69.104 (c) and (d) if the residential local exchange service rate for such subscribers is reduced by an equivalent amount, *Provided*, That such local exchange service rate reduction is based upon a means test that is subject to verification.

(k)(1) The End User Common Line charge for residential subscribers shall be reduced to the extent of the state assistance as calculated in paragraph (k)(2) of this section, or waived in full if the state assistance equals or exceeds the residential End User Common Line charge under the circumstances described below. In order to qualify for this waiver, the subscriber must be eligible for and receive assistance or benefits provided pursuant to a narrowly targeted telephone company lifeline assistance program, requiring verification of eligibility, implemented by the State or local telephone company. A state or local telephone company wishing to implement this End User Common Line reduction or waiver for its subscribers shall file information with the Commission Secretary demonstrating that its plan meets the criteria set out in this section and showing the amount of state assistance per subscriber as described in paragraph (k)(2) of this section. The reduction or waiver of the End User Common Line charge shall be available as soon as the Commission certifies that the State or local telephone plan satisfies the criteria set out in this paragraph and the relevant tariff provisions become effective.

(2)(i) The State assistance per subscriber shall be equal to the difference

between the charges to be paid by the participating subscribers and those to be paid by other subscribers for comparable monthly local exchange service, service connections and customer deposits, except that benefits or assistance for connection charges and deposit requirements may only be counted once annually. In order to be included in calculating the state assistance, such benefits must be for a single telephone line to the household's principal residence.

(ii) The monthly state assistance per participating subcriber shall be calculated by adding the amounts calculated in paragraphs (k)(2)(ii) (A) and (B) of this section.

(A) The amount of the monthly State assistance per participating subscriber for local exchange service shall be calculated by dividing the annual difference between charges paid by all participating subscribers for residential local exchange service and the amount which would have been charged to non-qualifying subscribers for comparable service by twelve times the number of subscribers participating in the State assistance program. Estimates may be used when historic data are not available.

(B) The amount of the monthly State assistance for service connections and customer deposits per participating subscriber shall be calculated by determining the annual amount of the reductions in these charges for participating subscribers each year and dividing this amount by twelve times the number of participating subscribers. Estimates may be used when historic data are not available.

(l) In connection with the filing of access tariffs pursuant to § 69.3(a), telephone companies shall calculate for the association their projected revenue requirements attributable to the operation of § 69.104 (j) through (k). The projected amount will be adjusted by the association to reflect the actual lifeline assistance benefits paid in the previous period. If the actual benefits exceeded the projected amount for that period, the differential will be added to the projection for the ensuing period. If the actual benefits were less than the projected amount for that period, the differential will be subtracted from the projection for the ensuing period. The association shall so adjust amounts to the Lifeline Assistance revenue requirement, bill and collect such amounts from interexchange carriers pursuant to § 69.117 and distribute the funds to qualifying telephone companies pursuant to § 69.603(d).

(m) No charge shall be assessed for any WATS access line.

[48 FR 10358, Mar. 11, 1983, as amended at 48 FR 43018, Sept. 21, 1983; 52 FR 21540, June 8, 1987; 53 FR 28395, July 28, 1988]

§ 69.105 Carrier common line.

(a) A charge that is expressed in dollars and cents per access minute of use shall be assessed upon all interexchange carriers that use local exchange common line facilities for the provision of interstate or foreign telecommunications services, except that the charge shall not be assessed upon interexchange carriers to the extent they resell MTS or MTS-type services of other common carriers (OCCs).

(b)(1) For purposes of this section and § 69.113:

(i) A carrier or other person shall be deemed to receive premium access if access is provided through a local exchange switch that has the capability to provide access for an MTS–WATS equivalent service that is substantially equivalent to the access provided for MTS or WATS, except that access provided for an MTS–WATS equivalent service that does not use such capability shall not be deemed to be premium access until six months after the carrier that provides such MTS–WATS equivalent service receives actual notice that such equivalent access is or will be available at such switch;

(ii) The term *open end* of a call describes the origination or termination of a call that utilizes exchange carrier common line plant (a call can have no, one, or two open ends); and

(iii) All open end minutes on calls with one open end (*e.g.*, an 800 or FX call) shall be treated as terminating minutes.

(2) For association Carrier Common Line tariff participants:

(i) The premium originating Carrier Common Line charge shall be one cent per minute, except as described in § 69.105(b)(3), and

(ii) The premium terminating Carrier Common Line charge shall be computed as follows:

(A) For each telephone company subject to price cap regulation, multiply the company's proposed premium originating rate by a number equal to the sum of the premium originating base period minutes and a number equal to 0.45 multiplied by the non-premium originating base period minutes of that telephone company;

(B) For each telephone company subject to price cap regulation, multiply the company's proposed premium terminating rate by a number equal to the sum of the premium terminating base period minutes and a number equal to 0.45 multiplied by the non-premium terminating base period minutes of that telephone company;

(C) Sum the numbers computed in paragraphs (b)(2)(ii) (A) and (B) of this section for all companies subject to price cap regulation;

(D) From the number computed in paragraph (b)(2)(ii)(C) of this section, subtract a number equal to one cent times the sum of the premium originating base period minutes and a number equal to 0.45 multiplied by the non-premium originating base period minutes of all telephone companies subject to price cap regulation, and;

(E) Divide the number computed in paragraph (b)(2)(ii)(D) of this section by the sum of the premium terminating base period minutes and a number equal to 0.45 multiplied by the non-premium terminating base period minutes of all telephone companies subject to price cap regulation.

(3) If the calculations described in § 69.105(b)(2) result in a per minute charge on premium terminating minutes that is less than once cent, both the originating and terminating premium charges for the association CCL tariff participants shall be computed by dividing the number computed in paragraph (b)(2)(ii)(C) of this section by a number equal to the sum of the premium originating and terminating base period minutes and a number equal to 0.45 multiplied by the sum of the non-premium originating and terminating base period minutes of all telephone companies subject to price cap regulation.

(4) The Carrier Common Line charges of telephone companies that are not association Carrier Common Line tariff participants shall be computed at the level of Carrier Common Line access element aggregation selected by such telephone companies pursuant to § 69.3(e)(7). For each such Carrier Common Line access element tariff—

(i) The premium originating Carrier Common Line charge shall be one cent per minute, and

(ii) The premium terminating Carrier Common Line charge shall be computed by subtracting the projected revenues generated by the originating Carrier Common Line charges (both premium and non-premium) from the Carrier Common Line revenue requirement for the companies participating in that tariff, and dividing the remainder by the sum of the projected premium terminating minutes and a number equal to .45 multiplied by the projected non-premium terminating minutes for such companies.

(5) If the calculations described in § 69.105(b)(4) result in a per minute charge on premium terminating minutes that is less than one cent, both the originating and terminating premium charges for the companies participating in said Carrier Common Line tariff shall be computed by dividing the projected Carrier Common Line revenue requirement for such companies by the sum of the projected premium minutes and a number equal to .45 multiplied by the projected non-premium minutes for such companies.

(6) Telephone companies that are not association Carrier Common Line tariff participants shall submit to the Commission and to the association whatever data the Commission shall determine are necessary to calculate the charges described in this section.

(7) The Carrier Common Line charges of telephone companies that are subject to price cap regulation as that term is defined in § 61.3(v) of this chapter, shall be computed at the level of Carrier Common Line access element aggregation selected by such telephone companies, subject to § 69.3(e)(7). For each such Carrier Common Line access element tariff, the premium originating Carrier Common Line charge shall be one cent per minute. The premium

terminating Carrier Common Line charge shall be set at a level that, when aggregated with the one cent originating charge and the non-premium originating and terminating carrier common line charges, shall not cause the aggregate carrier common line charge for the common line basket to exceed the capped charge computed pursuant to § 61.46(d) for that basket. The non-premium charges shall be equal to .45 multiplied by the premium charges.

(8) If the calculations described in paragraph (b)(7) of this section result in a per minute charge on premium terminating minutes that is less than one cent, the originating and terminating charges shall be equal, and set at a level that does not cause the aggregate carrier common line charge for the common line basket to exceed the capped charge computed pursuant to § 61.46(d). The non-premium charges shall be equal to .45 multiplied by the premium charge.

(c) Any interexchange carrier shall receive a credit for Carrier Common Line charges to the extent that it resells services for which these charges have already been assessed (*e.g.*, MTS or MTS-type service of other common carriers).

[51 FR 10841, Mar. 31, 1986, as amended at 52 FR 21541, June 8, 1987; 54 FR 6293, Feb. 9, 1989; 55 FR 42386, Oct. 19, 1990; 56 FR 21618, May 10, 1991]

§ 69.106 Local switching.

(a) Except as provided in § 69.118, charges that are expressed in dollars and cents per access minute of use shall be accessed upon all interexchange carriers that use local exchange switching facilities for the provision of interstate or foreign services.

(b) A per minute charge shall be computed by dividing the projected annual revenue requirement for the Local Switching element by the projected annual access minutes of use for all interstate or foreign services that use local exchange switching facilities.

(c) If end users of an interstate or foreign service that uses local switching facilities pay message unit charges for such calls in a particular exchange, a credit shall be deducted from the Local Switching element charges to such carrier for access service in such exchange. The per minute credit for each such exchange shall be multiplied by the monthly access minutes for such service to compute the monthly credit to such a carrier.

(d) If all local exchange subscribers in such exchange pay message unit charges, the per minute credit described in paragraph (c) of this section shall be computed by dividing total message unit charges to all subscribers in a particular exchange in a representative month by the total minutes of use that were measured for purposes of computing message unit charges in such month.

(e) If some local exchange subscribers pay message unit charges and some do not, a per minute credit described in paragraph (c) of this section shall be computed by multiplying a credit computed pursuant to paragraph (d) of this section by a factor that is equal to total minutes measured in such month for purposes of computing message unit charges divided by the total local exchange minutes in such month.

[52 FR 37310, Oct. 6, 1987, as amended at 56 FR 33881, July 24, 1991]

§ 69.107 Equal access.

(a) A monthly charge that is expressed in dollars and cents either per Feature Group D trunk, per presubscribed equal access line, or per trunk line that is receiving from a local exchange switch service that is substantially equivalent to the access provided for MTS or WATS, shall be assessed by telephone companies that implement an Equal Access element as provided in § 69.4(d) upon all interexchange carriers for either the interstate and foreign Feature Group D access service trunks the interexchange carriers uses, the interstate and foreign access service trunk lines receiving service substantially equivalent to the access provided for MTS or WATS from a local exchange switch, or the presubscribed equal access lines the carrier serves.

(b) A monthly charge per Feature Group D trunk or per trunk line that is receiving from a local exchange switch service that is substantially equivalent to the access provided for MTS or WATS shall be computed by dividing

the projected annual revenue requirement for the Equal Access element by twelve times the projected annual average number of the total of interstate and foreign Feature Group D access service trunks and interstate and foreign access service trunk lines receiving service substantially equivalent to the access provided for MTS or WATS from a local exchange switch.

(c) A monthly charge per presubscribed equal access line shall be computed by dividing the projected annual revenue requirement for the Equal Access element by twelve times the projected annual average number of presubscribed equal access lines.

[54 FR 11718, Mar. 22, 1989, as amended by 56 FR 33881, July 24, 1991]

§69.108 Transport rate benchmark.

(a) For transport charges computed in accordance with this subpart, the DS3-to-DS1 benchmark ratio shall be calculated as follows: the telephone company shall calculate the ratio of:

(1) The total charge for a 1.609 km (1 mi) channel termination, 16.09 km (10 mi) of interoffice transmission, and one DS3 multiplexer using the telephone company's DS3 special access rates to;

(2) The total charge for a 1.609 km (1 mi) channel termination plus 16.09 km (10 mi) of interoffice transmission using the telephone company's DS1 special access rates.

(b) Initial transport rates will generally be presumed reasonable if they are based on special access rates with a DS3-to-DS1 benchmark ratio of 9.6 to 1 or higher.

(c) If a telephone company's initial transport rates are based on special access rates with a DS3–to–DS1 benchmark ratio of less than 9.6 to 1, those initial transport rates will generally be suspended and investigated absent a substantial cause showing by the telephone company. Alternatively, the telephone company may adjust its initial transport rates so that the DS3–to–DS1 ratio calculated as described in paragraph (a) of this section of those rates is 9.6 or higher. In that case, initial transport rates that depart from existing special access rates effective on September 1, 1992 so as to be consistent with the benchmark will be presumed reasonable only so long as the ratio of revenue recovered through the interconnection charge to the revenue recovered through facilities-based charges is the same as it would be if the telephone company's existing special access rates effective on September 1, 1992 were used.

[58 FR 41189, Aug. 3, 1993, as amended at 58 FR 44952, Aug. 25, 1993; 58 FR 45267, Aug. 27, 1993]

§69.109 Information.

(a) A charge shall be assessed upon all interexchange carriers that are connected to assistance boards through interexchange directory assistance trunks.

(b) Except as provided in §69.118, if such connections are maintained exclusively by carriers that offer MTS, the projected annual revenue requirement for the Information element shall be divided by 12 to compute the monthly assessment to such carriers.

(c) If such connections are provided to additional carriers, charges shall be established that reflect the relative use of such directory assistance service by such interexchange carriers.

[48 FR 10358, Mar. 11, 1983, as amended at 56 FR 33881, July 24, 1991]

§69.110 Entrance facilities.

(a) A flat-rated entrance facilities charge expressed in dollars and cents per unit of capacity shall be assessed upon all interexchange carriers and other persons that use telephone company facilities between the interexchange carrier or other person's point of demarcation and the serving wire center.

(b)(1) For telephone companies subject to price cap regulation, initial entrance facilities charges based on special access channel termination rates for equivalent voice grade, DS1, and DS3 services as of September 1, 1992, adjusted for changes in the price cap index calculated for the July 1, 1993 annual filing for telephone companies subject to price cap regulation, generally shall be presumed reasonable if the benchmark defined in §69.108 is satisfied. Entrance facilities charges may be distance-sensitive. Distance shall be

measured as airline kilometers between the point of demarcation and the serving wire center.

(2) For telephone companies not subject to price cap regulation, entrance facilities charges based on special access channel termination rates for equivalent voice grade, DS1, and DS3 services generally shall be presumed reasonable if the benchmark defined in § 69.108 is satisfied. Entrance facilities charges may be distance-sensitive. Distance shall be measured as airline kilometers between the point of demarcation and the serving wire center.

(c) If the telephone company employs distance-sensitive rates:

(1) A distance-sensitive component shall be assessed for use of the transmission facilities, including any intermediate transmission circuit equipment between the end points of the entrance facilities; and

(2) A nondistance-sensitive component shall be assessed for use of the circuit equipment at the ends of the transmission links.

(d) Telephone companies shall apply only their shortest term special access rates in setting entrance facilities charges.

(e) Except as provided in paragraphs (f), (g), and (h) of this section, telephone companies shall not offer entrance facilities based on term discounts or volume discounts for multiple DS3s or any other service with higher volume than DS3.

(f) Except in the situations set forth in paragraphs (g) and (h) of this section, telephone companies may offer term and volume discounts in entrance facilities charges within each study area used for the purpose of jurisdictional separations, in which interconnectors have taken either:

(1) At least 100 DS1-equivalent cross-connects for the transmission of switched traffic (as described in § 69.121(a)(1) of this chapter) in offices in the study area that the telephone company has assigned to the lowest priced density pricing zone (zone 1) under an approved density pricing zone plan as described in §§ 61.38(b)(4) and 61.49(k) of this chapter; or

(2) An average of at least 25 DS1-equivalent cross-connects for the transmission of switched traffic per office assigned to the lowest priced density pricing zone (zone 1).

(g) In study areas in which the telephone company has implemented density zone pricing, but no offices have been assigned to the lowest price density pricing zone (zone 1), telephone companies may offer term and volume discounts in entrance facilities charges within the study area when interconnectors have taken at least 5 DS1-equivalent cross-connects for the transmission of switched traffic (as described in § 69.121(a)(1) of this chapter) in offices in the study area.

(h) In study areas in which the telephone company has not implemented density zone pricing, telephone companies may offer term and volume discounts in entrance facilities charges when interconnectors have taken at least 100 DS1-equivalent cross-connects for the transmission of switched traffic (as described in § 69.121(a)(1) of this chapter) in offices in the study area.

[57 FR 54720, Nov. 20, 1992, as amended at 58 FR 41190 and 41191, Aug. 3, 1993; 58 FR 44950, Aug. 25, 1993; 58 FR 48763, Sept. 17, 1993; 59 FR 10304, Mar. 4, 1994; 60 FR 50121, Sept. 28, 1995]

§ 69.111 Tandem-Switched Transport and Tandem Charge.

(a) Tandem-Switched transport shall consist of two rate elements, a transmission charge and a tandem switching charge.

(b) A tandem-switched transmission charge expressed in dollars and cents per access minute shall be assessed upon all interexchange carriers and other persons that use telephone company tandem-switched transport facilities.

(c) Tandem-switched transport transmission charges generally shall be presumed reasonable if the telephone company bases the charges on a weighted per-minute equivalent of direct-trunked transport DS1 and DS3 rates that reflects the relative number of DS1 and DS3 circuits used in the tandem to end office links (or a surrogate based on the proportion of copper and fiber facilities in the interoffice network), calculated using a loading factor of 9000 minutes per month per voice-grade circuit. Tandem-switched transport transmission charges that are not presumed reasonable generally

shall be suspended and investigated absent a substantial cause showing by the telephone company.

(d) Tandem-switched transport transmission charges may be distance-sensitive. Mileage shall be measured as airline mileage between the serving wire center and the end office, unless the customer has ordered tandem-switched transport between the tandem office and the end office, in which case mileage shall be measured as airline mileage between the tandem office and the end office.

(e) If the telephone company employs distance-sensitive rates:

(1) A distance-sensitive component shall be assessed for use of the transmission facilities, including intermediate transmission circuit equipment between the end points of the interoffice circuit; and

(2) A nondistance-sensitive component shall be assessed for use of the circuit equipment at the ends of the interoffice transmission links.

(f) A tandem switching charge expressed in dollars and cents per access minute shall be assessed upon all interexchange carriers and other persons that use telephone company tandem switching facilities.

(g) The tandem charge shall be set to recover twenty percent of the annual part 69 interstate tandem revenue requirement.

(h) All telephone companies shall provide tandem-switched transport service.

(i) Except in the situations set forth in paragraphs (j) and (k) of this section, telephone companies may offer term and volume discounts in tandem-switched transport charges within each study area used for the purpose of jurisdictional separations, in which interconnectors have taken either:

(1) At least 100 DS1-equivalent cross-connects for the transmission of switched traffic (as described in §69.121(a)(1) of this chapter) in offices in the study area that the telephone company has assigned to the lowest priced density pricing zone (zone 1) under an approved density pricing zone plan as described in §§61.38(b)(4) and 61.49(k) of this chapter; or

(2) An average of at least 25 DS1-equivalent cross-connects for the transmission of switched traffic per office assigned to the lowest priced density pricing zone (zone 1).

(j) In study areas in which the telephone company has implemented density zone pricing, but no offices have been assigned to the lowest priced density pricing zone (zone 1), telephone companies may offer term and volume discounts in tandem-switched transport charges within the study area when interconnectors have taken at least 5 DS1-equivalent cross-connects for the transmission of switched traffic (as described in §69.121(a)(1) of this chapter) in offices in the study area.

(k) In study areas in which the telephone company has not implemented density zone pricing, telephone companies may offer term and volume discounts in tandem-switched transport charges when interconnectors have taken at least 100 DS1-equivalent cross-connects for the transmission of switched traffic (as described in §69.121(a)(1) of this chapter) in offices in the study area.

[57 FR 54720, Nov. 20, 1992, as amended at 58 FR 41190, Aug. 3, 1993; 58 FR 48764, Sept. 17, 1993; 60 FR 50121, Sept. 28, 1995]

§69.112 Direct-Trunked Transport.

(a) A flat-rated direct-trunked transport charge expressed in dollars and cents per unit of capacity shall be assessed upon all interexchange carriers and other persons that use telephone company direct-trunked transport facilities.

(b)(1) For telephone companies subject to price cap regulation, initial direct-trunked transport charges based on the interoffice charges for equivalent voice grade, DS1, and DS3 special access services as of September 1, 1992, adjusted for changes in the price cap index calculated for the July 1, 1993 annual filing for telephone companies subject to price cap regulation, generally shall be presumed reasonable if the benchmark defined in §69.108 is satisfied. Direct-trunked transport charges may be distance-sensitive. Distance shall be measured as airline kilometers between customer-designated points.

(2) For telephone companies not subject to price cap regulation, initial direct-trunked transport charges based

on the interoffice charges for equivalent voice grade, DS1, and DS3 special access services generally shall be presumed reasonable if the benchmark defined in § 69.108 is satisfied. Direct-trunked transport charges may be distance-sensitive. Distance shall be measured as airline kilometers between customer-designated points.

(c) If the telephone company employs distance-sensitive rates:

(1) A distance-sensitive component shall be assessed for use of the transmission facilities, including intermediate transmission circuit equipment, between the end points of the circuit; and

(2) A nondistance-sensitive component shall be assessed for use of the circuit equipment at the ends of the transmission links.

(d) Telephone companies shall apply only their shortest term special access rates in setting direct-trunked transport rates.

(e) Except as provided in pagagraphs (f), (g), and (h) of this section, telephone companies shall not offer direct-trunked transport rates based on term discounts or volume discounts for multiple DS3s or any other service with higher volume than DS3.

(f) Except in the situations set forth in paragraphs (g) and (h) of this section, telephone companies may offer term and volume discounts in direct-trunked transport charges within each study area used for the purpose of jurisdictional separations, in which interconnectors have taken either:

(1) At least 100 DS1-equivalent cross-connects for the transmission of switched traffic (as described in § 69.121(a)(1)) in offices in the study area that the telephone company has assigned to the lowest priced density pricing zone (zone 1) under an approved density pricing zone plan as described in §§ 61.38(b)(4) and 61.49(k) of this section; or

(2) An average of at least 25 DS1-equivalent cross-connects for the transmission of switched traffic per office assigned to the lowest priced density pricing zone (zone 1).

(g) In study areas in which the telephone company has implemented density zone pricing, but no offices have been assigned to the lowest priced density pricing zone (zone 1), telephone companies may offer term and volume discounts in direct-trunked transport charges within the study area when interconnectors have taken at least 5 DS1-equivalent cross-connects for the transmission of switched traffic (as described in § 69.121(a)(1) of this chapter) in offices in the study area.

(h) In study areas in which the telephone company has not implemented density zone pricing, telephone companies may offer term and volume discounts in direct-trunked transport charges when interconnectors have taken at least 100 DS1-equivalent cross-connects for the transmission of switched traffic (as described in § 69.121(a)(1) of this chapter) in offices in the study area.

(i) Centralized equal access providers as described in Transport Rate Structure and Pricing, CC Docket No. 91–213, FCC 92–442, 7 FCC Rcd 7002 (1992), are not required to provide direct-trunked transport service. Telephone companies that do not have measurement and billing capabilities at their end offices are not required to provide direct-trunked transport services at those end offices without measurement and billing capabilities. Telephone companies that are not classified as Class A companies under § 32.11 of this chapter are required to provide direct-trunked transport service upon request. All other telephone companies shall provide a direct-trunked transport service.

[57 FR 54720, Nov. 20, 1992, as amended at 58 FR 41190, Aug. 3, 1993; 58 FR 44950, Aug. 25, 1993; 58 FR 48764, Sept. 17, 1993; 60 FR 50121, Sept. 28, 1995]

§ 69.113 Non-premium charges for MTS–WATS equivalent services.

(a) Charges that are computed in accordance with this section shall be assessed upon interexchange carriers or other persons that receive access that is not deemed to be premium access as this term in defined in § 69.105(b)(1) in lieu of carrier charges that are computed in accordance with §§ 69.105, 69.106, 69.118, 69.124, and 69.127.

(b) The non-premium charge for the Carrier Common Line element shall be computed by multiplying the premium charge for such element by .45.

(c) For telephone companies that are not subject to price cap regulation as

that term is defined in §61.3(v) of this chapter, the non-premium charge for the Local Switching element shall be computed by multiplying a hypothetical premium charge for such element by .45. The hypothetical premium charge for such element shall be computed by dividing the annual revenue requirement for each element by the sum of the projected access minutes for such period and a number that is computed by multiplying the projected non-premium minutes for such element for such period by .45. For telephone companies that are price cap carriers, the non-premium charge for the Local Switching element shall be computed by multiplying the premium charge for such element by .45. Though June 30, 1993, the non-premium charge shall be computed by multiplying the LS2 charge for such element by .45.

(d) The non-premium charge or charges for the interconnection charge element shall be computed by multiplying the corresponding premium charge or charges by .45.

(e) The non-premium charge for any BSEs in local switching shall be computed by multiplying the premium charge for the corresponding BSEs by .45.

[54 FR 6293, Feb. 9, 1989, as amended at 55 FR 42386, Oct. 19, 1990; 55 FR 50559, Dec. 7, 1990; 56 FR 33881, July 24, 1991; 57 FR 54721, Nov. 20, 1992; 59 FR 10304, Mar. 4, 1994]

§69.114 Special access.

(a) Appropriate subelements shall be established for the use of equipment or facilities that are assigned to the Special Access element for purposes of apportioning net investment, or that are equivalent to such equipment or facilities for companies subject to price cap regulation as that term is defined in §61.3(v) of this chapter.

(b) Charges for all subelements shall be designed to produce total annual revenue that is equal to the projected annual revenue requirement for the Special Access element.

(c) Charges for an individual element shall be assessed upon all interexchange carriers that use the equipment or facilities that are included within such subelement.

(d) Charges for individual subelements shall be designed to reflect cost differences among subelements in a manner that complies with applicable Commission rules or decisions.

[48 FR 10358, Mar. 11, 1983, as amended at 48 FR 43019, Sept. 21, 1983. Redesignated at 54 FR 6293, Feb. 9, 1989, and amended at 55 FR 42386, Oct. 19, 1990]

§69.115 Special access surcharges.

(a) Pending the development of techniques accurately to measure usage of exchange facilities that are interconnected by users with means of interstate or foreign telecommunications, a surcharge that is expressed in dollars and cents per line termination per month shall be assessed upon users that subscribe to private line services or WATS services that are not exempt from assessment pursuant to paragraph (e) of this section.

(b) Such surcharge shall be computed to reflect a reasonable approximation of the carrier usage charges which, assuming non-premium interconnection, would have been paid for average interstate or foreign usage of common lines, end office facilities, and transport facilities, attributable to each Special Access line termination which is not exempt from assessment pursuant to paragraph (e) of this section.

(c) If the association, carrier or carriers that file the tariff are unable to estimate such average usage for a period ending May 31, 1985, the surcharge for such period shall be twenty-five dollars ($25) per line termination per month.

(d) A telephone company may propose reasonable and nondiscriminatory end user surcharges, to be filed in its federal access tariffs and to be applied to the use of exchange facilities which are interconected by users with means of interstate or foreign telecommunication which are not provided by the telephone company, and which are not exempt from assessment pursuant to paragraph (e) of this section. Telephone companies which wish to avail themselves of this option must undertake to use reasonable efforts to identify such means of interstate or foreign telecommunication, and to assess end user surcharges in a reasonable and nondiscriminatory manner.

(e) No special access surcharges shall be assessed for any of the following terminations:

(1) The open end termination in a telephone company switch of an FX line, including CCSA and CCSA-equivalent ONALs;

(2) Any termination of an analog channel that is used for radio or television program transmission;

(3) Any termination of a line that is used for telex service;

(4) Any termination of a line that by nature of its operating characteristics could not make use of common lines; and

(5) Any termination of a line that is subject to carrier usage charges pursuant to § 69.5.

(6) Any termination of a line that the customer certifies to the exchange carrier is not connected to a PBX or other device capable of interconnecting a local exchange subscriber line with the private line or WATS access line.

(47 U.S.C. 154 (i) and (j), 201, 202, 203, 205, 218 and 403 and 5 U.S.C. 553)

[48 FR 43019, Sept. 21, 1983, as amended at 49 FR 7829, Mar. 2, 1984; 51 FR 10841, Mar. 31, 1986; 52 FR 8259, Mar. 17, 1987]

§ 69.116 Universal service fund.

Effective August 1, 1988:

(a) A charge that is expressed in dollars and cents per line per month shall be assessed upon all interexchange carriers that use local exchange switching facilities for the provision of interstate or foreign telecommunications services and that have at least .05 percent of the total common lines presubscribed to interexchange carriers in all study areas.

(b) The charge shall be computed by the association on a semi-annual basis by dividing one-twelfth of the projected annual Universal Service Fund revenue requirement by the total number of common lines presubscribed to interexchange carriers defined in § 69.116(a). Beginning on April 1, 1989, the association shall bill and collect the charge, and disburse associated revenue, on a monthly basis pursuant to § 69.603(c).

(c) Telephone companies shall provide the association the data necessary to compute the charge. These data shall include the number of presubscribed common lines in each study area and the number of those lines associated with each interexchange carrier serving that study area. In a study area served by a single interexchange carrier, all common lines shall be considered as presubscribed to that interexchange carrier. Information concerning presubscribed common lines shall be filed with the association on June 30 and December 30 of each year, except for the first such submission, containing presubscribed common line data calculated as of December 31, 1987, which shall be filed on August 1, 1988. Presubscribed common line data filed on June 30 shall be calculated as of December 31 of the preceding year, and presubscribed common line data filed on December 30 shall be calculated as of June 30 of the same year.

[53 FR 28396, July 28, 1988, as amended at 54 FR 50624, Dec. 8, 1989]

§ 69.117 Lifeline assistance.

Effective August 1, 1988:

(a) A charge that is expressed in dollars and cents per line per month shall be assessed upon all interexchange carriers that use local exchange switching facilities for the provision of interstate or foreign telecommunications services and that have at least .05 percent of the total common lines presubscribed to interexchange carriers in all study areas.

(b) The charge shall be computed by the association on a semi-annual basis by dividing the sum of one-twelfth of the projected annual Lifeline Assistance revenue requirement and one-twelfth of the projected annual revenue requirement calculated by all telephone companies pursuant to § 69.104(l) by the number of common lines presubscribed to interexchange carriers defined in § 69.117(a). Beginning on April 1, 1989, the association shall bill and collect the charge, and disburse associated revenue, on a monthly basis pursuant to § 69.603(d).

(c) Telephone companies shall provide to the association the data necessary to compute the charge. These data shall include the number of presubscribed common lines in each study area and the number of those

lines associated with each interexchange carrier serving that study area. In a study area served by a single interexchange carrier, all common lines shall be considered as presubscribed to that interexchange carrier. Information concerning presubscribed common lines shall be filed with the association on June 30 and December 30 of each year, except for the first such submission, containing presubscribed common line data calculated as of December 31, 1987, which shall be filed on August 1, 1988. Presubscribed common line data filed on June 30 shall be calculated as of December 31 of the preceding year, and presubscribed common line data filed on December 30 shall be calculated as of June 30 of the same year.

[53 FR 28396, July 28, 1988, as amended at 54 FR 50624, Dec. 8, 1989]

§69.118 Traffic sensitive switched services.

Notwithstanding §§69.4(b), 69.106, 69.109, 69.110, 69.111, 69.112, and 69.124, telephone companies subject to the BOC ONA Order, 4 FCC Rcd 1 (1988) shall, and other telephone companies may, establish approved Basic Service Elements as provided in Amendments of part 69 of the Commission's rules relating to the Creation of Access Charge Subelements for Open Network Architecture, Report and Order, 6 FCC Rcd 4524 (1991) and 800 data base subelements, as provided in Provision of Access for 800 Service, 8 FCC Rcd _____, CC Docket 86–10, FCC 93–53 (1993). Moreover, all customers that use basic 800 database service shall be assessed a charge that is expressed in dollars and cents per query. Telephone companies shall take into account revenues from the relevant Basic Service Element or Elements and 800 Database Service Elements in computing rates for the Local Switching, Entrance Facilities, Tandem-Switched Transport, Direct-Trunked Transport, Interconnection Charge, and/or Information elements.

[58 FR 7868, Feb. 10, 1993]

§69.119 Basic service element expedited approval process.

The rules for filing comments and reply comments on requests for expedited approval of new basic service elements are those indicated in §1.45 of the rules, except as specified otherwise.

[56 FR 33881, July 24, 1991]

§69.120 Line information database.

(a) A charge that is expressed in dollars and cents per query shall be assessed upon all carriers that access validation information from a local exchange carrier database to recover the costs of:

(1) The transmission facilities between the local exchange carrier's signalling transfer point and the database; and

(2) The signalling transfer point facilities dedicated to the termination of the transmission facilities connecting the database to the exchange carrier's signalling network.

(b) A charge that is expressed in dollars and cents per query shall be assessed upon all carriers that access validation information from a local exchange carrier line information database to recover the costs of the database.

[57 FR 24380, June 9, 1992]

§69.121 Connection charges for expanded interconnection.

(a) Appropriate connection charge subelements shall be established for the use of equipment and facilities that are associated with offerings of expanded interconnection for special access and switched transport services, as defined in part 64, subpart N of this chapter. To the extent that the same equipment and facilities are used to provide expanded interconnection for both special access and switched transport, the same connection charge subelements shall be used.

(1) A cross-connect subelement shall be established for charges associated with the cross-connect cable and associated facilities connecting the equipment owned by or dedicated to the use of the interconnector with the telephone company's equipment and facilities used to provide interstate special or switched access services. Charges for the cross-connect subelement shall not be deaveraged within a study area that is used for purposes of jurisdictional separations.

(2) Charges for subelements associated with physical collocation or virtual collocation, other than the subelement described in paragraph (a)(1) of this section and subelements recovering the cost of the virtual collocation equipment described in § 64.1401(e)(1) of this chapter, may reasonably differ in different central offices, notwithstanding § 69.3(e)(7).

(b) Connection charge subelements shall be computed based upon the costs associated with the equipment and facilities that are included in such subelements, including no more than a just and reasonable portion of the telephone company's overhead costs.

(c) Connection charge subelements shall be assessed upon all interconnectors that use the equipment or facilities that are included in such subelements.

[57 FR 54332, Nov. 18, 1992, as amended by 58 FR 48764, Sept. 17, 1993; 59 FR 38930, Aug. 1, 1994]

§ 69.122 Contribution charges for special access and expanded interconnection.

(a) Any contribution charge that the Commission may, by order, permit shall be calculated in a manner that complies with the Commission order authorizing the contribution charge.

(b) Any contribution charge shall be assessed on a per unit of capacity basis, upon parties that use expanded interconnection for special access and upon customers of similar special access services offered by the telephone company.

[57 FR 54332, Nov. 18, 1992]

§ 69.123 Density pricing zones for special access and switched transport.

(a) Telephone companies may establish a reasonable number of density pricing zones within each study area that is used for the purposes of jurisdictional separations, in which at least one interconnector has taken the subelement of connection charges for expanded interconnection described in § 69.121(a)(1) of this chapter. Only one set of density pricing zones shall be established within each study area, to be used for the pricing of both special and switched access pursuant to paragraphs (c) and (d) of this section.

(b) Such a system of pricing zones shall be designed to reasonably reflect cost-related characteristics, such as the density of total interstate traffic in central offices located in the respective zones.

(c) Notwithstanding § 69.3(e)(7) of this chapter, in study areas in which at least one interconnector has taken a cross-connect, as described in § 69.121(a)(1) of this chapter, for the transmission of interstate special access traffic, telephone companies may charge rates for special access subelements of DS1, DS3, and such other special access services as the Commission may designate, that differ depending on the zone in which the service is offered, provided that the charges for any such service shall not be deaveraged within any such zone.

(1) A special access service subelement shall be deemed to be offered in the zone that contains the telephone company location from which the service is provided.

(2) A special access service subelement provided to a customer between telephone company locations shall be deemed to be offered in the highest priced zone that contains one of the locations between which the service is offered.

(d) Notwithstanding § 69.3(e)(7) of this chapter, in study areas in which at least one interconnector has taken a cross-connect, as described in § 69.121(a)(1) of this chapter, for the transmission of interstate switched traffic, or is using collocated facilities to interconnect with telephone company interstate switched transport services, telephone companies may charge rates for subelements of direct-trunked transport, tandem-switched transport, entrance facilities, and dedicated signalling transport that differ depending on the zone in which the service is offered, provided that the charge for any such service shall not be deaveraged within any such zone. Telephone companies may not, however, charge rates for the interconnection charge that differ depending on the zone in which the service is offered.

(1) A switched transport service subelement shall be deemed to be offered in the zone that contains the telephone

company location from which the service is provided.

(2) A switched transport service subelement provided to a customer between telephone company locations shall be deemed to be offered in the highest priced zone that contains either of the locations between which the service is offered.

(e)(1) Telephone companies not subject to price cap regulation may charge a rate for each service in the highest priced zone that exceeds the rate for the same service in the lowest priced zone by no more than fifteen percent of the rate for the service in the lowest priced zone during the period from the date that the zones are initially established through the following June 30. The difference between the rates for any such service in the highest priced zone and the lowest priced zone in a study area, measured as a percentage of the rate for the service in the lowest priced zone, may increase by no more than an additional fifteen percentage points in each succeeding year, measured from the rate differential in effect on the last day of the preceding tariff year.

(2) Telephone companies subject to price cap regulation may charge different rates for services in different zones pursuant to §61.47(h) of this chapter.

[57 FR 54333, Nov. 18, 1992, as amended by 58 FR 48764, Sept. 17, 1993]

§69.124 Interconnection charge.

(a) An interconnection charge expressed in dollars and cents per access minute shall be assessed upon all interexchange carriers and upon all other persons interconnecting with the telephone company switched access network.

(b)(1) For telephone companies not subject to price cap regulation, the interconnection charge shall be computed by subtracting entrance facilities, tandem-switched transport, direct-trunked transport, and dedicated signalling transport revenues from the part 69 transport revenue requirement, and dividing by the total interstate local switching minutes.

(2) For telephone companies subject to price cap regulation, the interconnection charge shall be set initially to comply with the price cap rate restructure requirement of revenue neutrality.

[57 FR 54721, Nov. 20, 1992, as amended at 58 FR 41190 and 41191, Aug. 3, 1993; 58 FR 45267, Aug. 27, 1993]

§69.125 Dedicated signalling transport.

(a) Dedicated signalling transport shall consist of two subelements, a signalling link charge and a signalling transfer point (STP) port termination charge.

(b)(1) A flat-rated signalling link charge expressed in dollars and cents per unit of capacity shall be assessed upon all interexchange carriers and other persons that use facilities between an interexchange carrier or other person's common channel signalling network and a telephone company signalling transfer point or equivalent facilities offered by a telephone company. Signalling link charges may be distance-sensitive. Distance shall be measured as airline kilometers between the signalling point of interconnection of the interexchange carrier's or other person's common channel signalling network and the telephone company's signalling transfer point.

(2) Signalling link rates will generally be presumed reasonable if they are based on the interoffice charges for equivalent special access services. Telephone companies that have, before February 18, 1993, tariffed a signalling link service for signalling transport between the interexchange carrier's or other person's common channel signalling network and the telephone company's STP are permitted to use the rates that are in place.

(c) A flat-rated STP port termination charge expressed in dollars and cents per port shall be assessed upon all interexchange carriers and other persons that use dedicated signalling transport.

[57 FR 54721, Nov. 20, 1992, as amended at 58 FR 41191, Aug. 3, 1993; 58 FR 44950, Aug. 25, 1993]

§69.126 Nonrecurring charges.

As of the effective date of the Report and Order in Transport Rate Structure

and Pricing, CC Docket No. 91–213, FCC 92–442, 7 FCC Rcd 7006 (1992), telephone companies shall not assess any nonrecurring charges for service connection until six months after the effective date of the tariffs introducing initial transport rates, when an interexchange carrier converts trunks from tandem-switched transport to direct-trunked transport or from direct-trunked transport to tandem-switched transport, or when an interexchange carrier orders the disconnection of overprovisioned trunks.

[57 FR 54721, Nov. 20, 1992, as amended at 59 FR 10304, Mar. 4, 1994]

§ 69.127 Transitional Equal Charge Rule.

The transport rate structure in effect August 1, 1991, shall be retained until the tariffs filed pursuant to the Report and Order in Transport Rate Structure and Pricing, CC Docket No. 91–213, FCC 92–442, 7 FCC Rcd 7006 (1992) become effective.

[57 FR 54722, Nov. 20, 1992]

§ 69.128 Billing name and address.

Appropriate subelements shall be established for the use of equipment or facilities that are associated with offerings of billing name and address.

[58 FR 36145, July 6, 1993]

§ 69.129 Signalling for tandem switching.

A charge that is expressed in dollars and cents shall be assessed upon the purchasing entity by a local telephone company for provision of signalling for tandem switching.

[59 FR 32930, June 27, 1994]

Subpart C—Computation of Transition Charges

§ 69.201 General.

Notwithstanding §§ 69.4, 69.104, 69.106, and 69.111 through 69.112, charges for the access elements described in this subpart shall be computed in accordance with this subpart during the period commencing January 1, 1984 and ending December 31, 1992. This subpart does not supersede § 69.106 (c) through (e).

[54 FR 6293, Feb. 9, 1989]

§ 69.203 Transitional end user common line charges.

(a) Except as provided in §§ 69.104 and 69.204, the End User Common Line charge for single line business subscribers, single line residential subscribers, and multi-line residential subscribers shall be the lesser of the charge computed in § 69.104(c) or $2 per line per month until June 30, 1987; $2.60 per line per month during the period from July 1, 1987 through November 30, 1988; $3.20 per line per month during the period from December 1, 1988 through March 31, 1989; and $3.50 per month thereafter.

(b) The End User Common Line charge for each subscriber line used for Centrex-CO service that was in place or on order as of July 27, 1983, shall be the lesser of the charge computed in § 69.104(c) of $3 per line per month until June 30, 1987; $4 per line per month during the period from July 1, 1987 through November 30, 1988; $5 per line per month for the period from December 1, 1988 through March 31, 1989; and $6 per line per month thereafter.

(c) No charge shall be assessed for any WATS access line.

(d) Except as provided in paragraphs (f) and (g), the End User Common Line charge for single line and multi-line residential subscribers shall be $1 per month per line during the June 1, 1985—May 31, 1986 period and $2 per month per line after May 31, 1986.

(e) The End User Common Line charge for each multi-party subscriber shall be assessed as if such subscriber had subscribed to single-party service.

(f) The End User Common Line charge for a residential subscriber shall be 50% of the charge specified in paragraphs (d) and (e) if the residential local exchange rate for such subscribers is reduced by an equivalent amount, provided that such local exchange service rate reduction is based upon a means test that is subject to verification.

(g)(1) The End User Common Line charge for residential subscribers shall be reduced to the extent of the state assistance as calculated in paragraph (g)(2) of this section, or waived in full

if the state assistance equals or exceeds the residential End User Common Line Charge under the circumstances described below. In order to qualify for this waiver, the subscriber must be eligible for and receive assistance or benefits provided pursuant to a narrowly targeted telephone lifeline assistance plan requiring verification of eligibility, implemented by the state or local telephone company. A state or local telephone company wishing to implement this End User Common Line reduction or waiver for its subscribers shall file information with the Commission Secretary demonstrating that its plan meets the criteria set out in this section, and showing the amount of state assistance per subscriber as described in paragraph (g)(2) of this section. The reduction or waiver of the End User Common Line Charge shall be available as soon as the Commission certifies that the state or local telephone plan satisfies the criteria set out in this subsection, and the relevant tariff provisions become effective.

(2)(i) The state assistance per subscriber shall be equal to the difference between the charges to be paid by participating subscribers and those to be paid by other subscribers for comparable monthly local exchange service, service connections and customer deposits, except that benefits or assistance for connection charges and deposit requirements may only be counted once annually. In order to be included in calculating the state assistance, such benefits must be for a single telephone line to the household's principal residence.

(ii) The monthly state assistance per participating subscriber shall be calculated by adding the amounts calculated in paragraphs (g)(2)(ii) (A) and (B) of this section.

(A) The amount of the monthly state assistance per participating subscriber for local exchange service charges shall be calculated by dividing the annual difference between the charges paid by all participating subscribers for residential local exchange service and the amount which would have been charged to non-qualifying subscribers for comparable service by twelve times the number of subscribers participating in the state assistance program. Estimates may be used when historic data is not available.

(B) The amount of the monthly state assistance for service connections and customer deposits per participating subscriber shall be calculated by determining the annual amount of the reductions in these charges for participating subscribers each year, and dividing this amount by twelve times the number of participating subscribers. Estimates may be used when historic data is not available.

(h) No charge shall be assessed for any WATS access line.

[50 FR 944, Jan. 8, 1985, as amended at 50 FR 9636, Mar. 11, 1985; 51 FR 1374, Jan. 13, 1986; 51 FR 10841, Mar. 31, 1986; 51 FR 15003, Apr. 22, 1986; 52 FR 21542, June 8, 1987]

§69.204 Optional alternative carrier common line tariff provisions.

(a) A telephone company that files a concurrence described in subsection (c) of this section may file Optional Alternative Carrier Common Line tariff provisions for a particular study area to encourage use of telephone company access service facilities by interexchange carriers and large volume users. Such tariff provisions shall be designed to ensure that large volume users of interstate or foreign telecommunications services in such study area will receive the benefit of any reduction in Carrier Common Line charges. These tariff provisions shall be filed on a minimum of 90 days notice.

(b) A telephone company that files an Optional Alternative Carrier Common charge may file a surcharge upon End User Common Line charges, to be effective on a minimum of 90 days notice, if

(1) A uniform surcharge is imposed upon all monthly End User Common Line charges in such study area;

(2) The monthly surcharge does not exceed 35 cents; and

(3) Such surcharge revenues are not likely to exceed the difference between the annual revenues that would have been produced by the association Carrier Common Line charge and the annual revenues that will be produced by the Optional Alternative Carrier Common Line tariff provisions.

(c) A concurrence may be issued by a public utility commission that regulates intrastate telecommunications services in the relevant area or by the CC Docket 80–286 Joint Board. A telephone company may request a concurrence from the CC Docket 80–286 Joint Board if, but only if, the appropriate public utility commission declines to issue a concurrence or fails to act upon a request for a concurrence within 60 days after such request has been filed. A concurrence shall signify that a majority of such commission or Joint Board agree that the Optional Alternative Carrier Common Line tariff provisions are warranted to deter bypass in the affected area and that any End User Common Line surcharge is not likely to impair universal service in the affected area.

[50 FR 944, Jan. 8, 1985]

§ 69.205 Transitional premium charges.

(a) Charges that are computed in accordance with this section shall be asessed upon interexchange carriers or other persons that receive premium access in lieu of carrier charges that are computed in accordance with §§ 69.106, 69.111, 69.112, and 69.118 of this part if any carrier or other person does not receive premium access, as this term is defined in § 69.105.

(b) Separate Local Switching transitional premium charges that are expressed in dollars and cents per access minute shall be computed for the LS1 and LS2 categories. The LS1 category shall consist of local dial switching for services other than MTS, WATS and services receiving access to the local switch equal to that received by MTS and WATS. The LS2 category shall consist of local dial switching for MTS, WATS and services receiving access to the local switch equal to that received by MTS and WATS.

(c) Except for telephone companies subject to price cap regulation, as that term is defined in § 61.3(v) of this chapter, the charge for an LS2 premium access minute shall be computed by dividing the premium Local Switching revenue requirement by the sum of the projected LS2 premium access minutes and a number that is computed by multiplying the projected LS1 premium access minutes by the applicable LS1 transition factor. For all telephone companies, the charge for an LS1 premium access minute shall be computed by multiplying the charge for an LS2 premium minute by the applicable LS1 transition factor. For telephone companies that are not subject to price cap regulation, as that term is defined in § 61.3(v) of this chapter, the premium Local Switching revenue requirement shall be computed by subtracting the projected revenues from non-premium charges attributable to the Local Switching element from the revenue requirement for each element.

(d) During each of the following years the LS1 transition factor shall be:

(1) January 1, 1988 through March 31, 1989—.78;

(2) April 1, 1989 through June 30, 1990—.86;

(3) July 1, 1990 through June 30, 1991—.905;

(4) July 1, 1990 through June 30, 1992—.955; and

(5) July 1, 1992 through December 31, 1992—.98

(e) Transitional premium charges that are computed in accordance with applicable requirements shall be assessed for the Transport element or elements. Such premium charges shall be designed to produce total annual revenue that is equal to the premium transport revenue requirement. The premium transport revenue requirement shall be computed by subtracting projected revenues from non-premium charges attributable to the Transport element or elements from the revenue requirement for such element or elements.

[54 FR 6293, Feb. 9, 1989, as amended at 55 FR 42387, Oct. 19, 1990; 55 FR 50559, Dec. 7, 1990; 56 FR 33881, July 24, 1991]

§ 69.209 Annual 1989 access tariff filings.

Notwithstanding § 69.3, tariffs for access service shall be filed to be effective April 1, 1989 for a period extending through June 30, 1990. Such tariffs shall be filed so as to provide a minimum of 90 days notice.

[55 FR 6990, Feb. 28, 1990]

Subpart D—Apportionment of Net Investment

SOURCE: 52 FR 37312, Oct. 6, 1987, unless otherwise noted.

§69.301 General.

(a) For purposes of computing annual revenue requirements for access elements net investment as defined in §69.2 (z) shall be apportioned among the interexchange category, the billing and collection category and access elements as provided in this subpart. For purposes of this subpart, local transport includes five elements: entrance facilities, direct-trunked transport, tandem-switched transport, dedicated signaling transport, and the interconnection charge. Expenses shall be apportioned as provided in subpart E of this part.

(b) The End User Common Line and Carrier Common Line elements shall be combined for purposes of this subpart and subpart E of this part. Those elements shall be described collectively as the Common Line element. The Common Line element revenue requirement shall be segregated in accordance with subpart F of this part.

[52 FR 37312, Oct. 6, 1987, as amended at 57 FR 54722, Nov. 20, 1992]

§69.302 Net investment.

(a) Investment in Accounts 2001, 1220 and Class B Rural Telephone Bank Stock booked in Account 1402 shall be apportioned among the interexchange category, billing and collection category and appropriate access elements as provided in §§69.303 through 69.309.

(b) Investment in Accounts 2002, 2003 and to the extent such inclusions are allowed by this Commission, Account 2005 shall be apportioned on the basis of the total investment in Account 2001, Telecommunications Plant in Service.

[52 FR 37312, Oct. 6, 1987, as amended at 54 FR 3456, Jan. 24, 1989]

§69.303 Information origination/termination equipment (IOT).

(a) Investment in public telephones and appurtenances shall be assigned to the Common Line element, if capable of use with the services of more than one interexchange carrier, or the Limited Pay Telephone element, if capable of use with the services of only one interexchange carrier.

(b) Investment in all other IOT shall be apportioned between the Special Access and Common Line elements on the basis of the relative number of equivalent lines in use, as provided herein. Each interstate or foreign Special Access Line, excluding lines designated in §69.115(e), shall be counted as one or more equivalent lines where channels are of higher than voice bandwidth, and the number of equivalent lines shall equal the number of voice capacity analog or digital channels to which the higher capacity is equivalent. Local exchange subscriber lines shall be multiplied by the interstate Subscriber Plant Factor to determine the number of equivalent local exchange subscriber lines.

§69.304 Subscriber line cable and wire facilities.

(a) Investment in local exchange subscriber lines shall be assigned to the Common Line element.

(b) Investment in interstate and foreign private lines and interstate WATS access lines shall be assigned to the Special access element.

(c) Investment in lines terminating in public telephones which may only access the services of one interexchange carrier (or partnership) shall be assigned to the Limited Pay Telephone element. Investment in all other lines terminating in public telephones shall be assigned to the Common Line element.

§69.305 Carrier cable and wire facilities (C&WF).

(a) Carrier C&WF that is not used for ''origination'' or ''termination'' as defined in §69.2(bb) and §69.2(cc) shall be assigned to the interexchange category.

(b) Carrier C&WF, other than WATS access lines, not assigned pursuant to paragraph (a) or (c) of this section that is used for interexchange services that use switching facilities for origination and termination that are also used for local exchange telephone service shall be apportioned to the Transport elements.

(c) Carrier C&WF that is used to provide transmission between the local exchange carrier's signalling transfer point and the database shall be assigned to the Line Information Database sub-element at § 69.120(a).

(d) All Carrier C&WF that is not apportioned pursuant to paragraphs (a), (b), and (c) of this section shall be assigned to the Special Access element.

[52 FR 37312, Oct. 6, 1987, as amended at 57 FR 24380, June 9, 1992; 58 FR 30995, May 28, 1993]

§ 69.306 Central office equipment (COE).

(a) The Separations Manual categories shall be used for purposes of apportioning investment in such equipment except that any Central office equipment attributable to local transport shall be assigned to the Transport elements.

(b) COE Category 1 (Operator Systems Equipment) shall be apportioned among the interexchange category and the access elements as follows: Category 1 that is used for intercept services shall be assigned to the Local Switching element. Category 1 that is used for directory assistance shall be assigned to the Information element. Category 1 other than service observation boards that is not assigned to the Information element and is not used for intercept services shall be assigned to the interexchange category. Service observation boards shall be apportioned among the interexchange category, and the Information and Transport access elements based on the remaining combined investment in COE Category 1, Category 2 and Category 3.

(c) COE Category 2 (Tandem Switching Equipment) that is deemed to be exchange equipment for purposes of the Modification of Final Judgment in *United States* v. *Western Electric Co.* shall be assigned to the tandem switching charge subelement and the interconnection charge element. COE Category 2 which is used to provide transmission facilities between the local exchange carrier's signalling transfer point and the database shall be assigned to the Line Information Database subelement at § 69.120(a). All other COE Category 2 shall be assigned to the interexchange category.

(d) COE Category 3 (Local Switching Equipment) shall be assigned to the Local Switching element except as provided in paragraph (a) of this section.

(e) COE Category 4 (Circuit Equipment) shall be apportioned among the interexchange category, and the Common Line, Limited Pay Telephone, Transport, and Special Access elements. COE Category 4 shall be apportioned in the same proportions as the associated Cable and Wire Facilities.

[52 FR 37312, Oct. 6, 1987, as amended at 57 FR 54722, Nov. 20, 1992; 58 FR 30995, May 28, 1993]

§ 69.307 General support facilities.

(a) General purpose computer investment used in the provision of the Line Information Database sub-element at § 69.120(b) shall be assigned to that subelement.

(b) General purpose computer investment used in the provision of the billing name and address element at § 69.128 shall be assigned to that element.

(c) All other General Support Facilities investments shall be apportioned among the interexchange category, the billing and collection category, and Common Line, Limited Pay Telephone, Local Switching, Information, Transport, and Special Access elements on the basis of Central Office Equipment, Information Origination/Termination Equipment, and Cable and Wire Facilities, combined.

[58 FR 30995, May 28, 1993, as amended at 58 FR 36145, July 6, 1993]

§ 69.308 Equal access equipment.

Equal Access investment shall be assigned to the Local Switching element unless the telephone company chooses to implement a separate Equal Access element as provided in § 69.4(d) in which case Equal Access investment shall be assigned to the Equal Access element.

[54 FR 11718, Mar. 22, 1989]

§ 69.309 Other investment.

Investment that is not apportioned pursuant to §§ 69.302 through 69.308 shall be apportioned among the interexchange category, the billing and collection category, and access elements

in the same proportions as the combined investment that is apportioned pursuant to §§69.303 through 69.308.

§69.310 Capital leases.

Capital Leases in Account 2680 shall be directly assigned to the appropriate interexchange category or access elements consistent with the treatment prescribed for similar plant costs or shall be apportioned in the same manner as Account 2001.

Subpart E—Apportionment of Expenses

SOURCE: 52 FR 37313, Oct. 6, 1987, unless otherwise noted.

§69.401 Direct expenses.

(a) Plant Specific Operations Expenses in Accounts 6110 and 6120 shall be apportioned among the interexchange category, the billing and collection category and appropriate access elements on the following basis:

(1) Account 6110—Apportion on the basis of other investment apportioned pursuant to §69.309.

(2) Account 6120—Apportion on the basis of General and Support Facilities investment pursuant to §69.307.

(b) Plant Specific Operations Expenses in Accounts 6210, 6220 and 6230 shall be apportioned among the interchange category and access elements on the basis of the apportionment of the total COE investment.

(c) Plant Specific Operations Expenses in Accounts 6310 and 6410 shall be assigned to the appropriate investment category and shall be apportioned among the interexchange category and access elements in the same proportions as the total associated investment.

(d) Plant Non Specific Operations Expenses in Accounts 6510 and 6530 shall be apportioned among the interchange category, the billing and collection category, and access elements in the same proportions as the combined investment in COE, IOT, and C&WF apportioned to each element and category.

(e) Plant Non Specific Operations Expenses in Account 6540 shall be assigned to the interexchange category.

(f) Plant Non Specific Operations Expenses in Account 6560 shall be apportioned among the interexchange category, the billing and collection category, and access elements in the same proportion as the associated investment.

(g) Amortization of embedded customer premises wiring investment shall be deemed to be associated with §69.303(b) IOT investment for purposes of the apportionment described in paragraph (c) of this section.

§69.402 Operating taxes (Account 7200).

(a) Federal income taxes, state and local income taxes, and state and local gross receipts or gross earnings taxes that are collected in lieu of a corporate income tax shall be apportioned among the interexchange category, the billing and collection category and all access elements based on the approximate net taxable income on which the tax is levied (positive or negative) applicable to each element and category.

(b) All other operating taxes shall be apportioned among the interexchange category, the billing and collection category and all access elements in the same manner as the investment apportioned to each element and category pursuant to §69.309 Other Investment.

§69.403 Marketing expense (Account 6610).

Marketing expense shall be apportioned among the interexchange category and all access elements in the same proportions as the combined investment that is apportioned pursuant to §69.309.

§69.404 Telephone operator services expenses in Account 6620.

Telephone Operator Services expenses shall be apportioned among the interexchange category, and the Local Switching and Information elements based on the relative number of weighted standard work seconds. For those companies who contract with another company for the provision of these services, the expenses incurred shall be directly assigned among the interexchange category and the Local Switching and Information elements

on the basis of the bill rendered for the services provided.

§ 69.405 Published directory expenses in Account 6620.

Published Directory expenses shall be assigned to the Information element.

§ 69.406 Local business office expenses in Account 6620.

(a) Local business office expenses shall be assigned as follows:

(1) End user service order processing expenses attributable to presubscription shall be apportioned among the Common Line, Switching, and Transport elements in the same proportion as the investment apportioned to those elements pursuant to § 69.309.

(2) End user service order processing, payment and collection, and billing inquiry expenses attributable to the company's own interstate private line and special access service shall be assigned to the Special Access element.

(3) End user service order processing, payment and collection, and billing inquiry expenses attributable to interstate private line service offered by an interexhange carrier shall be assigned to the billing and collection category.

(4) End user service order processing, payment and collection, and billing inquiry expenses attributable to the company's own interstate message toll service shall be assigned to the interexchange category. End user service order processing, payment and collection, and billing inquiry expenses attributable to interstate message toll service offered by an interexchange carrier shall be assigned to the billing and collection category. End user payment and collection and billing inquiry expenses attributable to End User Common Line access billing shall be assigned to the Common Line element.

(5) End user service order processing, payment and collection, and billing inquiry expenses attributable to TWX service shall be assigned to the Special Access element.

(6) Interexchange carrier service order processing, payment and collection, and billing inquiry expenses attributable to private lines and special access shall be assigned to the Special Access element.

(7) Interexchange carrier service order processing, payment and collection, and billing inquiry expenses attributable to interstate switched access and message toll, shall be apportioned among the Common Line, Local Switching and Transport elements in the same proportion as the investment apportioned to those elements pursuant to § 69.309.

(8) Interexchange carrier service order processing, payment and collection, and billing inquiry expenses attributable to billing and collection service shall be assigned to the billing and collection category.

(9) Coin collection and administration expenses shall be divided between limited and non-limited public telephones. Coin collection and administration expenses attributable to limited public telephones shall be assigned to the Limited Pay Telephone element. Coin collection and administration expenses attributable to non-limited public telephone shall be assigned to the Common Line element.

§ 69.407 Revenue accounting expenses in Account 6620.

(a) Revenue accounting expenses that are attributable to End User Common Line access billings shall be assigned to the Common Line element.

(b) Revenue Accounting Expenses that are attributable to carrier's carrier access billing and collecting expense shall be apportioned among all carrier's carrier access elements except the Common Line element. Such expenses shall be apportioned in the same proportion as the combined investment in COE, C&WF and IOT apportioned to those elements.

(c) Revenue Accounting Expenses allocated to the interstate jurisdiction that are attributable to the provision of billing name and address information shall be assigned to the Billing Name and Address element.

(d) All other Revenue Accounting Expenses shall be assigned to the billing and collection category.

[52 FR 37313, Oct. 6, 1987, as amended at 58 FR 65671, Dec. 16, 1993]

§69.408 All other customer services expense in Account 6620.

All other customer services expenses shall be apportioned among the Interexchange category, the billing and collection category and all access elements based on the combined expenses in §§69.404 through 69.407.

[52 FR 37313, Oct. 6, 1987, as amended at 54 FR 3456, Jan. 24, 1989]

§69.409 Corporate operations expenses (Accounts 6710 and 6720).

All corporate operations expenses shall be apportioned among the interexchange category, the billing and collection category and all access elements in accordance with the Big 3 Expense Factor as defined in §69.2(f).

§69.410 Equal access expenses.

Equal Access expenses shall be assigned to the Local Switching element unless the telephone company chooses to implement a separate Equal Access element as provided in §69.4(d) in which case Equal Access expenses shall be assigned to the Equal Access element.

[54 FR 11718, Mar. 22, 1989]

§69.411 Other expenses.

Except as provided §§69.412, 69.413, and 69.414, expenses that are not apportioned pursuant to §§69.401 through 69.410 shall be apportioned among the interexchange category and all access elements in the same manner as §69.309 Other investment.

§69.412 Non participating company payments/receipts.

For telephone companies that are not association Common Line tariff participants, the payment or receipt of funds described in §69.612(a) and (b) shall be apportioned, respectively, as an addition to or a deduction from their common line revenue requirement.

§69.413 Universal service fund expenses.

Expenses allocated to the interstate jurisdiction pursuant to §§36.631 and 36.641 shall be assigned to the Carrier Common Line Element until March 31, 1989. Beginning April 1, 1989, such expenses shall be assigned to the Universal Service Fund Element.

§69.414 Lifeline assistance expenses.

Expenses allocated to the interstate jurisdiction pursuant to §36.741 shall be assigned to the Carrier Common Line element until March 31, 1989. Beginning April 1, 1989, such expenses shall be assigned to the Lifeline Assistance element.

Subpart F—Segregation of Common Line Element Revenue Requirement

§69.501 General.

(a) Any portion of the Common Line element annual revenue requirement that is attributable to long term support or transitional support shall be assigned to the Carrier Common Line element.

(b) Any portion of the Common Line element annual revenue requirement that is attributable to CPE investment or expense or surrogate CPE investment or expense shall be assigned to the Carrier Common Line element or elements.

(c) Any portion of the Common Line element annual revenue requirement that is attributable to customer premises wiring included in IOT investment or expense shall be assigned to the Carrier Common Line element or elements.

(d) Any portion of the Common Line element revenue requirement that is attributable to public telephone investment or expense shall be assigned to the Carrier Common Line element or elements.

(e) Any portion of the Common Line element revenue requirement that is not assigned to Carrier Common Line elements pursuant to paragraphs (a), (b), (c) and (d) of this section shall be apportioned between End User Common Line and Carrier Common Line pursuant to §69.502. Such portion of the Common Line element annual revenue requirement shall be described as the base factor portion for purposes of this subpart.

[48 FR 10358, Mar. 11, 1983, as amended at 50 FR 18262, Apr. 30, 1985; 52 FR 21542, June 8, 1987; 52 FR 37314, Oct. 6, 1987]

§ 69.502 Base factor allocation.

The projected revenues from the End User Common Line charges and Special Access surcharges shall be deducted from the base factor portion to determine the amount that is assigned to the Carrier Common Line element. End User Common Line charges that are waived pursuant to § 69.104 (j) and (k) shall be included in projected End User Common Line revenues for purposes of this computation.

[52 FR 21542, June 8, 1987]

Subpart G—Exchange Carrier Association

§ 69.601 Exchange carrier association.

(a) An association shall be established in order to prepare and file access charge tariffs on behalf of all telephone companies that do not file separate tariffs or concur in a joint access tariff of another telephone company for all access elements.

(b) All telephone companies that participate in the distribution of Carrier Common Line revenue requirement, pay long term support to association Common Line tariff participants, or receive payments from the transitional support fund administered by the association shall be deemed to be members of the association.

(c) All data submissions to the association required by this title shall be accompanied by the following certification statement signed by the officer or employee responsible for the overall preparation for the data submission:

CERTIFICATION

I am (title of certifying officer or employee). I hereby certify that I have overall responsibility for the preparation of all data in the attached data submission for (name of carrier) and that I am authorized to execute this certification. Based on information known to me or provided to me by employees responsible for the preparation of the data in this submission, I hereby certify that the data have been examined and reviewed and are complete, accurate, and consistent with the rules of the Federal Communications Commission.

Date: _____

Name: _____

Title: _____

(Persons making willful false statements in this data submission can be punished by fine or imprisonment under the provisions of the U.S. Code, Title 18, Section 1001).

[48 FR 10358, Mar. 11, 1983, as amended at 52 FR 21542, June 8, 1987; 60 FR 19530, Apr. 19, 1995]

§ 69.602 Board of directors.

(a) For purposes of this section, the association membership shall be divided into three subsets:

(1) The first subset shall consist of the telephone companies owned and operated by the seven Regional Bell Holding Companies;

(2) The second subset shall consist of all other telephone companies with annual operating revenues in excess of forty million dollars;

(3) The third subset shall consist of all other telephone companies. All commonly controlled companies shall be deemed to be one company for purposes of this section.

(b) There shall be fifteen directors of the association.

(c) Until 1996, three directors shall represent the first subset, three directors shall represent the second subset, and nine directors shall represent the third subset. In 1996 and thereafter, two directors shall represent the first subset, two directors shall represent the second subset, six directors shall represent the third subset, and five directors shall represent all three subsets.

(d) No director who represents all three subsets shall be a current or former officer or employee of the association or of any association member, or have a business relationship or other interest that could interfere with his or her exercise of independent judgment.

(e) Each subset shall select the directors who will represent it individually through an annual election in which each member of the subset shall be entitled to vote for the number of directors that will represent such members' subset.

(f) The association membership shall select the directors for the following calendar year who will represent all three subsets through an annual election in which each member of the association shall be entitled to one vote for

each director position. There shall be at least two candidates meeting the qualifications in paragraph (d) of this section for each such director position:

(1) In any election in which the most recently elected director for such position is not a qualified candidate;

(2) If there has been no election for such position having more than one qualified candidate during the present and the two preceding calendar years; and

(3) In any election for which the ballot lists two or more qualified candidates.

(g) At least one director representing all three subsets shall be a member of each committee of association directors.

(h) For each access element or group of access elements for which voluntary pooling is permitted, there shall be a committee that is responsible for the preparation of charges for the associated access elements that comply with all applicable sections in this part.

(i) Directors shall serve for a term of one year commencing January 1 and concluding on December 31 of each year.

[60 FR 19530, Apr. 19, 1995]

§69.603 Association functions.

(a) The Association shall not engage in any activity that is not related to the preparation of access charge tariffs or the collection and distribution of access charge revenues or the operation of a billing and collection pool on an untariffed basis unless such activity is expressly authorized by order of the Commission.

(b) Participation in Commission or court proceedings relating to access charge tariffs, the billing and collection of access charges, the distribution of access charge revenues, or the operation of a billing and collection pool on an untariffed basis shall be deemed to be authorized association activities.

(c) The association shall administer the Universal Service charge, including the direct billing to and collection of associated revenues on a monthly basis from interexchange carriers pursuant to §60.116 and the distribution of these revenues to qualified telephone companies based on their share of expenses assigned to the Universal Service Factor portion of the interstate allocation pursuant to §36.631.

(d) The association shall administer the Lifeline Assistance charge, including the direct billing to and collection of associated revenues on a monthly basis from interexchange carriers pursuant to §69.117, and the distribution of these revenues to qualified telephone companies based on their share of expenses assigned to the Lifeline Assistance Fund pursuant to §36.741 and of End User Common Line charges associated with the operation of §69.104(j)–(l).

(e) The association shall annually compute, in accordance with §§69.105 and 69.612, the mandatory Long Term Support payment of telephone companies that are not association Common Line tariff participants, bill and collect the appropriate amounts on a monthly basis from such telephone companies, and distribute Long Term Support revenue among association Carrier Common Line tariff participants.

(f) The association shall annually compute, in accordance with §69.612, the Transitional Support requirement for Level I and Level II Company Receivers, bill and collect the appropriate amounts on a monthly basis from Level I and Level II Contributors, and distribute the Transitional Support requirement among Level I and Level II Receivers.

(g) The association shall also prepare and file an access charge tariff containing terms and conditions for access service and form for the filing of rate schedules by telephone companies that choose to reference these terms and conditions while filing their own access rates.

(h) The association shall divide the expenses of its operations into two categories. The first category (''Category I Expenses'') shall consist of those expenses that are associated with the preparation, defense, and modification of association tariffs, those expenses that are associated with the administration of pooled receipts and distributions of exchange carrier revenues resulting from association tariffs, those expenses that are associated with association functions pursuant to §69.603 (c)–(g), and those expenses that pertain to Commission proceedings involving

subpart G of part 69 of the Commission's rules. The second category (''Category II Expenses'') shall consist of all other association expenses. Category I Expenses shall be sub-divided into three components in proportion to the revenues associated with each component. The first component (''Category I.A Expenses'') shall be in proportion to the Universal Service Fund and Lifeline Assistance revenues. The second component (''Category I.B Expenses'') shall be in proportion to the sum of the association End User Common Line revenues, the association Carrier Common Line revenues, the association Special Access Surcharge revenues, the Long Term Support payments and the Transitional Support payments. The third component (''Category I.C Expenses'') shall be in proportion to the revenues from all other association interstate access charges.

(i)(1) The revenue requirement for association tariffs filed pursuant to § 69.4(c) shall not include any association expenses other than Category I.A Expenses.

(2) The revenue requirement for association tariffs filed pursuant to § 69.4 (a) and (b)(2) shall not include any Association expenses other than Category I.B Expenses.

(3) The revenue requirement for association tariffs filed pursuant to § 69.4(b) (1) and (3)–(7) shall not include any association expenses other than Category I.C Expenses.

(4) No distribution to an exchange carrier of Universal Service Fund and Lifeline Assistance revenues shall include adjustments for association expenses other than Category I.A Expenses.

(5) No distribution to an exchange carrier of revenues from association End User Common Line or Carrier Common Line charges, Special Access Surcharges or Long Term Support or Transitional Support payments shall include adjustments for association expenses other than Category I.B Expenses.

(6) No distribution to an exchange carrier of revenues from association interstate access charges other than End User Common Line and Carrier Common Line charges and Special Access Surcharges shall include adjustments for association expenses other than Category I.C Expenses.

(7) The association shall separately identify all Category I.A, I.B and I.C expenses in cost support materials filed with each annual association access tariff filing.

[54 FR 8197, Feb. 27, 1989, as amended at 54 FR 8199, Feb. 27, 1989]

§ 69.604 Billing and collection of access charges.

(a) Telephone companies shall bill and collect all access charges except those charges specified in §§ 69.116 and 69.117.

(b) All access charges shall be billed monthly.

[51 FR 9012, Mar. 17, 1986, as amended at 52 FR 21543, June 8, 1987]

§ 69.605 Reporting and distribution of pool access revenues.

(a) Access revenues and cost data shall be reported by participants in association tariffs to the association for computation of monthly pool revenues distributions in accordance with this subpart.

(b) Association expenses incurred during the month that are allowable access charge expenses shall be reimbursed before any other funds are disbursed.

(c) Except as provided in paragraph (b) of this section, payments to average schedule companies that are computed in accordance with § 69.606 shall be disbursed before any other funds are disbursed. For purposes of this part, a telephone company that was participating in average schedule settlements on December 1, 1982, shall be deemed to be an average schedule company except that any company that does not join in association tariffs for all access elements shall not be deemed to be an average schedule company.

(d) The residue shall be disbursed to telephone companies that are not average schedule companies in accordance with §§ 69.607 through 69.610.

(e) The association shall submit a report on or before February 1 of each calendar year describing the association's cost study review process for the preceding calendar year as well as the

results of that process. For any revisions to cost study results made or recommended by the association that would change the respective carrier's calculated annual common line or traffic sensitive revenue requirement by ten percent or more, the report shall include the following information:

(1) The name of the carrier;

(2) A detailed description of the revisions;

(3) The amount of the revisions;

(4) The impact of the revisions on the carrier's calculated common line and traffic sensitive revenue requirements; and

(5) The carrier's total annual common line and traffic sensitive revenue requirement.

[48 FR 10358, Mar. 11, 1983, as amended at 51 FR 17027, May 8, 1986; 52 FR 21543, June 8, 1987; 54 FR 11537, Mar. 21, 1989; 60 FR 19530, Apr. 19, 1995]

§69.606 Computation of average schedule company payments.

(a) Payments shall be made in accordance with a formula approved or modified by the Commission. Such formula shall be designed to produce disbursements to an average schedule company that simulate the disbursements that would be received pursuant to §69.607 by a company that is representative of average schedule companies.

(b) The association shall submit a proposed revision of the formula for each annual period subsequent to December 31, 1986, or certify that a majority of the directors of the association believe that no revisions are warranted for such period on or before December 31 of the preceding year.

(47 U.S.C. 154 (i) and (j), 201, 202, 203, 205, 218 and 403 and 5 U.S.C. 553)

[48 FR 10358, Mar. 11, 1983, as amended at 50 FR 41356, Oct. 10, 1985; 55 FR 6990, Feb. 28, 1990]

§69.607 Disbursement of Carrier Common Line residue.

(a) The association shall compute a monthly net balance for each member telephone company that is not an average schedule company. If such a company has a negative net balance, the association shall bill that amount to such company. If such a company has a positive net balance, the association shall disburse that amount to such company.

(b) The net balance for such a company shall be computed by multiplying a hypothetical net balance for such a company by a factor that is computed by dividing the Carrier Common Line residue by the sum of the hypothetical net balances for such companies.

(c) The hypothetical net balance for each company shall be the sum of the hypothetical net balances for each access element. Such hypothetical net balances shall be computed in accordance with §§69.608 to 69.610.

[48 FR 10358, Mar. 11, 1983, as amended at 51 FR 42237, Nov. 24, 1986]

§69.608 Carrier Common Line hypothetical net balance.

The hypothetical net balance shall be equal to a Carrier Common Line revenue requirement for each such company that is computed in accordance with subpart F of this part.

§69.609 End User Common Line hypothetical net balances.

(a) If the company does not participate in the association tariff for such element, the hypothetical net balance shall be zero.

(b) If the company does participate in the association tariff for such element, the hypothetical net balance shall be computed by multiplying an amount that is computed by deducting access revenues collected by such company for such element from an End User Common Line revenue requirement for such company that is computed in accordance with subpart F of this part by a factor that is computed by dividing access revenues collected by all such companies for such element by an End User Common Line revenue requirement for all such companies that is computed in accordance with subpart F of this part.

§69.610 Other hypothetical net balances.

(a) The hypothetical net balance for an access element other than a Common Line element shall be computed as provided in this section.

(b) If the company does not participate in the association tariff for such

element, the hypothetical net balance shall be zero.

(c) If the company does participate in the association tariff for such element, the hypothetical net balance shall be computed by deducting access revenues collected for such element from the sum of expense attributable to such element and the element residue apportioned to such company. The element residue shall be apportioned among such companies in the same proportions as the net investment attributable to such element.

(d) The element residue shall be computed by deducting expenses of all participating companies attributable to such element from revenues collected by all participating companies for such element.

[48 FR 10358, Mar. 11, 1983, as amended at 51 FR 42237, Nov. 24, 1986]

§ 69.611 Effect of optional alternative carrier common line tariff provisions and end user common line surcharges.

(a) The existence or potential existence of Optional Alternative tariff provisions filed pursuant to § 69.204 shall not affect the computation of association charges for any access element.

(b) End User Common Line surcharge revenues shall not be included in End User Common Line revenues for purposes of computing pool distributions.

(c) The Carrier Common Line residue that is computed pursuant to § 69.605 shall be increased by adding an amount that is computed by subtracting the Carrier Common Line revenues attributable to study areas with Alternative Carrier Common Line tariff provisions from the projected Carrier Common Line revenues for such study areas that would have been received at the association Carrier Common Line rate.

(d) The Carrier Common Line residue distribution that is computed pursuant to § 69.607 shall be reduced for a company that has effective Alternative Carrier Common Line tariff provisions by subtracting an amount that is computed by subtracting the Carrier Common Line revenues attributable to such company's study area of areas with Alternative Carrier Common Line tariff provisions from the projected Carrier Common Line revenues for such study area or areas that would have been received at the association Carrier Common Line rate.

[50 FR 945, Jan. 8, 1985]

§ 69.612 Long term and transitional support.

A telephone company that does not participate in the association Common Line tariff shall have computed by the association:

(a) *Long term support obligation.* (1) For the period from April 1, 1989 through June 30, 1994, the Long Term Support payment obligation shall be funded by all telephone companies that are not association Common Line tariff participants and do not receive transitional support pursuant to § 69.612(b).

(2) Beginning July 1, 1994 and thereafter, the Long Term Support payment obligation shall be funded by each telephone company that files its own Carrier Common Line tariff and does not receive transitional support.

(b) *Transitional support.* (1) Telephone Companies categorized as Level I and Level II Receivers that file their own Common Line tariffs effective April 1, 1989 shall receive Transitional Support for a four year period commencing April 1, 1989. Level II Receivers that file their own Common Line tariffs effective July 1, 1990 shall receive Transitional Support for a four year period commencing July 1, 1990. Transitional Support for each of these telephone companies shall be computed on the basis of the net revenues less revenue requirement amounts for 1988 (adjusted for the additional revenues resulting from an increase in End User Common Line charges to $3.50). Transitional Support for these telephone companies during the transition shall be as follows:

Year 1—80% of the adjusted 1988 frozen amount
Year 2—60% of the adjusted 1988 frozen amount
Year 3—40% of the adjusted 1988 frozen amount
Year 4—20% of the adjusted 1988 frozen amount

(2) For the period from April 1, 1989 through June 30, 1994, the Transitional Support Fund shall be funded by all telephone companies or groups of affiliated telephone companies that are not

association Common Line tariff participants and do not qualify under §69.612(b)(1) for Transitional Support payments.

[55 FR 6990, Feb. 28, 1990]