AUTHENTICATED
U.S. GOVERNMENT
INFORMATION
GPO

code of federal regulations

Panama Canal

35

Revised as of July 1, 1997

CONTAINING
A CODIFICATION OF DOCUMENTS
OF GENERAL APPLICABILITY
AND FUTURE EFFECT

AS OF JULY 1, 1997

With Ancillaries

Published by
the Office of the Federal Register
National Archives and Records
Administration

as a Special Edition of
the Federal Register

U.S. GOVERNMENT PRINTING OFFICE
WASHINGTON : 1997

For sale by U.S. Government Printing Office
Superintendent of Documents, Mail Stop: SSOP, Washington, DC 20402–9328

Table of Contents

	Page
Explanation	v
Title 35:	
Chapter I—Panama Canal Regulations	3
Finding Aids:	
Material Approved for Incorporation by Reference	197
Table of CFR Titles and Chapters	199
Alphabetical List of Agencies Appearing in the CFR	215
Redesignation Tables	225
List of CFR Sections Affected	299

Cite this Code: CFR

To cite the regulations in this volume use title, part and section number. Thus, 35 CFR 3.1 *refers to title 35, part 3, section 1.*

Explanation

The Code of Federal Regulations is a codification of the general and permanent rules published in the Federal Register by the Executive departments and agencies of the Federal Government. The Code is divided into 50 titles which represent broad areas subject to Federal regulation. Each title is divided into chapters which usually bear the name of the issuing agency. Each chapter is further subdivided into parts covering specific regulatory areas.

Each volume of the Code is revised at least once each calendar year and issued on a quarterly basis approximately as follows:

Title 1 through Title 16.....as of January 1
Title 17 through Title 27.....as of April 1
Title 28 through Title 41.....as of July 1
Title 42 through Title 50.....as of October 1

The appropriate revision date is printed on the cover of each volume.

LEGAL STATUS

The contents of the Federal Register are required to be judicially noticed (44 U.S.C. 1507). The Code of Federal Regulations is prima facie evidence of the text of the original documents (44 U.S.C. 1510).

HOW TO USE THE CODE OF FEDERAL REGULATIONS

The Code of Federal Regulations is kept up to date by the individual issues of the Federal Register. These two publications must be used together to determine the latest version of any given rule.

To determine whether a Code volume has been amended since its revision date (in this case, July 1, 1997), consult the ''List of CFR Sections Affected (LSA),'' which is issued monthly, and the ''Cumulative List of Parts Affected,'' which appears in the Reader Aids section of the daily Federal Register. These two lists will identify the Federal Register page number of the latest amendment of any given rule.

EFFECTIVE AND EXPIRATION DATES

Each volume of the Code contains amendments published in the Federal Register since the last revision of that volume of the Code. Source citations for the regulations are referred to by volume number and page number of the Federal Register and date of publication. Publication dates and effective dates are usually not the same and care must be exercised by the user in determining the actual effective date. In instances where the effective date is beyond the cutoff date for the Code a note has been inserted to reflect the future effective date. In those instances where a regulation published in the Federal Register states a date certain for expiration, an appropriate note will be inserted following the text.

OMB CONTROL NUMBERS

The Paperwork Reduction Act of 1980 (Pub. L. 96–511) requires Federal agencies to display an OMB control number with their information collection request.

Many agencies have begun publishing numerous OMB control numbers as amendments to existing regulations in the CFR. These OMB numbers are placed as close as possible to the applicable recordkeeping or reporting requirements.

OBSOLETE PROVISIONS

Provisions that become obsolete before the revision date stated on the cover of each volume are not carried. Code users may find the text of provisions in effect on a given date in the past by using the appropriate numerical list of sections affected. For the period before January 1, 1986, consult either the List of CFR Sections Affected, 1949–1963, 1964–1972, or 1973–1985, published in seven separate volumes. For the period beginning January 1, 1986, a ''List of CFR Sections Affected'' is published at the end of each CFR volume.

INCORPORATION BY REFERENCE

What is incorporation by reference? Incorporation by reference was established by statute and allows Federal agencies to meet the requirement to publish regulations in the Federal Register by referring to materials already published elsewhere. For an incorporation to be valid, the Director of the Federal Register must approve it. The legal effect of incorporation by reference is that the material is treated as if it were published in full in the Federal Register (5 U.S.C. 552(a)). This material, like any other properly issued regulation, has the force of law.

What is a proper incorporation by reference? The Director of the Federal Register will approve an incorporation by reference only when the requirements of 1 CFR part 51 are met. Some of the elements on which approval is based are:

(a) The incorporation will substantially reduce the volume of material published in the Federal Register.

(b) The matter incorporated is in fact available to the extent necessary to afford fairness and uniformity in the administrative process.

(c) The incorporating document is drafted and submitted for publication in accordance with 1 CFR part 51.

Properly approved incorporations by reference in this volume are listed in the Finding Aids at the end of this volume.

What if the material incorporated by reference cannot be found? If you have any problem locating or obtaining a copy of material listed in the Finding Aids of this volume as an approved incorporation by reference, please contact the agency that issued the regulation containing that incorporation. If, after contacting the agency, you find the material is not available, please notify the Director of the Federal Register, National Archives and Records Administration, Washington DC 20408, or call (202) 523–4534.

CFR INDEXES AND TABULAR GUIDES

A subject index to the Code of Federal Regulations is contained in a separate volume, revised annually as of January 1, entitled CFR INDEX AND FINDING AIDS. This volume contains the Parallel Table of Statutory Authorities and Agency Rules (Table I), and Acts Requiring Publication in the Federal Register (Table II). A list of CFR titles, chapters, and parts and an alphabetical list of agencies publishing in the CFR are also included in this volume.

An index to the text of ''Title 3—The President'' is carried within that volume.

The Federal Register Index is issued monthly in cumulative form. This index is based on a consolidation of the ''Contents'' entries in the daily Federal Register.

A List of CFR Sections Affected (LSA) is published monthly, keyed to the revision dates of the 50 CFR titles.

REPUBLICATION OF MATERIAL

There are no restrictions on the republication of material appearing in the Code of Federal Regulations.

INQUIRIES

For a legal interpretation or explanation of any regulation in this volume, contact the issuing agency. The issuing agency's name appears at the top of odd–numbered pages.

For inquiries concerning CFR reference assistance, call 202–523–5227 or write to the Director, Office of the Federal Register, National Archives and Records Administration, Washington, DC 20408.

SALES

The Government Printing Office (GPO) processes all sales and distribution of the CFR. For payment by credit card, call 202–512–1800, M–F, 8 a.m. to 4 p.m. e.s.t. or fax your order to 202–512–2233, 24 hours a day. For payment by check, write to the Superintendent of Documents, Attn: New Orders, P.O. Box 371954, Pittsburgh, PA 15250–7954. For GPO Customer Service call 202–512–1803.

RAYMOND A. MOSLEY,
Director,
Office of the Federal Register.

July 1, 1997.

THIS TITLE

Title 35—PANAMA CANAL is composed of one volume. The contents of this volume represent all current regulations of the Panama Canal Commission as of July 1, 1997.

On October 1, 1979, the United States relinquished and Panama assumed plenary jurisdiction over what was the Canal Zone. Pursuant to the Panama Canal Act of 1979, Pub. L. 96–70, the statute implementing the new treaty, the Canal Zone Government was disestablished and the Panama Canal Company was replaced by a new United States Government agency, the Panama Canal Commission, which will operate the waterway until the termination of the treaty on December 31, 1999.

Redesignation tables appear in the Finding Aids section of this volume.

For this volume, Cheryl E. Sirofchuck was Chief Editor. The Code of Federal Regulations publication program is under the direction of Frances D. McDonald, assisted by Alomha S. Morris.

Would you like to know. . .

if any changes have been made to the *Code of Federal Regulations* or what documents have been published in the *Federal Register* without reading the *Federal Register* every day? If so, you may wish to subscribe to the *LSA* (List of CFR Sections Affected), the *Federal Register Index,* or both.

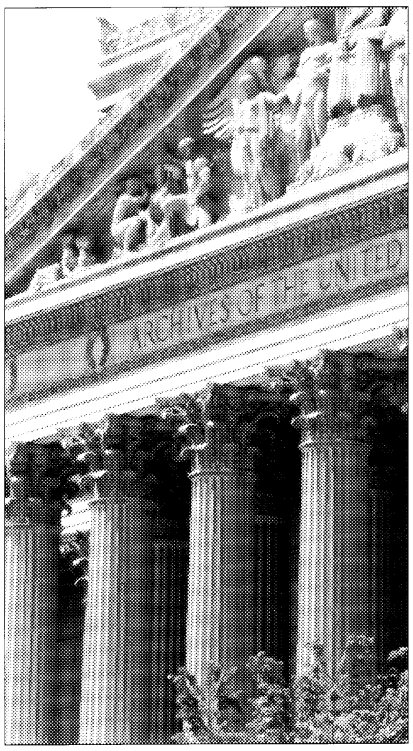

LSA

The *LSA* (List of CFR Sections Affected) is designed to lead users of the *Code of Federal Regulations* to amendatory actions published in the *Federal Register*. The *LSA* is issued monthly in cumulative form. Entries indicate the nature of the changes—such as revised, removed, or corrected.
$27 per year.

Federal Register Index

The index, covering the contents of the daily *Federal Register,* is issued monthly in cumulative form. Entries are carried primarily under the names of the issuing agencies. Significant subjects are carried as cross-references.
$25 per year.

A finding aid is included in each publication which lists *Federal Register* page numbers with the date of publication in the *Federal Register.*

Superintendent of Documents Subscription Order Form

Order Processing Code:
***5421**

❑ **YES,** send me the following indicated subscriptions for one year:

____ **LSA (List of CFR Sections Affected),** (LCS) for $27 per year.

____ **Federal Register Index** (FRSU) $25 per year.

The total cost of my order is $ _____
Price is subject to change. International customers please add 25%.

(Includes regular shipping and handling.)

For privacy check box below:

❑ Do not make my name available to other mailers

Check method of payment:

❑ Check payable to Superintendent of Documents

❑ GPO Deposit Account ☐☐☐☐☐☐☐ — ☐

❑ VISA ❑ MasterCard ☐☐☐☐ (expiration date)

Company or personal name

Street address

City, State, ZIP code

Daytime phone with area code

Purchase order No. (optional)

Credit card No. (must be 20 digits)

Thank you for your order!

Authorizing signature 1/97

Mail To: Superintendent of Documents
PO Box 371954
Pittsburgh PA 15250–7954

Fax your orders (202) 512–2250
Phone your orders (202) 512–1800

Title 35—Panama Canal

Part
CHAPTER I—Panama Canal Regulations 3

CHAPTER I—PANAMA CANAL REGULATIONS[1]

EDITORIAL NOTE: Upon entry into force on October 1, 1979, of the Panama Canal Treaty of 1977, the United States relinquished and Panama assumed plenary jurisdiction over what was the Canal Zone. Pursuant to the Panama Canal Act of 1979, Pub. L. 96–70, the statute implementing the new treaty, the Canal Zone Government was disestablished and the Panama Canal Company was replaced by a new United States Government agency, the Panama Canal Commission, which will operate the waterway until the termination of the treaty on December 31, 1999. Many of the functions performed by the two former Canal agencies will not be undertaken by the Panama Canal Commission.

As a result of the Treaty and Pub. L. 96–70, the regulations published in Title 35, have to be rewritten in accordance with the substantially different authority and responsibilities which the new agency has.

It should be noted that those regulations which have not been revised since October 1, 1979 must be read in light of the new definitions provided by section 3 of Pub. L. 96–70, which states in part as follows:

(b) Subject to the provisions of subsection (c) of this section, for purposes of applying the Canal Zone Code or other laws of the United States and regulations issued pursuant to such Code or other laws with respect to transactions, occurrences, or status on or after the effective date of this Act—

(1) ''Canal Zone'' shall be deemed to refer to the areas and installations in the Republic of Panama made available to the United States pursuant to the Panama Canal Treaty of 1977 and related agreements;

(2) ''Canal Zone waters'' and ''waters of the Canal Zone'' shall be deemed to refer to ''Panama Canal waters'' and ''waters of the Panama Canal'', respectively;

(3) ''Government of the Canal Zone'' or ''Canal Zone Government'' shall be deemed to refer to the United States of America;

(4) ''Governor of the Canal Zone'' or ''Governor'', wherever the reference is to the Governor of the Canal Zone, shall be deemed to refer to the Panama Canal Commission;

(5) ''Panama Canal Company'' or ''Company'' wherever the reference is to the Panama Canal Company, shall be deemed to refer to the Panama Canal Commission;

(6) In chapter 57 of title 5 of the Canal Zone Code, ''hospitals'' and ''Health Bureau'' shall be deemed to refer, respectively, to the hospitals operated by the United States in the Republic of Panama, and to the organizational unit operating such hospitals; and

(7) In chapter 57 of title 5 of the Canal Zone Code, in section 4784 of title 6 of such Code, and in section 2 of title 7 of such Code, ''health director'' shall be deemed to refer to the senior official in charge of the hospitals operated by the United States in the Republic of Panama.

(c) Any reference set forth in subsection (b) of this section shall apply except as otherwise provided in this Act or unless (1) such reference is inconsistent with the provisions of this Act, (2) in the context in which a term is used such reference is clearly not intended, or (3) a term refers to a time before the effective date of this Act.

Parts 1, 5, 53, 57, 59, 63, 65, 69, 127, and 129 have been removed because they are inconsistent with the provisions of the Panama Canal Treaty of 1977 and related

[1] Pursuant to Pub. L. 96–70 and a document published at 44 FR 75306, Dec. 19, 1979, the chapter heading has been adjusted to read ''Panama Canal Regulations.''

agreements or with Pub. L. 96–70. Other parts have been amended, revised or recodified to comply with the new statutory basis and agency organization.

SUBCHAPTER A—ORGANIZATION AND ADMINISTRATION

Part		*Page*
3	Organization of Panama Canal Commission	7
7	Claims of employees of Panama Canal Commission under Military Personnel and Civilian Employees' Claims Act of 1964, as amended	8
9	Organization, functions, and availability of records—Panama Canal Commission	11
10	Access to information about individuals	21

SUBCHAPTER B—GENERAL REGULATIONS

60	Classified information	32
61	Health, sanitation, and communicable disease surveillance	47
67	Canal Zone postal money orders and savings certificates	59
70	Procedures for changing rules of measurement or rates of tolls	66

SUBCHAPTER C—SHIPPING AND NAVIGATION

101	Arriving and departing vessels: Various communication, documentation, sanitation and admeasurement requirements	69
103	General provisions governing vessels	72
104	Vessel transit reservation system	85
105	Pilotage	88
107	Manning of vessels: Requirements concerning officers and crew	89
109	Entering and preparing to enter the locks	91
111	Rules for the prevention of collisions	94
113	Dangerous cargoes	108
115	Board of Local Inspectors: Composition and functions	114
117	Marine accidents: Investigations; control; responsibility	115
119	Licensing of officers	117
121	Inspection and registration of vessels	126
123	Radio communication	139
125	Sanitary requirements: Vessel wastes; garbage; ballast	142
131	Neutrality of canal	142
133	Tolls for use of canal	142

Part		Page
135	Rules for measurement of vessels	145

SUBCHAPTER D—[RESERVED]

SUBCHAPTER E—EMPLOYMENT AND COMPENSATION UNDER THE PANAMA CANAL EMPLOYMENT SYSTEM

251	Regulations of the Secretary of the Army (Panama Canal Employment System)—Personnel policy	159
253	Regulations of the Secretary of the Army (Panama Canal Employment System)—Employment policy	166
255	[Reserved]	
256	Salary offset for Federal employees who are indebted to the United States	180
257	Enforcement of nondiscrimination on the basis of handicap in programs or activities conducted by Panama Canal Commission	188

SUBCHAPTER A—ORGANIZATION AND ADMINISTRATION

PART 3—ORGANIZATION OF PANAMA CANAL COMMISSION

AUTHORITY: Issued under the authority vested in President by provisions of 3 U.S.C. 301; 22 U.S.C. 3811; EO 12215, dated May 27, 1980, 45 FR 36043.

Subpart A—Delegation of Panama Canal Functions

§3.1 Text of Executive Order 12215 of May 27, 1980.

By the authority vested in me as President of the United States of America by the Panama Canal Code (76A Stat. 1), as amended, by the Panama Canal Act of 1979 (93 Stat. 452; 22 U.S.C. 3601 *et seq.*), and by section 301 of Title 3 of the United States Code, it is hereby ordered as follows:

1–1. The Secretary of Defense.

1–101. The Secretary of Defense shall develop for the President's consideration an appropriate legislative proposal as required by section 3(d) of the Panama Canal Act of 1979 (93 Stat. 456; 22 U.S.C. 3602(d)). The Secretary of Defense shall coordinate development of this proposal with the Secretary of State and the heads of other interested Executive agencies.

1–102. The function vested in the President by section 1212(d)(1) of the Panama Canal Act of 1979 (93 Stat. 464; 22 U.S.C. 3652(d)(1)) to exclude employees of, or positions within, the Department of Defense from coverage under any provision of subchapter II, chapter 2 of title I of the Panama Canal Act of 1979, is delegated to the Secretary of Defense.

1–103. The function vested in the President by section 1281(b) of Title 6 of the Panama Canal Code (76A Stat. 455; 6 P.C.C. 1281(b)), as amended, with respect to areas and installations made available to the United States pursuant to the Agreement in Implementation of Article IV of the Panama Canal Treaty of 1977 is delegated to the Secretary of Defense.

1–104. The function vested in the President by section 1701 of the Panama Canal Act of 1979 (93 Stat. 492; 22 U.S.C. 3801), with respect to regulations applicable within the areas and installations made available to the United States pursuant to the Agreement in Implementation of Article IV of the Panama Canal Treaty of 1977, is delegated to the Secretary of Defense.

1–105. The functions vested in the President by sections 1243(c)(1) and 2401 of the Panama Canal Act of 1979 (93 Stat. 474 and 495; 22 U.S.C. 3681(c)(1) and 3851) are delegated to the Secretary of Defense.

1–106. The functions vested in the President by section 1502(a) of the Panama Canal Act of 1979 (93 Stat. 488; 22 U.S.C. 3782(a)) are delegated to the Secretary of Defense.

1–2. Coordination of Pay and Employment Practices.

1–201. In order to coordinate the policies and activities of agencies under subchapter II of chapter 2 of title I of the Panama Canal Act of 1979 (93 Stat. 463; 22 U.S.C. 3651 *et seq.*), each agency shall periodically consult with the Secretary of Defense with respect to the establishment of rates of pay, in order to develop compatible or unified systems for basic pay. In addition, each agency shall consult with the Secretary of Defense on such other matters as the Secretary may deem appropriate in order to develop compatible or unified employment practices.

1–202. The head of each agency shall, upon approval by the Secretary of Defense, adopt a schedule of basic pay pursuant to section 1215 of the Panama Canal Act of 1979 (93 Stat. 465; 22 U.S.C. 3655) and adopt regulations governing other matters relating to pay and employment practices.

1–203. The authority vested in the President by section 1223(a) of the Panama Canal Act of 1979 to coordinate the policies and activities of agencies (93 Stat. 467; 22 U.S.C. 3663(a)) is delegated to the Secretary of Defense. The Secretary shall exercise such functions in a manner which is in accord with the provisions of sections 1–201 and 1–202 of this Order.

1–3. Panama Canal Commission.

1–301. The functions vested in the President and delegated to the Secretary of Defense in this section 1–3 of

this Order shall be carried out by the Secretary of Defense, who shall, in carrying out the said functions, provide, by redelegation or otherwise, for their performance, in a manner consistent with paragraph 3 of Article III of the Panama Canal Treaty of 1977, by the Panama Canal Commission.

1–302. The authority of the President under section 1104 of the Panama Canal Act of 1979 (93 Stat. 457; 22 U.S. 3614) to fix the compensation of and to define the authorities and duties of the Deputy Administrator and the Chief Engineer is delegated to the Secretary of Defense.

1–303. The functions vested in the President by sections 1418, 1801, and 2206 of the Panama Canal Act of 1979 (93 Stat. 487, 492, and 494; 22 U.S.C. 3778, 3811, and 3844) are delegated to the Secretary of Defense.

1–304. The authority of the President under section 1701 of the Panama Canal Act of 1979 (93 Stat. 492; 22 U.S.C. 3801) with respect to regulations applicable within the areas and installations made available to the United States pursuant to the Agreement in Implementation of Article III of the Panama Canal Treaty of 1977 is delegated to the Secretary of Defense.

1–305. The function vested in the President by section 1281(b) of Title 6 of the Panama Canal Code (76A Stat. 455; 6 P.C.C. 1281(b)), as amended, with respect to areas and installations in the Republic of Panama made available to the United States pursuant to the Agreement in Implementation of Article III of the Panama Canal Treaty of 1977 is delegated to the Secretary of Defense.

1–306. The functions vested in the President by sections 82 and 86 of Title 3 of the Panama Canal Code (76A Stat. 54 and 55; 3 P.C.C. 82 and 86), as amended, are delegated to the Secretary of Defense.

1–307. The functions vested in the President by subsections (a), (b) and (c) of section 8146 of Title 5 of the United States Code, as they apply to the employees of the Panama Canal Commission, are delegated to the Secretary of Defense.

1–308. Except to the extent heretofore delegated, the functions vested in the President pursuant to subchapter II of chapter 2 of title I of the Panama Canal Act of 1979 (93 Stat. 463) are hereby delegated to the Secretary of Defense.

1–4. Other Agencies.

1–401. The functions vested in the President by sections 1111 and 3301 of the Panama Canal Act of 1979 (93 Stat. 459 and 497; 22 U.S.C. 3621 and 3871), are delegated to the Secretary of State. The Secretary shall perform these functions in coordination with the Secretary of Defense.

1–402. The functions vested in the President by sections 1112(d), 1344(b), and 1504(b) of the Panama Canal Act of 1979 (93 Stat. 460, 484, and 488; 22 U.S.C. 3622(d), 3754(b), and 3784(b)) are delegated to the Secretary of State.

1–403. The functions vested in the President by section 1243(a)(1) of the Panama Canal Act of 1979 (93 Stat. 473; 22 U.S.C. 3681(a)(1)) are delegated to the Director of the Office of Personnel Management.

1–404. Paragraphs (22) and (23) of section 1 of Executive Order No. 11609, as amended, and Executive Order No. 11713 are revoked.

[51 FR 21359, June 12, 1986]

PART 7—CLAIMS OF EMPLOYEES OF PANAMA CANAL COMMISSION UNDER MILITARY PERSONNEL AND CIVILIAN EMPLOYEES' CLAIMS ACT OF 1964, AS AMENDED

Sec.

7.1 Definitions.
7.2 Applicability and scope.
7.3 Claimants.
7.4 Conditions.
7.5 Principal types of claims payable.
7.6 Principal types of claims not payable
7.7 Types and quantity of property.
7.8 Computation of award.
7.9 Claims procedure.
7.10 Supporting papers.
7.11 Settlement.
7.12 Agents' or attorneys' fees.

AUTHORITY: Sec. 3, 78 Stat. 767; 31 U.S.C. 241.

SOURCE: 31 FR 12406, Sept. 17, 1966, unless otherwise noted.

§ 7.1 Definitions.

As used in this part:

(a) *The Act* means the Military Personnel and Civilian Employees' Claims Act of 1964, as amended (78 Stat. 767; 79 Stat. 789);

(b) *Employee* means an employee of the Panama Canal Commission (also referred to as *the Commission*) and includes a member of the uniformed services assigned to duty with the Commission;

(c) *Government* means the Panama Canal Commission unless the context indicates a broader meaning;

(d) *Chief Financial Officer* means the Chief Financial Officer of the Panama Canal Commission acting for and in behalf of the Commission;

(e) *Chief Accountant* means Chief Accountant of the Panama Canal Commission acting for and in behalf of the Commission;

(f) *Chief, Claims Branch,* means the Chief of the Claims Branch, Accounting Division, of the Panama Canal Commission acting for and in behalf of the Commission.

[31 FR 12406, Sept. 17, 1966, as amended at 44 FR 75308, Dec. 19, 1979]

§7.2 Applicability and scope.

Pursuant to the Act, the Government will settle and pay claims by employees for the loss of or damage to personal property which occurs incident to Government service. Each such claim must be substantiated and the possession of the property must be shown to have been reasonable, useful, or proper under the circumstances. The maximum amount allowable on any claim is $15,000. In lieu of a cash settlement, property may be replaced in kind at the option of the Government.

[42 FR 17875, Apr. 4, 1977]

§7.3 Claimants.

A claim may be filed by an employee or in his name by his spouse, as authorized agent, or by any other authorized agent or legal representative of the employee. If the employee is dead, the claim may be filed by his (a) spouse, (b) children, (c) father or mother, or both, or (d) brothers or sisters, or both. Payments in settlement of claims to survivors of employees will be made in the order of precedence set forth in this section.

§7.4 Conditions.

As prescribed by the Act, a claim is not allowable if:

(a) Claimant fails to present it in writing within 2 years after it accrues, except that if the claim accrues in time of war or in time of armed conflict in which any armed force of the United States is engaged or if such a war or armed conflict intervenes within 2 years after it accrues, and if good cause is shown, the claim may be presented not later than 2 years after that cause ceases to exist, or 2 years after the war or armed conflict is terminated, whichever is earlier;

(b) The loss occurred at quarters occupied by the claimant within the 50 States or the District of Columbia unless such quarters were assigned to the employee or otherwise provided in kind by the Government; or

(c) The loss was caused wholly or partly by the negligent or wrongful act of the claimant, his agent, or his employee.

§7.5 Principal types of claims payable.

The following examples are illustrative of the circumstances or situations out of which compensable claims may arise. Loss or damage due to other causes may also be payable under these regulations.

(a) Damage to or loss of property by fire, flood, hurricane or other unusual occurrence, or by theft, while located at:

(1) Quarters, wherever situated, if assigned or provided in kind by the Government.

(2) Quarters outside the 50 States and the District of Columbia without regard to whether assigned or provided in kind by the Government, unless the employee involved is a local or native resident.

(3) Any warehouse, or other place designated by a responsible official for the storage of the property.

(b) Damage to or loss of property due to a marine, rail, or aircraft accident, or other unusual occurrence.

(c) Damage to or loss of property, including vehicles, trailers, and property contained therein, which:

(1) Is incident to the performance of duty and is sustained as a result of or in connection with civil disturbance,

public disorder, efforts to save human life or Government property, or a natural or other disaster; or

(2) Occurs in areas and installations in the Republic of Panama made available to the United States pursuant to the Panama Canal Treaty of 1977 and related agreements and results from vandalism that is determined to have been politically motivated.

(d) Damage to or loss of property which is incident to the performance of duty, *Provided,* That such damage or loss results from an incident that is not attributable to a common or usual risk of the claimant's employment.

(e) Damage to or loss of property used for the benefit of the Government at the direction of a responsible official.

(f) Money deposited with an authorized Government agent for safekeeping.

(g) Damages to or loss of property incident to transportation or storage pursuant to orders or in connection with travel under orders, including property in the custody of—

(1) A common or contract carrier or other commercial carrier under contract with the Government;

(2) An agent or agency of the Government; or

(3) The claimant, or while in a public or private conveyance in which he is being transported while in official travel status.

(Sec. 3(b)(1), Pub. L. 96–70, 93 Stat. 455)

[31 FR 12406, Sept. 17, 1966, as amended at 42 FR 17875, Apr. 4, 1977; 44 FR 75308, Dec. 19, 1979]

§ 7.6 Principal types of claims not payable.

The following are examples of types and categories of property for which compensation will not be allowed:

(a) Losses or damages totaling less than one dollar.

(b) Money or currency except when deposited with an authorized Government agent for safekeeping or except when lost incident to a marine, rail, aircraft, or other common disaster, or a natural disaster such as a fire, flood, hurricane, etc.

(c) Small items of substantial value such as cameras, watches, jewelry, and furs, which are lost, damaged, or stolen during shipment by ordinary means, e.g., with household goods or hold luggage.

(d) Articles being worn (unless allowable under § 7.5 (c) or (d)).

(e) Intangible property such as bank books, checks, notes, stock certificates, money orders, travelers checks, etc.

(f) Property owned by the United States, unless employee is financially responsible for it to another Government agency.

(g) Claims for loss or damage to motor vehicles or trailers or personal property contained therein (unless allowable under § 7.5 (c), (d) or (g)).

(h) Losses of insurers and subrogees.

(i) Losses recovered or recoverable from insurers and carriers.

(j) Losses recovered or recoverable pursuant to contract.

(k) Claims for damage or loss caused, in whole or in part, by the negligence or wrongful act of the employee or his agent.

(l) Property used for business or profit.

(m) Theft from the possession of the employee unless due care was used to protect possession.

(n) Property acquired, posessed or transported in violation of law or regulations.

(o) Loss in quarters located within the 50 States or the District of Columbia not assigned or otherwise provided in kind by the Government.

[31 FR 12406, Sept. 17, 1966, as amended at 42 FR 17875, Apr. 4, 1977; 44 FR 75308, Dec. 19, 1979]

§ 7.7 Types and quantity of property.

Claims are allowable only for such types and quantities of tangible personal property as to which its possession is determined to have been reasonable, useful, or proper under the attendant circumstances at the time of the loss or damage.

§ 7.8 Computation of award.

(a) *Lost or destroyed property.* The amount allowable for an item of property that is lost or destroyed may not exceed its actual value at the time the loss occurs. Such value may be based upon the replacement cost at the place where claimant resides when award is

made, subject to appropriate depreciation to reflect the age and condition of the item at the time of loss and to reduction for salvage value, if any. Property is considered ''destroyed'', for purposes of this section, if the cost of repairs would exceed the value of the property immediately prior to the incident out of which the claim arose.

(b) *Damaged property*. Normally the amount allowable for damaged property will be the cost of repairs, unless it is determined to be in the best interests of the Government to authorize a higher award.

(c) *Special limitations.* There is reserved to the Chief, Claims Branch, subject to the supervision of the Chief Accountant, the authority to fix the maximum amount payable for specific classes of articles, to establish limitations on the maximum quantity of an item for which payment will be allowed, and, when appropriate, to require that repairs be made by the Government.

[42 FR 17875, Apr. 4, 1977]

§ 7.9 Claims procedure.

The claimant must submit his claim in writing on a prescribed form covering employees claims for loss of or damage to personal property.

The form should be sent to the Panama Canal Commission, Chief, Claims Branch, Office of Financial Management, Unit 2300, APO AA 34011–2300 (or Balboa, Republic of Panama).

[44 FR 75308, Dec. 19, 1979, as amended at 59 FR 26122, May 19, 1994]

§ 7.10 Supporting papers.

In addition to the information provided on the claim form, the claimant may be required to furnish the following:

(a) Detailed estimates of the value of the property immediately before the incident out of which the claim arose and detailed estimates of the repair costs.

(b) With respect to claims involving thefts or losses in quarters or other places where the property was reasonably kept:

(1) A statement as to location of place where the theft or loss occurred;

(2) A statement as to what security precautions were taken to protect the property involved; and

(3) An explanation of the facts and circumstances surrounding the loss or theft.

(c) With respect to claims involving property being used for the benefit of the Government, a statement by the employee's supervisor evidencing that the claimant was required to provide such property or that his providing it was in the interest of the Government.

(d) As respects a claim filed by an agent or survivor, a power of attorney or other satisfactory evidence of authority to file.

[31 FR 12406, Sept. 17, 1966, as amended at 42 FR 17875, Apr. 4, 1977]

§ 7.11 Settlement.

Upon receipt of a claim under the regulations in this part, the Chief, Claims Branch, subject to the supervision of the Chief Accountant, shall make a determination with respect to its merits and, if allowable, authorize payment. If the claim is disallowed in whole or in part, the claimant shall be advised in writing as to the reason for the disallowance. The settlement determination by the Chief, Claims Branch, is final and conclusive.

[42 FR 17875, Apr. 4, 1977]

§ 7.12 Agents' or attorneys' fees.

As provided by the Act, fees payable to any agent or attorney in connection with services rendered in connection with a claim hereunder shall not exceed 10 per centum of the amount paid in settlement of such claim. Any person violating the provisions of the Act, as therein provided, shall be deemed guilty of a misdemeanor and upon conviction thereof is liable to a fine of up to $1,000.

PART 9—ORGANIZATION, FUNCTIONS, AND AVAILABILITY OF RECORDS—PANAMA CANAL COMMISSION

Subpart A—Organization and Functions of the Commission; Availability of Information and Official Records

Sec.

9.1 Purpose of this subpart.
9.2 Organization.
9.3 Functions.
9.4 How to request general information or publications.
9.5 The Freedom of Information Act.
9.6 How to make a Freedom of Information Act request.
9.7 How your Freedom of Information Act request will be handled.
9.8 How to make an appeal under the Freedom of Information Act.
9.9 How your Freedom of Information Act appeal will be handled.
9.10 How the Commission may extend the time to respond to your request or appeal.
9.11 Fees for Freedom of Information Act requests.
9.12 Definitions.
9.13 Classifying requests for fee purposes.
9.14 Current index.
9.15 Annual report.
9.16 Predisclosure notification procedures for confidential commercial information.

Subpart B—Vital Statistics Records

9.31 Definitions.
9.32 Administration.
9.33 Functions of the Vital Statistics Unit.
9.34 Supplementary certificate upon adoption.
9.35 New birth certificate upon legitimation.
9.36 Delayed filing of birth certificate.
9.37 Altered certificates.
9.38 Certified copies of records.
9.39 Disclosure of records.

AUTHORITY: 5 U.S.C. 552, as amended by Pub. L. 99–570, 100 Stat. 3207; 22 U.S.C. 3611; E.O. 12600, 52 FR 23781, 3 CFR, 1987 Comp., p. 235.

SOURCE: 44 FR 75309, Dec. 19, 1979, unless otherwise noted.

Subpart A—Organization and Functions of the Commission; Availability of Information and Official Records

§ 9.1 Purpose of this subpart.

This subpart describes the organization and functions of the Panama Canal Commission (referred to in this part as ''the Commission'' or ''Agency'') and explains how a member of the public may request records from this agency under the Freedom of Information Act.

§ 9.2 Organization.

The principal office of the Panama Canal Commission is located at Balboa Heights, Republic of Panama. The Office of the Secretary of the Panama Canal Commission is located at International Square, 1825 I Street, NW., suite 1050, Washington, DC 20006–5402. The Commission also maintains a procurement office at 4400 Dauphine Street, New Orleans, LA 70146–6800.

[52 FR 31397, Aug. 20, 1987; 53 FR 16256, May 6, 1988, as amended at 59 FR 26122, May 19, 1994]

§ 9.3 Functions.

(a) The Panama Canal Commission, which replaced the Canal Zone Government and the Panama Canal Company effective October 1, 1979, is established in the executive branch of the United States by the Panama Canal Act of 1979 (Pub. L. 96–70, 93 Stat. 452) as an agency of the United States, for the purpose of maintaining and operating the Panama Canal and the facilities and appurtenances related thereto. As provided in section 1101 of that Act, the authority of the President with respect to the Commission is exercised through the Secretary of Defense.

(b) As provided in the Panama Canal Act of 1979, the supervision of the Commission is vested in a Board composed of nine members, one of whom is the Secretary of Defense or an officer of the Department of Defense designated by the Secretary. Not fewer than five members of the Board are nationals of the United States; the remaining members are nationals of the Republic of Panama.

(c) The President appoints the members of the Board. The members of the Board who are United States nationals are appointed by and with the advice and consent of the Senate. Each member of the Board holds office at the pleasure of the President.

(d) The Administrator of the Commission, who is appointed by the President, by and with the advice and consent of the Senate, holds office at the pleasure of the President.

(e) The Commission maintains and operates the Panama Canal and facilities and appurtenances related thereto, including electric power, water, and

telephone systems; procurement and storehouse facilities; motor transportation services; an agency press and duplicating center; marine and general repair shop; and an employees' housing system.

(The Panama Canal Act of 1979, secs. 1101, 1102, 1103, Pub. L. 96–70, 93 Stat. 456, 457)

§9.4 How to request general information or publications.

The Commission has an Office of Public Affairs which is responsible for providing information about the agency to members of the public and the press. If you are interested in general information about the Commission's activities, or copies of its publications, you should write, visit, or call this office. Address letters to: Panama Canal Commission, Office of Public Affairs, Unit 2300, APO AA 34011–2300 (or Balboa, Republic of Panama).

[46 FR 48659, Oct. 2, 1981, as amended at 52 FR 31397, Aug. 20, 1987; 53 FR 16256, May 6, 1988; 59 FR 26122, May 19, 1994]

§9.5 The Freedom of Information Act.

(a) The Freedom of Information Act (5 U.S.C. 552) is a law which creates a procedure for any person to request official records from United States Government agencies. The rest of the rules in this subpart explain how you may request official records from the Panama Canal Commission.

(b) The Freedom of Information Act requires every United States Government agency to make official records available to any person who requests them, unless the records that the person requests fall within one of more of the exceptions to availability listed in the law. For more details about these exceptions, see subsection (b) of section 552, Title 5, United States Code, available in libraries.

(c) The Freedom of Information Act does not require an agency to create records or compile information that you would like to have. The law deals only with making existing records available.

[44 FR 75309, Dec. 19, 1979, as amended at 52 FR 31397, Aug. 20, 1987; 53 FR 16256, May 6, 1988]

§9.6 How to make a Freedom of Information Act request.

(a) To make a request for a record using the Freedom of Information Act, you must:

(1) Write to the Panama Canal Commission, Agency Records Officer (Chief, Administrative Services Division), Unit 2300, APO AA 34011–2300 (or Balboa, Republic of Panama); and

(2) State in your letter that you are making a request under the Freedom of Information Act, and clearly mark the envelope ''Freedom of Information Act Request''. A request under 5 U.S.C. 552 which is not properly addressed and is not marked in this way shall not be considered to be received by the agency until it has actually been received by the Agency Records Officer.

(3) In your letter, reasonably describe the records you are seeking. Be as specific in describing the records as you can. Although it is not required, it will be helpful if, whenever possible, you supply in your letter specific information regarding dates, titles, file designations, the office where you believe the records may be found, and other information which may help to identify the records.

(b) The Panama Canal Commmission may request that you furnish information as to the purpose of your request. Such information is required to assist agency officials in categorizing your request in order to accurately assess fees.

[44 FR 75309, Dec. 19, 1979, as amended at 52 FR 31397, Aug. 20, 1987; 53 FR 16256, May 6, 1988; 59 FR 26122, May 19, 1994]

§9.7 How your Freedom of Information Act request will be handled.

(a) The official responsible for deciding whether your request will be granted is the Agency Records Officer. That official must make the decision and send you notification of it within ten working days after the Commission receives your request. In unusual circumstances, the Commission may extend the time for responding to your request. For details, see §9.10 of this part.

(b) If the Agency Records Officer denies your request, in whole or in part, the letters sent to you to notify you of this decision must:

(1) Tell you why the request is being denied;

(2) Tell you that you have the right, by appealing the decision, to require the agency to reconsider its decision; and

(3) Tell you how to make an appeal.

(c) If you request records or information which is in the files of the Commission but which originated in another Federal agency, the Agency Records Officer may refer your request to that agency. In that case, the Agency Records Officer will inform you that your request has been referred to the originating agency.

§ 9.8 How to make an appeal under the Freedom of Information Act.

(a) If you are not satisfied with the decision of the Agency Records Officer, you may require the Commission to reconsider that decision. This is called ''making an appeal.''

(b) To make an appeal, you must:

(1) Write to the Panama Canal Commission, Director, Office of Executive Administration, Unit 2300, APO AA 34011–2300 (or Balboa, Republic of Panama); and

(2) State in your letter that you are making an appeal under the Freedom of Information Act, and clearly mark the envelope ''Freedom of Information Act Appeal''; and

(3) Mail or deliver the letter of appeal within ten working days after you receive the letter from the Agency Records Officer.

(c) Although it is not required, it may be helpful if you clearly indicate in your appeal the reasons why you disagree with the decision on your request and your reasons for wanting the records.

[44 FR 75309, Dec. 19, 1979, as amended at 46 FR 48659, Oct. 2, 1981; 52 FR 31397, Aug. 20, 1987; 53 FR 16256, May 6, 1988; 59 FR 26122, May 19, 1994]

§ 9.9 How your Freedom of Information Act appeal will be handled.

(a) The official responsible for deciding whether to grant your appeal is the Director, Office of Executive Administration of the Panama Canal Commission. That official must make that decision and send you notification of it within 20 working days after receiving your appeal. In unusual circumstances, the Commission may extend the time for responding to your appeal. For details, see § 9.10 of this part.

(b) If the Director, Office of Executive Administration denies your appeal, in whole or in part, the letter sent to you to notify you of this decision must:

(1) Tell you why the appeal is being denied;

(2) Tell you that this denial is the Commission's final decision; and

(3) Tell you that you have the right to request a U.S. District Court to review the denial of your appeal, as provided by 5 U.S.C. 552(a)(4)(B), as amended.

[44 FR 75309, Dec. 19, 1979, as amended at 46 FR 48659, Oct. 2, 1981]

§ 9.10 How the Commission may extend the time to respond to your request or appeal.

(a) In unusual circumstances, the Commission may extend the time for making a decision about your request or about your appeal. If the Commission does extend the time, it will do so by sending you a written notice signed by the Agency Records Officer. The notice will:

(1) Tell you why it is necessary to extend the time;

(2) Tell you how long the time has been extended; and

(3) Tell you the date when you can expect the decision about your request or your appeal to be sent to you.

(b) The Commission may extend the time for making a decision about your request or your appeal by a total of ten working days. The extension period may be split between the request and the appeal, but it may not exceed ten working days overall.

(c) The unusual circumstances which may reasonably require an extension of time for the proper handling of your request or appeal are:

(1) The need to search for and collect the requested records from field facilities or other establishments that are separate from the office processing the request; or

(2) The need to search for, collect, and appropriately examine a voluminous quantity of separate and distinct

records which are demanded in a single request; or

(3) The need for consultation, which shall be conducted with all practicable speed, with another agency having a substantial interest in the determination of the request or among two or more components of the Commission having substantial subject matter interest in the request.

§ 9.11 Fees for Freedom of Information Act requests.

(a) The following are fees charged by the Commission for document search and reproduction.

(1) Search for records: $7.10 per hour of search conducted by clerical personnel, and $23.50 per hour of search conducted by supervisory or professional personnel.

(2) Search requiring computers: $185.94 for the first two hours or fraction of the first two hours; $92.97 for each additional hour.

(3) Copying: $0.13 per page for the first copy of a record. The word ''page'' refers to a paper copy of a standard agency size which is 8½″ x 11″ or 11″ x 14″. For additional copies, you will be charged the official Panama Canal Commmission tariff rate for reproduction.

(4) Converting microfilm to paper copy: $0.13 per page for the first copy of a record. For additional copies, you will be charged the official Panama Canal Commission tariff rate for reproduction. Microfilm search charges will be at the clerical rate.

(5) Duplication of tape recordings: (i) *Labor costs:* $10.65 per ½ hour for 40 channel tape recording; $7.30 per ½ hour for basic tape recording; $9.35 per ½ hour for video tape recording. Minimum charge for taping is ½ hour.

(ii) *Material costs:* No cost will be assessed to tapes if provided by requester. If agency furnishes tapes, the requester will be charged direct purchasing costs.

(6) Duplication of photographs: Black and white, up to 8″ x 10″, $2.55 per print; color, up to 8″ x 10″, $9.20 per print.

(7) Duplication of canal sounding and engineering charts, graphs, and drawings (reproducible and non-reproducible) at cost recovery rate.

(8) Other services: If there is no specific fee listed in this section for a service necessary for handling your request, you will be charged the official agency tariff for that service. If no tariff exists for that service, the Agency Records Officer is authorized to charge the direct cost to the Commission of that service.

(b) Review fees are chargeable only when a request is for a commercial use, as defined in § 9.12. Review fees will be charged in accordance with the search fee rates set forth in § 9.11(a)(1).

(c) If the Commission estimates that search charges are likely to exceed $25.00, and the requester has not previously agreed to pay fees as high as those anticipated, the agency will notify the requester of the estimated amount of fees, and offer the requester the opportunity to revise the request.

(d) The Panama Canal Commission may require a requester to pay fees in advance only if the estimated charges are likely to exceed $250.00, or the requester has previously failed to pay a fee in a timely fashion (i.e., within 30 days of the date of billing).

(1) If the requester has a history of prompt payment, and the estimated charges are likely to exceed $250.00, the Commission will notify the requester of the estimated cost and obtain satisfactory assurance of full payment.

(2) If the requester has no prior payment history, and the estimated charges are likely to exceed $250.00, the agency may require an advance payment of an amount up to the full amount of estimated charges.

(3) If the requester has a poor payment history, the agency may require advance payment of the full amount of the estimated fees, as well as any amount currently owed, plus interest on the delinquent amount, before the agency begins to process a new or pending request from that requester.

(4) When the agency acts under this subsection, the administrative time limits prescribed in §§ 9.7(a) and 9.9(a) will begin only after receipt of the required fee payments.

(e) If you wish to request a waiver or reduction of fees, you must do so in writing to the Chief, Administrative Services Division, Agency Records Officer, Panama Canal Commission, Unit

2300, APO AA 34011–2300. The Agency Records Officer may waive or reduce the fees if the official decides that providing the records you request would be in the public interest because it is likely to contribute significantly to public understanding of the operations or activities of the government, and is not primarily in the commercial interest of the requester. Requests for a waiver or reduction of fees shall be considered on a case-by-case basis.

(1) In order to determine whether disclosure of the information is in the public interest because it is likely to contribute significantly to public understanding of the operations or activities of the government, the Agency Records Officer will consider the following four factors:

(i) The subject of the request: Whether the subject of the requested records concerns the operations or activities of the government;

(ii) The informative value of the information to be disclosed: Whether the disclosure is likely to contribute to an understanding of government operations or activities;

(iii) The contribution to an understanding of the subject by the general public likely to result from disclosure: Whether disclosure of the requested information will contribute to public understanding; and

(iv) The significance of the contribution to public understanding: Whether the disclosure is likely to contribute significantly to public understanding of government operations or activities.

(2) In order to determine whether disclosure of the information is not primarily in the commercial interest of the requester, the Agency Records Officer will consider the following two factors:

(i) The existence and magnitude of a commercial interest: Whether the requester has a commercial interest that would be furthered by the requested disclosure; and, if so

(ii) The primary interest in disclosure: Whether the magnitude of the identified commercial interest of the requester is sufficiently large, in comparison with the public interest in disclosure, that disclosure is primarily in the commercial interest of the requester.

(3) The Agency Records Officer will not consider waiver or reduction of fees for requesters (persons or organizations) from whom unpaid fees remain due to the Agency for another information access request.

(4) The Agency's decision to refuse to waive or reduce fees as requested under this section may be appealed to the Director, Office of Executive Administration, Panama Canal Commission, Unit 2300, APO AA 34011–2300. Appeals should contain as much information and documentation as possible to support the request for a waiver or reduction of fees. The requester will be notified within thirty working days from the date on which the Agency received the appeal.

(f) This agency will assess interest charges on an unpaid bill starting on the 31st day following the day on which the bill was sent. Interest will be computed at the rate prescribed in Section 3717 of Title 31, United States Code, and will accrue from the date of the billing.

[52 FR 31397, Aug. 20, 1987, as amended at 53 FR 16256, May 6, 1988; 59 FR 26122, May 19, 1994]

§ 9.12 Definitions.

Commercial use refers to a request or a requester seeking information for a use or purpose that furthers the commercial, trade, or profit interests of the requester or the person on whose behalf the request is made.

Duplication refers to the process of making a copy of document necessary to respond to a Freedom of Information Act request. Such copies can take the form of paper copy, microfilm, audiovisual materials, or machine readable documentation (e.g., magnetic tape or disk), among others. The copy provided will be in a form that is reasonably usable by the requester.

Educational institution refers to a preschool, a public or private elementary or secondary school, an institution of graduate higher education, an institution of undergraduate higher education, an institution of professional education, and an institution of vocational education, which operates programs of scholarly research.

Non-commercial scientific institution refers to an institution that is not operated on a commercial basis and which is operated solely for the purpose of conducting scientific research, the results of which are not intended to promote any particular product or industry.

Representative of the news media refers to any person actively gathering news for an entity that is organized and operated to publish or broadcast news to the public. As used herein, the word ''news'' means information that is about current events or that would be of current interest to the public.

Review refers to the process of examining documents located in response to a request that is for a commercial use to determine whether any portion of any document located is permitted to be withheld. It also includes the time spent processing any documents for disclosure; i.e., doing all that is necessary to delete unreleasable portions and prepare documents for release. Review does not include time spent resolving general legal or policy issues regarding the application of exemptions.

Search time is the time spent by the agency to identify the documents requested and will be charged in accordance with § 9.11(a)(1) and (2).

[52 FR 31398, Aug. 20, 1987; 53 FR 16256, May 6, 1988]

§ 9.13 Classifying requests for fee purposes.

(a) When the Panama Canal Commission receives a request for documents that appears to be for commercial use, fees will be assessed for the total search time, review time, and all duplication of the documents. Requestors must reasonably describe the records sought. When the agency has reasonable cause to doubt the stated use of the documents, or where the use is not clear from the request itself, the agency can seek additional clarification. Requesters should note that the Panama Canal Commission may assess fees for search and review even if no documents are determined to be releasable under the Freedom of Information Act.

(b) Educational institution requesters will be provided the first 100 pages of duplication without charge and will not be charged for search time. To be eligible for this reduction in fees, the requester must show that the request is being made under the auspices of a qualifying institution and that the records are being sought to further scholarly research and not for commercial use. The requester must reasonably describe the records sought.

(c) Non-commercial scientific institution requesters will be provided the first 100 pages without charge and will not be charged for search time. To be eligible for this reduction in fees, the requester must show that the request is being made under the auspices of a qualifying institution and that the records are being sought to further scientific research and not for commercial use. The requester must reasonably describe the records sought.

(d) Representatives of the news media will be provided the first 100 pages without charge and will not be charged for search time. To be eligible for reduction in fees, the requester must meet the criteria prescribed in § 9.12 and the request must not be for commercial use. A request for records supporting the news dissemination function of the requester will not be considered to be a request that is for a commercial use. The requester must reasonably describe the records sought.

(e) For all other requesters who do not fit into the above categories, fees will be charged which recover the full reasonable direct cost of searching for and reproducing records that are responsive to the request, except that the first 100 pages of reproduction and the first two hours of search time will be furnished without charge. The requester must reasonably describe the records sought.

(f) Those requesters searching for records about themselves will be treated under the Privacy Act of 1974 and will only be charged for reproduction costs.

(g) A requester may not file multiple requests solely in order to avoid payment of fees. When the agency reasonably believes that a requester is attempting to separate a request into a series of requests for the purpose of evading the assessment of fees, the

agency may aggregate any such requests and charge accordingly.

[52 FR 31398, Aug. 20, 1987; 53 FR 16256, May 6, 1988]

§ 9.14 Current index.

(a) The Commission maintains and will make available for public inspection and copying a current index of the agency's opinions, policy statements, administrative staff manuals, and instructions to staff that affect a member of the public.

(b) The Commission has decided that it is not necessary to publish this index.

(c) On request, the Commission will provide copies of this index to members of the public. The charges for the copies will be no greater than those set out in § 9.11.

[44 FR 75309, Dec. 19, 1979. Redesignated at 52 FR 31397, Aug. 20, 1987; 53 FR 16256, May 6, 1988]

§ 9.15 Annual report.

On or before March 1 of each calendar year, the Panama Canal Commission sends to both Houses of Congress a report of its activities in connection with the Freedom of Information Act during the preceding calendar year. The Freedom of Information Act requires each agency to make this report and to include in it such information as: how many requests were denied and why; how many denials were appealed and the result of those appeals; the name and title of each official who denied a request; and other information showing how the agency administered the Freedom of Information Act during the period covered by the report.

[44 FR 75309, Dec. 19, 1979. Redesignated at 52 FR 31397, Aug. 20, 1987; 53 FR 16256, May 6, 1988]

§ 9.16 Predisclosure notification procedures for confidential commercial information.

(a) *In general.* Confidential commercial information provided to the Panama Canal Commission by a submitter shall not be disclosed pursuant to a Freedom of Information Act (FOIA) request except in accordance with this section. The following definitions apply:

(1) *Confidential commercial information* means records provided to the Commission by a submitter that arguably contain material exempt from release under Exemption 4 of the Freedom of Information Act, 5 U.S.C. 552(b)(4), because disclosure could reasonably be expected to cause substantial competitive harm.

(2) *Submitter* means any person or entity who provides confidential commercial information to the Commission. The term ''submitter'' includes, but is not limited to, corporations, state governments, and foreign governments.

(b) *Notice to submitters.* The Panama Canal Commission shall provide a submitter with prompt notice of receipt of a Freedom of Information Act request encompassing its confidential commercial information whenever required in accordance with paragraph (c) of this section, and except as provided in paragraph (g) of this section. The written notice shall either describe the exact nature of the information requested or provide copies of the records or portions of records containing the requested information.

(c) *When notice is required.* (1) For confidential commercial information submitted prior to January 1, 1988, the Panama Canal Commission shall provide a submitter with notice of receipt of a FOIA request whenever:

(i) the records are less than 10 years old and the information has been designated by the submitter as confidential commercial information;

(ii) The Panama Canal Commission has reason to believe that disclosure of the information could reasonably result in commercial or financial harm to the submitter; or

(iii) The information is subject to the prior express commitment of confidentiality given by the Commission to the submitter.

(2) For confidential commercial information submitted on or after January 1, 1988, the Commission shall provide a submitter with notice of receipt of a FOIA request whenever:

(i) The submitter has in good faith designated the information as commercially or financially sensitive; or

(ii) The Commission has reason to believe that disclosure of the information

could reasonably result in commercial or financial harm to the submitter.

(3) Notice of a request for confidential commercial information falling within paragraph (c)(2)(i) of this section shall be required for a period of not more than ten years after the date of submission unless the submitter requests, and provides acceptable justification for, a specific notice period of greater duration.

(4) Whenever possible, the submitter's claim of confidentiality shall be supported by a statement or certification by an officer or authorized representative of the company that the information in question is in fact confidential commercial or financial information and that the information has not been disclosed to the public.

(5) When notice is given to a submitter under this section, the Commission shall at the same time provide written notice to the requester that it is affording the submitter a reasonable period of time within which to object to disclosure and that, therefore, there will be a delay in responding to the request because of the overseas location of the agency and the time requirements to obtain responses from the submitters.

(d) *Opportunity to object to disclosure.* (1) The notice required by paragraph (b) of this section shall afford a submitter ten (10) working days within which to provide the Commission with a detailed statement of any objection to disclosure. Such statement must specify all grounds for withholding information under any exemption of the Freedom of Information Act and, in the case of Exemption 4, must demonstrate why the information is contended to be a trade secret or commercial or financial information which is considered privileged or confidential and capable of causing competitive damage if disclosed. Information provided by a submitter pursuant to this paragraph may itself be subject to disclosure under the Freedom of Information Act.

(e) *Notice of intent to disclose.* The Commission will carefully consider the submitter's objections to release prior to determining whether or not to disclose the information. Whenever the Commission decides to disclose information over the objection of the submitter, the Commission will forward a written notice to the submitter which shall include:

(1) A statement of the reasons for which the submitter's disclosure objections were not sustained;

(2) A description of the confidential commercial information to be disclosed; and,

(3) A specific disclosure date, which shall be ten (10) working days after the notice of the final decision to release the requested information has been mailed to the submitter.

(4) When notice is given to a submitter under this section, the Commission will notify the requester that such notice has been given to the submitter and the proposed date for disclosure.

(f) *Notice of lawsuit.* (1) Whenever a requester brings legal action seeking to compel disclosure of information covered by paragraph (c) of this section, the Commission shall promptly notify the submitter.

(2) Whenever a submitter brings legal action seeking to prevent disclosure of information covered by paragraph (c) of this section, the Commission shall notify the requester.

(g) *Exception to notice requirement.* The notice requirements of paragraph (c) of this section shall not apply if:

(1) The Panama Canal Commission determines that the information should not be disclosed;

(2) The information has been published or otherwise officially made available to the public;

(3) Disclosure of the information is required by law (other than 5 U.S.C. 552); or

(4) The information was acquired in the course of a lawful investigation of a possible violation of criminal law.

[56 FR 11373, Mar. 18, 1991]

Subpart B—Vital Statistics Records

§9.31 Definitions.

As used in this subpart:

Live Birth means the birth of a child who shows evidence of life after the child is entirely outside the mother.

Stillbirth means a birth after 20 weeks of gestation which is not a live birth.

Physician means a person legally authorized to practice medicine before

October 1, 1979, in the area then known as the Canal Zone.

Vital Statistics includes the registration, preparation, transcription and preservation of data pertaining to marriages, births, adoptions, legitimations, deaths, stillbirths, and data incidental thereto.

Vital Statistics Unit means the organizational unit charged by the Administrator of the Panama Canal Commission with the function of vital statistics.

§ 9.32 Administration.

The Vital Statistics Unit shall administer this subpart, under the supervision of the Administrator or his designee.

§ 9.33 Functions of the Vital Statistics Unit.

The Vital Statistics Unit is the keeper of the vital statistics records of the Canal Zone Government. Some of the functions previously performed by that unit were discontinued on October 1, 1979, when the Canal Zone and its civil government ceased to exist. The Vital Statistics Unit now performs the residual functions of recordkeeping; i.e., it is limited to performing the following:

(a) Maintaining all vital statistics records of the Canal Zone Government.

(b) Performing the vital statistics functions as defined in §9.31 of this part for those events which occurred in the Canal Zone before October 1, 1979, and which were not previously registered in that unit. This includes the delayed registration of a birth that occurred prior to October 1, 1979.

(c) The alteration of records which are filed in that unit.

(d) The issuance of copies of documents filed in that unit.

(Panama Canal Treaty of 1977 and related agreements and Pub. L. 96–70, 93 Stat. 452)

§ 9.34 Supplementary certificate upon adoption.

Upon receipt of a certified copy of an order or decree of adoption, the Vital Statistics Unit shall prepare a supplementary certificate in the new name of the adopted person and shall seal and file the original certificate of birth with such certified copy attached thereto. The sealed documents may be opened only upon the demand of the adopted person, if of legal age, or by an order of court. Upon receipt of a certified copy of a court order of annulment of the adoption, the original certificate shall be restored to its original place in the file.

§ 9.35 New birth certificate upon legitimation.

In cases of legitimation the Vital Statistics Unit, upon receipt of proof thereof, shall prepare a new certificate of birth in the new name of the legitimated child. The evidence upon which the new certificate is made and the original certificate shall be sealed and filed and may be opened only upon the demand of the person involved, if of legal age, or by an order of court.

CROSS REFERENCE: Legitimation of child, see 8 P.C.C. 335, 387, 76A Stat. 689, 691. See also 7 P.C.C. 576, 76A Stat. 571.

§ 9.36 Delayed filing of birth certificate.

(a) When a live birth occurred in the Canal Zone (prior to October 1, 1979), a certificate of live birth should have been filed with the Vital Statistics Unit within five days after the birth by the physician, midwife, or other legally authorized person in attendance at the birth or, if the birth was not so attended, by one of the parents. If a certificate of live birth in the Canal Zone was not filed during that time, it may still be possible to file a delayed certificate of birth by following the procedure set forth in paragraph (b) of this section.

(b) A delayed certificate of live birth may be filed upon the submission to, and receipt by, the Vital Statistics Unit of such evidence, in the form of affidavits or otherwise, as the Vital Statistics Unit deems sufficient to establish satisfactorily the truth of the facts alleged in support of the request for delayed filing. Certificates accepted more than six months after the time prescribed for filing in paragraph (a) of this section shall contain the date of the delayed filing and shall be marked ''delayed.'' A summary statement of the evidence submitted in support of the acceptance for delayed filing shall be endorsed on the certificate. Such

evidence shall be kept in a special permanent file.

§9.37 Altered certificates.

Certificates of marriage, birth, stillbirth, or death filed in the Vital Statistics Unit may be altered upon the submission to, and receipt by, the Vital Statistics Unit of such evidence, in the form of affidavits or otherwise, as that unit deems sufficient to establish satisfactorily the truth of the facts alleged in support of the request for alteration. Certificates which are altered after being filed shall contain the date of the alteration and shall be marked ''altered.'' A summary statement of the evidence submitted in support of the acceptance for alteration shall be endorsed on the certificate. Such evidence shall be kept in a special permanent file.

§9.38 Certified copies of records.

Subject to the restrictions contained in §9.39, a certified copy of a certificate on file or any part thereof shall be furnished to any applicant upon request. The person designated by the Administrator or by the Administrator's designee to act as Vital Statistics Clerk shall be the person to certify copies of such certificates or parts thereof. Charges shall be made for certified copies of vital statistics records at the rate prescribed in the official Panama Canal Commission tariff.

§9.39 Disclosure of records.

Inspection of a vital statistics record is not permitted, and a certified copy of a certificate or part thereof may not be issued, unless the Vital Statistics Unit is satisfied that the applicant has a direct and legitimate interest in the matter recorded or that the information therein contained is necessary for the determination of personal or property rights.

PART 10—ACCESS TO INFORMATION ABOUT INDIVIDUALS

Sec.

10.1 Purpose of this part.
10.2 The Privacy Act of 1974.
10.3 Definitions.
10.4 When this part applies.
10.5 How to make a Privacy Act request.
10.6 How to identify yourself.
10.7 How your Privacy Act request will be handled.
10.8 When, where, and under what conditions you may review the records.
10.9 Special procedures for medical records.
10.10 How to request review of a system manager's denial of access.
10.11 Fees for Privacy Act requests.
10.12 How to request amendment of your record under the Privacy Act.
10.13 How your Privacy Act request for amendment will be handled.
10.14 How to appeal a refusal to amend a record under the Privacy Act.
10.15 How your Privacy Act appeal will be handled.
10.16 Rights of parents and legal guardians.
10.17 Conditions under which the Commission may disclose an individual's record to other persons.
10.18 Accounting of certain disclosures.
10.19 Records about deceased persons.
10.20 Penalties for noncompliance with the Act.
10.21 General exemptions.
10.22 Specific exemptions.
APPENDIX A TO PART 10—GENERAL ROUTINE USES

AUTHORITY: 5 U.S.C. 552a.

SOURCE: 44 FR 75312, Dec. 19, 1979, unless otherwise noted.

§10.1 Purpose of this part.

The purpose of this part is to establish Panama Canal Commission policies and procedures for implementing the Privacy Act of 1974 (Pub. L. 93–579), and particularly the provisions of 5 U.S.C. 552a.

§10.2 The Privacy Act of 1974.

The Privacy Act of 1974 (referred to in this part as ''the Privacy Act'') is a law which provides safeguards against the invasion of an individual's personal privacy. The Privacy Act creates a procedure for an individual to request access to or amendment of a record about himself or herself that is maintained by an agency of the United States Government. It also places certain restrictions on the disclosure of records containing information about an individual to other persons. The rest of the rules in this part:

(a) Explain how you may request access to or amendment of records about yourself that are maintained by the Panama Canal Commission (referred to in this part as ''the Commission'' or ''the agency'');

(b) Explain the conditions under which the Commission may disclose information about an individual to others without the individual's consent; and

(c) List the systems of records maintained by the Commission which are exempt from certain provisions of the Privacy Act, including the provisions for access and amendment.

§ 10.3 Definitions.

(a) All terms used in this part which are defined in the Privacy Act (5 U.S.C. 552a(a)) shall have the same meanings as they do in that Act.

(b) *Agency Records Officer* means the Chief, Administrative Services Division, Panama Canal Commission.

(c) *Director of Executive Administration* means the Director, Office of Executive Administration of the Panama Canal Commission.

(d) *System Manager* means the official designated in the most recent Notice of Systems of Records published in the FEDERAL REGISTER, as having responsibility for a given system of records.

[44 FR 75312, Dec. 19, 1979, as amended at 46 FR 48659, Oct. 2, 1981]

§ 10.4 When this part applies.

(a) This part applies only to information about individuals that is maintained by the Panama Canal Commission in a system of records which has been described in a notice published in the FEDERAL REGISTER. This means that these regulations apply only to information about an individual that can be retrieved from a group of records by the individual's name or other personal identifier (such as an employee identification number).

(b) Where another agency (such as the Office of Personnel Management) has published a notice describing a system of records that is partially under the control of the Panama Canal Commission, the Privacy Act regulations of that agency take precedence over the regulations in this part.

§ 10.5 How to make a Privacy Act request.

(a) You may find it helpful to review the descriptions of Commission systems of records, as published in the FEDERAL REGISTER, before you make a request. You may review these in the annual compilation of ''Privacy Act Issuances,'' available at libraries, or, upon request, at the Records Management Branch, Administration Building, Balboa Heights, Republic of Panama.

(b) To find out whether a particular system of records contains information about you, or to request access to records about yourself, you must:

(1) Write or visit the system manager or the Agency Records Officer. The title and address of the system manager are given in the Notice of System of Records published in the FEDERAL REGISTER. The office of the Agency Records Officer is located in the Administration Building, Balboa Heights, Republic of Panama, and that official's mailing address is: Panama Canal Commission, Agency Records Officer, Unit 2300, APO AA 34011–2300 (or Balboa, Republic of Panama).

(2) Reasonably identify the system of records or the type of information, or records, you are interested in. Be as specific as you can. If you do not know which system of records is involved, it will be helpful if you identify the office where you believe the records may be located.

(3) Adequately identify yourself in accordance with the requirements contained in § 10.6 of this part.

(c) If you make your request in writing, state in your letter that you are making a request under the Privacy Act and clearly mark the envelope with the words ''Privacy Act Request.'' A request under 5 U.S.C. 552a which is not properly addressed and is not marked in this way shall not be considered to have been received by the agency until it has actually been received by the system manager or the Agency Records Officer.

[44 FR 75312, Dec. 19, 1979, as amended at 59 FR 26123, May 19, 1994]

§ 10.6 How to identify yourself.

(a) If you make your request in person, or if you wish to review your records in person, you must identify yourself to the system manager or the Agency Records Officer (or to a person designated by one of those officials) by showing at least one identification document containing your picture (for example, employee identification card,

driver's license, passport), or at least two identification documents containing your signature, or other identification acceptable to the official concerned.

(b) If you make your request in writing, you must supply information that will help to verify your identity (for example, signature, employee identification number, date and place of birth), and you may also be required to provide the certificate of a notary public or other official authorized to administer oaths.

(c) Whether making your request in person or in writing, if you cannot identify yourself to the satisfaction of the system manager or the Agency Records Officer (or the person designated by one of those officials), you may be asked to make and sign a written statement asserting your identity and indicating that you understand that knowingly and willfully requesting or obtaining access to any record about another individual under false pretenses is a misdemeanor punishable by a fine of up to $5,000 (5 U.S.C. 552a(i)(3)).

§10.7 How your Privacy Act request will be handled.

(a) The system manager or the Agency Records Officer will acknowledge receipt of your request within ten working days. At the same time, or as soon as possible after acknowledging receipt, that official will:

(1) Tell you that a record about you is maintained in the system of records you identified and tell how you may review it, or get a copy; or

(2) Tell you that no record about you is maintained in the system of records you identified; or

(3) Tell you that your inquiry cannot be answered or your request cannot or will not be granted because you have not adequately identified yourself or the system of records; because the system of records in question is exempt from the access provisions of the Privacy Act; or because the record or system of records in question is not under the control of the Commission.

(b) When the system manager or the Agency Records Officer makes a decision to grant you access to the records you requested, you normally may see the records or get copies of them right away. If, for any reason, the records cannot be provided immediately, that official will arrange with you a mutually acceptable time and place for you to review and copy the records. If that official cannot make the records available to you within 30 working days of receipt of your request, that official will advise you in writing of the reason for the delay.

§10.8 When, where, and under what conditions you may review the records.

(a) If you want to review your records in person, you will normally be required to go during regular working hours to the location specified in the Notice of the System of Records or to the office of the Agency Records Officer, in the administration Building, Balboa Heights, Republic of Panama. If you cannot go in person during regular working hours, you should telephone or write the system manager or the Agency Records Officer so that appropriate arrangements can be made for you to review the records.

(b) You must identify yourself to the system manager or the Agency Records Officer (or to a person designated by one of those officials) in accordance with the requirements contained in §10.6 of this part.

(c) If you have been told that you may review your records in person, you may, upon your request, be accompanied by a person of your choosing. You will however, have to provide the system manager with a written signed statement authorizing disclosure of the records about you to that person, and authorizing discussion of your records in the presence of that person.

(d) You may be shown a copy of a record rather than the original record itself when the record is not maintained at, or cannot be transferred to, a location which is accessible to you. In that event, you will be charged for the copies only if you choose to retain them. If copies are made at your request, the agency will charge you the cost of making the copies, as stated in §10.11 of this part.

(e) No one shall be allowed to inspect original agency records except under

the immediate supervision of the system manager, or the Agency Records Officer, or a person designated by one of those officials.

§ 10.9 Special procedures for medical records.

(a) If you request medical records about yourself, including psychiatric and psychological records, the records will be made available to you only after the Director of Health and Safety, or that official's designee, determines that release of the records would not be likely to have an adverse effect on you. If they are not made available to you, upon your written request the medical records which are not otherwise exempt from disclosure may be reviewed by a licensed medical practitioner designated by you.

(b) School records of a psychological nature may be shown to the student who is the subject of the records or to the parent or guardian of the student only if the Director of Health and Safety, or that official's designee, determines that the release would not be likely to have an adverse effect on the individual who is the subject of the records.

§ 10.10 How to request review of a system manager's denial of access.

(a) If the system manager denies your request for records, in whole or in part, you may ask the Agency Records Officer to review that decision. The denial is not considered a final agency decision unless it has been reviewed and confirmed in writing by the Agency Records Officer.

(b) To request review of a system manager's denial, you must:

(1) Write to the Panama Canal Commission, Agency Records Officer, Unit 2300, APO AA 34011–2300 (or Balboa, Republic of Panama); and

(2) State in your letter that you are requesting review of the system manager's denial and clearly mark the envelope ''Privacy Act Request for Review''; and

(3) Mail or deliver the request for review within ten working days after you receive the system manager's denial.

(c) Although it is not required, it may be helpful if you state in your request for review the reasons why you disagree with the decision on your request for access and your reasons for wanting the records.

[44 FR 75312, Dec. 19, 1979, as amended at 59 FR 26123, May 19, 1994]

§ 10.11 Fees for Privacy Act requests.

(a) The fees for copies of records made at your request under this section will be the same as the fees provided in § 9.11(a) (3), (4), (5), (6), (7); (c); and (e) of this title for copies of materials provided under the Freedom of Information Act.

(b) If your request for copies of records or portions of records is expected to involve fees of more than $50, the Commission will not treat your request as having been received until:

(1) The Commission has sent you a written notification of the estimated fees; and

(2) You agree in writing to pay at least the estimated fees; and

(3) You pay part of the estimated fees in advance, if the agency requires such a deposit before it will begin to copy the records you have requested.

§ 10.12 How to request amendment of your record under the Privacy Act.

After you have reviewed your record, you may ask the Commission to correct or amend any portion of the record that you believe is not accurate, timely, relevant, or complete. To make a request for amendment, you must:

(a) Write to the Panama Canal Commission, Agency Records Officer, Unit 2300, APO AA 34011–2300 (or Balboa, Republic of Panama).

(b) State in your letter that you are requesting amendment of a record under the Privacy Act, and clearly mark the envelope ''Privacy Act Request for Amendment.'' A request for amendment of a record under 5 U.S.C. 552a which is not properly addressed and is not marked in this way shall not be considered to be received by the Commission until it has actually been received by the Agency Records Officer.

(c) In your letter, identify the system of records involved, if you can, and identify the particular record or portion of the record you wish to have corrected or amended. If possible, attach a copy of the record in question.

(d) Explain in your letter why you believe the record or portion of the record is not accurate, timely, relevant, or complete, and provide any evidence available to support your request.

(e) Include in your letter any other information that may be necessary for proper processing of your request.

[44 FR 75312, Dec. 19, 1979, as amended at 59 FR 26123, May 19, 1994]

§10.13 How your Privacy Act request for amendment will be handled.

(a) The Agency Records Officer (or that official's designee) will decide whether your request for amendment of a record should be granted. That official (or the designee) will acknowledge receipt of your request within ten working days and will either notify you of the decision or tell you when you can expect to have the decision. If a decision cannot be made within 30 working days of the receipt of your request, the Agency Records Officer (or the designee) will advise you in writing of the circumstances causing the delay.

(b) If your request for amendment is granted, in whole or in part:

(1) The Agency Records Officer (or that official's designee) will notify you of this decision;

(2) The system manager will promptly correct the record; and

(3) Where an accounting of disclosures has been maintained, the system manager will advise all previous recipients of the record that the correction has been made.

(c) If your request for amendment is denied, in whole or in part, the Agency Records Officer (or that official's designee) will notify you of this decision and will:

(1) Tell you why the request is being denied;

(2) Tell you that you have the right to request further review by appealing the decision; and

(3) Tell you how to make an appeal.

§10.14 How to appeal a refusal to amend a record under the Privacy Act.

(a) If the Agency Records Officer (or that official's designee) has denied your request to amend a record, you may request the Executive Secretary to review that decision. This is called ''making an appeal.''

(b) To make an appeal, you must:

(1) Write to the Panama Canal Commission, Director, Office of Executive Administration, Unit 2300, APO AA 34011–2300 (or Balboa, Republic of Panama); and

(2) State in your letter that you are appealing a denial of a request for amendment under the Privacy Act, and clearly mark the envelope ''Privacy Act Appeal''; and

(3) Mail or deliver the letter of appeal within ten working days after you receive the initial agency denial.

[44 FR 75312, Dec. 19, 1979, as amended at 46 FR 48659, Oct. 2, 1981; 59 FR 26123, May 19, 1994]

§10.15 How your Privacy Act appeal will be handled.

(a) The official responsible for deciding whether to grant your appeal is the Director of Executive Administration of the Panama Canal Commission. The Director of Executive Administration will review the refusal to amend your record and will advise you of his decision within 30 working days or receipt of your appeal.

(b) If the Director of Executive Administration grants your appeal, in whole or in part:

(1) That official will notify you of the decision;

(2) The system manager will promptly correct the record; and

(3) Where an accounting of disclosures has been maintained, the system manager will advise all previous recipients of the record that the correction has been made.

(c) If the Director of Executive Administration denies your appeal, in whole or in part, the letter sent to notify you of this decision must:

(1) Tell you why the appeal is being denied;

(2) Tell you that this denial of your appeal is a final agency decision;

(3) Tell you that you have the right to file a concise statement of your reasons for disagreeing with the decision of the agency; and

(4) Tell you that you have the right to request a U.S. District Court to review this denial of your appeal, as provided by 5 U.S.C. 552a(g).

(d) The Administrator of the Panama Canal Commission may extend the 30-working-day period specified in paragraph (a) of this section for good cause shown. In that case, the Agency Records Officer will notify you in writing of the reason for the delay and will tell you when you can expect a decision on your appeal.

(e) If you choose to file a concise statement of your reasons for disagreeing with the agency's refusal to amend your record:

(1) The system manager shall cause a notation to be made on the disputed portion of the record;

(2) Copies of your statement of disagreement will be provided to anyone to whom the disputed record is subsequently disclosed and (to the extent that an accounting of disclosures has been maintained) to any previous recipients of the disputed record; and

(3) The Commission may, at its discretion, make a brief summary of its reasons for not amending the record and may provide this summary, along with your statement of disagreement, to previous or subsequent recipients of the disputed record.

[44 FR 75312, Dec. 19, 1979, as amended at 46 FR 48659, Oct. 2, 1981]

§ 10.16 Rights of parents and legal guardians.

The parent of legal guardian of a minor or the legal guardian of an individual who has been declared incompetent may request access to, or amendment of, a record on behalf of that individual. To do so, a parent will be required to show a certified or authenticated copy of the minor's birth certificate, and a legal guardian will be required to show a certified or authenticated copy of the court order establishing guardianship. In some cases, the parent or legal guardian of a minor may be asked to provide evidence that the minor is in the parent's or guardian's custody, that the minor has consented to disclosure of the information to the parent or guardian, or that the parent or guardian has authority to act on the minor's behalf.

§ 10.17 Conditions under which the Commission may disclose an individual's record to other persons.

(a) The Commission shall not disclose information about an individual that is contained in one of its systems of records to any person or to another agency, except by written request of, or with the prior written consent of, the individual who is the subject of the record, unless the disclosure is authorized by paragraph (b) of this section or is required by other applicable law.

(b) Under 5 U.S.C. 552a, the Commission may disclose information contained in its systems of records, without the consent of the individual who is the subject of the record, if the disclosure of the information, or record, would be:

(1) To the parent or legal guardian of any minor, or to the legal guardian of any individual who has been declared to be incompetent by a court of competent jurisdiction, where such person is acting on the individual's behalf (5 U.S.C. 552a(h));

(2) To those officers and employees of the Commission who have a need for the information in the performance of their duties (5 U.S.C. 552a(b)(1));

(3) Required under 5 U.S.C. 552, the Freedom of Information Act (5 U.S.C. 552a(b)(2));

(4) For a routine use as defined in 5 U.S.C. 552a(a)(7) and as described for all systems of records in Appendix A of this part and for specific systems of records in the Notice of Systems of Records published in the FEDERAL REGISTER (5 U.S.C. 552a(b)(3));

(5) To the Bureau of the Census for purposes of planning or carrying out a census or survey or related activity under the provisions of Title 13, U.S. Code (5 U.S.C. 552a(b)(4));

(6) To a recipient who has provided the Commission with advance adequate written assurance that the record will be used solely as a statistical research or reporting record, and the record is to be transferred in a form that is not individually identifiable (5 U.S.C. 552a(b)(5));

(7) To the National Archives of the United States as a record which has sufficient historical or other value to warrant its continued preservation by the United States Government, or for

evaluation by the Administrator of General Services or that official's designee to determine whether the record has such value (5 U.S.C. 552a(b)(6));

(8) To another agency or to an instrumentality of any governmental jurisdiction within or under the control of the United States for a civil or criminal law enforcement activity if the activity is authorized by law, and if the head of the agency or instrumentality has made a written request to the Commission specifying the particular portion desired and the law enforcement activity for which the record is sought (5 U.S.C. 552a(b)(7));

(9) To a person pursuant to a showing of compelling circumstances affecting the health or safety of an individual, if upon such disclosure notification is transmitted to the last known address of such individual (5 U.S.C. 552a(b)(8));

(10) To either House of Congress, or, to the extent of matter within its jurisdiction, any committee or subcommittee thereof, any joint committee of Congress or subcommittee of any such joint committee (5 U.S.C. 552a(b)(9));

(11) To the Comptroller General, or any of his authorized representatives, in the course of the performance of the duties of the General Accounting Office (5 U.S.C. 552a(b)(10)); or

(12) Pursuant to the order of a court of competent jurisdiction (5 U.S.C. 552a(b)(11)).

§10.18 Accounting of certain disclosures.

(a) The system manager or his designee shall keep an accurate accounting of each disclosure of personal information about an individual from a system of records under his control which is made in accordance with §10.17(b) of this part, except if that disclosure is to officers and employees of the Commission (§10.17(b)(2)) or is required under the Freedom of Information Act (§10.17(b)(3)).

(b) This accounting of disclosure shall include:

(1) The date, nature, and purpose of each such disclosure; and

(2) The name and address of the person or agency to whom the disclosure is made.

(c) The system manager shall retain this accounting of disclosure for at least five years after the disclosure or for the life of the record, whichever is longer.

(d) The Commission shall make the accounting of disclosure available to the individual named in the record, at that individual's request, except when the disclosure was made under §10.17(b)(8) of this part or when the record in question is exempt from the access provisions of the Privacy Act under §§10.21 and 10.22 of this part. An individual may request access to the accounting of disclosure by the procedure for requesting access to records that is explained in §§10.5 through 10.10 of this part.

§10.19 Records about deceased persons.

A record about a deceased person is not covered by the rules in this part, except to the extent that the deceased person's record contains information about a living individual. In disclosing information about a deceased person, the Commission will make every effort to avoid any infringement of the privacy rights of a living individual.

§10.20 Penalties for noncompliance with the Act.

Subsections (g) and (i) of 5 U.S.C. 552a provide civil remedies and criminal penalties for noncompliance with the provisions of the Privacy Act of 1974 (Pub. L. 93–579) or regulations implementing that Act. In addition, adverse or disciplinary action may be taken against any officer or employee who willfully or negligently fails to comply with the requirements of the Privacy Act or the regulations in this part.

§10.21 General exemptions.

(a) The following systems of records are eligible for exemption under 5 U.S.C. 552a(j)(2) because each system is maintained by a component of the agency, or subcomponent, which performs as its principal function the enforcement of criminal laws, and which contains investigatory material compiled for criminal law enforcement purposes. Accordingly, these systems are exempt from the following sections of 552a of 5 U.S.C.: (c) (3) and (4); (d); (e)

(1), (2) and (3); (e)(4) (G) and (H); (e) (5); (e)(8); (f); (g); and (h).

(1) PCC/GSCP–2, Canal Protection Division Incident Report Files;

(2) PCC/OIG–1, Investigative Files of the Office of Inspector General;

(3) PCC/OIG–2, Allegation/Complaint Files of the Office of Inspector General;

(4) PCC/OIG–3, Cash Audit Files.

(b) The systems of records listed below, although no longer actively in use, continue to be subject to general exemption pursuant to 5 U.S.C. 552a(j)(2) because they were compiled by a component, or subcomponent, of the agency which performed as its principal function the enforcement of criminal laws, and which contain investigatory material compiled for criminal law enforcement purposes. Accordingly, the following systems of records are exempt from subsections (c)(3) and (4); (d); (e)(1), (2) and (3); (e)(4) (G) and (H); (e)(5); (e)(8); (f); (g); and (h) of 5 U.S.C. 552a:

(1) PCC/AEPR–1, Probation and Parole Unit Child Custody Reports;

(2) PCC/AEPR–2, Presentence and Preparole Investigation Reports;

(3) PCC/AEPR–3, Probation and Parole Unit Statistical File;

(4) PCC/GSPL–1, Law Enforcement Case Report File;

(5) PCC/GSPL–2, Police Headquarters Confidential File;

(6) PCC/GSPL–3, Detective Confidential Files;

(7) PCC/GSPL–4, Convict Files;

(8) PCC/GSPL–6, Police Photo Files;

(9) PCC/GSPL–7, Fingerprint File;

(10) PCC/GSPL–10, Master Name File;

(c) Exemptions from the particular subsections are justified for the following reasons:

(1) From (c)(3) because release of an accounting of disclosures to an individual who is the subject of an investigation could reveal the nature and scope of the investigation and could result in the altering or destruction of evidence, improper influencing of witnesses and other evasive action that could impede or compromise the investigation.

(2) From (c)(4) because this subsection is inapplicable to the extent that an exemption is being claimed for subsection (d).

(3) From subsection (d) because access to the records contained in these systems would inform the subject of a criminal or civil investigation, matter or case of the existence of such, and provide the subject with information that might enable him or her to avoid detection, apprehension or legal obligations, and present a serious impediment to law enforcement and other civil remedies. Amendment of the records would impose an impossible administrative burden by requiring investigations to be continuously reinvestigated.

(4) From subsection (e)(1) because it is often impossible to determine relevance or necessity of information in the early stages of an investigation. The value of such information is a question of judgment and timing; what appears relevant and necessary when collected may ultimately be evaluated and viewed as irrelevant and unnecessary to an investigation. In addition, information may be obtained concerning the violation of laws other than those within the scope of its jurisdiction. In the interest of effective law enforcement, information should be retained because it may aid in establishing patterns of unlawful activity and provide leads for other law enforcement agencies. Further, in obtaining evidence during an investigation, information may be provided which relates to matters incidental to the main purpose of the investigation but which may be pertinent to the investigative jurisdiction of another agency. Such information cannot readily be identified.

(5) From subsection (e)(2) because in a law enforcement investigation it is usually counterproductive to collect information to the greatest extent practicable directly from the subject thereof. It is not always feasible to rely upon the subject of an investigation as a source for information which may implicate him or her in illegal activities. In addition, collecting information directly from the subject could seriously compromise an investigation by prematurely revealing its nature and scope, or could provide the subject with an opportunity to conceal criminal activities, or intimidate potential sources, in order to avoid apprehension.

(6) From subsection (e)(3) because providing such notice to the subject of an investigation, or to other individual sources, could seriously compromise the investigation by prematurely revealing its nature and scope, or could inhibit cooperation, or permit the subject to evade apprehension.

(7) From (e)(4) (G) and (H); (f); (g); and (h) because these provisions concern an individual's access to records which concern him and such access to records in this system would compromise investigations, reveal investigatory techniques and confidential informants, and invade the privacy of private citizens who provide information in connection with a particular investigation.

(8) From subsection (e)(5) because in the collection of information for law enforcement purposes it is impossible to determine what information is accurate, relevant, timely, and complete. With the passage of time, seemingly irrelevant or untimely information may acquire new significance as further investigation brings new details to light and the accuracy of such information can only be determined in a court of law. The restrictions of subsection (e)(5) would restrict the ability of trained investigators to exercise their judgment in reporting on investigations and impede the development of information necessary for effective law enforcement.

(9) From subsection (e)(8) because the application of this provision could prematurely reveal an ongoing criminal investigation to the subject of the investigation and could reveal investigative techniques, procedures or evidence.

[59 FR 9089, Feb. 25, 1994]

§10.22 Specific exemptions.

(a) The following systems of records are eligible for exemption under 5 U.S.C. 552a(k)(2) because they contain investigatory material compiled for law enforcement purposes, other than material within the scope of subsection (j)(2) of 5 U.S.C. 552a. Provided, however, that if any individual is denied any right, privilege or benefit that he would otherwise be eligible, as a result of the maintenance of such material, such material shall be provided to such individual, except to the extent that the disclosure of such material would reveal the identity of a source who furnished information to the Government under an express promise that the identify of the source would be held in confidence, or prior to January 1, 1975, under an implied promise that the identity of the source would be held in confidence. Accordingly, the following systems of records are exempt from (c)(3); (d); (e)(1); (e)(4) (G) and (H); (f); (g); and (h) of 5 U.S.C. 552a.

(1) PCC/GSCP–2, Canal Protection Division Incident Report Files;

(2) PCC/OIG–1, Investigative Files of the Office of Inspector General;

(3) PCC/OIG–2, Allegation/Complaint Files of the Office of Inspector General;

(4) PCC/OIG–3, Cash Audit Files.

(5) PCC/FMAC–1, Embezzlements, Burglaries, and Cash Shortages;

(6) PCC/EO–2, Equal Employment Opportunity Complaint File;

(7) PCC/GCCL–1, Marine Accident/Miscellaneous General Claims Files;

(8) PCC/GSCS–2, Housing Complaints Files;

(9) PCC/GSCX–1, Administrative Reports, Transfer of Custody and Official Complaint Files.

(10) PCC/AEPR–1, Probation and Parole Unit Child Custody Reports;

(11) PCC/AEPR–2, Presentence and Preparole Investigation Reports;

(12) PCC/AEPR–3, Probation and Parole Unit Statistical File;

(13) PCC/CAPS–2, Case Investigations;

(14) PCC/GSPL–1, Law Enforcement Case Report Files;

(15) PCC/GSPL–2, Police Headquarters Confidential File;

(16) PCC/GSPL–3, Detective Confidential Files;

(17) PCC/GSPL–4, Convict Files;

(18) PCC/GSPL–6, Police Photo Files;

(19) PCC/GSPL–7, Fingerprint File;

(20) PCC/GSPL–10, Master Name File;

(21) PCC/CZG–HL–2, Medical Administration System.

(b) Exemptions from the particular subsections are justified for the following reasons:

(1) From subsection (c)(3) because the release of the accounting of disclosures would permit the subject of a criminal investigation and/or civil case or matter under investigation, in litigation,

or under regulatory or administrative review or action to obtain valuable information concerning the nature of that investigation, case or matter and present a serious impediment to law enforcement or civil legal activities.

(2) From (d); (e)(4) (G) and (H); (f); (g); and (h) because these provisions concern an individual's access to records which concern him and such access to records in this system would compromise investigations, reveal investigatory techniques and confidential informants, and invade the privacy of private citizens who provide information in connection with a particular investigation.

(3) From subsection (e)(1) because it is often impossible to determine relevancy or necessity of information in the early stages of an investigation. The value of such information is a question of judgment and timing; what appears relevant and necessary when collected may ultimately be evaluated and viewed as irrelevant and unnecessary to an investigation. In addition, information may be obtained concerning the violation of laws other than those within the scope of its jurisdiction. In the interest of effective law enforcement, this information should be retained because it may aid in establishing patterns of unlawful activity and provide leads for other law enforcement agencies. Further, in obtaining evidence during an investigation, information may be provided which relates to matters incidental to the main purpose of the investigation but which may be pertinent to the investigative jurisdiction of another agency. Such information cannot readily be identified.

(c) The following systems of records are eligible for exemption under 5 U.S.C. 552a(k)(5) because they contain investigatory material compiled solely for the purpose of determining suitability, eligibility or qualifications for Federal civilian employment, military service, Federal contracts, or access to classified information, but only to the extent that the disclosure of such material would reveal the identity of a source who furnished information to the Government under an express promise that the identity of the source would be held in confidence, or, prior to January 1, 1975, under an implied promise that the identity of the source would be held in confidence. Accordingly, these systems of records are exempt from 5 U.S.C. 552a(c)(3) and (d).

(1) PCC/FMAC–1, Embezzlements, Burglaries, and Cash Shortages;

(2) PCC/PB–2, Appeals, Grievances, Complaints and Assistance Records;

(3) PCC/PB–3, Personnel Investigation Records;

(4) PCC/PR–5, Recruiting and Placement Records;

(5) PCC/PR–7, Personnel Reference Unit Files.

(6) PCC/OIG–1, Investigative Files of the Office of Inspector General;

(7) PCC/OIG–2, Allegation/Complaint Files of the Office of Inspector General;

(8) PCC/OIG–3, Cash Audit Files.

(d) Exemptions from the particular subsections are justified for the following reasons:

(1) From (c)(3) because release of an accounting of disclosure to an individual who is the subject of an investigation could compromise the investigation.

(2) From (d) because access to or amendment of records in these systems would reveal the identity(ies) of the source(s) of information collected in the course of a background investigation. Such knowledge might violate the explicit or implicit promise of confidentiality made to the source during the investigation or constitute an unwarranted invasion of the personal privacy of third parties, or reveal sensitive investigative techniques and procedures. Such breaches could restrict the free flow of information vital to a determination of a candidate's qualifications and suitability.

(e) The following systems of records are eligible for exemption under 5 U.S.C. 552a (k)(6) because they contain testing or examination material used solely to determine individual qualifications for appointment or promotion in the Federal service, the disclosure of which would compromise the objectivity or fairness of the testing or examination process. Accordingly, these systems of records are exempt from 5 U.S.C. 552a(d).

(1) PCC/CZG/BRAE–1, Canal Zone Board of Registration for Architects

and Professional Engineers Reference Files;

(2) PCC/MRBL–1, Marine License Files;

(3) PCC/MRNA–1, Admeasurer Examination File;

(f) Exemptions from the particular subsections are justified for the following reasons:

(1) The exemption from (d) is justified because portions of records in these systems relate to testing or examining materials and are used solely to determine individual qualifications for appointment or promotion in the Federal service. Access to or amendment of this information would compromise the objectivity and fairness of the testing or examining process.

[59 FR 9090, Feb. 25, 1994]

APPENDIX A TO PART 10—GENERAL ROUTINE USES

Information about an individual which is maintained in any system of records under the control of the Panama Canal Commission is subject to disclosure, as a routine use of such information, to any of the following persons or agencies under the circumstances described:

1. Information indicating a violation or potential violation of law (whether civil, criminal, or regulatory in nature, and whether involving a statute or regulation or a rule or order issued pursuant thereto) may be referred to the federal, state, local, foreign, or international agency charged with investigating or prosecuting such violations or charged with implementing or enforcing the particular statute, or regulations, rule, or order, which is pertinent thereto.

2. Information which has a bearing on matters which may be in dispute may be disclosed in the course of presenting evidence or argument to a court or administrative tribunal, a judicial official, or counsel for a party in connection with litigation or administrative proceedings in which the agency, or its officers or employees, are or may become involved.

3. Information may be provided to persons or agencies from whom information is solicited, to the extent necessary to elicit facts which may be relevant to a financial audit or an agency decision to hire or retain an employee, issue a security clearance, award a contract, grant a license, or otherwise provide a benefit or incur an obligation.

4. Information may be disclosed to a Federal agency, in response to its request in a particular case or in a category of cases, in connection with that agency's (a) decision in a personnel matter; (b) financial audits and accounting; (c) issuance of a security clearance; (d) investigation of an individual employed or formerly employed by the Panama Canal Commission (or its predecessors); or (e) decision to award a contract, grant a license, or otherwise provide a benefit or incur an obligation.

5. Information may be supplied in response to an inquiry from a Member of Congress on behalf of an individual or, at any stage of the legislative coordination and clearance process, to the Office of Management and Budget in connection with the review of private relief legislation.

6. Information which has a bearing on the qualifications of professional personnel (such as architects, attorneys, engineers, medical practitioners, pilots, and teachers) who have been employed by the agency or have had professional dealings with the agency may be provided to the appropriate authorities such as professional licensing and certifying boards and grievance committees.

7. To the extent necessary for implementation of the Panama Canal Treaty of 1977 and related agreements, information may, upon approval by the Agency Records Officer (Chief, Administrative Services Division) or that official's designee, be disclosed to officials of the Government of the Republic of Panama and to U.S. Government agencies which, under the Treaty, assumed functions formerly performed by the Panama Canal Company or the Canal Zone Government.

SUBCHAPTER B—GENERAL REGULATIONS

PART 60—CLASSIFIED INFORMATION

Sec.
60.1 Authority, scope and definitions.
60.2 Compliance with Executive Order 12356 and implementing directives.
60.3 Classification levels, categories, and limitations.
60.4 Limitations on original classification authority.
60.5 Use of derivative classification.
60.6 Requirements for classification guides.
60.7 Duration of classification.
60.8 Identification and markings.
60.9 Declassification and downgrading.
60.10 Access to classified information.
60.11 Top Secret, Secret, and Confidential Control Officer.
60.12 Mandatory review for declassification.
60.13 Custody and storage.
60.14 Security investigations; training and orientation of employees.
60.15 Debriefing upon termination of employment.
60.16 Responsibility of individual employees.
60.17 Loss or compromise; destruction of nonrecord classified information.
60.18 Procedures for receiving and transmitting classified documents.
60.19 Reproduction of classified documents.

AUTHORITY: E.O. 12356, 47 FR 14874; 32 CFR part 2001 (Directive No.1, Information Security Oversight Office), 47 FR 27836; E.O. 10450, 18 FR 2489; 22 U.S.C. 3611.

SOURCE: 53 FR 7894, Mar. 11, 1988, unless otherwise noted.

§ 60.1 Authority, scope, and definitions.

(a) Executive Order 12356, dated April 2, 1982 (47 FR 14874, April 6, 1982) and 32 CFR part 2001 (Directive No. 1 of the Information Security Oversight Office, approved by the National Security Council on June 22, 1982, 47 FR 27836, June 25, 1982), set forth uniform standards for the identification, classification, downgrading, declassification, and safeguarding of security information affecting the national defense and foreign relations of the United States. The regulations contained in this part are adopted pursuant to that Executive Order (which became effective on August 1, 1982) and implement its provisions within the Panama Canal Commission.

(b) Definitions:

(1) *Commission* refers to the Panama Canal Commission.

(2) *Information* means any information or material, regardless of its physical form or characteristics, that is owned by, produced by or for, or is under the control of the United States Government.

(3) *National security information* means information that has been determined pursuant to this Order or any predecessor order to require protection against unauthorized disclosure and that is so designated.

(4) *Foreign government information* means:

(i) Information provided by a foreign government or governments, an international organization of governments, or any element thereof with the expectation, expressed or implied, that the information, the source of the information, or both, be held in confidence; or

(ii) Information produced by the United States pursuant to or as a result of a joint arrangement with a foreign government or governments or an international organization of governments, or any element thereof, requiring that the information, the arrangement, or both, be held in confidence.

(5) *National security* means the national defense or foreign relations of the United States.

(6) *Confidential source* means any individual or organization that has provided, or that may reasonably be expected to provide, information to the United States on matters pertaining to the national security with the expectation, expressed or implied, that the information or relationship or both be held in confidence.

(7) *Original classification* means an initial determination that information requires, in the interest of national security, protection against unauthorized disclosure, together with a classification designation signifying the level of protection required.

(8) *Deputy Administrator* means the U.S. citizen incumbent of that position or the U.S. citizen temporarily designated to assume the responsibilities set forth under this part. In the event

that the regular incumbent is not serving in the position, a senior U.S. citizen official of the Commission listed in §60.4(a) will designate an eligible U.S. citizen to assume the duties and responsibilities of the position as set forth in this part.

(9) *Director, Office of Executive Administration*, ''Deputy Director, Office of Executive Administration,'' ''Deputy Personnel Director,'' and ''Chief, Administrative Services,'' are similarly defined to mean the U.S. citizen(s) temporarily designated to assume the responsibilities of the position as set forth in this part.

(10) *DUSD(P)* refers to the Deputy Under Secretary of Defense (Policy).

[53 FR 7894, Mar. 11, 1988, as amended at 56 FR 59882, Nov. 26, 1991]

§60.2 Compliance with Executive Order 12356 and implementing directives.

(a) The Director, Office of Executive Administration is designated the senior agency official to direct and administer the information security program for the Commission, including an active oversight and security education program to ensure effective implementation of Executive Order 12356 and any implementing directives published by the Information Security Oversight Office.

(b) The Director, Office of Executive Administration will establish procedures to prevent unnecessary access to classified information, including procedures that:

(1) Require that a demonstrable need for access to classified information is established before initiating administrative clearance procedures, and

(2) Ensure that the number of persons granted access to classified information is limited to the minimum consistent with operational and security requirements and needs.

(c) The Deputy Personnel Director will direct the conduct of investigations relative to the issuance of security clearances in accordance with the standards and criteria of Executive Order 10450.

[53 FR 7894, Mar. 11, 1988, as amended at 56 FR 59882, Nov. 26, 1991]

§60.3 Classification levels, categories, and limitations.

(a) Classification levels. Official information which requires protection against unauthorized disclosure in the interest of the national security shall be classified *Top Secret, Secret,* or *Confidential* depending upon the degree of its significance to national security. No other terms or phrases of classification shall be used to identify such information except as otherwise expressly provided by statute. If there is reasonable doubt about the need to classify information, it shall be safeguarded as if it were classified pending a determination by one of the original classification authorities listed in §60.4(a), who shall make this determination within thirty (30) days. If there is reasonable doubt about the appropriate level of classification, it shall be safeguarded at the higher level of classification pending a determination by one of the original classification authorities, who shall make this determination within thirty (30) days.

(1) *Top Secret* shall be applied to information, the unauthorized disclosure of which reasonably could be expected to cause exceptionally grave damage to the national security. The Commission does not have the authority to classify information originally as *Top Secret*.

(2) *Secret* shall be applied to information, the unauthorized disclosure of which reasonably could be expected to cause serious damage to the national security.

(3) *Confidential* shall be applied to information, the unauthorized disclosure of which reasonably could be expected to cause damage to the national security.

(b) Classification categories. Information shall be considered for classification if it concerns:

(1) Military plans, weapons, or operations;

(2) The vulnerabilities or capabilities of systems, installations, projects, or plans relating to the national security;

(3) Foreign government information;

(4) Intelligence activities (including special activities), or intelligence sources or methods;

(5) Foreign relations or foreign activities of the United States;

(6) Scientific, technological, or economic matters relating to the national security;

(7) United States Government programs for safeguarding nuclear materials or facilities;

(8) Cryptology;

(9) A confidential source; or

(10) Other categories of information that are related to the national security and that require protection against unauthorized disclosure as determined by the President or by agency heads or other officials who have been delegated original classification authority by the President. Any determination made under this subsection shall be reported promptly to the Director of Information Security, Office of the Deputy Under Secretary of Defense (Policy).

(c) Information that is determined to concern one or more of the categories in § 60.3(b) shall be classified when one of the original classification authorities listed in § 60.4(a) also determines that its unauthorized disclosure, either by itself or in the context of other information, reasonably could be expected to cause damage to the national security. Classification on the basis of combination or association with other (classified or unclassified) information shall be supported by a written explanation which shall be maintained with the record copy of such information.

(d) Unauthorized disclosure of foreign government information, the identity of a confidential foreign source, or intelligence sources or methods is presumed to cause damage to the national security.

(e) Information classified in accordance with § 60.3 shall not be declassified automatically as a result of any unofficial publication or inadvertent or unauthorized disclosure in the United States or abroad of identical or similar information, see § 60.11(e).

(f) Limitations on classification.

(1) In no case shall information be classified in order to conceal violations of law, inefficiency, or administrative error; to prevent embarrassment to a person, an organization, or the Panama Canal Commission or other agency; to restrain competition; or to prevent or delay the release of information that does not require protection in the interest of national security.

(2) Basic scientific research information not clearly related to the national security may not be classified.

(3) The President or the officials designated by the President in the FEDERAL REGISTER may reclassify information previously declassified and disclosed if it is determined in writing that:

(i) The information requires protection in the interest of national security; and

(ii) The information may reasonably be recovered. These reclassification actions shall be reported promptly to the Office of the Deputy Under Secretary of Defense (Policy) for subsequent reporting to the Director of the Information Security Oversight Office.

(4) Information in the custody of the Panama Canal Commission may be classified or reclassified after an agency has received a request for it under the Freedom of Information Act (5 U.S.C. 552) or the Privacy Act of 1974 (5 U.S.C. 552a), or the mandatory review provisions of Executive Order 12356 if such classification meets the requirements of that Executive Order and is accomplished personally and on a document-by-document basis by the officials identified in § 60.4(a) or an official with original Top Secret classification authority.

[53 FR 7894, Mar. 11, 1988, as amended at 56 FR 59882, Nov. 26, 1991]

§ 60.4 Limitations on original classification authority.

(a) The authority to classify information originally under this part shall be limited to the categories of Secret and Confidential. Only the following officials of the Panama Canal Commission are authorized to classify information or material originally:

(1) The Deputy Administrator;

(2) The Director, Office of Executive Administration; and

(3) The Secretary, Washington Office.

(b) Other officials and employees of the Panama Canal Commission originating documents which, in their opinion, should be classified as Secret or Confidential prior to dispatch, shall forward these documents to the Director, Office of Executive Administration

with recommendation for appropriate classification. Such documents shall be protected by a cover sheet (such as Panama Canal Commission Forms 165-Conf or 165–B Secret) of the classification recommended by the originator, and shall be handled and safeguarded as if classified, see §60.8(a).

(c) All information originated within the Commission which is believed to require classification as Top Secret (within the meaning of this part and Executive Order 12356) shall be hand carried by the originator to the Director, Office of Executive Administration who will determine the appropriate level of classification. If the information warrants Top Secret classification, that official shall transmit the information promptly under appropriate safeguards to the agency which has appropriate subject matter interest and classification authority in accordance with the procedures established by §60.18 of this part. If it is not clear which agency should get the information, it shall be sent to the Director of the Information Security Oversight Office for a determination.

(d) Intra-office documents, such as longhand notes or draft papers, that contain information affecting the national security shall be distinctly marked with the proper classification at top and bottom, by hand, by the originator, and shall be protected and destroyed in the same manner as an inter-office or inter-agency classified documents. Such intra-office documents shall be forwarded to the Office of Executive Administration for destruction as soon as the content has been included in a formal classified paper or as soon as the note or draft is no longer required.

(e) A holder of classified information or material shall observe and respect the classification assigned by the originator.

(f) Exceptional Cases. When an employee, contractor, licensee, or grantee of an agency that does not have original classification authority originates information believed by that person to require classification, the information shall be protected in a manner consistent with Executive Order 12356 and its implementing directives. The information shall be transmitted promptly as provided under the Order or its implementing directives to the agency that has appropriate subject matter interest and classification authority with respect to this information. That agency shall decide within thirty (30) days whether to classify this information. If it is not clear which agency has classification responsibility for this information, it shall be sent to the Director of the Information Security Oversight Office. The Director shall determine the agency having primary subject matter interest and forward the information, with appropriate recommendations, to that agency for a classification determination.

[53 FR 7894, Mar. 11, 1988, as amended at 56 FR 59882, Nov. 26, 1991]

§60.5 Use of derivative classification.

(a) Derivative classification is: (1) the determination that information is in substance the same as information currently classified; and (2) the application of the same classification markings. Persons who only reproduce, extract, or summarize classified information, or who only apply classification markings derived from source material or as directed by a classification guide, need not possess original classification authority.

(b) Persons who apply derivative classification markings shall:

(1) Observe and respect original classification decisions; and

(2) Carry forward to any newly created documents any assigned authorized markings. The declassification date or event that provides the longest period of classification shall be used for documents classified on the basis of multiple sources.

(c) If a person who applies derivative classification markings believes that the process of reproducing, extracting, paraphrasing, restating or summarizing may have changed the level of or removed the basis for classification, an appropriate official of the originating agency or the office of origin who has the authority to upgrade, downgrade or declassify the information must be consulted.

(d) Paper copies of derivatively classified documents shall be marked at the time of origination as follows:

(1) Classification authority. (i) The authority for classification shall be shown as follows:

CLASSIFIED BY (description of source document on classification guide).

(ii) If a document is classified on the basis of more than one source document or classification guide, the authority for classification shall be shown as follows:

CLASSIFIED BY MULTIPLE SOURCES

In these cases the derivative classifier shall maintain the identification of each source with the file or record copy of the derivatively classified document. A document derivatively classified on the basis of a source document that is marked ''CLASSIFIED BY MULTIPLE SOURCES'' shall cite the source document in its ''CLASSIFIED BY'' line rather than the term ''MULTIPLE SOURCES.''

(2) Declassification and downgrading instructions. Dates or events for automatic declassification or downgrading, or the notation ''ORIGINATING AGENCY'S DETERMINATION REQUIRED'' to indicate that the document is not to be declassified automatically, shall be carried forward from the source document, or as directed by a classification guide, and shown on a ''DECLASSIFY ON'' line as follows:

DECLASSIFY ON (date; description of event) or ORIGINATING AGENCY'S DETERMINATION REQUIRED (OADR)

(3) Any additional markings or abbreviations described in paragraphs (b) through (m) of § 60.8 of this part appearing on the source material shall be carried forward to the new material when appropriate.

§ 60.6 Requirements for classification guides.

(a) Classification guides used to direct derivative classification and issued pursuant to Section 2.2 of Executive Order 12356 and § 60.5 of this part shall, at a minimum:

(1) Identify or categorize the elements of information to be protected;

(2) State which of the classification designations (i.e., Top Secret, Secret, or Confidential) applies to each element or category of the information;

(3) Prescribe declassification instructions for each element or category of information in terms of:

(i) A period of time,

(ii) The occurrence of an event, or

(iii) A notation that the information shall not be declassified automatically without the approval of the originating agency; and

(4) Indicate how the designation, time limits, markings, and other requirements of Executive Order 12356 and this part are to be applied.

(b) Each classification guide shall be kept current and shall be reviewed at least once every two years and updated as necessary. The Office of Executive Administration shall compile and maintain a list of classification guides in current use.

(c) Each guide shall be approved personally and in writing by the Director, Office of Executive Administration.

(d) The Deputy Administrator may, for good cause, grant and revoke waivers of the requirement to prepare classification guides for specified classes of documents or information. A decision to waive the requirement should be based, at minimum, on an evaluation of the following factors:

(1) The ability to segregate and describe the elements of information;

(2) The practicality of producing or disseminating the guide because of the nature of the information;

(3) The anticipated usage of the guide as a basis for derivative classification; and

(4) The availability of alternative sources for derivatively classifying the information in a uniform manner. The Director of the Information Security Oversight Office shall be notified of any waivers.

[53 FR 7894, Mar. 11, 1988, as amended at 56 FR 59882, Nov. 26, 1991]

§ 60.7 Duration of classification.

(a) Information shall be classified as long as required by national security considerations. When it can be determined, a specific date or event for declassification shall be set by the original classification authority at the time the information is originally classified.

(b) Automatic declassification determinations under predecessor orders

shall remain valid unless the classification is extended by an authorized official of the originating agency. These extensions may be by individual documents or categories of information. The originating agency shall be responsible for notifying holders of the information of such extensions.

(c) Information classified under predecessor orders and marked for declassification review shall remain classified until reviewed for declassification under the provisions of Executive Order 12356.

§60.8 Identification and markings.

(a) At the time of original classification, the following information shall be shown on the face of all classified documents, or clearly associated with other forms of classified information in a manner appropriate to the medium involved, unless this information itself would reveal a confidential source or relationship not otherwise evident in the document or information:

(1) One of the three classification levels defined in §60.3;

(2) If the original classification authority is other than the approving or signing official, the identity shall be shown as follows:

CLASSIFIED BY (identification of original classification authority)

(3) Agency and office of origin. If the identity of the originating agency and office is not apparent on the face of a document, it shall be placed below the ''CLASSIFIED BY'' line.

(4) Declassification and downgrading instructions. Declassification and, as applicable, downgrading instructions shall be shown as follows:

(i) For information to be declassified automatically on a specific date:

DECLASSIFY ON: (date)

(ii) For information to be declassified automatically upon occurrence of a specific event:

DECLASSIFY ON: (description of event)

(iii) For information not to be declassified automatically:

DECLASSIFY ON: ORIGINATING AGENCY'S DETERMINATION REQUIRED or ''OADR''

(iv) For information to be downgraded automatically on a specific date or upon occurrence of a specific event:

DOWNGRADE TO (classification level) ON (date or description of event)

(b) Each classified document shall by marking or other means, indicate which portions are classified, with the applicable classification level, and which portions are not classified. The Deputy Administrator may, for good cause, grant and revoke waivers of this requirement for specified classes of documents or information. The Director of the Information Security Oversight Office shall be notified of any waivers.

(c) Marking designations implementing the provisions of Executive Order 12356, including abbreviations, shall conform to the standards prescribed in implementing directives issued by the Information Security Oversight Office.

(d) Foreign government information shall either retain its original classification or be assigned a United States classification that shall ensure a degree of protection at least equivalent to that required by the entity that furnished the information.

(e) Information assigned a level of classification under predecessor Executive Orders shall be considered as classified at that level of classification despite the omission of other required markings. Omitted markings may be inserted on a document by the officials listed in §60.4(a) of this part.

(f) The overall classification of a document, whether or not permanently bound, or any copy or reproduction thereof, shall be conspicuously marked or stamped at the top and bottom of the outside of the front cover (if any), on the title page (if any), on the first page, on the back page, and on the outside of the back cover (if any). Each interior page of a classified document shall be marked or stamped at the top and bottom either according to the highest classification of the content of the page, including the designation ''Unclassified'' when appropriate, or according to the highest classification of the document. In any case, the classification marking of the page shall not supersede the classification marking of

portions of the page marked with lower levels of classification.

(g) Whenever practicable, subjects and titles shall be selected so as not to require classification. When the subject or title is classified, an unclassified identifier may be assigned to facilitate receipt and reference.

(h) Classifiers shall identify the level of classification of each classified portion of a document (including subjects and titles), and those portions that are not classified. Portion marking shall be accomplished by placing a parenthetical designator immediately preceding or following the text that it governs. The symbols ''(TS)'' for Top Secret, ''(S)'' for Secret, ''(C)'' for Confidential, and ''(U)'' for Unclassified, shall be used for this purpose. If individual portion marking is impracticable, the document shall contain a description sufficient to identify the information that is classified and the level of such classification. The officials listed in § 60.4(a) may for good cause, request from the DUSD(P) a waiver of the portion marking requirement for specified classes of documents or information. The Director of the Information Security Oversight Office shall be notified by the DUSD(P) of any waivers.

(i) The classification and associated markings prescribed by this part for documents shall, where practicable, be affixed to material other than documents by stamping, tagging, or other means. If this is not practicable, recipients shall be made aware of the classification and associated markings by notification or other means.

(j) A transmittal document shall indicate on its face the highest classification of any information transmitted by it. It shall also include the following or similar instruction:

(1) For an unclassified transmittal document:

UNCLASSIFIED WHEN CLASSIFIED ENCLOSURE IS REMOVED

(2) For a classified transmittal document:

UPON REMOVAL OF ATTACHMENTS THIS DOCUMENT IS (classification level of the transmittal document standing alone)

(k) Documents that contain foreign government information shall include either the marking ''FOREIGN GOVERNMENT INFORMATION,'' or a marking that otherwise indicates that the information is foreign government information. If the fact that information is foreign government information must be concealed, the marking shall not be used and the document shall be marked as if it were wholly of U.S. origin. Documents classified by a foreign government or an international organization of governments shall, if the foreign classification is not in English, be marked with the equivalent United States classification. Foreign government information not classified by a foreign government or an international organization of governments but provided to the United States in confidence by a foreign government or by an international organization of governments, shall be classified at an appropriate level and shall be marked with the United States classification accordingly.

(l) In addition to the marking requirement in paragraphs (a) through (k) of this section, the additional markings provided in paragraphs (l)(1)–(3) of this section shall, as appropriate, be displayed prominently on classified information. When display of these additional markings is not practicable, their applicability to the information shall be included in the written notification of the assigned classification.

(1) For classified information containing Restricted Data or Formerly Restricted Data as defined in the Atomic Energy Act of 1954, as amended, such markings as may be prescribed by the Department of Energy in regulations issued under the Act shall be applied.

(2) For classified information involving intelligence sources or methods:

WARNING NOTICE—INTELLIGENCE SOURCES AND METHODS INVOLVED.

(3) For classified information that, pursuant to Executive Order 12356, the originator has determined should be subject to special dissemination or reproduction limitations, or both, a statement placing the user on notice of the restrictions shall be included in the text of the document or on its cover

sheet; e.g., ''Reproduction requires approval of originator,'' or ''Further dissemination only as directed by the Director, Office of Executive Administration.''

(m) National security information that is transmitted electronically shall be marked as follows:

(1) The highest level of classification shall appear before the first line of text;

(2) A ''CLASSIFIED BY'' line is not required;

(3) The duration of classification shall appear as follows:

(i) For information to be declassified automatically on a specific date:

DECL:(date)

(ii) For information to be declassified upon occurrence of a specific event:

DECL:(description of event)

(iii) For information not to be automatically declassified which requires the originating agency's determination, see §60.7(a):

DECL: OADR

(iv) For information to be automatically downgraded:

DNG (abbreviation of classification level to which the information is to be downgraded and date or description of event on which downgrading is to occur).

[53 FR 7894, Mar. 11, 1988, as amended at 56 FR 59882, Nov. 26, 1991]

§60.9 Declassification and downgrading.

(a) Information shall be declassified or downgraded as soon as national security considerations permit. Review of classified information shall be coordinated with other agencies that have a direct interest in the subject matter. Information that continues to meet the classification requirements prescribed by §60.3 of this part, despite the passage of time, will continue to be protected in accordance with Executive Order 12356 and this part.

(b) Information shall be declassified or downgraded by the official who authorized the original classification, if that official is still serving in the same position; by the originator's successor; by a supervisory official of either; or by officials delegated such authority, in writing, by an official listed in §60.4(a).

(c) In the case of classified information transferred in conjunction with a transfer of functions, and not merely for storage purposes, the receiving agency shall be deemed to be the originating agency for purposes of Executive Order 12356 and this part.

(d) In the case of classified information that is not officially transferred as described in §60.9(c), but that originated in an agency that has ceased to exist and for which there is no successor agency, each agency in possession of such information shall be deemed to be the originating agency for purposes of Executive Order 12356 and this part. Such information may be declassified or downgraded by the agency in possession after consultation with any other agency that has an interest in the subject matter of the information.

(e) The Commission shall maintain a current listing of officials delegated declassification or downgrading authority by name or position.

(f) Classified information accessioned into the National Archives of the United States from the Commission shall be declassified or downgraded by the Archivist of the United States in accordance with Executive Order 12356, the directives of the Information Security Oversight Office, and guidelines established by the Director, Office of Executive Administration of the Panama Canal Commission. Such guidelines shall be reviewed and updated, if necessary, at least every five years, unless earlier review is requested by the Archivist.

[53 FR 7894, Mar. 11, 1988, as amended at 56 FR 59882, Nov. 26, 1991]

§60.10 Access to classified information.

(a) A person is eligible for access to classified information provided that a determination of trustworthiness has been made and that such access is essential to the accomplishment of lawful and authorized Government purposes. The determinations of eligibility and trustworthiness, referred to in this part as a security clearance, shall be based on such investigations as the Panama Canal Commission may require. The Deputy Personnel Director

shall be responsible for conducting investigations relative to the issuance of security clearances in accordance with the standards and criteria of Executive Order 10450, and will maintain a list showing the level of security clearances granted to each person. Security clearances will be granted by the Director, Office of Executive Administration, as provided in § 60.14 of this part.

(b) In addition to a security clearance, a person must have a need for access to the particular classified information or material sought in connection with the performance of that person's official duties or contractual obligations, except in those instances provided for in paragraph (d) of this section. The determination of that need shall be made by the Director, Office of Executive Administration in coordination with officials having responsibility for the classified information or material.

(c) When a person no longer requires access to classified information or material in connection with the performance of that person's official duties or contractual obligations, the security clearance shall be withdrawn. Likewise, when a person no longer needs access to a particular security classification category, that person's security clearance shall be adjusted to the classification category still required for the performance of that person's duties and obligations. In both instances, such action shall be without prejudice to the person's eligibility for a security clearance should the need again arise.

(d) Persons engaged in historical research projects and former Presidential appointees who occupied policy-making positions may be authorized access to classified information or material originating within the Panama Canal Commission. In such cases, the requirement in section 60.10(a) that access to classified information may be granted only as is essential to the accomplishment of lawful and authorized Government purposes, may be waived, but only if the Commission has jurisdiction over the information and:

(1) The Commission makes a written determination that access is consistent with the interests of national security;

(2) The Commission takes appropriate steps to protect classified information from unauthorized disclosure or compromise, and ensures that the information is safeguarded in a manner consistent with Executive Order 12356;

(3) The Commission limits the access granted to former Presidential appointees to items that the person originated, reviewed, signed or received while serving as a Presidential appointee; and

(4) In addition, the Director, Office of Executive Administration obtains:

(i) Written agreements from the requesters to safeguard the information to which they are given access, as permitted by Executive Order 12356 and this part; and

(ii) Written consent from the requester for the Director, Office of Executive Administration to review all of their notes and manuscripts for the purpose of assuring that no classified information is contained in them.

(e) If the access requested by historical researchers and former Presidential appointees requires the rendering of services for which fair and equitable fees may be charged pursuant to 31 U.S.C. 9701, the requesters shall be so notified and the fees may be imposed.

(f) Except as provided by directives issued by the President through the National Security Council, classified information originating in one agency may not be disseminated outside any other agency to which it has been made available without the consent of the originating agency.

[53 FR 7894, Mar. 11, 1988, as amended at 56 FR 59883, Nov. 26, 1991]

§ 60.11 Top Secret, Secret, and Confidential Control Officer.

(a) The Director, Office of Executive Administration, Panama Canal Commission, is the Agency's designated Top Secret Control Officer and is responsible for the receipt, current accountability, and transmission of all Top Secret information. The Deputy Director, Office of Executive Administration is the Alternate Top Secret Control Officer. A physical inventory of all Top Secret material shall be made at least annually.

(b) The Director and the Deputy Director, Office of Executive Administration are also the Agency's designated Control Officer and Alternate Control

Officer, respectively, for all classified information up to and including Secret.

(c) The Director, Office of Executive Administration shall act on all suggestions and complaints received by the Commission with respect to the administration of Executive Order 12356 and this part, and may also recommend to the Deputy Administrator appropriate administrative actions or sanctions to correct abuse or violation of any provision of that Order or directives under it. The Director of the Information Security Oversight Office shall be promptly informed by the agency when such violations occur.

(d) To the extent required by applicable laws and agency regulations, the Deputy Administrator shall report to the Attorney General evidence reflected in classified information of possible violations of Federal criminal law by an agency employee and of possible violations by any other person of those Federal criminal laws specified in guidelines adopted by the Attorney General.

(e) When the Commission is the agency of primary interest, following an inadvertent or unauthorized publication or disclosure of information identical or similar to information that has been classified in accordance with the Executive Order 12356 or predecessor orders, the Director, Office of Executive Administration shall determine the degree of damage to the national security, the need for continued classification, and, in coordination with the agency in which the disclosure occurred, what action must be taken to prevent similar occurrences, see §60.17.

[53 FR 7894, Mar. 11, 1988, as amended at 56 FR 59883, Nov. 26, 1991]

§60.12 Mandatory review for declassification.

(a) Any United States citizen, permanent resident alien, federal agency, or the government of a U.S. state or municipality may request that classified information be reviewed for declassification by the originating agency and released. Such requests must be submitted in writing to the Chief, Administrative Services Division, Panama Canal Commission, Unit 2300, APO AA 34011–2300 (or Panama Canal Commission, Balboa Heights, Republic of Panama). In accordance with section 9701 of title 31, United States Code, fees may be applied to any requests for declassification and release. A request need not identify the information requested by date or title, but must describe the document or material containing the information with sufficient specificity to enable the agency to locate it with a reasonable amount of effort. Whenever a request is deficient in its description of the information sought, the Chief, Administrative Services Division shall notify the requester that, unless additional identifying information is provided or the scope of the request is narrowed, the Commission will take no further action on the request.

(b) When the Commission receives any request for documents in its custody that were classified by another agency, it shall refer copies of the request and the requested documents to the originating agency for processing, and may, after consultation with the originating agency, inform the requester of the referral. In cases in which the originating agency determines in writing that a response is required, it is the responsibility of the referring agency to respond to the requester.

(c) When another agency refers a request to the Commission for review because the Commission originally classified the information requested, the Commission shall treat the request as though it were submitted directly to it under paragraph (a) of this section. The Commission shall send its decision directly to the requester and shall, if so requested, notify the referring agency of its decision on the request and on the appeal, if any.

(d) Requests for classification review made under paragraph (a) of this section shall be promptly acknowledged by the Chief, Administrative Services Division and then forwarded to the official who originally classified the document, or that official's successor, or when appropriate to an official designated by an official listed in §60.4(a), who, in coordination with the Chief, Administrative Services Division, shall

decide whether the requested information may be declassified, see § 60.7 and § 60.9.

(1) Unless withholding is otherwise warranted under applicable law, any information which may be declassified shall normally be forwarded to the requester within sixty (60) days after receipt of a proper request. If additional time is needed to locate or review the requested information, the Chief, Administrative Services Division will notify the requester accordingly. Except in unusual circumstances, a decision will be made within one year of receipt of the request.

(2) When information cannot be declassified in its entirety, a reasonable effort will be made, consistent with other applicable law, to release those portions of the requested information that constitute a coherent segment.

(3) Upon the denial or a partial denial of a request, the Chief, Administrative Services Division shall reply to the requester and provide a brief statement of the reasons for the denial, a notice of the right to appeal the decision to the Director, Office of Executive Administration and a notice that the appeal must be in writing and must be received by the Commission within sixty (60) days of receipt of the decision letter by the requester. Appeals should be addressed to: Director, Office of Executive Administration, Panama Canal Commission, Unit 2300, APO AA 34011–2300 (or Panama Canal Commission, Balboa Heights, Republic of Panama).

(e) Within thirty (30) days after its receipt of a proper appeal against an initial decision not to declassify information, the Director, Office of Executive Administration shall make and dispatch the decision whether the information should be declassified. If the Director, Office of Executive Administration is the original classification authority of the information under appeal, the Deputy Administrator shall determine whether the information may be declassified. The Director, Office of Executive Administration shall, after the decision, promptly make available to the requester any information that is declassified and which is otherwise releasable. If continued classification of the requested information is necessary, the requester shall be notified of that decision and the reasons therefor. If requested, the appeal determination shall also be communicated to any referring agency.

(f) The classification reviews made in response to requests and appeals under this section are in addition to the systematic review of classified information prescribed by Executive Order 12356 and 32 CFR part 2001.

(g) Requests for access to classified material submitted under the Freedom of Information Act or the Privacy Act of 1974 (5 U.S.C. 552 and 552a) shall be processed in accordance with parts 9 and 10 of 35 CFR, and shall be subject to the same review criteria for declassification as requests submitted under paragraphs (a) through (d) of this section. In response to a request for information under the Freedom of Information Act, the Privacy Act of 1974, or the mandatory review provisions of this Order, the Commission shall refuse to confirm or deny the existence or non-existence of requested information whenever the fact of its existence or non-existence is itself classifiable under Executive Order 12356 or 32 CFR part 2001.

[53 FR 7894, Mar. 11, 1988, as amended at 56 FR 59883, Nov. 26, 1991; 59 FR 26123, May 19, 1994]

§ 60.13 Custody and storage.

(a) Classified information shall be protected in accordance with applicable National Security Council directives or directives promulgated by the Information Security Oversight Office and approved by the National Security Council.

(b) Each bureau director and chief of an independent unit (or classified security control officer as designated by the Director, Office of Executive Administration) shall be responsible for assuring that all classified information within that official's organization is used, processed, stored, and transmitted only under conditions which will provide adequate protection and prevent access by, or dissemination to, unauthorized persons. Containers, vaults, alarm systems, and associated security devices procured after the effective date of this part for the storage and protection of classified information

shall be in conformance with the standards and specifications published by the General Services Administration and, to the maximum extent practicable, be of the type designated on its Federal Supply Schedule.

(c)(1) Top secret information shall be stored in a GSA-approved security container with an approved built-in, three-position, dial-type combination lock; in a vault protected by an alarm system and response force; or in other storage facility that meets the standards for top secret established under the provisions of paragraph (b) of this section.

(2) Secret and confidential information shall be stored in a manner and under the conditions prescribed for top secret information, or in a container, vault, or alarmed area that meets the standards for secret or confidential information established pursuant to the provisions of paragraph (c)(1) of this section, and/or paragraph (c)(3) of this section.

(3) Secret and confidential information may also be stored in a safe-type filing cabinet having a built-in, three-position, dial-type, changeable combination lock, or a steel filing cabinet equipped with a steel lock bar, provided it is secured by a three-position, changeable combination padlock approved by GSA for the purpose. The Director, Office of Executive Administration shall prescribe any necessary supplementary controls for storage of secret information in cabinets equipped with a steel lock bar.

(d) Each bureau director and chief of an independent unit (or classified security control officer) is responsible for assuring that all personnel within that official's organization, having access to classified information, have a security clearance issued by the Director, Office of Executive Administration, see § 60.14 and § 60.16.

(e)(1) Combinations of all repositories containing classified information shall be changed at least annually and forwarded in double-sealed envelopes to the Office of Executive Administration. The double-sealed envelopes shall be classified no lower than the highest category of information contained in the repositories. Combinations to dial-type locks shall be changed only by persons having appropriate security clearance, and shall be changed whenever such equipment is placed in use, whenever a person knowing the combination no longer requires access to the combination, whenever the equipment is taken out of service, and at least once every year. Knowledge of combinations protecting classified information shall be limited to the minimum number of persons necessary for operating purposes. Records of combinations shall be classified no lower than the highest level of classified information to be stored in the security equipment concerned. Bureau directors and heads of independent units (or classified security control officers) shall ensure that combinations of dial-type locks shall be changed whenever there is reason to suspect possible compromise of the current combination.

(2) When security equipment having a built-in combination lock is taken out of service, the lock shall be reset to the standard combination 50–25–50. Combination padlocks shall be reset to the standard combination 10–20–30.

(3) The Commission shall establish administrative procedures for the control and accountability of keys and locks whenever key-operated, high-security padlocks are utilized. The level of protection provided such keys shall be equivalent to that afforded the classified information being protected. Under no circumstances may keys be removed from the premises. They shall be stored in a secure container.

(f) Custodians of classified matter are responsible for registering with the Office of Executive Administration the names of all persons having knowledge of combinations to repositories containing classified information.

(1) Persons entrusted with classified information shall be responsible for providing protection and accountability for such information at all times and for locking classified information in approved security equipment whenever it is not in use or under the direct supervision of authorized persons. Custodians shall follow procedures which will ensure that unauthorized persons do not gain access to classified information.

(2) Individuals charged with the custody of classified information shall

conduct the necessary inspections within their areas to ensure adherence to procedural safeguards prescribed to protect classified information. The Director, Office of Executive Administration shall ensure that periodic inspections are made to determine whether procedural safeguards prescribed by agency regulations are in effect at all times.

[53 FR 7894, Mar. 11, 1988, as amended at 56 FR 59883, Nov. 26, 1991]

§ 60.14 Security investigations; training and orientation of employees.

(a) Requests for security clearances, including changes in the level of clearances, will be forwarded to the Office of Personnel Administration for background investigations and security checks. The Deputy Personnel Director shall ensure that all necessary investigations are completed, and will provide a recommendation on the issuance of a security clearance to the Office of Executive Administration. The Director, Office of Executive Administration, in consideration of all available information, will determine if a security clearance may be issued, or if the level may be changed, and establish the expiration date of the clearance.

(b) The Director, Office of Executive Administration is also responsible for establishing and maintaining a training and orientation program for employees concerned with classified information or material.

[53 FR 7894, Mar. 11, 1988, as amended at 56 FR 59884, Nov. 26, 1991]

§ 60.15 Debriefing upon termination of employment.

(a) Bureau directors and heads of independent units (or classified security control officers as designated by the Director, Office of Executive Administration) shall be responsible for notifying the Office of Executive Administration whenever it is necessary that an employee be briefed or debriefed. Such notification should be in writing and be at least sixty (60) days, or as long as possible, in advance.

(b) Bureau directors and heads of independent units (or classified security control officers) shall ensure that debriefings are accomplished for any employee whose employment is terminated, or scheduled to be terminated, or when a temporary separation from employment (not to include leave) for sixty (60) days or more has occurred or is scheduled, whenever the employee has had access to classified information within the last twelve calendar months of his employment.

[56 FR 59884, Nov. 26, 1991]

§ 60.16 Responsibility of individual employees.

(a) The responsibility for the safeguarding of classified information shall rest on each individual employee having possession or knowledge of it, regardless of how such information or knowledge was obtained. In addition, each individual employee is directly responsible for acquiring familiarity with and complying with these and subsequently published security regulations.

(b) Any officer or employee, at any level of employment, determined to have been responsible for any release or disclosure of national security information or material in a manner not authorized by Executive Order 12356 or under this part, is subject to prompt and stringent administrative action, and, where a violation of criminal statute may be involved, is subject to prosecution under applicable law.

§ 60.17 Loss or compromise; destruction of nonrecord classified information.

(a) Any person who has knowledge of the loss or possible compromise of classified information in the custody of the Commission shall immediately report the circumstances to the Office of Executive Administration. The Director, Office of Executive Administration shall initiate an inquiry to:

(1) determine cause,

(2) place responsibility, and

(3) take corrective measures and appropriate administrative, disciplinary, or legal action. If it is determined that classified information has been compromised, the agency that originated the information shall be notified of the loss or possible compromise so that a damage assessment may be conducted and appropriate measures taken to negate or minimize any adverse effect of the compromise.

(b) The Deputy Administrator or the Director, Office of Executive Administration shall initiate a damage assessment whenever there has been a compromise of classified information originated by the Commission that, in his judgment, can reasonably be expected to cause damage to the national security. Damage assessments shall be in writing and shall conform to the guidelines established by the Information Security Oversight Office, as provided in 32 CFR 2001.47(b).

(c) Nonrecord classified information that has served its intended purpose shall be destroyed in accordance with procedures and methods approved by the Deputy Administrator or the Director, Office of Executive Administration. The method of destruction selected must preclude recognition or reconstruction of the classified information or material.

(d) The Office of Executive Administration is the only office within the Commission authorized to destroy classified documents which have been recorded as received and assigned a control number.

[53 FR 7894, Mar. 11, 1988, as amended at 56 FR 59884, Nov. 26, 1991]

§60.18 Procedures for receiving and transmitting classified documents.

(a) The procedures for handling classified documents received by any person or unit of the Panama Canal Commission shall be as follows:

(1) All classified documents received by any person or unit of the Commission shall be immediately delivered to the Office of Executive Administration. Personnel of the Office of Executive Administration shall receipt for and record all classified documents received from outside agencies (except that those officials listed in §60.4(a) of this part may receipt for classified documents from outside agencies, and then forward them to the Office of Executive Administration, in person or by an authorized representative).

(2) The receipted documents shall be permanently recorded by the Office of Executive Administration, at which time accountability for these documents shall be assumed by that office.

(3) When classified documents addressed to an individual in the Panama Canal Commission are received by the Office of Executive Administration, the addressee shall be notified by telephone that such classified matter is awaiting him; or the classified documents may be transmitted as provided in paragraph (c) and (d) of this section. When the addressee picks up the classified documents, all items shall be recorded on an individual classified documents register furnished by the Office of Executive Administration; one copy is to be permanently retained in the library, and one is to be furnished to the addressee, or his authorized representative, who shall sign for the documents opposite each item on the register. This method of transfer may be utilized in lieu of a receipt.

(b) When any unit of the Panama Canal Commission prepares a document which is to be classified Secret or Confidential for transmission to other offices of the Commission, the procedure shall be as follows:

(1) Prepare sufficient copies of the document for whatever distribution is required, and one additional copy for file in the Office of Executive Administration.

(2) Forward draft copies, handwritten copies, and carbons to the Office of Executive Administration for retention or destruction under established procedures.

(i) In addition, all portions of electric typewriter ribbons used in the preparation of classified material must be destroyed in the same manner. Reusable cloth typewriter ribbons must be protected if used for preparation of classified material on the first pass through typewriter.

(ii) Classified material may not be entered into electronic equipment with memory capability, such as word processors, computers, personal computers, memory typewriters and other similar equipment, *unless* specific, written permission is obtained in advance, for each specific piece of equipment or system, from the Office of Executive Administration.

(3) Bring all copies of the document to the Office of Executive Administration. Copies shall be securely fastened underneath a cover sheet of the classification recommended by the originator.

(4) At the direction of the Director, Office of Executive Administration, the proper classification, short title, and serial number shall be assigned to each document, and an accountability stamp shall be placed on each copy.

(5) All classified documents shall be appropriately and conspicuously marked to put all persons on clear notice of their classified content. In addition, all classified documents shall be marked to indicate the downgrading-declassification schedule to be followed in accordance with § 60.9.

(6) The documents shall be recorded in the permanent documents log. The accountability for the documents passes from the originator to the Office of Executive Administration at this point.

(7) Distribution of the remaining copies shall be made according to the procedures covered in paragraphs (a)(3), (c) and (d) of this section. The number of copies of documents containing classified information shall be kept to a minimum to decrease the risk of compromise and reduce storage costs.

(c) When any unit of the Panama Canal Commission transmits documents or information classified Top Secret to other offices of the Commission, or any classified documents or information to any agencies or units other than the Commission, the procedure for handling such information shall be as follows:

(1) The documents or information shall be enclosed in opaque inner and outer covers before transmitting. The inner cover shall be a sealed wrapper or envelope plainly marked with the assigned classification and addresses of both sender and addressee. The outer cover shall be sealed and addressed with no identification of the classification of its contents.

(2) A receipt shall be attached to or enclosed in the inner cover. The receipt shall identify the sender, addressee, and the document, but shall contain no classified information. It shall be immediately signed by the recipient and returned to the sender.

(d) When the Commission transmits classified documents or information to any agency other than the Commission, or documents or information classified Top Secret to other offices of the Commission, one or more of the following methods shall be used:

(1) By specifically designated personnel having the appropriate security clearance;

(2) By State Department diplomatic pouch;

(3) By messenger-courier system specifically created for that purpose;

(4) Over authorized secure communication circuits.

(e) Secret and confidential documents or information may also be transmitted by the following methods:

(1) As provided in paragraph (c) of this section, if transmittal is to be within the Commission;

(2) By U.S. registered mail through Army, Navy, or Air Force Postal Service facilities provided that the information does not at any time pass out of U.S. citizen control and does not pass through a foreign postal system; or

(3) Under escort of appropriately cleared personnel aboard U.S. Government and U.S. Government-contract vehicles or aircraft, ships of the United States Navy, civil-service-manned U.S. Naval ships, and ships of U.S. Registry. Operators of vehicles, captains or masters of vessels, and pilots of aircraft who are U.S. citizens and who are appropriately cleared may be designated as escorts.

§ 60.19 Reproduction of classified documents.

(a) Top Secret documents may not be reproduced without the consent of the originating agency unless otherwise marked by the originating office. The reproduction of Secret and Confidential documents may be restricted by the originating agency. Reproduced copies of classified documents are subject to the same accountability and controls as the original documents.

(b) The Office of Executive Administration is the only office within the Panama Canal Commission authorized to reproduce documents which have been classified. Other offices within the Panama Canal Commission which require the reproduction of classified documents shall take them to the Office of Executive Administration,

where the documents will be reproduced, properly marked, controlled and then returned to the user.

PART 61—HEALTH, SANITATION, AND COMMUNICABLE DISEASE SURVEILLANCE

Subparts A–D [Reserved]

Subpart E—Maritime Communicable Disease Surveillance

DEFINITIONS AND GENERAL PROVISIONS

Sec.
61.121 Purpose.
61.122 Definitions.
61.123 Periods of isolation and surveillance.
61.124 Periods of immunity.
61.125 Sanitary measures previously applied.
61.126 Certificate of measures applied.

MEASURES IN TRANSIT

61.151 Vessels; general provisions.
61.152 Vessels; sanitary inspection and corrective measures.
61.153 Vessels; entries in the official record.
61.154 Vessels; radio report of disease aboard.
61.155 Vessels; yellow fever.
61.156 Vessels; disinsecting.

VESSELS SUBJECT TO COMMUNICABLE DISEASE SURVEILLANCE INSPECTION

61.171 General provisions.
61.172 Exempt vessels subject to sanitary regulations.
61.173 Report of disease or rodent mortality on vessel during stay in port.

GENERAL REQUIREMENTS UPON ARRIVAL AT THE PANAMA CANAL

61.191 Applicability.
61.192 Vessels; awaiting inspection.
61.193 Maritime communicable disease surveillance declaration.
61.194 Persons; restrictions on boarding and leaving vessels, or having contact with persons aboard.
61.195 Communicable disease surveillance inspsection and controls.
61.196 Persons; examination.
61.197 Vessels; persons and things; communicable diseases other than quarantinable diseases.
61.198 Persons; isolation.
61.199 Furnishing of fresh crew.
61.200 Disinfection of cargo.
61.201 Exemption for mails.

PARTICULAR REQUIREMENTS UPON ARRIVAL AT THE PANAMA CANAL

61.221 Applicability.
61.222 Cholera; vessels and things.
61.223 Cholera; vessels; persons.
61.224 Plague; vessels.
61.225 Plague; vessels; persons; things.
61.226 Yellow fever; vessels; classification.
61.227 Yellow fever; vessels; persons.

SANITARY INSPECTION: RODENT AND VERMIN CONTROL

61.241 General provisions.
61.242 Disinsecting and disinfection; vessels and persons.
61.243 Deratting Certificates; Deratting Exemption Certificates.
61.244 Vessels in traffic between the United States and Panama.

PRATIQUE: VESSELS

61.261 General requirements.
61.262 Free pratique.
61.263 Provisional pratique.
61.264 Radio pratique.

IMPORTATION OF DOGS AND CATS

61.281 Quarantine of dogs and cats.

Subpart F—Pest Exterminators

61.311 License required to engage in business of pest extermination.
61.312 Licensed foreman required to be in charge.
61.313 Possession and display of licenses.
61.314 Renewal of licenses; suspension and revocation.
61.315 Approval of types, concentrations, and manner of use of insecticides and rodenticides required.
61.316 Sale of insecticides and rodenticides.
61.317 Inapplicability to Government agencies and their officers and employees.
61.318 Inapplicability to military reservations.

Subparts G–H—[Reserved]

Subpart I—Authority of Governor

61.381 Authority of Governor.

AUTHORITY: Issued under authority vested in the President by section 1701, Pub. L. 96–70, 93 Stat. 492; EO 12173, 44 FR 69271.

SOURCE: 31 FR 12236, Sept. 16, 1966, unless otherwise noted.

Subparts A–D [Reserved]

Subpart E—Maritime Communicable Disease Surveillance

AUTHORITY: Issued under authority vested in the President by 22 U.S.C. 3811; EO 12215, 45 FR 36043.

SOURCE: 51 FR 21361, June 12, 1986, unless otherwise noted.

EDITORIAL NOTE: Nomenclature changes appear at 62 FR 33748, June 23, 1997.

DEFINITIONS AND GENERAL PROVISIONS

§ 61.121 Purpose.

The purpose of the regulations in this subpart is to insure the health and safety of employees of the Panama Canal Commission, to prescribe procedures for coordination with the Government of Panama concerning communicable disease surveillance, and to comply with the recommendations of the World Health Organization (WHO) concerning such surveillance.

[51 FR 21361, June 12, 1986, as amended at 62 FR 33748, June 23, 1997]

§ 61.122 Definitions.

As used in this subpart:

Aedes aegypti Index means the ratio, expressed as a percentage, between the number of houses in a limited well-defined area on the premises of which actual breeding-places of Aedes aegypti are found, and the total number of houses examined in that area.

Boarding official (admeasurer) means an official or employee of the Panama Canal Commission specially trained and assigned to communicable disease surveillance duty by authority of the Chief, Occupational Health Division.

Certificate of vaccination means a certificate of vaccination or revaccination against cholera, or yellow fever conforming with the rules and models prescribed by the International Health Regulations.

Chief, Occupational Health Division means the officer of the Panama Canal Commission responsible for the application of these regulations.

Communicable disease means an illness due to an infectious agent or its toxic products which is transmitted directly or indirectly to a well person from an affected person, animal, or arthropod (including insecta and arachnida) or through the agency of an intermediate host, vector or the inanimate environment.

Communicable disease surveillance means the surveillance or quarantine of a person, vessel, or other conveyance, animal or thing, in such place and for such period of time as may be specified in the regulations in this subpart.

Contamination means the presence of undesirable substance or material which may contain pathogenic microorganisms.

Day means a period of 24 hours.

Deratting certificate means a certificate issued with respect to a vessel by the competent health authority of a port, in the form prescribed by the International Health Regulations, recording the inspection and deratting of the vessel.

Deratting exemption certificate means a certificate issued with respect to a vessel by the competent health authority of a port, in the form prescribed by the International Health Regulations, recording the inspection and exemption from deratting of the vessel which has a negligible number of rodents on board.

Disinfection means the act of rendering anything free from the causal agents of disease.

Disinfestation means the act of destroying the vectors of a communicable disease.

Disinsecting means the act of destroying insects or other anthropod vectors of communicable disease.

Foreign port means any seaport other than a port of the United States or of the Republic of Panama.

Fumigation means the process by which the destruction of vermin and rodents is accomplished by the employment of gaseous agents.

Immunity means the condition of being protected against a particular disease, either as a result of artificial immunization or through a previous attack of the disease in question.

Incubation period means the period between the implanting of disease organisms in a susceptible person and the appearance of clinical manifestations of the disease.

Infected area means an area (as defined in the International Health Regulations): (1) Where there is a nonimported case of cholera, or (2) where there is a nonimported case of plague, or there is plague infection among rodents; or (3) where there is a nonimported case of yellow fever, or there

is activity of yellow fever virus in vertebrates other than man.

Infected person means any person who is suffering from a quarantinable disease or who is considered by the Chief, Occupational Health Division to be infected with such a disease.

Infected vessel means a vessel determined to be infected with an internationally quarantinable disease, as recognized by the World Health Organization (WHO).

International Health Regulations means the regulations adopted by the 22nd World Health Assembly in 1969, as amended by subsequent Assemblies for the International Surveillance of Communicable Diseases, (3rd Edition, Annotated, 1983).

Isolation means (1) when applied to a person or group of persons, the separation of that person or group of persons from other persons in such a manner as to prevent the spread of infection; and (2) when applied to animals, the separation of an animal or group of animals from other animals or vectors of disease in such a manner as to prevent the spread of infection.

Port of Panama means any seaport in the Republic of Panama.

Port of the United States means any seaport in the United States, in the Commonwealth of Puerto Rico, and in territories or possessions of the United States.

Pratique means authorization granted by the Chief, Occupational Health Division in writing or via radio releasing or provisionally releasing a vessel from quarantine, without relieving the vessel from completing the necessary documentation.

Quarantinable disease means a specific communicable disease such as cholera, plague, or yellow fever for which WHO requires specific quarantine measures.

Rodents means gnawing mammals capable of transmitting or harboring quarantinable diseases.

Suspect means a person who is considered by the Chief, Occupational Health Division as having been exposed to infection by a quarantinable or other dangerous infectious disease and to be capable of spreading that disease.

Suspected vessel, means a vessel that is suspected to be infected with an internationally quarantinable disease as recognized by WHO.

Valid means (1) with respect to a Deratting Certificate or Deratting Exemption Certificate issued for a vessel, a certificate issued by the competent health authority for a port not more than 6 months before presentation of the certificate to the Chief, Occupational Health Division, or if the vessel is proceeding to a port designated or approved for the issuance of such certificates, not more than 7 months before such presentation; and (2) with respect to a Certificate of Vaccination, a certificate presented within the applicable period of immunity prescribed in §61.124.

Vector means an animal (including insects), plant, or thing which conveys or is capable of conveying pathogenic organisms from a person or animal to another person or animal.

WHO means the World Health Organization, an international organization which acts as the directing and coordinating authority on international health work and is charged with eradicating or controlling epidemic, endemic and other diseases.

Yellow fever receptive area means an area in which the virus of yellow fever does not exist but where the presence of Aedes aegypti or any other domiciliary or peri-domiciliary vector of yellow fever would permit its development if introduced.

[51 FR 21361, June 12, 1986, as amended at 62 FR 33748, June 23, 1997]

§61.123 Periods of isolation and surveillance.

Except as otherwise provided with respect to infected persons, isolation or surveillance shall not exceed the following appropriate incubation period for internationally quarantinable diseases:

(a) Plague: 6 days.

(b) Cholera; 5 days.

(c) Yellow fever: 6 days.

§61.124 Periods of immunity.

The following shall be the recognized period of immunity after successful immunication:

(a) Cholera: 6 months, beginning 6 days after the first injection of the vaccine or on the date of a revaccination during such six-month period.

(b) Yellow fever: 10 years beginning 10 days after date of original vaccination or from date of a revaccination within such period of 10 years.

§ 61.125 Sanitary measures previously applied.

(a) Required sanitary measures (other than a medical examination) taken by a vessel with respect to a quarantinable disease need not be repeated upon the vessel's arrival in Panama Canal waters, unless—

(1) After the departure of a vessel from the port where the measures were applied there is or has been on board an infected person or suspect or there has occurred any other incident of epidemiological significance either in the port or on board the vessel which, in the judgment of the Chief, Occupational Health Division, requires further application of any such measure; or

(2) The Chief, Occupational Health Division has ascertained, on the basis of definite evidence, that the individual measure so applied was not substantially effective.

(b) Measures taken with regard to unsanitary conditions on vessels entering a port of Panama by means of Panama Canal waters will be coordinated with the Port Quarantine Office of the Government of Panama.

§ 61.126 Certificate of measures applied.

The Chief, Occupational Health Division shall, upon request, issue free of charge to a carrier a certificate specifying the sanitary measures applied to a vessel, the parts thereof treated, the methods employed, and the reasons why the measures were applied.

MEASURES IN TRANSIT

§ 61.151 Vessels; general provisions.

The measures described in §§61.152 through 61.156 must be taken in transit with respect to vessels destined to enter Panama Canal waters.

§ 61.152 Vessels; sanitary inspection and corrective measures.

The master or his/her designated officer shall make a daily sanitary inspection of all compartments or the vessel normally accessible to passenger or crew. Immediate corrective measures shall be taken if evidence of vermin, rodents or unsanitary conditions is found.

[51 FR 21361, June 12, 1986, as amended at 62 FR 33748, June 23, 1997]

§ 61.153 Vessels; entries in the official record.

A record of the conditions found in a sanitary inspection under §61.152 and the corrective measures taken shall be entered in an official record.

§ 61.154 Vessels; radio report of disease aboard.

(a) The master of a vessel destined to enter Panama Canal waters shall report promptly by radio to the Chief, Occupational Health Division of the Panama Canal Commission prior to entering the Panama Canal, and wherever practicable not less than four hours before the expected arrival of the ship, the occurrence or suspected occurrence of any serious human or animal disease manifested by fever, diarrhea, skin rashes and other suspicious symptoms such as may indicate any of the following: Anthrax, cholera or suspected cholera, dengue, diphtheria, encephalitis, gonorrhea, hemolytic streptococcal infections, infectious hepatitis, leprosy, malaria, measles, meningococcal meningitis, plague, poliomyelitis, shigella dysentery, syphilis, tuberculosis, typhoid fever, typhus, suspected viral hemorragic fever, yellow fever, or any other diseases which may be added to the list of internationally communicable diseases as recognized by WHO in its International Health Regulations or by the Ministry of Health of the Government of Panama. A disease may also be deleted from this list with the concurrence of the Ministry of Health of the Government of Panama, if it has been removed from the WHO regulations.

(b) The Chief, Occupational Health Division will notify the Port Quarantine Office of the Government of

Panama as soon as information is received that one of the preceding diseases is present or suspected of being present on a ship entering the Panama Canal.

[51 FR 21361, June 12, 1986, as amended at 62 FR 33748, June 23, 1997]

§61.155 Vessels; yellow fever.

(a) The following vessels shall be disinsected prior to their arrival in Panama Canal waters, and the master of the vessel shall certify to this effect on the maritime quarantine declaration presented to the Chief, Occupational Health Division upon arrival:

(1) An infected or suspected vessel as defined in §61.226; or

(2) A vessel from an infected area; or,

(3) A vessel that has within 15 days left a port where the Aedes aegypti Index is reported as 1.0 or higher.

(b) The insecticide used and method or disinsecting shall be those prescribed by the Chief, Occupational Health Division.

(c) If the disinsecting required under paragraph (a) of this section is not carried out or if the Chief, Occupational Health Division finds live mosquitoes on board or otherwise determines that the vessel's own disinsecting was inadequate, the vessel shall be detained in quarantine at a mooring not less than 400 meters from shore until disinsected by communicable disease surveillance personnel, and persons other than such personnel shall not be allowed on board until disinsecting is completed.

(d) The Quarantine Office of the Government of Panama, upon request, will be provided complete information from the ship's required entry documents for specified vessel(s) which have either transited the Panama Canal or docked at a port of Panama.

(e) The disinfecting required under paragraph (a) of this section shall not be required when the index of Aedes aegypti in Panama exceeds the 1.0 index level established by the World Health Organization (WHO).

[51 FR 21361, June 12, 1986, as amended at 62 FR 12751, Mar. 18, 1997; 62 FR 33478, June 23, 1997]

§61.156 Vessels; disinsecting.

Vessels required to be disinsected under §61.155 shall be disinsected as follows:

(a) The insecticide used shall be an aerosol of a type approved by the Chief, Occupational Health Division;

(b) The insecticide shall be dispensed in the amount to be determined by the Chief, Occupational Health Division and released or sprayed throughout all accessible compartments;

(c) The ventilating system shall be stopped and all openings to the exterior kept closed while the insecticide is being released or sprayed for a period of at least 15 minutes thereafter.

VESSELS SUBJECT TO COMMUNICABLE DISEASE SURVEILLANCE INSPECTION

§61.171 General provisions.

(a) A vessel arriving in Panama Canal waters shall undergo communicable disease surveillance inspection prior to entry unless:

(1) In the current voyage the vessel has not touched at any port other than a port determined by WHO, the quarantine officer of the Government of Panama or the Centers for Disease Control of the United States Public Health Service to be in an area that is exempt from communicable disease surveilliance; or

(2) In the current voyage the vessel has received pratique at a port of Panama or a port of the United States, and since receiving such pratique has met the requirements of paragraph (a)(1) of this section; or

(3) Pratique has been granted by a Chief, Occupational Health Division prior to the arrival of the vessel at the Panama Canal.

(b) A vessel otherwise exempt from inspection under the provision of paragraph (a)(1), (2), or (3) of this section shall undergo communicable disease inspection prior to entering the Panama Canal if the vessel—

(1) Has on board, or during the current voyage has had on board, a person infected or suspected of being infected with any serious human or animal disease manifested by fever, diarrhea, skin rashers or other suspicious symptoms;

(2) Arrives directly from a port where at the time of departure there was present or suspected of being present cholera, plaque, or yellow fever.

(3) Being exempt from inspection under the provisions of paragraph (a)(1) of this section, or arrival at the Panama Canal has on board a person who has been in a port or area which is not exempt from communicable disease surveillance within 14 days prior to such arrival; or,

(4) Being exempt from inspection under the provisions of paragraph (a)(1) or (3) of this section, on arrival at the Panama Canal has on board an animal or article that does not comply with the admission requirements contained in this part or prescribed by the Government of Panama.

(c) Notwithstanding the provisions of paragraphs (a) (2) and (3) of this section, a vessel having received pratique at a port of Panama or a port of the United States—

(1) Shall comply with any conditions and carry out any additional measures specified in the pratique; and

(2) May be required to undergo communicable disease surveillance inspection if the Chief, Occupational Health Division has reason to believe that the entry or departure of the vessel would be likely to cause the introduction of communicable disease.

§ 61.172 Exempt vessels subject to sanitary regulations.

A vessel which has been exempted from communicable disease surveillance inspection under § 61.171 shall nevertheless be subject to the provisions of §§ 61.241 through 61.244.

§ 61.173 Report of disease or rodent mortality on vessel during stay in port.

The master of a vessel which has entered the Panama Canal to dock in a port of Panama shall promptly report to the Chief, Occupational Health Division before re-entering the Panama Canal the occurrence of the following on the vessel during its stay in port:

(a) A known or suspected case of communicable disease included in the list or description in § 61.154.

(b) Unusual mortality or evidence of disease among rodents.

GENERAL REQUIREMENTS UPON ARRIVAL AT THE PANAMA CANAL

§ 61.191 Applicability.

The measures prescribed in §§ 61.192 through 61.201 shall be taken with respect to vessels which are subject to communicable disease surveillance inspection pursuant to §§ 61.171 and with respect to persons and things arriving on such vessels.

§ 61.192 Vessels; awaiting inspection.

(a) A vessel which must undergo communicable disease surveillance inspection prior to entry shall fly a yellow flag and, except as provided in paragraph (b) of this section, shall anchor in the prescribed anchorage and await inspection.

(b) If the vessel is to dock in a port of Panama, the Chief, Occupational Health Division, after reaching agreement with the port quarantine officer of the Government of Panama, may authorize the vessel to proceed to a point within the port to await further inspection.

(c) There will be no movement of any person or thing onto or from the vessel without the permission of the port quarantine officer of the Government of Panama pending communicable disease surveillance inspection by appropriate personnel.

§ 61.193 Maritime communicable disease surveillance declaration.

(a) Upon arrival of a vessel, her master shall complete and sign a maritime communicable disease surveillance declaration on the Panama Canal Commission Communicable Disease Surveillance Declaration form. This form is also referred to as the Ship Information and Quarantine Declaration (SIQD). The SIQD shall also be signed by the ship's surgeon if one is carried. The signed form shall be delivered to the Commission's boarding officer (admeasurer) when he boards the vessel. The original shall be retained in the Office of Admeasurement. Copies will be sent to the port quarantine officer of the Government of Panama and the Panamanian Ministry of Health. A copy shall be given to the master of the vessel as well.

(b) The master of a vessel and the ship's surgeon, if one is carried, shall furnish all information as to health conditions on board during the voyage which may be required by the Chief, Occupational Health Division, and shall comply with the regulations in this subpart and with any directions or requirements of the Chief, Occupational Health Division, pursuant to the regulations in this subpart.

(c) See Ship Information and Quarantine Declaration, §101.10.

(Approved by the Office of Management and Budget under control number 3207–0001)

[51 FR 21361, June 12, 1986, as amended at 62 FR 33748, June 23, 1997]

§61.194 Persons; restrictions on boarding and leaving vessels, or having contact with persons aboard.

Except with the permission of the Chief, Occupational Health Division or the port quarantine officer, no person other than the pilot may board a vessel subject to communicable disease surveillance inspection until after it has been inspected by the Chief, Occupational Health Division or port quarantine officer and granted pratique. A person boarding the vessel shall be subject to the same restrictions as those imposed on the persons on the vessel. A person may not leave or be permitted to leave a vessel subject to communicable disease surveillance inspection until after it has been inspected by the Chief, Occupational Health Division or port quarantine officer and granted pratique, except with the permission of the Chief, Occupational Health Division or port quarantine officer.

§61.195 Communicable disease surveillance inspection and controls.

(a) Communicable disease surveillance inspection of vessels may include, but is not limited to, the following:

(1) Inspection of the vessel, its cargo, manifests, and other papers to ascertain the sanitary history and condition of the vessel; and

(2) Examination of the persons aboard the vessel, their personal effects and records to determine the presence, or risk or introduction, of quarantinable and other communicable diseases.

(b) The Chief, Occupational Health Division may require a vessel to remain under communicable disease surveillance controls until the completion of the measures authorized in this subpart which in his/her judgment are necessary to prevent the introduction or spread of a quarantinable or other communicable disease.

[51 FR 21361, June 12, 1986, as amended at 62 FR 33748, June 23, 1997]

§61.196 Persons; examination.

If a vessel that is subject to communicable disease surveillance inspection carries a ship surgeon, the examination of persons on board may be limited to those designated by the port quarantine officer of the Government of Panama.

§61.197 Vessels; persons and things; communicable diseases other than quarantinable diseases.

Whenever the Chief, Occupational Health Division has reason to believe that an arriving vessel has a person aboard who is suffering or has been exposed to any of the communicable diseases listed in §61.154 of this chapter or has an article or thing aboard that is contaminated with any of the same communicable diseases, he will report these findings to the Quarantine Office of the Government of Panama and take whatever measures are indicated to prevent the spread of the communicable disease to the Republic of Panama and to the Panama Canal Commission personnel boarding the vessel.

§61.198 Persons; isolation.

Persons held under isolation or surveillance pursuant to these provisions shall not have contact with other persons except by permission of the Chief, Occupational Health Division.

§61.199 Furnishing of fresh crew.

After a vessel has been cleared by the Chief, Occupational Health Division, it may be furnished with a fresh crew. Crew members boarding the vessel must clear the Quarantine, Immigration and Customs offices of the Government of Panama.

§ 61.200 Disinfection of cargo.

When the freight manifest of a vessel lists articles which may require disinfection under the provisions of this subpart, the Chief, Occupational Health Division shall:

(a) Request veterinary assistance to inspect and disinfect them on board if the vessel is for transit only.

(b) Notify the port quarantine officer of the Government of Panama if the vessel will enter a port of Panama so that the articles can be disinfected or kept separate from other freight in the port pending appropriate disposition.

§ 61.201 Exemption for mails.

Except to the extent that mail contains any of the foods or beverages specified in § 61.222(d) which the boarding officer (admeasurer) has reason to believe comes from a cholera-infected area, or any dog or cat subject to communicable disease surveillance restrictions under §§ 61.281, this subpart shall not render liable to detention, disinfection, or destruction any mail conveyed under the authority of the postal administration of the United States or of any other Government.

[51 FR 21361, June 12, 1986, as amended at 62 FR 33748, June 23, 1997]

PARTICULAR REQUIREMENTS UPON ARRIVAL AT THE PANAMA CANAL

§ 61.221 Applicability.

In addition to the requirements of §§ 61.192 through 61.201, the particular requirements prescribed in §§ 61.222 through 61.229 for persons, vessels, animals, and cargo shall be observed with respect to vessels which are subject to communicable disease surveillance inspection under §§ 61.171. The particular requirements of § 61.226 shall be observed irrespective of whether the vessels are subject to communicable disease surveillance inspection.

§ 61.222 Cholera; vessels and things.

(a) For the purpose of applying sanitary and quarantine measures against the spread of cholera:

(1) An infected vessel means a vessel which has on board on arrival a case of cholera-like diarrhea or on which a case of cholera has occurred within 5 days prior to arrival.

(2) A suspected vessel means a vessel which has had on board during the voyage a severy case of cholera-like diarrhea more than 5 days prior to arrive.

(b) An infected or suspected vessel shall be detained in quarantine as may be necessary for the effective accomplishment of the applicable sanitary measures prescribed in this subpart.

(c) Personal effects and baggage of an infected person or suspect and and part of the infected or suspected vessel considered to be contaminated shall be disinfected. Bedding or linen, human ejecta, bilge water, waste matter or water, and matter considered to be contaminated may not be unloaded or discharged until it has been disinfected by the quarantine officer of the Government of Panama.

(d) On arrival of an infected or suspected vessel, or a vessel arriving from an infected area, the boarding officer (admeasurer) may prohibit entrance into Panama Canal waters of such vessel until arrangements have been made with the quarantine officer of the Government of Panama at the ports of Panama for evaluation of all fish, shellfish, fruit or vegetables to be consumed uncooked unless such food or beverages are in sealed containers. The quarantine officer of the port of Panama will also evaluate any such food or beverages that form part of the ship's stores.

(e) If the boarding officer (admeasurer) considers the water supply of a cholera infected or suspected vessel to be contaminated, he shall require the disinfection and removal of any water carried on board and if necessary the disinfection of the water system and of the water containers. The ship will be instructed not to dispose of any potentially contaminated water of feces into Canal waters.

[51 FR 21361, June 12, 1986, as amended at 62 FR 33748, June 23, 1997]

§ 61.223 Cholera; vessels; persons.

(a) Persons ill from cholera shall be isolated and immediate arrangements shall be made with the Quarantine Office of the Government of Panama for treatment of the person.

(b) On arrival of an infected vessel the Chief, Occupational Health Division shall contact the port quarantine officer of the Government of Panama to arrange placement under isolation of all persons disembarking.

(c) On arrival of a suspected vessel the boarding officer (admeasurer) shall contact the port qurantine officer of the Government of Panama to arrange placement under surveillance or isolation of any person disembarking.

(d) The quarantine officers of the Government of Panama shall be contacted regarding isolation or surveillance of any person wishing to disembark from a vessel which within five days prior to arrival has departed from a cholera-infected area or arrives on a vessel which has departed from such an area.

(e) A person who has departed from an infected area within 5 days prior to arrival and who has symptoms indicative of cholera may be required to submit to a stool examination.

[51 FR 21361, June 12, 1986, as amended at 62 FR 33748, June 23, 1997]

§61.224 Plague; vessels.

(a) For the purpose of applying sanitary and quarantine measures against the spread of plague:

(1) An infected vessel means a vessel which has on board on arrival a case of human plague, or a plague infected rodent. A vessel shall also be regarded as infected if a case of plague develops on board in a person more than 6 days after his embarkation.

(2) A suspected vessel means (i) a vessel which, not having a case of human plague on board on arrival, has had on board such a case developed by the person within 6 days of his embarkation, or (ii) a vessel on which there is evidence of abnormal mortality of rodents on board, the cause of which is not known on arrival.

(b) An infected or suspected vessel shall be detained in quarantine as may be necessary for the effective accomplishment of the applicable sanitary measures prescribed in this subpart.

(c) On arrival of a vessel which has rodent plague on board the boarding officer (admeasurer) shall contact the port quarantine officer of the Government of Panama to arrange deratting of the vessel. A vessel which has entered a Panamanian port in or adjacent to Panama Canal waters will not be allowed to re-enter Panama Canal waters until the following provisions have been met during such deratting:

(1) The deratting shall be carried out as soon as the holds have been emptied.

(2) One or more preliminary derattings of a vessel with the cargo in situ, or during its unloading, may be carried out to prevent the escape of infected rodents.

[51 FR 21361, June 12, 1986, as amended at 62 FR 33748, June 23, 1997]

§61.225 Plague; vessels; persons; things.

(a) Persons ill from plague shall be isolated until arrangements are made with the quarantine office of the Government of Panama for quarantine and treatment of the person.

(b) On arrival of an infected or suspected vessel the boarding officer (admeasurer) may:

(1) Require any suspect on board to be disinsected and may place him under surveillance, the period of surveillance being reckoned from the data of arrival of the vessel;

(2) Require the disinsecting and, if necessary, disinfection of the baggage of any infected person or suspect and of any other article such as used bedding or linen; and any part of the vessel which the boarding officer (admeasurer) considers to be contaminated.

(c) On the arrival of a healthy vessel which has come from a plague-infected area the boarding officer (admeasurer) may—

(1) Arrange placement under surveillance by the quarantine officer of the Government of Panama of any suspect who disembarks.

(2) Require the deratting of the vessel at the anchorage in exceptional circumstances. In such case, the master shall be informed in writing of the reasons for the action.

[51 FR 21361, June 12, 1986, as amended at 62 FR 33748, June 23, 1997]

§ 61.226 Yellow fever; vessels; classification.

For the purpose of applying sanitary and quarantine measures against the spread of yellow fever:

(a) An infected vessel means a vessel which has on board on arrival or which during its voyage had on board a case of yellow fever.

(b) A suspected vessel means a vessel which has left a yellow fever-infected area within 6 days prior to arrival or which arriving within 30 days after leaving such area has Aedes aegypti mosquitoes on board.

§ 61.227 Yellow fever; vessels; persons.

(a) On arrival of an infected vessel the boarding officer (admeasurer) shall contact the quarantine officer of the Government of Panama to coordinate removal and isolation of all persons ill with yellow fever until they are no longer infectious.

(b) The boarding officer (admeasurer) will inform the quarantine office of the Government of Panama of the arrival of any person from an infected area or planning to disembark from an infected or suspected vessel who does not produce a valid certificate of vaccination against yellow fever.

[51 FR 21361, June 12, 1986, as amended at 62 FR 33748, June 23, 1997]

SANITARY INSPECTION: RODENT AND VERMIN CONTROL

§ 61.241 General provisions.

(a) Vessels entering Panama Canal waters are subject to sanitary inspection in accordance with § 61.241 through 61.244 to ascertain whether there exists rodent, vermin, or insect infestation, contaminated food or water, or other unsanitary conditions requiring measures for the prevention of the introduction, transmission, or spread of communicable disease.

(b) The Chief, Occupational Health Division of the Panama Canal Commission may require such measures with respect to such vessels as are deemed necessary to:

(1) Carry out the Commission's responsibilities as set forth in the Panama Canal Treaty of 1977 in regards to preserving the health of the employees of the Commission and the sanitation of Panama Canal areas and waters;

(2) Comply with the recommendations of the World Health Organization;

(3) Effect those measures deemed necessary by the Government of Panama;

(4) Prevent the entrance into Panama or the international spread of other communicable diseases designated as a serious threat.

§ 61.242 Disinsecting and disinfection; vessels and persons.

Except as otherwise provided in this subpart—

(a) Vessels may be disinfected on arrival if the Chief, Occupational Health Division considers disinfestation necessary to prevent the spread of infection or for the destruction of insects and vermin capable of transmitting communicable disease.

(b) The person, effects and baggage of any vermin-infested person arriving aboard a vessel shall be disinsected and, if necessary, in the judgment of the boarding officer (admeasurer), disinfected.

[51 FR 21361, June 12, 1986, as amended at 62 FR 33748, June 23, 1997]

§ 61.243 Deratting Certificates; Deratting Exemption Certificates.

(a) If a valid Deratting Certificate or Deratting Exemption Certificate is not produced with respect to any arriving vessel—

(1) If the vessel will only transit the Panama Canal and the boarding officer (admeasurer) is satisfied that the vessel is free of rodents or is kept in such a condition that the number of rodents on board is negligible, the boarding officer (admeasurer) may clear it for transit. If it is determined that a deratting certificate shall not be issued with respect to the vessel, the boarding officer (admeasurer) shall notify the Commission's Marine Traffic Control Center and the Port Quarantine Office of the Government of Panama.

(2) If the vessel will stop in the ports of Balboa or Cristobal, the boarding officer (admeasurer) will report his findings and recommendations to the Port Quarantine Office of the Government of Panama.

(b) [Reserved]

[51 FR 21361, June 12, 1986, as amended at 62 FR 33748, June 23, 1997]

§61.244 Vessels in traffic between the United States and Panama.

Notwithstanding any other provision of this subpart, vessels engaged in trade between ports of the United States or Panama on entering Panama Canal waters shall be subject to sanitary inspection and measures as described in §§61.241 through 61.243, when arriving from a port infected or suspected of being infected with a quarantinable disease or when illness on board indicates unsatisfactory sanitary conditions.

PRATIQUE: VESSELS

§61.261 General requirements.

Vessels subject to communicable disease surveillance inspections under the provisions of §61.171 may not enter Panama Canal waters unless a certificate of free pratique or provisional pratique has been granted to the master. When it is not feasible to comply with the requirements for free or provisional pratique, the vessel is at liberty to return to sea:

§61.262 Free pratique.

The granting of free pratique signifies that the vessel and its master may enter Panama Canal waters.

§61.263 Provisional pratique.

(a) Provisional pratique signifies the vessel may proceed, but additional measures regarding the sanitary condition of the vessel, as specified, must be taken in connection with the entering or proceeding through the Canal. Free pratique shall be issued after the additional measurers have been completed.

(b) The boarding officer (admeasurer) may notify the next port of such additional measures as may be indicated for a particular vessel to proceed there. The boarding officer (admeasurer) may contract the quarantine stations at the next port of call regarding additional measures indicated.

[51 FR 21361, June 12, 1986, as amended at 62 FR 33748, June 23, 1997]

§61.264 Radio pratique.

The boarding officer (admeasurer) may grant pratique to a vessels upon the basis of information regarding the vessel, its cargo and persons aboard, received prior to arrival of the vessel, when in his judgment, and in accordance with general standands set by the Chief, Occupational Health Division of the Commission and the Ministry of Health of the Government of Panama, the entry of the vessel will not result in the introduction, transmission or spread of communicable diseases.

[51 FR 21361, June 12, 1986, as amended at 62 FR 33748, June 23, 1997]

IMPORTATION OF DOGS AND CATS

§61.281 Quarantine of dogs and cats.

The owner or person in charge of any dog or cat entering the Panama Canal area from outside the Republic of Panama shall make arrangements with the appropriate veterinary authorities for entry of the animal.

Subpart F—Pest Exterminators

§61.311 License required to engage in business of pest extermination.

(a) A firm, establishment, company, corporation, or individual doing business in his own name may not engage in the business of extermination of pests such as rats, roaches, ticks, termites, ants, or other harmful insects or rodents, unless licensed to do so by the Health Director of the Canal Zone Government.

(b) The Health Director may not license an applicant as a pest exterminator unless it is established to the satisfaction of the Health Director:

(1) That a sufficient number of its personnel are licensed under §61.312 to ensure its capacity to conduct its business in conformity with the regulations in this subpart; and

(2) That it is otherwise properly qualified and competent to conduct such business.

CROSS REFERENCE: See also 2 C.Z.C. 872, 76A Stat. 33, for certain statutory requisites applicable to corporations doing business in the Canal Zone.

§ 61.312 Licensed foreman required to be in charge.

(a) Each crew or gang of pest exterminators performing pest eradication shall be under the direct and immediate supervision of a foreman or gang leader licensed as a pest exterminator under this section.

(b) In order to be licensed as a pest exterminator the applicant must establish to the satisfaction of the Chief, Division of Sanitation of the Health Bureau of the Canal Zone Government, or such person as the Health Director designates to issue such licenses, that he is familiar with the accepted methods of dispensing insecticides and rodenticides, with their toxicity and other significant qualities, and with safety precautions to be observed in their use.

§ 61.313 Possession and display of licenses.

The foreman or leader of each crew or gang of pest exterminators performing pest eradication shall have in his possession a legible copy of the license issued to him under § 61.312 and a legible copy of the license issued to his employer under § 61.311 and shall display such licenses on demand of personnel of the Health Bureau or of the Canal Zone Police.

§ 61.314 Renewal of licenses; suspension and revocation.

(a) Licenses issued under §§ 61.311 and 61.312 shall be renewed annually. The licensing authority may require the same kind of showing of qualification of an applicant for renewal of a license as is required of an applicant for an original license. Licenses may be suspended at any time by the issuing authority, without prior notice to the licensee, for failure to comply with these regulations or with the terms of the license or for other good and sufficient cause.

(b) A suspended licensee shall be entitled to a hearing if he requests it within 10 days after receiving notice of the suspension. The hearing, if requested, shall be held by the licensing authority or his designee within 10 days of the request therefor or within such later period as may be acceptable to the suspended licensee and the licensing authority. Upon completion of the hearing, or if no hearing is requested, the licensing authority shall:

(1) Removal of the suspension;

(2) Extend the suspension for a fixed period; or

(3) Revoke the license.

(c) A former licensee whose license has been revoked is not eligible to apply for a new license until expiration of a period of 1 year following the revocation.

§ 61.315 Approval of types, concentrations, and manner of use of insecticides and rodenticides required.

Licensees under §§ 61.311 and 61.312 may use only such insecticides or rodenticides and only such concentrations thereof and may employ only such techniques as the Chief of the Sanitation Division approves, in writing, for each licensee under § 61.311.

§ 61.316 Sale of insecticides and rodenticides.

The sale of insecticides and rodenticides is prohibited. This section does not prohibit pest exterminators who are issued licenses under §§ 61.311 and 61.312 from dispensing approved insecticides and rodenticides in the performance of pest eradication and including the cost thereof in the charges for the service.

§ 61.317 Inapplicability to Government agencies and their officers and employees.

The provisions of this subpart do not apply to agencies or instrumentalities of the United States or to their officers or employees who use, handle, dispense, or sell insecticides or rodenticides in the performance of their official duties.

§ 61.318 Inapplicability to military reservations.

The provisions of this subpart do not apply within military, naval, or air force reservations.

Subparts G–H—[Reserved]

Subpart I—Authority of Governor

§ 61.381 Authority of Governor.

The Governor:

(a) May issue health and sanitation regulations respecting (1) barbers, beauticians and manicurists; (2) examination of food handlers and the inspection of food-handling establishments; (3) foods and beverages; and (4) pest extermination; and

(b) Shall administer the provisions of this part.

PART 67—CANAL ZONE POSTAL MONEY ORDERS AND SAVINGS CERTIFICATES

Subpart A—General Provisions

Sec.
67.1 Authority.
67.2 Scope.

Subpart B—Canal Zone Money Order System

67.11 Scope of the subpart.
67.12 Applicability of Federal postal laws and regulations.
67.13 U.S. Postal Service restrictions.
67.14 Payment.
67.15 General procedures for payment of outstanding Canal Zone money orders.
67.16 Period of validity.
67.17 Who may receive information.
67.18 Inquiries regarding payment.
67.19 Duplicate money orders; application for payment of mutilated or lost money orders.
67.20 Acceptance of application for refund payment.
67.21 Money orders recovered after duplicate issued.

Subpart C—Canal Zone Postal Savings System

67.31 Purpose and designation of depository.
67.32 Scope of this subpart.
67.33 Retroactive application.
67.34 Applicability of Federal postal laws and regulations.
67.35 Care and protection of records.
67.36 Interest.
67.37 Payment of postal savings certificates.
67.38 General procedures for payment of postal savings certificates.
67.39 Privacy of accounts.
67.40 Claims.
67.41 Disposal of paid postal savings certificates.
67.42 Replacement of certificates.
67.43 Payment of duplicate certificate.
67.44 Disposition of recovered certificate.

AUTHORITY: Sec. 1331, Pub. L. 96–70, 93 Stat. 481; EO 12173, 44 FR 69271.

Source 44 FR 75324, Dec. 19, 1979, unless otherwise noted.

Subpart A—General Provisions

§67.1 Authority.

The provisions of Chapter 73 of the Panama Canal Code relating to postal savings deposits, postal savings certificates, postal money orders and the accounting for funds shall continue to apply for the purpose of meeting the obligations of the United States concerning outstanding postal savings and money orders and disposition of funds.

§67.2 Scope.

The regulations in this part govern the procedures to be followed in redeeming outstanding Canal Zone postal savings deposits, postal savings certificates and postal money orders.

Subpart B—Canal Zone Money Order System

§67.11 Scope of the subpart.

This subpart covers procedures to be followed in the conduct of payment of outstanding Canal Zone money orders, and accounting for such transactions.

§67.12 Applicability of Federal postal laws and regulations.

The provisions of the postal laws of the United States, and of 39 CFR, relating to the payment of outstanding Canal Zone money orders, are applicable to the Panama Canal Commission, insofar as they are not in conflict with the provisions of this subpart.

§67.13 U.S. Postal Service restrictions.

Any restrictions imposed by the United States Postal Service on payment of United States postal money orders shall apply to outstanding Canal Zone money orders.

§67.14 Payment.

(a) *Place of payment.* Money orders may be paid at the Office of the Treasurer, Panama Canal Commission, which is authorized to pay outstanding Canal Zone money orders.

(b) *Canal Zone Money Orders.* A money order may be paid at full face

value when presented by the payee, endorsee, or purchaser, within the period of validity.

CROSS REFERENCE: Procedure for payment, see § 67.15. Period of validity, see § 67.16.

§ 67.15 General procedures for payment of outstanding Canal Zone money orders.

(a) *Terms of payment.* A money order shall be paid at its face value if presented by the payee, remitter or endorsee.

(b) *Examination of order.* When a Canal Zone money order is presented for payment, the Cashier, Office of the Treasurer, shall examine it to see that:

(1) It is not a form reported stolen.

(2) It is not a counterfeit.

(3) It is properly stamped and drawn by the issuing office.

(4) It does not bear any alterations or erasures.

(c) *Machine-issued orders.* The money orders issued by the print-punch machine are payable in the amount printed on and punched in the order by the machine. The money orders issued by machine are payable in the amount imprinted by machine, but for no more than the amount stamped between the words ''Not Valid For More Than'' and the word ''Pay''.

(d) *Verification.* Verification of an order presented for payment should be made by Chief, Agents Accounts Branch of the Panama Canal Commission, prior to payment by the cashier.

(e) *Identification*—(1) *General requirement.* If the payee presenting the money order is not personally known to the cashier, he must prove his identity.

(2) *Identification of payee.* Social security cards are not acceptable. Drivers permits, military identification cards, or other credential showing signature of bearer and having serial numbers or other indicia which can be traced to the holder are helpful in identification. The owner must sign the money order in the presence of the cashier. The cashier shall compare signature with identification, if possible, shall enter on the back of the order the license or serial number and full description of the identification; and shall also initial the back of the order and an impression of the agent's stamp will be affixed on the back of the order immediately on payment. This will aid in apprehending persons attempting forgery or other wrong payment.

(3) *Cashing endorsed money orders.* This procedure must be followed carefully in the case of endorsed money orders, as they might bear a forged endorsement and be in the hands of the wrong person.

(4) *Payment to wrong person.* If the cashier has taken proper care under the circumstances, the Treasurer of the Panama Canal Commission will recommend that he be relieved of financial responsibility for wrong payment.

(5) *Duties of employees.* If a cashier is unable to satisfy himself that an applicant for payment is the owner of the order, he should bring the case to the attention of his supervisor or the Treasurer.

(6) *Attempts to defraud.* Any attempt to defraud should be referred to the Treasurer by the cashier.

(7) *Requirements for signatures; etc.*—

(i) *Signature by mark.* If signature of payee or endorsee is by mark, it shall be witnessed by a person who can write, and the witness shall be someone other than the Treasurer or paying cashier.

(ii) *Signature different from name on order.* Any signature of the payee consistent with the name given on the order may be accepted by the paying cashier as sufficient, if he is satisfied that it is the genuine signature of the payee intended.

(iii) *Signature of officer.* An order drawn in favor of a public official or officer of a corporation, company, or association, as such, may be paid to his successor, if presented by the latter, who, in receipting for it, shall be required to indicate in writing the capacity in which he acts, thus: ''William Jones, Treasurer, successor to George Thompson''.

(iv) *When payee is society or corporation.* When the payee is a society or corporation, the person who has authority to receive payment of money due such payee shall receipt the order in his official capacity, and if occasion arises, the Treasurer may require satisfactory proof of such authority.

(v) *Stamped signature in receipt.* All of the requisite signatures to a money

order—those of payee, endorsee, or witness to payment—shall be written, preferably in ink; but a stamped signature may be used in place of the written signature of payee or agent of payee in receipts on money order drawn in favor of or made payable to a firm, corporation, association, society, or individual, if beneath it is written the signature of the person receiving payment or executing the endorsement. Under no circumstances may an endorsement be made by means of a perforating device.

(vi) *Signature of agent.* The paying cashier shall affix or cause to be affixed to the signature of the person receiving payment of a money order any such word or words as may be necessary to explain the right of such person to collect the amount. For instance, where an order drawn in favor of a company is paid to its local manager, the word ''Manager'' should appear beneath or opposite his signature to the endorsement.

(vii) *Use of titles.* The paying cashier shall not insist on the inclusion or the omission of a title or prefix such as ''Dr.,'' ''Rev.,'' ''Prof.,'' ''Madam,'' or ''Mrs.'' in the signature to an order, whether or not the payee is designated by such title or prefix in the body of the order.

(viii) *Order presented by payee after being endorsed by others.* When an order is presented by the payee for payment, it is immaterial what endorsements there may be on the order. Payment may be made if the order is otherwise regular and there is space for the payee to sign his name on the back of the order on or near the line above the word ''Payee'' and inconsistent or unnecessary signatures or endorsements may be canceled.

(ix) *Substitution by payee or remitter of name written in error.* The payee or the remitter of an order, but no one else, may substitute any other name for one which he has already written by mistake in the body of the first endorsement thereon, and payment may be made to the person whose name has thus been substituted, if the order is regular in other respects.

(x) *More than one payee.* Money orders completed by the purchaser to show more than one firm or person as payee may be paid to any one of them.

(f) *Stolen forms.* Money orders issued on stolen forms will not be accepted as valid vouchers for disbursements.

(g) *Procedure where duplicate issued.* If upon verification, it is established that a duplicate has been issued, the cashier to whom the order is presented shall write across it with ink the words, ''Canceled-Duplicate Issued,'' and forward the order to the Chief, Agents Accounts Branch for disposition.

(h) *Payment to other than payee.* (1) *Transfer of money orders—* (i) *By purchaser or payee.* The payee or the purchaser of a money order may endorse the order to any other person or firm. A money order may not be paid to a second person without written transfer or endorsement to him by the payee or purchaser in the prescribed form on the reverse side of the order, except as provided by paragraphs (h)(i)(ii) and (iii) of this section.

(ii) *On power of attorney.* A person with power or attorney may cash money orders in behalf of the payee who gave him that authority. The power of attorney must be filed at the office of payment.

(iii) *On separate written order of payee.* When the payee has filed with the Treasurer a separate written order authorizing payment to another person, and designating that person by name as the one to receive payment of and to receipt for any specified order, or for all orders payable by the Treasurer to the payee, that person may cash money orders on behalf of the payee.

(2) *Upon assignment.* When a person or firm makes an assignment, and the assignor intends that money orders payable to him will be paid to assignee, he should execute a power of attorney to give such written order separate from the instrument of assignment, to be filed in the Office of the Treasurer. The person designated to receive payment should receipt the money order as such, indicating beneath his signature the capacity in which he acts.

(3) *On death of payee.* A money order belonging to a deceased remitter or payee may be paid to the executor or administrator of the estate appointed by the court. A certified copy of the appointment shall be filed with the

Treasurer. If the estate is small and administration is not desired, payment shall be made in accordance with the Panama Canal Code. Whenever a money order belonging to a deceased remitter or payee is presented for payment, the Treasurer should be informed and payment therefor withheld until instructions for payment are received.

CROSS REFERENCE: Laws on succession, see 7 P.C.C. 501, *et seq.*

(4) *To concern which has ceased to exist.* A money order payable to a firm, bank, or company which has ceased to exist shall be paid to the legal representative thereof.

(5) *To committee or guardian.* When a committee, guardian, or other person is appointed by a court to act for a person declared incompetent, money orders shall not be paid to the ward. All money orders showing the ward as payee or endorsed shall be paid only to the committee, guardian, or other duly designated person, who shall exhibit to the postmaster the authority thus to act for the ward. Such money orders shall be receipted in the name of the ward, followed by the signature and legal designation of the committee, guardian, or other authorized agent.

(6) *To minor.* A money order payable to a minor may be paid to the father or mother thereof as natural guardian, unless legal proceedings have been instituted which make questionable the claim of the father or mother, in which case the facts should be reported to the Treasurer.

(i) *Discrepancies or alterations.* If there is any doubt as to the particulars on a Canal Zone money order, verification of the order should be made with Chief, Agents Accounts Branch.

(j) *Payment of remitter.* A money order presented by the remitter may be refunded at the Office of the Treasurer upon proper identification.

(k) *Payment of order withheld*—(1) *Invalid orders.* Provisions relating to the payment of invalid Canal Zone money orders are contained in § 67.16.

(2) *Nonpayment because of fraud*—(i) *Proof.* If the purchaser has proof that the order was purchased because of false representations or other fraudulent action of the payee, or that the payee is engaged in conducting a scheme or device for obtaining money fraudulently through the mails, the purchaser may request the Treasurer to withhold payment.

(ii) *Orders forbidding payment.* Payment of a money order should not be made under any circumstances to a specific person or firm when an order has been issued by the Treasurer forbidding payment of money orders to such persons or firms.

§ 67.16 Period of validity.

As provided by 2 P.C.C. 1142, 76A Stat. 40, money orders issued by the Canal Zone Postal Service may not be paid after 20 years from the last day of original issue. Claims for unpaid money orders shall be forever barred unless received by the Panama Canal Commission Treasurer within such 20-year period. Special authority shall be obtained from the Chief, Agents Accounts Branch, to pay or refund a Canal Zone money order presented after one year from the last day of the month in which it was issued and prior to the expiration of the 20-year period.

§ 67.17 Who may receive information.

Information concerning money order transactions may be given only to the purchaser, payee, or endorsee, or his agent, or to a representative of the Agents Accounts Branch, the Office of the Treasurer, and the Postal Assistance Unit of the Panama Canal Commission.

§ 67.18 Inquiries regarding payment.

Inquiries concerning the payment of a money order shall be made to the Chief, Agents Accounts Branch on PS Form 6401 or by direct correspondence.

§ 67.19 Duplicate money orders; application for payment of mutilated or lost money orders.

(a) Duplicate money orders shall not be issued after September 28, 1979.

(b) A duplicate money order issued prior to September 29, 1979, may be paid at the Office of the Treasurer.

(c) A duplicate money order is payable only to the payee named thereon or his endorsee.

(d) An application for payment of a mutilated or lost money order may be

accepted and certified by Chief, Agents Accounts Branch and honored by the Treasurer if the mutilated order accompanies the application or the original money order has been inadvertently destroyed and the person in whose favor the application is made submits evidence, in the form of affidavits or otherwise as Chief, Agents Accounts Branch deems sufficient to establish a valid claim to the original order.

§67.20 Acceptance of application for refund payment.

(a) An application for refund payment on a money order may be accepted by the Chief, Agents Accounts Branch.

(b) An application for refund payment of a money order alleged to have been lost, stolen or destroyed may be accepted only from the purchaser, or the holder of the purchaser's receipt, and payment shall be issued if the person in whose favor the application is made submits evidence in the form of affidavits or otherwise, as the Chief, Agents Accounts Branch deems sufficient to establish a valid claim to the original order and the original order has not be been paid.

(c) The complete name and address of the person or firm to whom the money order was sent, as well as the complete name and last known address (house number, street, and post office) of the person to whom the refund payment is to be paid, shall be determined from the applicant by inquiry.

§67.21 Money orders recovered after duplicate issued.

When a money order alleged to have been lost comes into the possession of the remitter, payee, or endorsee thereof after application for a refund payment has been made, the paying cashier to whom the order is presented shall notify Chief, Agents Accounts Branch by memorandum. If a duplicate or refund payment has not been issued in lieu thereof, the Chief, Agents Accounts Branch, may authorize the payment or refund of such original order. If upon verification, it is evident that a duplicate or refund payment has been issued, the cashier to whom the order is presented shall write across it the words ''Canceled—Duplicate/Refund Payment Issued,'' and the order shall be sent to Chief, Agents Accounts Branch for disposition.

Subpart C—Canal Zone Postal Savings System

§67.31 Purpose and designation of depository.

The postal savings system was established to provide facilities for the deposit of savings at interest with the security of the United States Government for repayment. As a result of the discontinuance of the Canal Zone Postal Service, effective October 1, 1979, the Treasurer of the Panama Canal Commission has been designated as the sole postal savings depository.

§67.32 Scope of this subpart.

This subpart covers the procedures to be followed in the payment of outstanding postal savings certificates and the accounting for such transactions.

§67.33 Retroactive application.

This subpart applies equally to money orders or deposit orders issued in lieu of postal savings certificates prior to September 29, 1979. Such orders may have been endorsed or were known at various times as follows:

''Money Order''—''Deposit Money Order'';
''Non-Transferable Deposit Money Order'';
''Non-Transferable—Payable to Depositor Only'';
''Pay Depositor Only at Office of Issue.''

§67.34 Applicability of Federal postal laws and regulations.

The provisions of the postal laws of the United States, and of 39 CFR, relating to the payment of postal savings certificates, are applicable to the Panama Canal Commission, insofar as they are not in conflict with the provisions of this subpart.

CROSS REFERENCE: Postal savings system, see 39 U.S.C. 5201 *et seq.*; postal savings, see 39 CFR Part 173.

§67.35 Care and protection of records.

All unpaid stubs and any current postal savings statements, records, or files relating to unpaid accounts shall be placed and maintained in a vault or

safe when not actually required for an official transaction. All such records shall be placed in the vault or safe during alerts or disaster periods. The Chief, Agents Accounts Branch, shall give this matter his personal attention and shall be held accountable for the proper protection of the records.

§ 67.36 Interest.

(a) *Rate.* Postal savings certificates shall bear interest at the rate of one-half of one percentum for each period of three full months from the date of issue.

(b) *Interest period*—(1) *''Three full months''.* In computing interest, the term ''three full months'' shall be considered as follows:

(i) If a certificate was issued on the last day of the month, interest is due and payable on the last day of the month, regardless of the number of days in such month, except that:

(A) If the last day of the month falls on a Sunday or holiday, interest is not payable until the first day of the following month.

(B) If the certificate was issued February 28, interest is due and payable May 28, August 28, etc. Interest on certificates issued August 31, therefore, would be due and payable November 30, February 28, and May 31.

(ii) If a certificate was issued other than on the last day of the month, interest is due and payable three months from the actual date of issue.

(A) If issued January 15, interest is due April 15.

(B) If issued February 1, interest is due May 1, etc.

(iii) When the computation of interest results in fraction of a cent, the fraction shall be dropped.

(c) *When paid.* Interest shall be paid only when the certificate is paid.

(d) This section applies to all outstanding deposit money orders and postal savings certificates issued prior to September 29, 1979.

(2 P.C.C. sec. 1134, 76A Stat. 39).

§ 67.37 Payment of postal savings certificates.

(a) *On demand at Office of the Treasurer.* Upon certification by a designated Agents Accounts Branch representative, postal savings certificates shall be authorized for payment only to the depositor by either cash through the Office of the Treasurer of the Panama Canal Commission or by a Panama Canal Commission check. In the case of a joint account, the certificates shall be payable to the signature of either of the depositors or the survivor. To terminate a joint account, all orders payable to the two persons jointly must be presented and cashed.

(b) *In person.* The certifcate shall be paid to the depositor on proper identification and certification by the designated Agents Accounts Branch representative. Payment may be made by cash only at the Office of the Treasurer or by a Panama Canal Commission check.

(c) *By mail*—(1) *Requisites.* Withdrawals may be made by mail, if the certificates are properly signed by the depositor and forwarded to the Chief, Agents Accounts Branch, and he is satisfied as to the identity of the depositor.

(2) *Manner of payment.* Payment shall be made by check, which shall be sent by registered mail. Before mailing the payment, the registry fee and postage, shall be deducted.

(d) *Payment of certificates of deceased depositors*—(1) *Payment to representative.* After the death of a depositor, certificates in his or her favor shall be paid to the duly authorized executor or administrator of the estate or other person only upon the authority of the Chief, Agents Accounts Branch. When it is known that a depositor has died, the stubs should be ''flagged'' and held to the credit of the deceased depositor.

(2) *Survivor of joint depositors.* After the death of either of two joint depositors, when a ''Joint Depositor's Agreement'' has been completed, the certificates remaining unpaid become the sole property of the survivor and may be paid to the survivor without the authority of the Chief, Agents Accounts Branch.

(e) *Payment of certificates to incompetent depositors.* In cases of mental disability or other legal incompetence of a depositor, the Chief, Agents Accounts Branch should contact the General Counsel of the Panama Canal Commission for instructions.

(f) *Identification.* The person presenting a postal savings certificate must

identify himself before payment is made. Section 67.15(e) covering payment of money orders, shall govern in the payment of postal savings certificates.

§67.38 General procedures for payment of postal savings certificates.

(a) *Examination of the certificate.* Postal savings certificates presented for payment must be validated by the designated Agents Accounts Branch representative prior to effecting payment. The representative shall examine the certificate and compare it with all particulars on the post office stub and the list of outstanding certificates to ascertain if the certificate is valid for payment and if the certificate is in order. A payment authorization will be prepared and forwarded to the Office of the Treasurer.

(b) *Signatures.* The certificate shall be signed by the depositor on the back in the presence of the Panama Canal Commission cashier who shall verify all particulars entered thereon. When in doubt, a signature should be verified with that which appears on the corresponding application, joint account card or the representative of depositor's card (Form 2105). The person presenting the certificate must identify himself before payment is made. If a certificate is paid to the wrong person through lack of precaution, the paying cashier will be held accountable for the amount of the certificate.

(c) *Interest Due*—(1) *Notation of interest.* When a certificate is paid, the total amount of interest due shall be shown in red ink in the ''Interest'' block of the certificate and stub of the postal savings certificate. When no interest is paid, a straight line in red ink shall be drawn across the ''Interest'' blocks. Once the amount of interest is written on the certificate, no change or alteration shall be permitted.

(2) *Errors*—(i) *Underpayment of interest.* If an underpayment of interest has been made after figures have been entered in the interest block on a certificate, paying cashier shall receive a payment voucher Panama Canal Commission Form 5128 for cash payment from the depositor when the additional amount is paid to him. The payment voucher shall be returned to Agents Accounts Branch for their office records. Requests for payment by check shall be accomplished on Panama Canal Commission Form 3162. The amount of unpaid interest shall not be set aside for the depositor pending his response to a notice to call, and credit shall not be taken until the short payment has actually been made to the depositor.

(ii) *Overpayment of Interest.* The Chief, Agents Accounts Branch will establish procedures for the recovery of overpayments.

(d) *Date of payment.* A clear impression of the Agent's stamp shall be placed in proper space on back of the certificate and on the back of the corresponding office stub. The date affixed by the cashier shall be the actual day of payment.

(e) *Initiating paid certificates.* The Chief, Agents Accounts Branch shall establish procedures for identifying paid savings certificates, specifically as it relates to the original certificates and corresponding stub.

(f) *Issuance of duplicate as precluding payment.* The original postal savings certificate shall NOT be paid under any circumstances if a duplicate postal savings certificate was issued prior to September 29, 1979.

(g) *Filing paid stubs.* The stubs of paid certificates shall be filed in numerical sequence in a file covering the calendar year in which paid.

(h) *Final determination regarding payment.* Final determination as to whether payment has been properly made on postal savings certificates or other evidences of deposit in the postal savings of the former Canal Zone Postal Service including duplicates, shall be based upon the official records of Agents Accounts Branch.

CROSS REFERENCE: Rate of interest, see §67.36.

§67.39 Privacy of accounts.

Agents Accounts Branch employees shall not disclose the name of any postal savings depositor nor give information concerning a particular account to any person other than the depositor himself, without specific authority from the Chief, Agents Accounts Branch.

§ 67.40 Claims.

(a) *Dispute as to ownership or claim by another person.* When there is any dispute as to the ownership, or when a claim by a person other than the depositor is made for payment, the designated Agents Accounts Branch representative shall withhold payment authorization of withdrawals from the account involved pending instructions from the Chief, Agents Accounts Branch.

(b) *Limitations on claims.* All claims for payment of any postal savings certificate or other evidence of deposit in the postal savings system of the former Canal Zone Postal Service issued prior to October 1, 1979, including duplicates, which are shown by the records in the possession of the Agents Accounts Branch to have been duly paid, shall be barred if not presented to the Panama Canal Commission within six years from the date on which such records show that they were paid.

§ 67.41 Disposal of paid postal savings certificates.

Postal savings certificates or other evidences of deposit in the postal savings system of the former Canal Zone Postal Service, including duplicates, may be disposed of after the expiration of six years from date payment thereon has been made as shown by the records of the Panama Canal Commission.

§ 67.42 Replacement of certificates.

Duplicate postal savings certificates shall not be issued after September 28, 1979. A postal savings certificate that is lost, stolen, destroyed or improperly withheld, shall be paid by cash or check to the depositor, in accordance with the procedures established by this subpart.

§ 67.43 Payment of duplicate certificate.

A duplicate postal savings certificate issued prior to September 29, 1979 may be paid at the Office of the Treasurer, under the same conditions governing the payment of the original postal savings certificate.

§ 67.44 Disposition of recovered certificate.

If, after a duplicate postal savings certificate was issued, the depositor reports that he has found the original certificate, he shall be instructed to surrender the original certificate. The certificate surrendered shall be endorsed with the word ''Canceled'' across its face and retained at Agents Accounts Branch as office records.

PART 70—PROCEDURES FOR CHANGING RULES OF MEASUREMENT OR RATES OF TOLLS

Sec.
70.1 Scope.
70.2 Definitions.
70.3 Official language.
70.4 Publication of notice.
70.5 Contents of notice.
70.6 Analysis for public use.
70.7 Data filed by interested parties.
70.8 Hearing.
70.9 Hearing panel.
70.10 Notice of appearance; witnesses.
70.11 Conduct of hearing.
70.12 Post-hearing revision.
70.13 Transcript.
70.14 Effective date.

AUTHORITY: Sections 1601–1604 and 1801, Pub. L. 96–70, 93 Stat. 489–492, 22 U.S.C. 3791–3794, 3811; sections 3527 and 3528, Pub. L. 104–106; EO 12215, 45 FR 36043, 3 CFR, 1981 Comp., p. 257.

SOURCE: 47 FR 8177, Feb. 25, 1982, unless otherwise noted.

§ 70.1 Scope.

These regulations establish procedures for prescribing or changing the rules of measurement of vessels for the Panama Canal and the rates of tolls that shall be levied for the use of the Canal.

§ 70.2 Definitions.

As used in this part:

(a) *Board* means the nine-member Board of the Panama Canal Commission, appointed pursuant to section 1102 of the Panama Canal Act of 1979, Pub. L. 96–70, 93 Stat. 456.

(b) *Commission* means the Panama Canal Commission.

(c) *Hearing* means a public proceeding at which interested persons are afforded an opportunity to participate in rulemaking through submission of

written data, views or arguments with or without oral presentation.

(d) *Panel* means the members of the Board of the Panama Canal Commission, who are designated by the Chairman of the Board to conduct a hearing in accordance with §70.9.

(e) *Party* includes an individual, partnership, corporation, association, or public or private organization other than an agency of the United States Government.

§70.3 Official language.

Hearings, arguments, views, and other data provided for by these rules shall be in the English language.

§70.4 Publication of notice.

The Commission shall publish in the FEDERAL REGISTER notice of any proposed change in the rules of measurement or rates of tolls. Such notice must be published at least 30 days prior to the date of the public hearing referred to in §70.8.

§70.5 Contents of notice.

The notice referred to in §70.4 shall include:

(a) The substance of the proposed change;

(b) A statement of the time, place, and nature of the proceedings; and

(c) A statement of the time by which interested parties must submit the notices of appearance required by §70.10.

§70.6 Analysis for public use.

At the time of publication of the notice referred to in §§70.4 and 70.5, the Commission shall make available to the public an analysis showing:

(a) The basis and justification for the proposed change, which, in the case of a change in the rates or tolls, shall indicate the conformity of the existing and proposed rates of tolls with the requirements of section 1602 of the Panama Canal Act of 1979; and

(b) The Commission's full consideration of the following factors:

(1) The costs of operating and maintaining the Panama Canal;

(2) The competitive position of the use of the Canal in relation to other means of transportation;

(3) The interests of the United States and the Republic of Panama in maintaining their domestic fleets;

(4) The impact of such a change in rates of tolls on the various geographical areas of each of the two countries; and

(5) The interests of both countries in maximizing their international commerce.

§70.7 Data filed by interested parties.

After notice required by §70.4, interested parties shall be given the opportunity to participate in the change in the rules of measurement or rates of tolls through submission of written data, views, or arguments, which shall be filed with the Secretary of the Commission within the time prescribed in the notice. Copies of such data or other materials shall be available for distribution to other interested parties on payment of the cost prescribed by the Commission.

§70.8 Hearing.

Interested parties shall have the opportunity to participate in a hearing which shall be held not less than 30 days after the date of publication of the notice required by §70.4. Such hearing shall be held at the time and place prescribed in the notice. In fixing the time and place for the hearing, due regard shall be had for the convenience of the parties and their representatives. Parties appearing at such hearing may present data supplementary to any material already submitted by them, or any oral argument or statement concerning the rules of measurement or tolls, as appropriate. Upon presentation of such supplementary data, arguments, or statements, the panel may request further information or clarification.

§70.9 Hearing panel.

One or more members of the Board shall be designated by the Chairman of the Board as a panel to conduct the hearing. If two or more members are so designated, one shall be appointed by the Chairman of the Board to act as Chairman of the Panel.

§ 70.10 Notice of appearance; witnesses.

Interested parties may appear at the hearing in person or by or with counsel or other qualified representative if notice of that appearance, including the names and addresses of the parties appearing, is furnished in writing to the Commission's Secretary within the time prescribed by the notice of the hearing. Such notice of appearance shall also state the names and addresses of any witnesses to appear, the capacity in which they will appear, the place at which they desire to be heard if hearings are scheduled to be held at more than one place, and the approximate time requested for the presentation of each witness.

§ 70.11 Conduct of hearing.

The panel shall conduct the hearing in an impartial manner. Subject to applicable statutes and rules, the panel may:

(a) Regulate the course of the hearing;

(b) Administer or require the administration of oaths or affirmations;

(c) Hold conferences for the settlement or simplification of the issues by consent of the parties;

(d) Dispose of procedural requests or similar matters;

(e) Exclude irrelevant, immaterial or unduly repetitious material offered by the parties or witnesses; and

(f) Exclude any party or witness for contumacious or other conduct which interferes with the proceedings.

§ 70.12 Post-hearing revision.

After consideration of the panel's findings and other relevant matters, the Commission may revise the proposed rules of measurement or rates of tolls, as the case may be. However, in the case of rates of tolls, if such revision proposes rates greater than those originally proposed, the proceedings set out above (making an analysis available to the public, minimum of 30 days notice, submission of data, hearing, etc.) shall be repeated. This requirement shall apply to any subsequent revision which proposes rates higher than those in the preceding proposal.

§ 70.13 Transcript.

A transcript of the proceedings at the hearing(s) shall be made available to any party on request and payment of the costs prescribed by the Commission.

§ 70.14 Effective date.

Rules of measurement or rates of tolls prescribed by the Commission, pursuant to Pub. L. 96–70 and these regulations, shall take effect on a date prescribed by the Commission which is not less than 30 days after the Commission publishes such rules or rates in the FEDERAL REGISTER.

[47 FR 8177, Feb. 25, 1982. Redesignated and amended at 61 FR 16719, Apr. 17, 1996]

SUBCHAPTER C—SHIPPING AND NAVIGATION

PART 101—ARRIVING AND DEPARTING VESSELS: VARIOUS COMMUNICATION, DOCUMENTATION, SANITATION AND ADMEASUREMENT REQUIREMENTS

Sec.
101.1 Signal stations at the Canal entrances.
101.2 Boarding of arriving vessels.
101.3 Definition and functions of the boarding officer.
101.4 Measurement of vessel making maiden transit.
101.8 Vessel anchorage areas.
101.9 Papers required by boarding officer.
101.10 Same; list.
101.13 Entry and departure of vessels.
101.14 Panama Canal waters; definition.

AUTHORITY: 22 U.S.C. 3811, E.O. 12215, 45 FR 36043, and 44 U.S.C. 3501.

SOURCE: 46 FR 63175, Dec. 30, 1981, unless otherwise noted.

§101.1 Signal stations at the Canal entrances.

The Panama Canal Commission maintains established signal stations at both the Atlantic and Pacific entrances of the Canal. A vessel arriving at the Canal must communicate with the signal station which is located at the entrance of the Canal at which that vessel arrives. Vessels required to be equipped with a radiotelephone pursuant to Part 123 of this subchapter must, upon arrival, communicate with the appropriate signal station on Channel 12, 156.000 MHz. All other vessels may use International Code and flashing light. Such stations are also utilized to assist in control of traffic within Panama Canal waters.

CROSS REFERENCE: See Part 123 for provisions respecting radio communication by vessels prior to arrival and while they are in Panama Canal waters.

§101.2 Boarding of arriving vessels.

(a) Unless otherwise directed, all arriving vessels will anchor in designated anchorages to await instructions. No person other than boarding officials of the Panama Canal Commission and the Republic of Panama may go on board or leave any vessel until such vessel has been entered by the Commission and where applicable, by the Republic of Panama.

(b) Arriving vessels that are subject to inspection for compliance with Panama Canal shipping and navigation regulations will normally be boarded upon arrival inside the breakwater at the Atlantic entrance of the Canal or off the seaward end of the dredged, marked channel at the Pacific entrance. When such vessels are not boarded immediately upon arrival, they shall anchor in a designated anchorage area and await the boarding official. Weather and sea conditions permitting, the boarding of vessels may take place outside of these areas. Boarding will be performed by a Commission boarding official in accordance with the procedures established under this part.

(c) Admeasurement functions shall be performed on arriving vessels either while at anchor or during transit.

[46 FR 63175, Dec. 30, 1981, as amended at 56 FR 55632, Oct. 29, 1991]

§101.3 Definition and functions of the boarding officer.

(a) Boarding officer means any official or employee of the Panama Canal Commission who is duly assigned the functions of a boarding officer, including admeasurement and sanitation.

(b) The Commission boarding officer shall perform the functions of admeasurer for the purpose of determining Panama Canal tolls and shall make inspection for the purpose of insuring compliance with Panama Canal shipping, navigation and sanitation regulations.

§101.4 Measurement of vessel making maiden transit.

A vessel that arrives after 8 p.m. and is to make her maiden transit will normally be admeasured on the following day.

[31 FR 12287, Sept. 16, 1966]

§ 101.8 Vessel anchorage areas.

The following areas are designated as authorized anchorages within Canal waters:

(a) *Atlantic entrance*—(1) *Merchant-vessel anchorage.* An area to the west of the Canal channel bounded as follows: Starting at a point ''A'', located in position 9°21′25″ N., 79°55′31″ W., and marked by lighted buoy No. 2, thence 900 yards 270° true to a point ''B'' located in position 9°21′25″ N., 79°55′58″ W., thence to lighted buoy ''I'', thence to lighted buoy ''H'', thence due north to a point ''C'' located in position 9°22′07″ N., 79°56′41″ W., thence 2,800 yards 59° true to a point ''D'' located in position 9°22′50″ N., 79°55′29″ W., and thence to the starting point. The line extending due west from the Cristobal Mole through lighted beacon No. 1 and lighted buoy No. 2 (9°21′25″ North) marks the southern limit of the anchorage area. Except as provided by § 105.3, no vessel shall pass this line without having been passed by the boarding officer and without having a Canal pilot on board.

(2) *Outside explosive anchorage.* An area bounded by a line from Point A at position 9°23′53″ N., 79°56′29″ W., thence to Point B at position 9°24′40″ N., 79°56′29″ W., thence to Point C at position 9°24′40″ N., 79°57′00″ W., thence to Point D at position 9°23′53″ N., 79°57′00″ W., thence to Point A.

(3) *Inside explosive anchorage.* The area included in a rectangle one thousand yards wide immediately south of the West breakwater, the rectangle extending 2000 yards along the west breakwater from a point on the west breakwater one thousand yards from the west breakwater light.

(4) *Small-craft anchorage.* An area to the east of the Canal channel bounded as follows: Starting at buoy ''A'', a flashing amber buoy located in position 9°20′43″ N., 79′55′10″ W., thence 1075 yards 066° true, through fixed amber lighted buoy ''B'' to fixed amber lighted buoy ''C'', thence 375 yards 143° true, thence 1760 yards 233° true to the east prism of the Canal channel, thence due north 410 yards to flashing special anchorage buoy ''3'', thence 525 yards 023° true to the starting point at buoy ''A''.

(b) *Gatun Lake anchorage.* An area immediately east of the Canal channel line, bounded by a line extending from the south end of the east wing-wall of Gatun Locks, thence 450 yards 120° true, thence 676 yards 146° true to flashing special anchorage buoy ''A'', thence 1,415 yards 078° true to flashing special anchorage buoy ''1'', thence 1,199 yards 155° true to flashing special anchorage buoy ''3'', thence 2,314 yards 225° true through special anchorage buoy ''5'' to special anchorage buoy ''7'', thence 901 yards 220° true to special anchorage buoy ''9'', thence 952 yards 205° true to the Canal channel line at flashing buoy ''11'', the channel prism line being the westerly boundary line of the anchorage area.

(c) *Pacific entrance*—(1) *Merchant-vessel anchorage.* An area bounded as follows: Beginning at a point in position 8°51′50″ N., 79°30′00″ W., marked by a lighted, whistle buoy which is painted with alternating black and white vertical stripes and which shows short-long flashing white light every 8 seconds (i.e., light 0.4 second, eclipse 0.4 second, light 1.6 seconds, eclipse 5.6 seconds), thence due east to longitude 79°28′00″ W., thence due north to 8°54′31″ N., thence due west toward Flamenco Island Light to a point 8°54′31″ N., 79°30′46″ W., thence southwestward touching the northwest corner of San Jose Rock to position 8°53′27″ N., 79°31′23″ W., marked by canal-entrance lighted buoy No. 2, thence southeastward to the point of beginning.

(2) *Explosive anchorage.* An area south of Naos Island bounded on the east by a line drawn south (true) from canal-entrance lighted buoy No. 1; on the south by a line drawn east (true) from Tortolita Island, and in the north and west by the curve of 30 foot depth.

(d) If there are any discrepancies between the designated anchorage areas as described in this section and the anchorage areas described in paragraph 4 of Annex A of the Agreement in Implementation of Article III of the Panama Canal Treaty of 1977 and the attachments thereto, the description in the treaty documents shall govern.

[50 FR 19678, May 10, 1985]

§ 101.9 Papers required by boarding officer.

On arrival, there shall be ready for immediate inspection or delivery, as the case may be, to the boarding officer

the required number of copies of papers concerning tonnage of vessel, cargo, and such other matters upon which information is necessary, as are prescribed by § 101.10. The required manifests, lists and statements shall be sworn to by the Master or agent of the vessel. Vessels will not be permitted to transit until properly cleared by the boarding officer. Failure to present the required papers to boarding officers could result in loss of the vessel's relative position in the movement schedule and delay in granting the necessary permission to depart.

(Approved by the Office of Management and Budget under control number 3207–0001)

[46 FR 63175, Dec. 30, 1981, as amended at 50 FR 26991, July 1, 1985]

§ 101.10 Same; list.

(a) *Documents for Commission Boarding Officer.* All documents listed below shall be ready for immediate delivery to the boarding officer when he boards the vessel upon each arrival of the vessel at the Canal.

DOCUMENTS REQUIRED

(1) Ship's Information and Quarantine Declaration (Panama Canal Form 4398)—1 copy.

(2) Cargo Declaration (Panama Canal Form 4363)—1 copy.[1]

(3) Crew List (Panama Canal Form 1509)—1 Copy

(4) Passenger List (Panama Canal Form 20)—1 copy.

(5) Dangerous Cargo Manifest—1 copy.[2]

(6) Loading Plan—1 copy.[3]

(7) Panama Canal Tonnage Certificate—1 copy.[1]

(8) Ship's plans (general arrangement, engine room, capacity, mid-ship, etc.)—1 copy.[1]

(b) *Documents for examination only.* The following documents shall be available for inspection by the Commission boarding officer:

(1) Ship's log,

(2) All ship's documents pertaining to cargo, classification, construction, load lines, equipment, safety, sanitation, and tonnage,

(3) SOLAS certificate, for ships carrying dangerous cargo in bulk,

(4) An International Oil Pollution certificate, for ships carrying dangerous cargo in bulk, and

(5) Certificates showing compliance with the International Convention on Standards of Training, Certification and Watchkeeping for Seafarers, 1978 (STCW), if the nation of registry has implemented the convention standards. If the nation of registry has not implemented the STCW convention, then certifications issued or accepted by the registry nation attesting to the qualifications of officers and crew will be accepted by the agency. Certification requirements will apply only to officers and crew responsible for the safe handling of the vessel.

(c) *Crew list.* For the purposes of additional identification of crew members, all copies of the crew list required by this section shall include for each seaman the serial number of his certificate of identification, continuous discharge book, passport or other satisfactory identifying documentation. In addition, the given name and middle initial, as well as the family name, shall be shown for all seamen.

(d) *Passenger list.* The passenger list required by this section shall be in accurate and legible form and shall be delivered to the boarding officer. The list shall show passengers in alphabetical order.

(e) *Dangerous cargo manifest.* The dangerous cargo manifest for vessels carrying packaged dangerous goods, as defined in § 113.2(m) of this title, shall show the correct technical name, United Nations number, International Maritime Organization class and division, storage location, and quantity for each packaged dangerous good carried as cargo.

(f) *Loading plan.* The loading plan for vessels carrying dangerous cargo in bulk, as defined in § 113.2(f) of this title, shall show the location of cargo tanks or holds and the correct technical name, United Nations number, International Maritime Organization class and division, and quantity of dangerous

[1] Required only if vessel transits Canal.

[2] Required only if vessel is carrying packaged, dangerous goods.

[3] Required only if vessel is carrying dangerous cargo in bulk.

cargo carried in each cargo tank or hold.

(Approved by the Office of Management and Budget under control number 3207–0001)

[50 FR 19678, May 10, 1985, as amended at 54 FR 37326, Sept. 8, 1989]

§ 101.13 Entry and departure of vessels.

(a) An arriving vessel shall be entered at either the Pacific or Atlantic entrance. A vessel is entered by the Canal Commission authorities upon the report of the boarding officer and it is not necessary for the Master to come ashore for that purpose. At the discretion of the Marine Director, a vessel may be denied entry for failure to comply with Panama Canal regulations. In certain cases vessels may be provisionally entered. When provisional entry is granted, vessels may remain in Canal waters only under the conditions set forth in the provisional entry. Permission to enter port waters will be given by the Republic of Panama.

(b) Any vessel that has entered or has provisionally entered the Canal shall, prior to its departure therefrom, obtain permission from the Marine Director or designee. Permission to depart shall be issued only after that official has been satisfied that:

(1) All documents and statistical data required for entry or provisional entry by the Canal authorities respecting the vessel and its cargo have been furnished; and

(2) Tolls and other charges for services or supplies furnished by the Panama Canal Commission have been paid or the payment secured.

[46 FR 63175, Dec. 30, 1981, as amended at 55 FR 11908, Mar. 30, 1990]

§ 101.14 Panama Canal waters; definition.

As used in this Subchapter, the term ''Panama Canal waters'' or ''Canal waters'' refers to all waters lying within the Canal operating area described in Annex A of the Agreement in Implementation of Article III of the Panama Canal Treaty of 1977 between the United States of America and the Republic of Panama and depicted in attachments thereto.

PART 103—GENERAL PROVISIONS GOVERNING VESSELS

Sec.

103.1 Regulations to be kept aboard.
103.2 Denial of passage to dangerous vessel.
103.3 Discovery of defect in vessel during transit or while under way.
103.4 Load and trim.
103.5 Deck load.
103.6 Size and draft limitations of vessels.
103.7 Authority to deny transit.
103.10 Vessels required to be equipped with certain indicators.
103.11 Vessels without mechanical signal system to engine room subject to delay in transiting.
103.12 Discharge of firearms.
103.13 Firing of salutes.
103.14 Colors and house flags.
103.15 Boarding vessels at anchor or underway.
103.16 Meals to be furnished by vessel in certain cases.
103.17 Boat for handling lines.
103.18 Pilot ladders, hoists and side ports.
103.19 Requirement for pilot shelter platforms.
103.20 Disabling of engines.
103.21 Precautions against emission of sparks, smoke or noxious gases.
103.25 Fishing or placing of nets or other obstructions prohibited.
103.26 Obstructions not to be placed across channels or anchorages.
103.27 Clear view forward from the bridge and steering light requirement for certain vessels.
103.28 Towing of certain vessels required.
103.29 Anchoring in Panama Canal waters.
103.30 Requirements for all dead tows.
103.32 Engine orders to be recorded.
103.33 Navigation in Gaillard Cut.
103.34 Same; Control by Canal Operations Captain.
103.39 Arrow signals; locks.
103.40 Transit schedules; pennants.
103.41 Ships to display schedule number.
103.42 Maneuvering characteristics; data required.

AUTHORITY: 22 U.S.C. 3791, E.O. 12215, 45 FR 36043, 3 CFR, 1981 Comp., p. 257.

SOURCE: 46 FR 63176, Dec. 30, 1981, unless otherwise noted.

§ 103.1 Regulations to be kept aboard.

All vessels shall keep aboard not less than one copy of the current regulations contained in Subchapters A, B, and C of this chapter. Vessels arriving for the first time without such regulations aboard shall obtain them through

their ships' agent as soon as practicable after arrival.

(Approved by the Office of Management and Budget under control number 3207–0001)

[31 FR 12289, Sept. 16, 1966, as amended at 54 FR 29336, July 12, 1989]

§103.2 Denial of passage to dangerous vessel.

The Canal authorities may deny any vessel passage through the Canal when the character or condition of the cargo, hull, or machinery is such as to endanger the structures pertaining to the Canal, or which might render the vessel liable to obstruct the Canal, or whose draft, at any part of the vessel, exceeds the maximum allowable draft in the Canal as designated from time to time by the Canal authorities.

[31 FR 12289, Sept. 16, 1966]

§103.3 Discovery of defect in vessel during transit or while under way.

Upon the discovery during transit of the Canal, or at any time while under way, of any defect in a vessel of such serious nature that it might interfere with further passage or with her safe navigation, the vessel shall stop and, if practicable, be anchored or moored at the first available place. A full report shall be made immediately to the Canal Operations Captain or his designee by radio or by the best means available.

[46 FR 63176, Dec. 30, 1981; 47 FR 54072, Dec. 1, 1982, as amended at 55 FR 11908, Mar. 30, 1990]

§103.4 Load and trim.

(a) A vessel shall not be permitted to transit the Canal if she:

(1) Has a list of more than 10 degrees;

(2) Is so tender or otherwise so loaded as to dangerously affect her stability or maneuverability; or

(3) Is so trimmed as to dangerously affect her maneuverability.

(b) A vessel having a list of between 3 degrees and 10 degrees, or which is so loaded or so trimmed as to adversely affect her manuverability, may be permitted to transit at the discretion of the Canal Operations Captain or his designee. If such vessel is allowed to transit, however, it may do so only at its own risk and, to the extent and in the proportion that such failure to meet the requirements of this section proximately causes or contributes to a casualty and resulting damages, the Master of such vessel on behalf of said vessel, her owners, operators, or any other persons having any interest in her, and for himself, will be considered to have released the Panama Canal Commission and the United States from, and to have indemnified them against, any loss, damage, or liability incurred by the Commission, or the United States under or in respect to:

(1) Sections 1411 through 1416, inclusive, of Pub. L. 96–70, 93 Stat. 485–87.

(2) Property of the Panama Canal Commission or the United States; and

(3) Panama Canal Commission employees under the Federal Employees' Compensation Act, 5 U.S.C. 8101, *et seq.*, or any other employee compensation system.

The Master of the vessel that fails to meet the requirements of this section may be required to execute, in the presence of a Commission official, a form undertaking to release the Panama Canal Commission and the United States from liability in case of an accident and to indemnify the Commission and the United States for any damages sustained. The failure of the Master of a vessel to sign such a form, however, will not relieve the vessel, her owners, or any other person having an interest in her from liability incurred as a result of the vessel's failure to meet the requirements of this section.

(c) Nothing shall be done, or permitted to be done, by the Master or any member of the crew, which would alter the trim or draft of a vessel while it is transiting the Canal, without the prior, express approval of the pilot.

[31 FR 12289, Sept. 16, 1966, as amended at 46 FR 63177, Dec. 30, 1981; 55 FR 11908, Mar. 30, 1990]

CROSS REFERENCE: Federal Employees' Compensation Act, see 5 U.S.C. 8102 *et seq.*

§103.5 Deck load.

(a) A vessel carrying a deck load shall have it so stowed as to be sufficiently clear to provide safe working space around all chocks, bitts, and other gear used in transiting and so arranged as to not obstruct any direct lead from chocks to bitts.

(b) Vessels may transit with deck cargo protruding over one side not to exceed 15.0 feet if the maximum beam, including protrusions, does not exceed 85.0 feet. Pursuant to section 1411 of Pub. L. 96–70, 93 Stat. 485, however, the Commission may not consider any claim for damages on account of any injury to such cargo which might be sustained while the vessel is passing through the locks of the Canal.

§ 103.6 Size and draft limitations of vessels.

(a) *Definitions as used in this section:*

(1) *TFW* means Tropical Fresh Water of Gatun Lake, density .9954 gms/cc at 85°F. (Transition to fresh water frequently alters the trim of large vessels 3″ to 4″ by the head.)

(2) *Published TFW maximum draft* means the deepest point of immersion in Gatun Lake waters as promulgated by the Marine Director, taking into account the water level of Gatun Lake and other limitations deemed necessary because of restrictions in the Canal.

(3) *Maximum authorized transit draft* means the deepest point of immersion in TFW of a particular vessel authorized at anytime, Gatun Lake level and Canal restrictions permitting.

(4) *Commercial vessel* means a self-propelled vessel, other than a naval, military or other public vessel.

(5) *Integrated tug-barge combination* means a barge that is specifically configured to receive a tugboat and with the tug, becomes, in effect, a single self-propelled unit.

(6) *Non-self-propelled vessel* means a vessel which either does not have an installed means of propulsion, or has an installed means of propulsion which is not functioning during transit.

(7) *Barge* means a flat-bottomed vessel of full body and heavy construction without installed means of propulsion.

(b) Maximum authorized transit draft of vessels with draft in excess of 35 feet, six inches.

(1) Prior to the initial transit of a vessel whose transit draft will exceed 35 feet, six inches, owners, operators, or agents must supply in full the information required in paragraph (b)(2) of this section and request the maximum authorized transit draft for the vessel (deepest point of immersion TFW) from the Canal Operations Captain or his designee, no later than two weeks prior to loading of the vessel. This request will be returned with the approved maximum authorized transit draft stamped thereon.

(2) The information required by paragraph (b)(1) of this section shall be submitted in the following format:

INFORMATION NEEDED PRIOR TO INITIAL TRANSIT THROUGH THE PANAMA CANAL

Bilge Information

Name of vessel ———————— Date ———
Authorized Tropical Fresh Water Load Line ———
Admeasurer ———— Certified as Correct ———
[Master-Owners—Agents]
(1) ''A''—Half breadth of vessel to the outside of shell ————
(2) ''R''—Radius of turn of bilge (Feet & Inches) ————
(3) ''DR''—Dead rise at side of vessel (Inches) ————

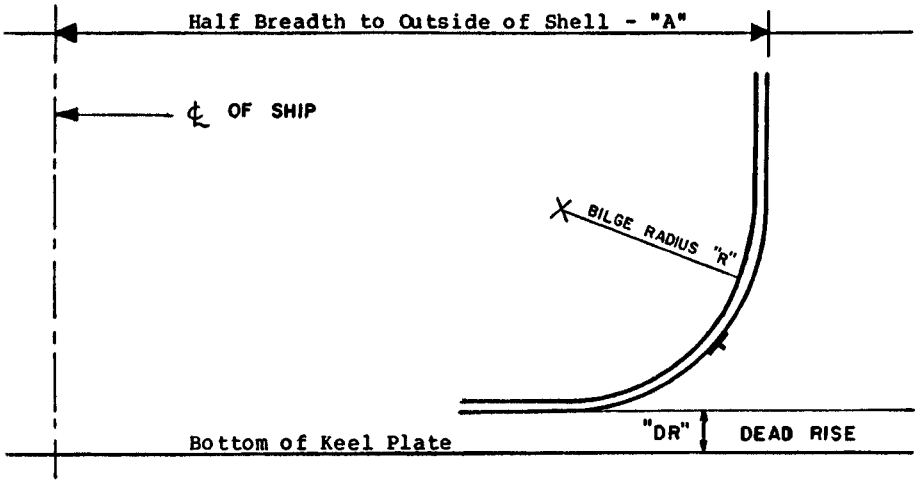

NOTE: On an off-center lockage with the vessel touching the lock wall, the turn of the bilge will clear the lock-wall batters at the most critical point as shown in the Table of Limiting Drafts, paragraph (d)(3) of this section.

(c) *Draft during initial transit.* The initial transit is permitted at the maximum authorized transit draft. After the initial transit, unless the vessel's agent or owner is notified of any restrictions imposed by Canal authorities, this maximum authorized transit draft will remain in effect.

(d) *Minimum transit drafts, measured in salt water*—(1) All vessels transiting the Canal must have sufficient ballast to permit safe handling during transit. The following are minimum salt water drafts (TSW) for ships anticipating transit:

Length	Minimum drafts
Up to 425′	Trimmed so pilot can see the ranges over the forecastle from center of navigation bridge.
Over 425′ but not more than 475.0′.	8′ forward, 14′ aft, TSW.
Over 475′ but not more than 525.0′.	18′ forward, 20′ aft, TSW.
Over 525′ but not more than 580.0′.	20′ forward, 22′ aft, TSW.
Over 580′ but not more than 625.0′.	22′ forward, 24′ aft, TSW.
Over 625′	24′ forward, 26′ aft, TSW.

(2) The vessel's drag must not adversely affect maneuverability.

(3) The following table provides the limiting drafts due to bilge radius:

TABLE OF LIMITING DRAFTS DUE TO BILGE RADIUS CONTACTING CHAMBER BATTERS

[Allows for 6-inch thick rubber fenders on lock walls at batter locations]

	Radius of turn of bilge (feet)				
	1′	2′	3′	4′	5′
0″	35′8″	36′6″	37′4″	38′2″	39′0″
1″	35′9″	35′7″	37′5″	38′3″	39′1″
2″	35′10″	36′8″	37′6″	38′4″	39′2″
3″	35′10″	36′8″	37′6″	38′5″	39′3″
4″	35′11″	36′9″	37′7″	38′5″	39′3″
5″	36′0″	36′10″	37′8″	38′6″	39′4″
6″	36′1″	36′11″	37′9″	38′7″	39′5″
7″	36′2″	37′0″	37′10″	38′8″	39′6″
8″	36′3″	37′1″	37′11″	38′10″	
9″	36′3″	37′1″	38′0″	38′10″	
10″ ...	36′4″	37′2″	38′0″	38′10″	
11″ ...	36′5″	37′3″	38′1″	38′11″	

EXAMPLE: To find draft of ship having a radius-of-turn-of-bilge of 4′4″ read across top of table to column headed 4′ thence down column opposite 4 inches—Read 38′5″.

NOTE: *Dead Rise* not included in above tabulations and must be added to above readings.

(4) A vessel whose ballast draft does not meet the minimum draft requirements established by this section may be accepted for transit on a regular basis, provided the vessel operator requests permission and submits the following information to the Marine Bureau of the Panama Canal Commission: (i) Principal dimensions of the vessel;

(ii) deepest attainable minimum draft (fore and aft); (iii) limitations on visibility fore and aft from the navigation bridge; (iv) necessary excerpts from the vessel's plans, drawings and maneuvering data that relate to the vessel's suitability for transit.

(5) The vessel will be inspected by the Canal authorities upon its first visit after such a request is made. If the vessel is acceptable for transit at less than the prescribed minimum draft, the operator will be notified that transit on a regular basis is authorized provided the vessel meets the special minimum draft that is specified in the notice.

(6) If the vessel is found not to be acceptable for transit on a regular basis, a single transit may be authorized, at the discretion of the Canal authorities, subject to the imposition of any special conditions that may be required for reasons of safety or continuance of regular Canal operations.

(e) Maximum length. (1) The maximum length overall, including bulbous bow, for a commercial vessel acceptable for regular transit is 950.0 feet, except passenger and container ships, which may be 965.0 feet in overall length. In order to insure a safe passage, vessels exceeding 900.0 feet in overall length, which are transiting the Canal for the first time or are newly-modified or newly-constructed vessels, are subject to denial of passage pursuant to § 103.2 and to the requirement of prior Commission review and approval of vessel plans in accordance with Canal regulations.

(2) The maximum length for integrated tug-barge combination acceptable for regular transit is 900.0 feet overall, including the tug. A tug-barge combination must transit together as one unit, with the tug supplying the propelling power.

(3) The maximum aggregate overall length for non-self-propelled vessels acceptable for transit is 850.0 feet, including accompanying tugs. Accompanying tugs must lock through with the non-self-propelled vessel.

(f) *Maximum beam*—(1) The maximum extreme beam for a commercial vessel and the integrated tug-barge combination acceptable for regular transit is 106.0 feet.

(2) In the discretion of the Canal Operations Captain or his designee, commercial vessels, including integrated tug-barge combinations, having an extreme beam of between 106.0 and 107.0 feet may be permitted to transit on a one-time basis only if the deepest point of immersion does not exceed 37.0 feet TFW.

(3) The maximum extreme beam for non-self-propelled vessels (other than integrated tug-barge combinations) acceptable for transit is 100.0 feet.

(g) *Previous approvals and one-time transits.* Vessels approved for regular transit prior to December 20, 1976 whose maximum length or beam slightly exceed the limits set forth in paragraphs (e) and (f) may continue to transit on a regular basis. After that date, approval will not be given for transit of other commercial vessels whose extreme beam exceeds 106.0 feet by any amount, except for vessels transiting on a one-time delivery basis.

(h) *Release from liability.* If a vessel having a beam in excess of 106.0 feet is permitted to transit on a one-time basis, such vessel may do so only at its own risk and, to the extent and in proportion that such failure to meet the requirements of this section proximately causes or contributes to a casualty and resulting damages, the Master of such vessel, on behalf of said vessel, her owners, operators, or any other person having an interest in her, and for himself, will be considerd to have released the Panama Canal Commission and the United States from, and to have indemnified them against, any loss, damage or liability incurred by the Panama Canal Commission or the United States under, or in respect to:

(1) Sections 1411 through 1416, inclusive, of Pub. L. 96–70, 93 Stat. 485–87;

(2) Property of the Panama Canal Commission or the United States; and

(3) Panama Canal Commission employees under the Federal Employees' Compensation Act 5 U.S.C. 8101, *et seq.*, or any other employee compensation system.

The Master of the vessel that fails to meet the requirements of this section may be required to execute, in the presence of a Commission official, a form undertaking to release the Panama Canal Commission and the United

States from liability in case of an accident and to indemnify the Commission and the United States for any damages sustained. The failure of the Master of a vessel to sign such a form, however, will not relieve the vessel, her owners, or any other person having an interest in her from liability incurred as a result of the vessel's failure to meet the requirements of this section.

(i) *Denial of transit.* A vessel shall not be permitted to transit the Canal under the following circumstances:

(1) When the vessel's maximum point of immersion exceeds its maximum authorized draft;

(2) When the vessel's maximum point of immersion exceeds the published FW maximum draft then in effect;

(3) When the length overall, including bulbous bow, exceeds that stated in paragraph (e) of this section, unless the vessel was approved for regular transit prior to March 16, 1981; or

(4) When the extreme beam exceeds that stated in paragraph (f) of this section by any amount, unless the vessel was approved for regular transit prior to March 10, 1981.

(j) *General.* (1) Vessels of 100.0 feet beam and over whose list, trim or handling characteristics are such as to endanger themselves, Panama Canal appurtenances or a third party, may have such further limitations placed on them as Canal authorities deem necessary to insure reasonable safety.

(2) The draft of non-self-propelled barges of 550.0 feet or more in length may be limited when, in the opinion of Canal authorities, such a limit is necessary to insure reasonable safety.

(3) Non-self-propelled vessels, other than integrated tug-barge combinations, will be accepted only on an individual basis; advance permission for initial transit as a non-self-propelled vessel is required. Displacement of these vessels is limited to 35,000 tons and the draft requirements of paragraph (d) of this section are applicable. Riding crews must be provided in sufficient numbers, as required by the Canal Operations Captain, to safely handle towboat lines and boarding ladders, and to assist in mooring.

(4) The numerous constraints affecting the transit schedules of vessels and tows make it important that information provided in advance of the initial transit of a vessel include a capacity plan, general arrangement plans, engine room plans, and whenever possible, a photostatic copy of national register, load line certificate and Panama Canal tonnage certificate. This advance information will minimize the time spent aboard the vessel by Panama Canal officials before commencement of the initial transit.

(Approved by the Office of Management and Budget under control number 3207–0001)

[46 FR 63176, Dec. 30, 1981; 47 FR 54072, Dec. 1, 1982, as amended at 50 FR 26991, July 1, 1985; 53 FR 12517, Apr. 15, 1988; 55 FR 11908, Mar. 30, 1990]

§103.7 Authority to deny transit.

A vessel's transit may be denied until, in the opinion of the Canal authorities, its tenderness, trim, list, draft, cargo, hull, machinery, and equipment have been put into such condition as will make the vessel safe for her passage through the Canal. No claim shall be allowed or considered because of any such delay.

[54 FR 43962, Oct. 30, 1989]

§103.10 Vessels required to be equipped with certain indicators.

(a) All vessels in excess of 150 feet in length shall be equipped with properly operating rudder-angle and engine-revolution indicators in the wheelhouse so located and illuminated as to be readily visible to a pilot.

(b) All vessels with beams in excess of 80 feet shall be equipped with properly operating rudder-angle and engine-revolution indicators in the wheelhouse and on each bridge wing so located and illuminated as to be readily visible to a pilot.

(c) All vessels in excess of 150 feet in length which are equipped with variable pitch propellers shall have properly operating pitch indicators in the wheelhouse so located and illuminated as to be readily visible to a pilot.

(d) All vessels with beams in excess of 80 feet which are equipped with variable pitch propellers shall have properly operating pitch indicators in the wheelhouse and on each bridge wing so located and illuminated as to be readily visible to a pilot.

(e) Any vessel which fails to meet the requirements of this section may be denied transit. If the Canal authorities decide that a vessel can be handled without undue danger to equipment or to personnel, notwithstanding her failure to comply with other requirements of this section, and permit her to transit, such vessel may do so only at its own risk and, to the extent and in the proportion that such failure to meet the requirements of this section proximately causes or contributes to a casualty and resulting damages, the Master of such vessel, on behalf of said vessel, her owners, operators or any other persons having any interest in her, and for himself, will be considered to have released the Panama Canal Commission and the United States from, and to have indemnified them against, any loss, damage or liability incurred by Panama Canal Commission or the United States under, or in respect to:

(1) Sections 1411 through 1416, inclusive, of Pub. L. 96–70, 93 Stat. 485–87;

(2) Property of the Panama Canal Commission or the United States; and

(3) Panama Canal Commission employees under the Federal Employees' Compensation Act, 5 U.S.C. 8101, *et seq.*, or any other employee compensation system.

The Master of the vessel that fails to meet the requirements of this section may be required to execute, in the presence of a Commission official, a form undertaking to release the Panama Canal Commission and the United States from liability in case of an accident and to indemnify the Commission and the United States for damages sustained. The failure of the Master of a vessel to sign such a form, however, will not relieve the vessel, her owners, or any other person having an interest in her from liability incurred as a result of vessel's failure to meet the requirements of this section.

[40 FR 8348, Feb. 27, 1975, as amended at 41 FR 21775, May 28, 1976; 46 FR 63179, Dec. 30, 1981]

§ 103.11 Vessels without mechanical signal system to engine room subject to delay in transiting.

(a) A vessel that is not equipped with a properly operating mechanical system of signals between the pilot house and the engine room, as recommended under paragraph (b) of this section, is subject to delay in transiting to the extent the Canal authorities deem necessary or appropriate in order to minimize, in the light of the type and volume of Canal traffic and of other factors relating to the safety of Canal operations, the increased hazards of navigation resulting from failure of the vessel to be so equipped.

(b) It is recommended that every vessel have a mechanical system of signals between the pilot house and the engine room. Any such system should return the engine order to the pilot house. If the signal system is by bells the vessel should have a tube, of proper size, so arranged as to return the sound of the bell signals to the pilot house, and should also be provided with a speaking tube or other device for the purpose of conversation between the pilot house and engine room. If the signal system is by engine room telegraph it should be capable of repeating the order back to the pilot house.

[31 FR 12289, Sept. 16, 1966]

§ 103.12 Discharge of firearms.

No firearms of any kind may be discharged from vessels while in Canal waters, except that authorized salutes by vessels of war will be permitted by prior arrangement with Canal authorities.

§ 103.13 Firing of salutes.

Vessels of war may not fire salutes while at a Commission dock, in the locks, or in Gaillard Cut.

§ 103.14 Colors and house flags.

During daylight, vessels in Canal waters shall display their colors and house flags.

§ 103.15 Boarding vessels at anchor or underway.

Except for members of the Canal boarding party, pilots, Republic of Panama boarding officials, and agents, in the performance of their official duties, and such other persons as may be authorized by Canal authorities, no person, with or without the consent of the Master, may board a vessel at anchor or underway in the Canal waters.

§103.16 Meals to be furnished by vessel in certain cases.

Vessels shall furnish meals to Panama Canal pilots without charge during the ship's regular meal hours and shall furnish a meal to the pilot between 2200 hours and 0400 hours if the vessel is transiting the Canal during such hours. In addition, vessels shall provide meals without charge during the ship's regular meal hours to any other Panama Canal Commission personnel, other than linehandlers, whose assignment will require them to be aboard the vessel for four or more hours. If a vessel is unable to furnish such meals, they may be furnished by the Panama Canal Commission at the expense of the vessel.

§103.17 Boat for handling lines.

A vessel shall keep at least one boat ready for lowering, for the purpose of handling lines.

[31 FR 12289, Sept. 16, 1966]

§103.18 Pilot ladders, hoists and side ports.

(a) A vessel shall, weather permitting, have both an accommodation ladder and a pilot ladder rigged and ready for use upon arrival in Canal waters.

(b) The pilot ladder shall be constructed and rigged in accordance with Regulation 17, Chapter V, International Convention for Safety of Life at Sea, 1974, TIAS 9700, except that:

(c) When the distance from the water line to the point of access of the vessel exceeds nine meters or 30 feet, a combination pilot ladder and short brow accommodation ladder must be provided for boarding purposes.

(d) A mechanical pilot hoist may be used for boarding officials and pilots only at their discretion, and provided that the design and construction of the hoist and ancillary equipment are in accordance with Regulation 17, Chapter V, International Convention for Safety of Life at Sea, 1974.

(e) When a mechanical pilot hoist is used, a ring buoy fitted with a lifeline and self-igniting light shall be available and ready for immediate use. The pilot ladder required by §103.18(a) shall be in close proximity to the pilot hoist, ready for immediate use but lashed up so as not to interfere with the pilot hoist.

(f) When the side ports are used for boarding, the minimum vertical distance between the waterline and the bottom of the side port at any draft shall be six feet.

§103.19 Requirement for pilot shelter platforms.

(a) Any vessel that, in accordance with Panama Canal operation standards, is required to have three or more pilots aboard, shall provide suitable pilot shelter platforms for the assisting pilots. The purpose for the pilot platforms is to provide shelters from sun and rain for pilots working near the bow or the stern of a vessel and to provide adequate visibility around the locks in order to reduce the danger of damage. In general, this bow/stern pilot shelter platforms are required on ships of 190.5 meters (625 feet) or more in length and a beam of 30.5 meters (100 feet) or greater. They may also be required on certain smaller ships that the Marine Director or his designated representative determine require three or more pilots. Those vessels requiring shelters shall provide them for use no later than six months from the effective date of the final rule.

(b) The following is a sketch of a simplified pilot platform which is acceptable to the Panama Canal Commission:

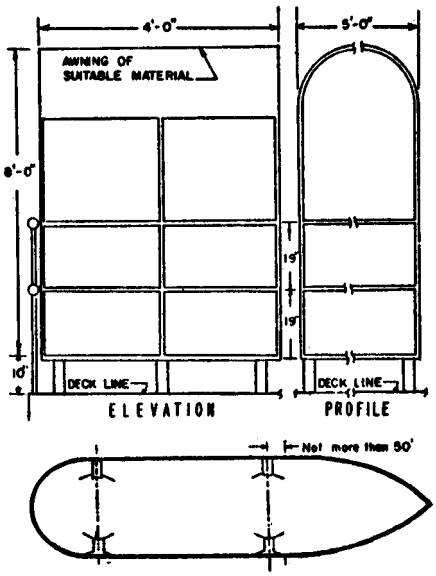

(c) Each platform is to be erected over the furthest forward point of the extreme beam at the waterline and not more than six inches from the vertical plane of shell plating. For vessels of unorthodox design requiring aft platforms, they shall be erected at a position which is approximately over the aftermost point of extreme beam at the waterline and not more than six inches inboard from the vertical plane of shell plating.

(d) In addition to the pilot shelter platforms required by paragraph (a) of this section for assisting pilots, all vessels whose extreme beam is 24.4 meters (80 feet) or more, are required to provide bridge wing shelters for the protection of control pilots. The following is a sketch of a bridge wing shelter that is acceptable to the Panama Canal Commission. Alternate arrangements, including portable shelters, which provide equivalent or better protection and visibility may be acceptable.

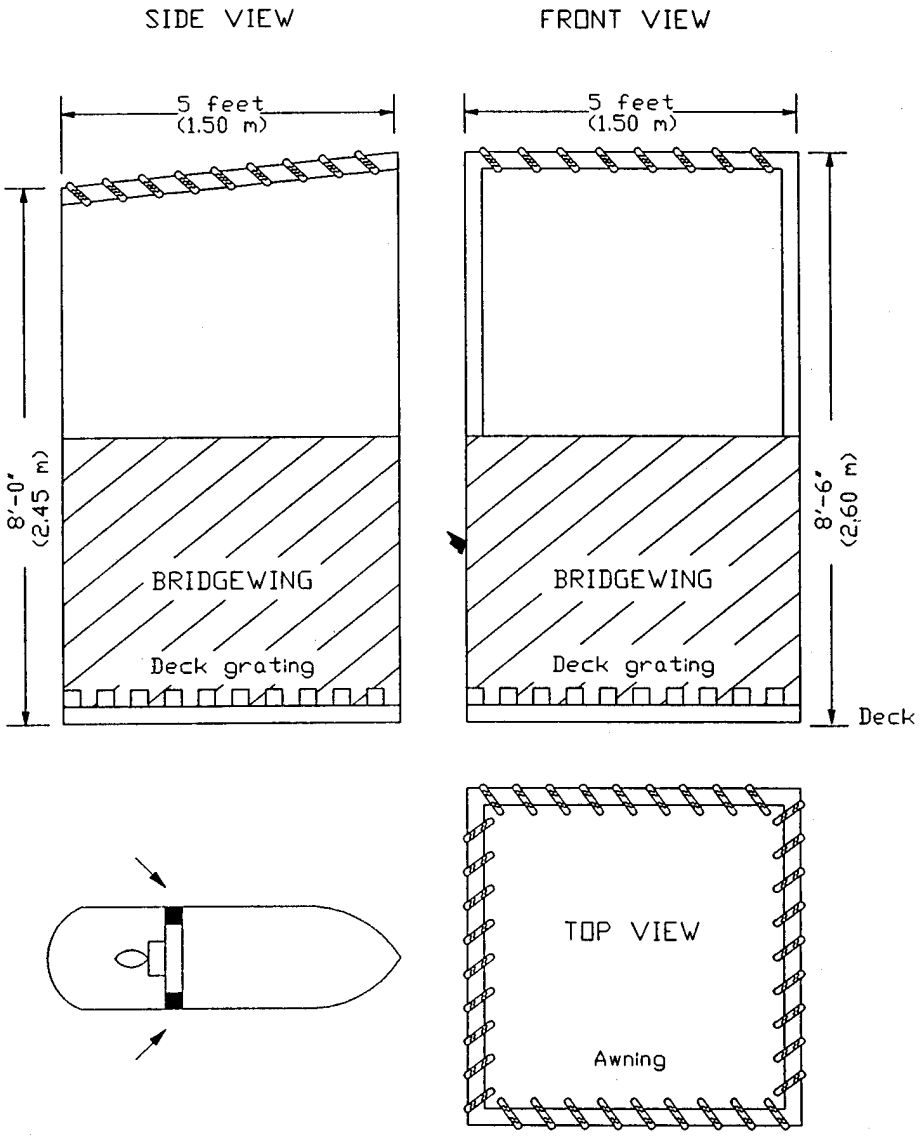
SIDE VIEW
FRONT VIEW
5 feet
(1.50 m)
5 feet
(1.50 m)
8'-0"
(2.45 m)
8'-6"
(2.60 m)
BRIDGEWING
Deck grating
BRIDGEWING
Deck grating
Deck
TOP VIEW
Awning

(e) The purpose of the bridge wing shelter is to provide protection for pilots from sun and rain, while allowing maximum visibility around the locks. On vessels that have a raised conning station at the edge of the bridge wing more than 30 centimeters (1 foot) above the deck level, the height of the awning should be raised accordingly. Awnings are to extend at least 1.52 meters (5 feet) inboard from the outboard edge of the bridge wing. Similarly, their fore-and-aft dimension is to be at least 1.52 meters (5 feet), extending aft from the forward part of the bridge wing. If ship control equipment (engine, rudder or thruster controls, etc.) are located on the bridge wings, these shelters must also extend at least one foot beyond such equipment but must not extend beyond the outboard edge of the bridge wing.

(f) The awnings indicated in the sketches in paragraphs (b) and (d) of this section are to be made of suitable material to provide shelter from sun and rain. The decks of the pilot shelter platforms are to be made of wood or other material with a non-skid surface.

[46 FR 63176, Dec. 30, 1981, as amended at 54 FR 43962, Oct. 30, 1989]

§ 103.20 Disabling of engines.

Except when specifically authorized by the Canal authorities, no vessel at any dock or mooring within Canal waters shall have its engines disabled or otherwise rendered inoperative.

§ 103.21 Precautions against emission of sparks, smoke or noxious gases.

Vessels in Canal waters shall take all necessary precautions to avoid the issuance of sparks, excessive smoke, or noxious gases.

§ 103.25 Fishing or placing of nets or other obstructions prohibited.

No fishing nets or other obstructions shall be placed in any of the navigable waters of the Panama Canal. Fishing boats shall not anchor for the purpose of fishing nor haul nets or trawls in the anchorages or navigable channels of the Canal. Fishing from small craft in the anchorages or navigable channels of the Canal is prohibited.

§ 103.26 Obstructions not to be placed across channels or anchorages.

No line, pipe, or other obstruction shall be passed across any channel or anchorage so as to obstruct the passage of vessels.

§ 103.27 Clear view forward from the bridge and steering light requirement for certain vessels.

(a) A vessel may not be navigated in Canal waters unless there is a clear, unobstructed view from the bridge.

(b) All vessels over 100 meters (328 feet) in length shall have installed, at or near the stem, a steering range equipped with a fixed blue light which shall be clearly visible from the bridge along the centerline. If said range and light so placed would be partially or completely obstructed, then two such ranges and lights must be installed at an equal distance from the centerline and shall be clearly visible from the bridge along lines parallel to the keel.

(c) Naval or military vessels exempted from the requirements of Part 111 of this chapter shall also be exempt from the requirements of paragraphs (b), (d), and (e) of this section.

(d) The light required by this section shall be capable of being illuminated and extinguished by a suitable control switch located either on the navigation bridge or on the forecastle deck, or both.

(e) The use of this steering light shall be at the discretion of the Panama Canal pilot who has control of the navigation and movement of the vessel.

(f) This section will be effective January 1, 1971.

[35 FR 12274, July 31, 1970, as amended at 46 FR 63181, Dec. 30, 1981; 48 FR 6709, Feb. 15, 1983]

§ 103.28 Towing of certain vessels required.

A vessel arriving at an entrance to the Canal and having a mean draft in excess of that allowed under the Load Line Regulations for the tropical zone, applicable for the voyage on which the vessel is engaged, as determined by the American Bureau of Shipping, Lloyd's Register or other acceptable certifying agency, is required to take the services of a Panama Canal tug or tugs from the Pacific entrance Channel Buoys 1

and 2 to Gamboa Reach, from the north end of Gatun Locks to Buoy 3 in the Atlantic harbor, and vice versa. However, in the instances where the overdraft is negligible, the assignment of a tug or tugs may be waived at the discretion of the Canal Operations Captain or his designee. Any vessel without mechanical motive power, or the machinery of which is or becomes disabled, or which steers badly, or which is liable to become unmanageable for any reason, shall be towed through the Canal. The Canal authorities may require any vessel to take a tug or tugs through Gaillard Cut, in the approaches to the locks, or in any other part of the Canal, when in their judgment such action is necessary to insure reasonable safety to the vessel or to the Canal and its appurtenances. The tug service in any of these cases shall be chargeable to the vessel. The Master of a vessel which steers badly, or which is liable to become unmanageable for any reason, shall report such fact and request the services of a tug.

[46 FR 63176, Dec. 30, 1981, as amended at 55 FR 11908, Mar. 30, 1990]

§ 103.29 Anchoring in Panama Canal waters.

No vessel shall anchor within the navigable waters of the Canal in other than a designated anchorage, except in an emergency, and no craft shall tie up to any aid-to-navigation in Canal waters.

§ 103.30 Requirements for all dead tows.

(a) *Preparation for transit*—(1) Upon arrival, the tug will break up the tow and secure the bridle so that no part of it extends below the surface of the water.

(2) Tows shall have the capability of anchoring.

(3) Tows will be inspected before being scheduled for transit.

(4) Agents, operators and owners will be responsible for making any required alterations or additions to equipment or stowage.

(5) Boarding facilities will comply with Regulation 17, Chapter V, International Convention for Safety of Life at Sea, 1974, TIAS 9700. There must be a clear passage, free of obstructions, from the boarding facility to all working areas, otherwise, catwalks with handrails and steps must be provided.

(6) The working area near chocks and bitts on all dead tows must be clear of obstructions and fitted with safety rails or lines at the vessel's sides.

(b) *Transit requirements*—(1) Tows must provide a pilot shelter with a clear view forward, on the center line, approximately midway between the bow and stern. This shelter may be permanent or portable, but must protect the pilot from the elements. All tows with a beam in excess of 79.9 feet shall provide, in addition to the center line shelter, pilot shelters at the extreme beams from which the pilots may readily view the vessel's sides.

(2) Dead tows must be equipped with the chocks and bitts as set forth in § 109.6 of this chapter.

(3) Tows must provide mooring and heaving lines and have mooring arrangements, and bitts or cleats for securing tugs that do not interfere with those chocks and bitts required for locomotive wires.

(4) All barges will be fitted so that a pusher tug can be secured with its stem held firmly to the center line of the barge. Pushing tugs are to be equipped with wire cable snubbers and springs.

(5) All barges will be required to have portable toilets on board prior to departure for transit.

§ 103.32 Engine orders to be recorded.

(a) Except as provided in paragraph (b) of this section, every power-driven vessel over 250 feet in length, while navigating in Panama Canal waters under the control of a Panama Canal pilot, shall maintain a bridge bell book and an engine room bell book. The bridge bell book shall consist of a contemporaneous record of each engine order and the time it is transmitted from the bridge to the engine room. The engine room bell book shall consist of a contemporaneous record of each engine order and the time it is received in the engine room.

(b) No vessel is required to maintain any bell books if equipped with a serviceable automatic device which produces a permanent, legible record of every engine order transmitted from

the bridge and the time of every transmission, plus the response and time of the response of the engine room to the engine order.

(c) The bell books and automatic recording referred to in paragraphs (a) and (b) of this section, the record of an automatic course recording device, if one is available, and any log books must be surrendered, upon request, to the pilot or to the Board of Local Inspectors or other Canal authorities for the purpose of inspection and reproduction.

(Approved by the Office of Management and Budget under control number 3207–0001)

[41 FR 21776, May 28, 1976, as amended at 46 FR 63181, Dec. 30, 1981; 50 FR 26991, July 1, 1985]

§ 103.33 Navigation in Gaillard Cut.

No vessel other than a vessel transiting the Canal shall navigate in Gaillard Cut except with the express prior approval of the Canal authorities.

[31 FR 12289, Sept. 16, 1966]

§ 103.34 Same; control by Canal Operations Captain.

The movement of vessels in Gaillard Cut shall be regulated by the Canal Operations Captain through Marine Traffic Control, or by such other persons and through such other stations or facilities as the Canal authorities may designate.

[46 FR 63176, Dec. 30, 1981, as amended at 55 FR 11908, Mar. 30, 1990]

§ 103.39 Arrow signals; locks.

Choice between east and west chambers shall be made by the Locks Superintendent. Pilots shall stand toward the chamber indicated and shall comply with the arrow signal unless unsafe to do so.

Not ready; lockage cannot take place for some time

Not ready; stand off well clear of lock, prepared to approach on signal

Locks making preparation, probably be ready in 10 minutes or less; you may approach with caution, prepared to tie up or enter on right-hand side on signal

Locks making preparation, probably be ready in 10 minutes or less; you may approach with caution, prepared to tie up or enter on left-hand side on signal

Moor to approach wall near chain on right-hand side

Moor to approach wall near chain on left-hand side

Enter *right*-hand side

Enter *left*-hand side

[31 FR 12289, Sept. 16, 1966]

§103.40 Transit schedules; pennants.

(a) When a pilot is assigned to a ship for northbound or southbound canal transit he shall be given a schedule number and the expected time of arrival at south end of Miraflores Locks or at north end of Gatun Locks.

(b) Northbound ships shall fly ''H'' under International numeral pennant corresponding to schedule assigned.

Southbound ships shall fly ''H'' over International numeral pennant corresponding to schedule assigned.

In addition: Preference ships shall fly ''Z'' (blue light at night); hazardous cargo will fly ''B'' (red light at night).

(c) Ships maneuvering in Canal waters with pilot on board shall fly ''H''.

[31 FR 12289, Sept. 16, 1966]

§103.41 Ships to display schedule number.

Each ship shall display throughout her transit, the flag or flags designating the schedule number on which it is running.

§103.42 Maneuvering characteristics; data required.

(a) Each vessel of 1,600 gross tons or over shall have the following maneuvering information prominently displayed in the wheelhouse on a fact sheet:

(1) For full and half speed, a turning circle diagram to port and starboard that shows the time and the distance of advance and transfer required to alter the course 90 degrees with maximum rudder angle and constant power settings.

(2) The time and distance required to stop the vessel from full and half speed while maintaining approximately the initial heading with minimum application of rudder.

(3) For each vessel with a fixed propeller, a table of shaft revolutions per minute for a representative range of speeds.

(4) For each vessel with a controllable pitch propeller, a table of control settings for a representative range of speeds.

(5) For each vessel that is fitted with an auxiliary device to assist in maneuvering, such as a bow thruster, a table of vessel speeds at which the auxiliary device is effective in maneuvering the vessel.

(b) For tankships, the maneuvering information referred to in paragraph (a) of this section shall be provided for the normal load and normal ballast condition. For all other vessels, it shall be provided for the normal load and normal light condition with normal trim for a particular condition of loading. All the maneuvering information for all vessels which must be provided is to be based on the following:

(1) Calm weather—wind 10 knots or less, calm sea;

(2) No current;

(3) Deep water conditions—water depth twice the vessel's draft or greater; and

(4) Clean hull.

(c) The information on the fact sheet shall be:

(1) Verified six months after the vessel is placed into service; or

(2) Modified six months after the vessel is placed into service and verified within three months thereafter.

(d) The information that appears on the fact sheet may be obtained from:

(1) Trial trip observations;

(2) Model tests;

(3) Analytical calculations;

(4) Simulations;

(5) Information established from another vessel of similar hull form, power, rudder and propeller; or

(6) Any combination of the above.

The accuracy of the information in the fact sheet required is that attainable by ordinary shipboard navigation equipment.

(Approved by the Office of Management and Budget under control number 3207–0001)

[41 FR 21776, May 28, 1976. Redesignated at 46 FR 63182, Dec. 30, 1981, and amended at 50 FR 26991, July 1, 1985]

PART 104—VESSEL TRANSIT RESERVATION SYSTEM

Sec.

104.1 Applicability and scope.
104.2 Definitions.
104.3 Booking periods; allocation of booking slots.

104.4 Booked transits.
104.5 Passenger vessel preference.
104.6 Booking fees.
104.7 Penalties.
104.8 Re-scheduling.
104.9 Cancellations.
104.10 Regular transits.
104.11 Temporary suspension of system.
104.12 Further implementation.

AUTHORITY: 22 U.S.C. 3811.

SOURCE: 62 FR 18276, Apr. 15, 1997, unless otherwise noted.

§ 104.1 Applicability and scope.

Subject to the limitations imposed by Article III of the 1901 Treaty to Facilitate the Construction of a Ship Canal, entered into by the United States and Great Britain, and by Articles II and VI of the 1977 Treaty concerning the Permanent Neutrality and Operation of the Panama Canal, between the United States and the Republic of Panama, Canal authorities have implemented a vessel transit reservation system that allows vessels desiring transit of the Panama Canal to reserve transit slots by complying with the provisions of this part.

§ 104.2 Definitions.

(a) *Booked for transit* means that a vessel, in advance of arriving at the Canal, has been assigned a specific date by Canal authorities on which it will be moved through the Canal and that the vessel has otherwise complied with the provisions of this part.

(b) *Regular transit* means movement through the Canal of a vessel that has not been booked for transit.

(c) *Required arrival time* means the date and the hour of the day established by Canal authorities as the deadline by which a vessel booked for transit must arrive at a terminus of the Canal in order to transit on its reserved transit date.

§ 104.3 Booking periods; allocation of booking slots.

(a) Vessel agents only may request reserved transit slots for vessels during the following booking periods:

(1) First period—365 to 22 days prior to the requested transit date.

(2) Second period—21 days to 4 days prior to the requested transit date.

(3) Third period—3 to 2 days prior to the requested transit date.

(b) A total of 21 reserved transit slots will be made available for all three booking periods, allocation of which among the booking periods is to be determined by Canal authorities. Canal authorities, from time to time, may adjust the total number of available reserved transit slots to ensure continued safe and efficient operation of the Canal.

§ 104.4 Booked transits.

(a) The specific order vessels transit the Canal, whether booked or regular transits, shall be determined by Canal authorities. Except as provided in this part, a vessel booked for transit may not transit prior to its reserved transit date, unless Canal authorities determine that assigning the vessel an earlier transit slot would not impair safe and efficient operation of the Canal.

(b) Notwithstanding any subsequent assignment of an earlier transit slot, a vessel booked for transit will be charged the prescribed booking fee.

(c) Substitution of reserved transit slots between or among vessels booked for transit will be permitted only on conditions specified by Canal authorities.

§ 104.5 Passenger vessel preference.

To the extent consistent with efficient operation of the Canal, and subject to being booked for transit, commercial passenger vessels running on fixed published schedules will be given preference over other vessels in transiting, as determined by Canal authorities.

§ 104.6 Booking fees.

(a) The booking fee for reserving a transit slot for a vessel measured in accordance with § 135.13(a) of this chapter, shall be $0.26 per PC/UMS Net Ton.

(b) The booking fee for reserving a transit slot for a vessel subject to transitional relief measures and measured in accordance with § 135.13(b) of this chapter, shall be $0.23 per Panama Canal Gross Ton, as specified on the last tonnage certificate issued to the vessel by Canal authorities between March 23, 1976 and September 30, 1994, inclusive.

(c) Notwithstanding any contrary provision, whenever the total number

of vessels awaiting transit at both terminuses of the Canal is projected by Canal authorities to be, within 48-hours, 90 or more vessels, any vessel booked for transit that transits the Canal while this condition is in effect shall automatically be assessed a booking fee of $0.69 per PC/UMS Net Ton.

(d) Notwithstanding any contrary provision, the minimum booking fee for any vessel booked for transit shall be $1500.

§104.7 Penalties.

(a) The reserved transit slot of a vessel booked for transit will be cancelled by Canal authorities and a penalty fee assessed in a sum that is the greater of the prescribed booking fee or $1,500, in the following situations:

(1) When a vessel that is subject to transit restrictions (e.g., clear cut, clear-cut daylight) has been booked for transit and does not arrive at a terminus of the Canal by 0200 hours of the day of the scheduled transit;

(2) When a vessel that is not subject to transit restrictions has been booked for transit and does not arrive at a terminus of the Canal by 1400 hours of the day of the scheduled transit; or

(3) When a vessel booked for transit arrives on time but cannot or, at the vessel operator's election, does not transit as scheduled, despite the readiness of Canal authorities to proceed.

(b) Canal authorities may waive assessment of a penalty fee if the vessel agent presents acceptable proof that late arrival of the vessel was due to a medical or humanitarian emergency arising during the voyage, or a naturally occurring, extraordinary phenomenon or event of major proportions that could not have been reasonably predicted in advance.

(c) Failure of the vessel agent to provide complete and accurate information required by Canal authorities when requesting transit bookings may result in rejection of the booking request or cancellation of the vessel's reserved transit slot.

(d) When a vessel's reserved transit slot is cancelled, and unless otherwise directed by the vessel agent, upon arrival, Canal authorities will re-schedule the vessel for regular transit.

§104.8 Re-scheduling.

(a) Except as otherwise provided, a vessel agent, without penalty, may request cancellation of a vessel's reserved transit slot and rescheduling of the vessel for regular transit or, alternatively, may request assignment of an alternate reserved transit slot, in the following situations:

(1) If for whatever reason Canal authorities cancel or significantly delay the transit of a vessel booked for transit that is otherwise ready to proceed as scheduled;

(2) If for whatever reason Canal authorities delay the transit of a vessel booked for transit to such a degree that the delay is likely to cause the vessel to be unable to meet its required arrival time for a later, second reserved transit, booked before the delay of the first reserved transit occurred; or

(3) If a vessel is booked for transit on the assumption that the vessel will pay the booking fee prescribed by §104.6(a) or (b) but, subsequently, a change in traffic conditions occurs triggering the higher booking fee prescribed by §104.6(c).

(b) A vessel booked for transit will be deemed to have transited the Canal on its reserved transit date if the vessel arrives at the first set of locks at either terminus of the Canal prior to 2400 hours that day and its in-transit time (ITT) is 18 hours or less. ITT begins when the vessel enters the first set of locks at either Canal terminus and ends when the vessel departs the last set of locks at the opposite terminus. No booking fee will be charged if ITT, through no fault of the vessel, exceeds 18 hours.

§104.9 Cancellations.

(a) A vessel agent may cancel the transit reservation of a vessel by giving notice prescribed by Canal authorities. In such event, and except as otherwise provided, a cancellation fee will be charged. The amount of the fee will depend on the amount of notice (days or hours) received by Canal authorities in advance of the vessel's required arrival time, according to the following schedule:

Advance notice periods	Cancellation fee (the greater of)
31 days or more	None
30 to 11 days	20% of booking fee or $500
10 to 7 days	40% of booking fee or $750
6 to 2 days	60% of booking fee or $1,000
1 day to 8 hours	80% of booking fee or $1,200

(b) Receipt of notice of cancellation of a transit reservation by Canal authorities after the vessel's required arrival time will result in levy of a cancellation fee equal to the entire prescribed booking fee.

§ 104.10 Regular transits.

Vessels not booked for transit will be scheduled for movement through the Canal on the date and in the order determined by Canal authorities. In establishing the daily schedule of vessels to be moved through the Canal, the order in which vessels arrive is only one of several considerations. In general, regular transits will equal or exceed in number, one-half the total number of daily vessel transits.

§ 104.11 Temporary suspension of system.

(a) Canal authorities may temporarily suspend, in whole or in part, for whatever period of time deemed necessary, the vessel transit reservation system established by this part, whenever Canal authorities determine that such action is necessary to ensure continued safe and efficient operation of the Canal.

(b) No penalty or fee shall be levied against any vessel booked for transit whose reserved transit slot is cancelled by reason of a temporary suspension of the system pursuant to this section.

§ 104.12 Further implementation.

(a) In order to ensure safe and efficient operation of the system, Canal authorities may establish additional policies and procedures, define additional terms and issue clarifications and interpretations not inconsistent with the provisions of this part, which will be published and distributed periodically to Canal customers through notices to shipping or other appropriate means.

(b) In the event any provision of this part conflicts with any implementation provision issued pursuant to this section, the provisions of this part shall govern.

PART 105—PILOTAGE

Sec.
105.1 Pilots required.
105.2 Exemptions from compulsory pilotage.
105.3 Vessels in distress.
105.4 Pilotage charges.
105.5 Pilotage beyond Atlantic breakwater.
105.6 Status and function of pilot.
105.7 Status and function of transit advisor.

AUTHORITY: Issued under authority of the President by 22 U.S.C. 3811, E.O. 12215, 45 FR 36043.

SOURCE: 46 FR 63182, Dec. 30, 1981, unless otherwise noted.

§ 105.1 Pilots required.

(a) Except as provided by §§ 105.2, 105.3, and 105.7 or by paragraph (c) of this section, no vessel shall pass through, enter or leave the Canal, or maneuver in the Canal or waters adjacent thereto, including the ports of Cristobal and Balboa, without having a Panama Canal pilot on board.

(b) Normally a vessel will, unless advised to the contrary by the Canal Operations Captain or his designee, be boarded by the Panama Canal pilot inside the breakwater at a point north of the Mole Beacon at the Atlantic entrance and in the Merchant Vessel Anchorage to seaward of Buoys 1 and 2 at the Pacific entrance.

(c) In conformity with past practice, vessels anchored in Anchorage Area C and Anchorage Area F, as shown in the Pilot Handbook, Limon Bay Chart, may proceed to sea without a Panama Canal Pilot on board. All such vessels, prior to getting under way, must obtain permission to depart from the Cristobal Signal Station.

(d) Whenever the Administrator finds there is a critical shortage of certified Panama Canal pilots available for movement of vessels in Canal waters, he may suspend the rule on compulsory pilotage set out in paragraph (a) of this section. The Administrator shall impose such conditions upon the suspension of the rule, with respect to any given vessel, as are reasonable and appropriate to protect human life and

property and to safeguard the facilities of the Panama Canal.

[46 FR 63182, Dec. 30, 1981; 47 FR 54072, Dec. 1, 1982, as amended at 51 FR 36011, Oct. 8, 1986; 55 FR 11909, Mar. 30, 1990]

§105.2 Exemptions from compulsory pilotage.

The following vessels are exempt from compulsory pilotage, except when the Canal Operations Captain or his designee considers a pilot necessary; nevertheless a pilot will be furnished any such exempted vessel if requested by the commanding officer or Master thereof:

(a) Local craft such as United States Army and United States Navy minesweepers, landing craft, patrol boats and tugs, and Panama Canal Commission tugs and equipment, except as limited by paragraph (c) of this section.

(b) Any vessel that makes frequent calls to Canal waters and whose current officers and crew are, in the opinion of the Canal Operations Captain or his designee, capable, by reason of such frequent calls and otherwise, of safely navigating within Canal waters and are so certified, except as limited by paragraph (c) of this section.

(c) Vessels and craft enumerated in paragraphs (a) and (b) of this section may be permitted to transit the Canal without a pilot when, in the opinion of the Canal Operations Captain or his designee, the current officers and crew have the necessary experience and ability to make safe transit and such transit is specifically approved. Whenever any such vessel or craft makes transit without a pilot, the Canal Operations Captain or his designee shall dispatch it with a larger vessel carrying a pilot and it shall lock through with that vessel. The Canal Operations Captain or his designee shall control the movements of such vessel or craft through Gaillard Cut so as to minimize the danger of its being a navigational hazard to larger vessels.

(d) Any other vessel or craft as and to the extent exempted by the Marine Director.

[46 FR 63182, Dec. 30, 1981, as amended at 55 FR 11909, Mar. 30, 1990]

CROSS REFERENCE: Vessels passing through locks without pilot aboard, in accordance with this section, to be under direction of Lockmaster, see §109.7(b).

§105.3 Vessels in distress.

A vessel in danger or distress is not prohibited from entering the waters of the Canal any time, but such vessel shall, when practicable, give due notice in advance, by radio or otherwise, and obtain a pilot, if possible. Such vessel shall, except in an emergency, anchor in the designated anchorage area.

CROSS REFERENCE: Merchant-vessel anchorage, see §101.8.

§105.4 Pilotage charges.

Pilotage for vessels in transit through the canal is free, but whenever any vessel requires a pilot for other than transit, it is liable for the applicable pilotage charge.

§105.5 Pilotage beyond Atlantic breakwater.

Should a vessel desire a pilot to meet it outside the Atlantic breakwaters, such vessel shall remain there and make signal to that effect.

[31 FR 12292, Sept. 16, 1966]

§105.6 Status and function of pilot.

The pilot assigned to a vessel shall have control of the navigation and movement of such vessel.

[31 FR 12292, Sept. 16, 1966]

§105.7 Status and function of transit advisor.

Vessels less than 20 meters in length, except those described in §105.2 (a) and (b), will be assigned a Panama Canal Commission transit advisor in lieu of a Panama Canal pilot. The transit advisor will function as an advisor, whose presence is necessary to provide comprehensive local knowledge of the Canal operating area and procedures for an efficient and safe transit.

[51 FR 36011, Oct. 8, 1986]

PART 107—MANNING OF VESSELS: REQUIREMENTS CONCERNING OFFICERS AND CREW

Sec.
107.1 Vessels to be fully manned.
107.2 Crew on watch.

107.3 When Master and officers must be on bridge or at other regular stations.
107.4 When Chief Engineer must be on duty; full head of steam to be maintained.
107.5 When particular deck officers and seamen must be on duty.
107.6 Unauthorized persons not allowed on bridge.

AUTHORITY: Issued under authority of the President by 22 U.S.C. 3811; E.O. 12215, 45 FR 36043.

§ 107.1 Vessels to be fully manned.

(a) A vessel navigating the waters of the Canal shall be sufficiently manned in officers and crew to permit safe handling of the vessel.

(b) If the nation of registry of a vessel has implemented the International Convention on Standards of Training, Certification and Watchkeeping for Seafarers, 1978 (STCW), which is hereby incorporated by reference, the officers and crew shall meet the standards set forth therein. This Convention is contained in the International Maritime Organization publication number 938 78.15.E ''International Conference on Training and Certification of Seafarers, 1978.'' In the event that the nation of registry has not adopted the STCW, the certification required for officers and crew as required by the country of vessel registry shall be met.

(c) The Canal authorities may deny transit of the Canal to any vessel which, in their opinion, is insufficiently manned as to officers and crew.

[50 FR 19679, May 10, 1985]

§ 107.2 Crew on watch.

(a) When under way in Canal waters, a vessel shall keep a full watch on deck and in the engine room. When approaching a lock, moored temporarily to a lock wall or when in a lock chamber, a vessel shall, when so requested by the pilot, have sufficient seamen forward and aft to handle lines expeditiously.

(b) Except as provided in paragraph (c) of this section, when anchored, moored, or lying at a Panama Canal Commission pier a vessel shall at all times have on board at least one qualified deck officer, one qualified engineer officer familiar with the machinery and layout of the vessel, and sufficient crew to provide for the safety of the vessel.

(c) The manning levels of Commission vessels shall be determined by the Marine Director or his designee.

[46 FR 63182, Dec. 30, 1981; 47 FR 54072, Dec. 1, 1982]

§ 107.3 When Master and officers must be on bridge or at other regular stations.

(a) When a vessel is entering or leaving a lock, docking or undocking, getting under way, anchoring, mooring or shifting berth, or is underway in Gaillard Cut, the Master shall be on the bridge and shall keep the Pilot informed concerning any individual peculiarities in the handling of the vessel so that the Pilot may be better able to control the navigation and movement of the vessel. All other officers shall be at their regular stations throughout the times and maneuvers described herein.

(b) At all other times when a vessel is moving in Canal waters, the Master of the vessel, or his qualified representative, shall be present on the bridge and shall keep the pilot informed concerning the individual peculiarities in the handling of the vessel so that the pilot may be better able to control the navigation and movement of the vessel. All other officers shall be at their regular stations throughout the maneuvers described herein.

(c) The Master, or his qualified representative, shall ensure at all times that the pilot's orders are promptly and properly carried out by the vessel's personnel.

[31 FR 12293, Sept. 16, 1966, as amended at 46 FR 63182, Dec. 30, 1981]

§ 107.4 When Chief Engineer must be on duty; full head of steam to be maintained.

(a) In addition to the regular engineer officer of the watch, the Chief Engineer of a vessel shall remain on duty in the engine room during the approach to, and while passing through, the locks and until the lockage is completed and the vessel is clear of the lock walls. The Chief Engineer shall also be on duty in the engine room while the vessel is passing through Gaillard Cut, docking or undocking,

getting underway, anchoring, mooring, or shifting berth.

(b) A full head of steam or full diesel power, as the case may be, shall be maintained at all times mentioned in paragraph (a) of this section.

[31 FR 12293, Sept. 16, 1966]

§107.5 When particular deck officers and seamen must be on duty.

(a) When a vessel is getting underway, anchoring, mooring, or is underway in Gaillard Cut, a ship's officer shall stand by on the forecastle.

(b) When a vessel is entering, in, or leaving a lock, docking or undocking, or shifting berth, a ship's officer shall stand by on the forecastle and a ship's officer shall also stand by on the stern.

(c) Every vessel with a Panama Canal pilot aboard shall, in addition to meeting the requirements of paragraphs (a) and (b) of this section, have a seaman stationed on the forecastle who is capable of and ready to operate the ground tackle.

[31 FR 12293, Sept. 16, 1966, as amended at 41 FR 21777, May 28, 1976]

§107.6 Unauthorized persons not allowed on bridge.

While a vessel is underway, no person shall be allowed on the bridge or in the pilot house except the pilot and other representative of the Panama Canal, and the Master and such officers and other members of the crew of the vessel as may be necessary for its navigation and control, management, operation and safety.

[31 FR 12293, Sept. 16, 1966]

PART 109—ENTERING AND PREPARING TO ENTER THE LOCKS

Sec.

109.1 Keeping persons clear of gear used in lockages.
109.2 Embarking or disembarking at locks.
109.3 Same; permits.
109.4 Locomotives; Canal deckhands.
109.5 Ship's gear to be ready during transit; test.
109.6 Construction, number, and location of chocks and bitts.
109.7 Passing through locks; use of towing locomotives and ship's engines.

AUTHORITY: Issued under authority vested in the President by sec. 1801, Pub. L. 96–70, 93 Stat. 492; EO 12215, 45 FR 36043.

SOURCE: 31 FR 12294, Sept. 16, 1966, unless otherwise noted.

§109.1 Keeping persons clear of gear used in lockages.

The master and officers of a vessel shall require all passengers and all other persons not engaged in working the vessel to keep well clear of lines, bitts, chocks, winches and other gear being used in connection with the lockage.

§109.2 Embarking or disembarking at locks.

Except when specially authorized by the Canal authorities, no person shall embark upon or disembark from a vessel while it is in a lock. The Canal authorities shall not be responsible for any injuries to persons or property or for damage to vessels which may result from the granting of such special permission.

§109.3 Same; permits.

Permits for embarking or disembarking at the locks may be issued in the discretion of the Marine Director or designee.

[55 FR 11909, Mar. 30, 1990]

§109.4 Locomotives; Canal deckhands.

The Canal authorities are authorized to prescribe:

(a) The number of towing locomotives and wires required in the locks by a transiting vessel, depending upon her length, beam, displacement, and special conditions; and

(b) The number of Canal deckhands to be placed on board a transiting vessel to assist her crew in handling towing wires in the locks.

§109.5 Ship's gear to be ready during transit; test.

Before beginning transit of the Canal, a vessel shall have hawsers, lines and fenders ready for passing through the locks, for warping, towing, or mooring as the case may be; and shall have both anchors ready for letting go. The Master shall assure himself, by actual test, of the readiness of his vessel's main engines, steering

gear, engine room telegraphs, whistle, rudder-angle and engine-revolution indicators, and anchors. During the transit, at all times while a vessel is underway or moored against the lock walls, her deck winches, capstans, and other power equipment for handling lines, as well as her mooring bitts, chocks, cleats, hawse pipes, etc., shall be ready for handling the vessel, to the exclusion of all other work.

§ 109.6 Construction, number, and location of chocks and bitts.

(a) The Canal Operations Captain or designee is responsible for determining if vessels arriving for transit are properly equipped. That official is also responsible for the approval of new construction requirements concerning chocks and bitts which are utilized for locomotives and tugs, relay operations, tie-up operations, boarding facilities, and wheelhouse design features, including visibility factors.

(b) All chocks for towing wires shall be of heavy closed construction and shall have a convex bearing surface with a radius of not less than seven inches (178 millimeters). The convex surface shall extend so that a wire from the bitt, or from the towing locomotive through the chock, shall be tangent to the seven-inch (178 millimeter) radius at any angle up to 90 degrees with respect to a straight line through the chock.

(c) No part of the vessel which may be contacted by the towing wires, at any angle, shall have less than a seven-inch radius.

(d) Chocks designated as single chocks shall have a throat opening of not less than 100 square inches (645 square centimeters) in area—preferred dimensions are 12 x 9 inches (305 x 229 millimeters)—and shall be capable of withstanding a strain of 100,000 pounds (43,331 kilograms) on a towing wire from any direction.

(e) Chocks designated as double chocks shall have a throat opening of not less than 140 square inches (903 square centimeters) in area—preferred dimensions are 14 x 10 inches (356 x 254 millimeters)—and shall be capable of withstanding a strain of 140,000 pounds (64,000 kilograms) on the towing wires from any direction.

(f) Use of roller chocks is permissible provided they are not less than 14.94 meters (49 feet) above the waterline at the vessel's maximum Panama Canal draft and provided they are in good condition, meet all of the requirements for solid chocks as specified in paragraphs (a), (b), (c), and (d) of this section, as the case may be, and are so fitted that transition from the rollers to the chock body will prevent damage to towing wires.

(g) Each single chock shall have an accompanying bitt capable of withstanding a strain of 100,000 pounds (45,331 kilograms).

(h) Each double chock located at the stem and at the stern, in accordance with paragraph (h) of this section, shall have two pairs of heavy bitts with each bitt of each pair capable of withstanding a strain of 100,000 pounds (45,331 kilograms). Other double chocks shall have a pair of heavy bitts with each bitt capable of withstanding a strain of 100,000 pounds (45,331 kilograms).

(i) All vessels, except a vessel not requiring locomotives, shall be fitted with a double chock set athwartships right in the stem and another double chock set athwartships right in the stern, except that on vessels of less than 75 feet beam, two single chocks may be substituted for each double chock required by this subsection; on vessels of over 75 feet beam, two double chocks may be substituted for each double chock required by this section. If such substitution is made, the chocks shall be placed port and starboard not more than eight feet abaft the stem or 10 feet forward of the stern, provided that these chocks are not more than 10 feet from the center line of the vessel.

(j) Vessels under 60.06 meters (200 feet) in length and not exceeding 9.14 meters (30 feet) in beam shall have a double chock or two single chocks at the stem and stern. If the vessel is equipped with the two single chocks, they shall be placed, port and starboard, not more than eight feet abaft the stem or 10 feet forward of the stern, and not more than 10 feet off the center line.

(k) Vessels 60.96 to 121.92 meters (200 to 400 feet) in length and not exceeding 22.86 meters (75 feet) in beam shall have

a double chock at the stem and at the stern or two single chocks at the bow and stern, port and starboard, not more than eight feet abaft the stem or 10 feet forward of the stern and not more than 10 feet off the center line and shall have two additional single chocks, port and starboard, nine to 16 meters (30 to 50 feet) abaft the stem and nine to 16 meters (30 to 50 feet) forward of the stern.

(l) Vessels 121.92 to 173.74 meters (400 to 570 feet) long and not more than 22.86 meters (75 feet) in beam shall have a double chock at the stem and stern or two single chocks at the bow and stern, port and starboard, and in addition shall have a chock, port and starboard, 12 to 16 meters (40 to 50 feet) abaft the stem, a single chock port and starboard, 24 to 28 meters (80 to 90 feet) abaft the stem, and a single chock, port and starboard, 12 to 16 meters (40 to 50 feet) forward of the stern.

(m) Vessels over 173.74 meters (570 feet) long or 22.86 meters (75 feet) in beam or over shall have a double chock at the stem and stern; a double chock, port and starboard, 12 to 16 meters (40 to 50 feet) abaft the stem; a single chock, port and starboard, 24 to 28 meters (80 to 90 feet) abaft the stem; a double chock, port and starboard, 12 to 16 meters (40 to 50 feet) forward of the stern and a single chock, port and starboard, 24 to 28 meters (80 to 90 feet) forward of the stern.

(n) Vessels with large flared bows or unusually high freeboard such as container vessels or vehicle carriers will be required to provide single closed chocks located further aft than those required in paragraph (l) of this section for correct positioning of assisting tugs or may be required to fit recessed tug bollards into the hull so the tugs can work without coming in contact with the bow flare or having extra long lines and/or inefficient leads.

(o) A vessel not requiring locomotives shall have a chock arrangement similar to that described in paragraph (i) of this section, except that the chocks need only be single chocks or, if approved by the Canal authorities, of lesser strength.

(p) Any vessel which fails to meet the requirements of this section may be denied transit. If the Marine Director or his representative decides that such a vessel can be handled without undue danger to equipment or to personnel, notwithstanding her failure to comply with the requirements of this section, and allows it to transit, such vessel may do so only at its own risk and, to the extent and in proportion that such failure to meet the requirements of this section proximately causes or contributes to the casualty and resulting damages, the Master of such vessel, on behalf of said vessel, her owners, operators, or any other persons having any interest in her, and for himself, will be considered to have released the Panama Canal Commission and the United States from, and to have indemnified them against, any loss, damage, or liability incurred by the Commission or the United States under, or in respect to:

(1) Section 1411 through 1416, inclusive, of Pub. L. 96–70, 93 Stat. 485–87;

(2) Property of Panama Canal Commission or the United States; and

(3) Panama Canal Commission employees under the Federal Employees' Compensation Act, 5 U.S.C. 8101, *et seq.*, or any other employee compensation system.

The Master of the vessel that fails to meet the requirements of this section may be required to execute, in the presence of a Commission official, a form undertaking to release the Panama Canal Commission and the United States from liability in case of an accident and to indemnify the Commission and the United States for damages sustained. The failure of the Master of a vessel to sign such a form, however, will not relieve the vessel, her owners, or any other person having an interest in her from liability incurred as a result of the vessel's failure to meet the requirements of this section.

[46 FR 63183, Dec. 30, 1981; 47 FR 54072, Dec. 1, 1982, as amended at 55 FR 11909, Mar. 30, 1990]

CROSS REFERENCE: Federal Employees' Compensation Act, see 5 U.S.C. 8102 *et seq.*

§ 109.7 Passing through locks; use of towing locomotives and ship's engines.

(a) A vessel passing through the locks shall normally be assisted by electric towing locomotives using steel

towing wires. A vessel may be permitted to pass through the locks under her own power in the following circumstances:

(1) A small vessel up to 125 feet in length and a towboat up to 150 feet in length may be handled with their own manila, hemp or synthetic lines along the wall if their structure and fendering will permit their landing against the wall.

(2) A small vessel not over 100 feet in length, having good maneuvering characteristics, may be handled with her own manila, hemp or synthetic fiber lines the center of the chamber.

(b) A vessel passing through the locks without a Pilot aboard, in accordance with the provisions of § 105.2 of this chapter shall be under the direction of the Lockmaster, who may authorize the use of the vessel's engines in the locks.

(c) When a vessel has a Pilot aboard, the use of her engines shall be under the direction of the Pilot. After towing wires from the towing locomotives have been placed aboard a vessel, her engines may be used to the extent considered necessary or desirable by the Pilot.

[31 FR 12294, Sept. 16, 1966, as amended at 40 FR 8348, Feb. 27, 1975]

PART 111—RULES FOR THE PREVENTION OF COLLISIONS

Subpart A—General

Sec.
111.1 Application (Rule 1).
111.2 Responsibility (Rule 2).
111.3 General definitions (Rule 3).

Subpart B—Steering and Sailing Rules

CONDUCT OF VESSELS IN ANY CONDITION OF VISIBILITY

111.4 Application (Rule 4).
111.5 Lookout (Rule 5).
111.6 Safe speed (Rule 6).
111.7 Risk of collision (Rule 7).
111.8 Action to avoid collision (Rule 8).
111.9 Narrow channels (Rule 9).
111.10 [Reserved] (Rule 10).

CONDUCT OF VESSELS IN SIGHT OF ONE ANOTHER

111.11 Application (Rule 11).
111.12 Sailing vessels (Rule 12).
111.13 Overtaking (Rule 13).
111.14 Head-on situation (Rule 14).
111.15 Crossing situation (Rule 15).
111.16 Action by give-way vessel (Rule 16).
111.17 Action by stand-on vessel (Rule 17).
111.18 Responsibilities between vessels (Rule 18).

CONDUCT OF VESSELS IN RESTRICTED VISIBILITY

111.19 Conduct of vessels in restricted visibility (Rule 19).

Subpart C—Lights and Shapes

111.20 Application (Rule 20).
111.21 Definitions (Rule 21).
111.22 Visibility of lights (Rule 22).
111.23 Power-driven vessels under way (Rule 23).
111.24 Towing and pushing (Rule 24).
111.25 Sailing vessels under way and vessels under oars (Rule 25).
111.26 Fishing vessels (Rule 26).
111.27 Vessels not under command or restricted in their ability to maneuver (Rule 27).
111.28 [Reserved] (Rule 28).
111.29 Pilot vessels (Rule 29).
111.30 Anchored vessels and vessels aground (Rule 30).
111.31 Seaplanes (Rule 31).

Subpart D—Sound and Light Signals

111.32 Definitions (Rule 32).
111.33 Equipment for sound signals (Rule 33).
111.34 Maneuvering and warning signals (Rule 34).
111.35 Sound signals in restricted visibility (Rule 35).
111.36 Signals to attract attention (Rule 36).
111.37 Distress signals (Rule 37).

Subpart E—Miscellaneous

111.38 Diving operations (Rule 38).
111.39 Water skiing prohibited (Rule 39).
111.40 Operation of small craft and recreational vessels in Canal waters (Rule 40).
111.41 Lights; marking of pipelines laid in navigable waters (Rule 41).

AUTHORITY: Issued under authority of the President by 22 U.S.C. 3811; E.O. 12215, 45 FR 36043.

SOURCE: 48 FR 52704, Nov. 22, 1983, unless otherwise noted.

Subpart A—General

§ 111.1 Application (Rule 1).

The provisions of this part incorporate most of the Rules of the International Regulations for Preventing

Collisions at Sea, 1972 (72 COLREGS) and the maneuvering and warning whistle signals of the Inland Navigational Rules Act of 1980, supplemented by rules of particular application in the Panama Canal and shall be applicable to vessels and seaplanes upon the navigable waters of the Canal operating areas, as the same are described in Annex A of the Agreement in Implementation of Article III of the Panama Canal Treaty of 1977, and as they are depicted on Attachment 1 to that Annex, between a line connecting the East Breakwater Light and West Breakwater Light at the Altantic Entrance to the Canal in Limon Bay and a line passing through Channel Buoys 1 and 2 extended to the Canal boundary lines at the Pacific Entrance in Panama Bay, and in the Ports of Balboa and Cristobal. Where any naval or military vessel of special construction as certified by the Secretary of the Navy or the Secretary of Transportation in the case of Coast Guard vessels operating under the Transportation Department, or by a corresponding official of a state, other than the United States, shall by virtue of statute, convention or treaty, be exempted from compliance with the International Rules (72 COLREGS), such vessel shall similarly be exempted from compliance with any corresponding requirement under the provisions of this part.

§ 111.2 Responsibility (Rule 2).

(a) Nothing in this part shall exonerate any vessel, or the owner, master or crew thereof, from the consequences of any neglect to comply with these Rules or of the neglect of any precaution which may be required by the ordinary practice of seamen, or by the special circumstances of the case.

(b) In construing and complying with this part due regard shall be had to all dangers of navigation and collision and to any special circumstance, including the limitations of the vessels involved, which may make a departure from this part necessary to avoid immediate danger.

§ 111.3 General definitions (Rule 3).

For the purpose of this part, except where the context otherwise requires:

(a) The word *vessel* includes every description of water craft, including non-displacement craft and seaplanes, used or capable of being used as a means of transportation on water.

(b) The term *power-driven vessel* means any vessel propelled by machinery.

(c) The term *sailing vessel* means any vessel under sail provided that propelling machinery, if fitted, is not being used.

(d) The term *vessel engaged in fishing* means any vessel fishing with nets, lines, trawls or other fishing apparatus which restrict maneuverability, but does not include a vessel fishing with trolling lines or other fishing apparatus which do not restrict maneuverability.

(e) The word *seaplane* includes any aircraft designed to maneuver on the water.

(f) The term *vessel not under command* means a vessel which through some exceptional circumstance is unable to maneuver as required by this part and is therefore unable to keep out of the way of another vessel.

(g) The term *vessel restricted in her ability to maneuver* means a vessel which from the nature of her work is restricted in her ability to maneuver as required by this part and is therefore unable to keep out of the way of another vessel. The term *vessels restricted in their ability to manuever* shall include but not be limited to:

(1) A vessel engaged in laying, servicing or picking up a navigation mark, submarine cable or pipeline;

(2) A vessel engaged in dredging, surveying or underwater operations;

(3) A vessel engaged in a towing operation such as severely restricts the towing vessel and her tow in their ability to deviate from their course.

(h) The word *under way* means that a vessel is not at anchor, or made fast to the shore, or aground.

(i) The words *length* and *breadth* of a vessel means her length overall and greatest breadth.

(j) Vessels shall be deemed to be in sight of one another only when one can be observed visually from the other.

(k) The term *restricted visibility* means any condition in which visibility is restricted by fog, mist, heavy rainstorms or any other similar causes.

(l) A *motorboat* means a power-driven vessel no more than 20 meters in length as measured from end to end over the deck.

Subpart B—Steering and Sailing Rules

CONDUCT OF VESSELS IN ANY CONDITION OF VISIBILITY

§ 111.4 Application (Rule 4).

Sections 111.5 through 111.10 apply in any condition of visibility.

§ 111.5 Lookout (Rule 5).

Every vessel shall at all times while under way in the Canal and adjacent waters maintain a proper lookout by sight and hearing as well as by all available means appropriate in the prevailing circumstances and conditions so as to make a full appraisal of the situation and of the risk of collision. The person acting as lookout shall have no other assigned duties and shall report promptly all relevant and material information to the person in charge of the navigation of the vessel.

§ 111.6 Safe speed (Rule 6).

Every vessel shall at all times proceed at a safe speed so that she can take proper and effective action to avoid collision and be stopped within a distance appropriate to the prevailing circumstances and conditions. In determining a safe speed the following factors shall be among those taken into account:

(a) By all vessels:

(1) The state of visibility;

(2) The traffic density including concentrations of small craft or any other vessels;

(3) The maneuverability of the vessel with special reference to stopping distance and turning ability in the prevailing conditions;

(4) At night the presence of background light such as from shore lights or from back scatter of her own lights;

(5) The state of wind, sea and current, and the proximity of navigational hazards;

(6) The draft in relation to the available depth of water.

(b) Additionally, by vessels with operational radar:

(1) The characteristics, efficiency and limitations of the radar equipment;

(2) Any constraints imposed by the radar range scale in use;

(3) The effect on radar detection of the sea state, weather and other sources of interference;

(4) The possibility that small vessels and other floating objects may not be detected by radar at an adequate range;

(5) The number, location and movement of vessels detected by radar;

(6) The more exact assessment of the visibility that may be possible when radar is used to determine the range of vessel or other objects in the vicinity.

(c) A vessel shall not exceed the speeds designated below, except in an emergency:

	Knots
Atlantic entrance to Gatun Locks	12
Gatun Lake in a 1,000-ft. channel	18
Gatun Lake in a 800-ft. channel	15
Gatun Lake in a 650-ft. channel	12
When rounding Buoy No. 17 in Gatun Reach northbound	10
Gaillard Cut, in the straight reaches	8
Gamboa: When passing reserve fleet basin, concrete dock, or floating crane berth; and when entering Gaillard Cut	6
When using a tug astern	6
Miraflores Locks to Buoy No. 14	6
Buoy No. 14 to Pacific entrance	12

(d) A vessel in Panama Canal waters at locations other than those specified in paragraph (c) of this section, including Gatun Anchorage, Bohio Bend, Mamei Curve, Miraflores Lake, and in or near the locks, shall not exceed a speed that is safe under the existing circumstances and conditions, except in an emergency.

(e) Whenever a vessel is maneuvering in an area where paragraph (c) of this section limits the speed to 6 knots, and the vessel's speed at dead slow ahead exceeds 6 knots, she is permitted to proceed at the slowest speed possible required to safely maintain manueverability.

(f) The Canal Operations Captain may authorize departures from the maximum speeds established by paragraph (c) of this section in the case of

particular vessels whose handling characteristics are such as to indicate that a higher speed or speeds can be prudently allowed.

(g) Paragraph (c) of this section does not apply to motorboats or to vessels of the Panama Canal Commission. Nevertheless, motorboats and vessels of the Panama Canal Commission when underway shall proceed at a speed which is reasonable under the circumstances and conditions and which does not create a hazard to life or property.

[48 FR 52704, Nov. 22, 1983, as amended at 55 FR 11909, Mar. 30, 1990]

§111.7 Risk of collision (Rule 7).

(a) Every vessel shall use all available means appropriate to the prevailing circumstances and conditions to determine if risk of collision exists. If there is any doubt, such risk shall be deemed to exist.

(b) Proper use shall be made of radar equipment if fitted and operational.

(c) Assumptions shall not be made on the basis of scanty information, especially scanty radar information.

(d) In determining if risk of collision exists the following considerations shall be among those taken into account:

(1) Such risk shall be deemed to exist if the compass bearing of an approaching vessel does not appreciably change;

(2) Such risk may sometimes exist even when an appreciable bearing change is evident, particularly when approaching a very large vessel or a tow or when approaching a vessel at close range.

§111.8 Action to avoid collision (Rule 8).

(a) Any action taken to avoid collision shall, if the circumstances of the case admit, be positive, made in ample time and with due regard to the observance of good seamanship.

(b) Any alteration of course or speed to avoid collision shall, if the circumstances of the case admit, be large enough to be readily apparent to another vessel observing visually or by radar; a succession of small alterations of course or speed should be avoided.

(c) If there is sufficient sea room, alteration of course alone may be the most effective action to avoid a close-quarters situation provided that it is made in good time, is substantial and does not result in another close-quarters situation.

(d) Action taken to avoid collision with another vessel shall be such as to result in passing at a safe distance. The effectiveness of the action shall be carefully checked until the other vessel is finally past and clear.

(e) If necessary to avoid collision or allow more time to assess the situation, a vessel shall slacken her speed or take all way off by stopping or reversing her means of propulsion.

(f) When two vessels are proceeding in such directions as to involve risk of collision, a power-driven vessel or sailing vessel or motorboat that is entering or preparing to enter the main channel of the Canal from either side shall not cross the bow of a vessel proceeding in either direction along the Canal axis and shall keep clear until the vessel proceeding along the Canal axis has passed.

§111.9 Narrow channels (Rule 9).

(a) A vessel proceeding along the course of a narrow channel or fairway shall keep as near to the outer limit of the channel or fairway which lies on her starboard side as is safe and practicable.

(b) A vessel of less than 20 meters in length or a sailing vessel shall not impede the passage of a vessel which can safely navigate only within a narrow channel or fairway.

(c) A vessel engaged in fishing shall not impede the passage of any other vessel navigating within a narrow channel or fairway.

(d) A vessel shall not cross a narrow channel or fairway if such crossing impedes the passage of a vessel which can safely navigate only within such channel or fairway. The latter vessel shall use the danger signal prescribed in §111.34(d) (Rule 34(d)) if in doubt as to the intention of the crossing vessel.

(e)(1) In a narrow channel or fairway when overtaking, the vessel intending to overtake shall indicate her intention by sounding the appropriate signal prescribed in §111.34(c) (Rule 34(c)). The overtaken vessel, if in agreement, shall sound the same signal. If in doubt she

shall sound the danger signal prescribed in § 111.34(d) (Rule 34(d)).

(2) This section does not relieve the overtaking vessel of her obligation under § 111.13 (Rule 13).

(f) A vessel nearing a bend or an area of a narrow channel or fairway where other vessels may be obscured by an intervening obstruction shall navigate with particular alertness and caution.

(g) Any vessel shall, if the circumstances of the case admit, avoid anchoring in a narrow channel.

(h) When two power-driven vessels are meeting end on, or nearly end on, in the Canal in the vicinity of an obstruction, e.g., a dredge, drill barge, slide, etc., the vessel whose side of the Canal is clear shall have the right-of-way and the other vessel shall hold back and keep out of the way until the privileged vessel is clear.

§ 111.10 [Reserved] (Rule 10).

CONDUCT OF VESSELS IN SIGHT OF ONE ANOTHER

§ 111.11 Application (Rule 11).

Sections 111.12 through 111.18 apply to vessels in sight of one another.

§ 111.12 Sailing vessels (Rule 12).

(a) When two sailing vessels are approaching one another, so as to involve risk of collision, one of them shall keep out of the way of the other as follows:

(1) When each has the wind on a different side, the vessel which has the wind on the port side shall keep out of the way of the other;

(2) When both have the wind on the same side, the vessel which is to windward shall keep out of the way of the vessel which is to leeward;

(3) If a vessel with the wind on the port side sees a vessel to windward and cannot determine with certainty whether the other vessel has the wind on the port or on the starboard side, she shall keep out of the way of the other.

(b) For the purpose of this section the windward side shall be deemed to be the side opposite to that on which the mainsail is carried or, in the case of a square-rigged vessel, the side opposite to that on which the largest fore-and-aft sail is carried.

§ 111.13 Overtaking (Rule 13).

(a) Notwithstanding anything contained in §§ 111.4 through 111.18, any vessel overtaking any other shall keep out of the way of the overtaken vessel, except that within the Canal channel all pleasure vessels and craft, even though they are an overtaken vessel, shall keep out of the way of transiting vessels and Panama Canal Commission floating equipment.

(b) A vessel shall be deemed to be overtaking when coming up with another vessel from a direction more than 22.5 degrees abaft her beam, that is, in such a position with reference to the vessel she is overtaking, that at night she would be able to see only the sternlight of that vessel but neither of her sidelights.

(c) When a vessel is in any doubt as to whether she is overtaking another, she shall assume that this is the case and act accordingly.

(d) Any subsequent alteration of the bearing between the two vessels shall not make the overtaking vessel a crossing vessel within the meaning of this part or relieve her of the duty of keeping clear of the overtaken vessel until she is finally past and clear.

(e) Except as specially authorized by the Canal Operations Captain or his designee, an overtaking power-driven vessel shall not overtake and pass another power-driven vessel in Gaillard Cut, Mamei Curve or Bohio Bend between buoys 38 and 40: *Provided, however,* That this paragraph shall not apply where either the overtaking or the overtaken vessel is less than 150 feet in length or is a Panama Canal Commission power-driven vessel or a U.S. Army or U.S. Navy local tug, with or without a tow.

[48 FR 52704, Nov. 22, 1983, as amended at 55 FR 11909, Mar. 30, 1990]

§ 111.14 Head-on situation (Rule 14).

(a) When two power-driven vessels are meeting on reciprocal or nearly reciprocal courses so as to involve risk of collision each shall alter her course to starboard so that each shall pass on the port side of the other.

(b) Such a situation shall be deemed to exist when a vessel sees the other ahead or nearly ahead and by night she

could see the masthead lights of the other in a line or nearly in a line or both sidelights and by day she observes the corresponding aspect of the other vessel.

(c) When a vessel is in any doubt as to whether such a situation exists she shall assume that it does exist and act accordingly.

(d) In the Canal channel every power-driven vessel encountering another vessel while proceeding along the line of the channel, shall keep to that side of the fairway or mid-channel which lies on its starboard side. When two such vessels so proceeding are bound in opposite directions, they shall, when it is safe and practicable, be governed by paragraph (a) of this section even when, by reason of an intervening bend in the channel, their headings are not substantially opposite when they first sight each other; and neither of them shall alter course to port across the course of the other. Tugs and motorboats shall, whenever practicable, keep well over to that side of the Canal which is to their starboard when large vessels are passing.

§111.15 Crossing situation (Rule 15).

When two power-driven vessels are crossing so as to involve risk of collision, the vessel which has the other on her own starboard side shall keep out of the way and shall, if the circumstances of the case admit, avoid crossing ahead of the other vessel.

§111.16 Action by give-way vessel (Rule 16).

Every vessel which is directed to keep out of the way of another vessel shall, so far as possible, take early and substantial action to keep well clear.

§111.17 Action by stand-on vessel (Rule 17).

(a)(1) Where one of two vessels is to keep out of the way the other shall keep her course and speed.

(2) The latter vessel may however take action to avoid collision by her maneuver alone, as soon as it becomes apparent to her that the vessel required to keep out of the way is not taking appropriate action in compliance with this part.

(b) When, from any cause, the vessel required to keep her course and speed finds herself so close that collision cannot be avoided by the action of the give-way vessel alone, she shall take such action as will best aid to avoid collision.

(c) A power-driven vessel which takes action in a crossing situation in accordance with paragraph (a)(2) of this section to avoid collision with another power-driven vessel shall, if the circumstances of the case admit, not alter course to port for a vessel on her own port side.

(d) This section does not relieve the give-way vessel of her obligation to keep out of the way.

§111.18 Responsibilities between vessels (Rule 18).

Except where §§111.9 and 111.13 (Rules 9 and 13) otherwise require:

(a) A power-driven vessel underway shall keep out of the way of:

(1) A vessel not under command;

(2) A vessel restricted in her ability to maneuver.

(b) A sailing vessel underway shall keep out of the way of:

(1) A vessel not under command;

(2) A vessel restricted in her ability to maneuver;

(3) A power driven vessel, except a motorboat.

(c) A seaplane on the water shall, in general, keep well clear of all vessels and avoid impeding their navigation. In circumstances, however, where risk of collision exists, she shall comply with the §§111.4 through 111.18 of this subpart.

(d) Panama Canal floating equipment at work in a stationary position shall have a privileged right to such position, and no passing vessel shall foul such equipment or its moorings, or pass at such speed as to create a dangerous wash or wake. Floating equipment of the Canal from which divers are working, and floating equipment so moored, and vessels under repair and in such condition, that a high wash might cause swampage or be hazardous to the workmen, shall be passed by all vessels at a speed sufficiently slow as not to create a dangerous wash or wake.

CONDUCT OF VESSELS IN RESTRICTED VISIBILITY

§ 111.19 Conduct of vessels in restricted visibility (Rule 19).

(a) This section applies to vessels not in sight of one another when navigating in or near an area of restricted visibility.

(b) Every vessel shall proceed at a safe speed adapted to the prevailing circumstances and conditions of restricted visibility. A power-driven vessel shall have her engines ready for immediate maneuver.

(c) Every vessel shall have due regard to the prevailing circumstances and conditions of restricted visibility when complying with the §§ 111.4 through 111.9 (Rules 4 through 9) of this subpart.

(d) A vessel which detects by radar alone the presence of another vessel shall determine if a close-quarters situation is developing or risk of collision exists. If so, she shall take avoiding action in ample time, provided that when such action consists of an alteration of course, so far as possible the following shall be avoided:

(1) An alteration of course to port for a vessel forward of the beam, other than for a vessel being overtaken; and

(2) An alteration of course towards a vessel abeam or abaft the beam.

(e) Except where it has been determined that a risk of collision does not exist, every vessel which hears apparently forward of her beam the fog signal of another vessel, or which cannot avoid a close quarters situation with another vessel forward of her beam, shall reduce her speed to the minimum at which she can be kept on her course. She shall if necessary take all her way off and in any event navigate with extreme caution until danger of collision is over.

(f) Except as provided in paragraph (g) of this section, vessels moored or at anchor shall not get underway when, because of atmospheric conditions, visibility is less than 1,000 feet and vessels underway in such conditions shall anchor or moor as soon as practicable and report immediately to the Canal Operations Captain, or his designee by radio or other available means.

(g) Vessels specially equipped to navigate under conditions restricting visibility and which have a pilot aboard, and vessels which have a pilot aboard and which are assisted by Panama Canal Commission vessels which are specially equipped to navigate under such conditions, may, at the discretion of the Canal Operations Captain or his designee, be navigated when visibility is less than 1,000 feet.

[48 FR 52704, Nov. 22, 1983, as amended at 55 FR 11909, Mar. 30, 1990]

Subpart C—Lights and Shapes

§ 111.20 Application (Rule 20).

(a) Sections 111.20 through 111.31 (Rules 20–31) in this subpart shall be complied with in all weathers.

(b) The regulations concerning lights shall be complied with from sunset to sunrise, and during such times no other lights shall be exhibited, except such lights as cannot be mistaken for the lights specified in this part or do not impair their visibility or distinctive character, or interfere with the keeping of a proper lookout.

(c) The lights prescribed by this part shall, if carried, also be exhibited from sunrise to sunset in restricted visibility and may be exhibited in all other circumstances when it is deemed necessary.

(d) The regulations concerning shapes shall be complied with by day.

(e) The lights and shapes specified in this part shall comply with the provisions of Annex I to the 72 COLREGS.

§ 111.21 Definitions (Rule 21).

(a) *Masthead light* means a white light placed over the fore and aft centerline of the vessel showing an unbroken light over an arc of the horizon of 225 degrees and so fixed as to show the light from right ahead to 22.5 degrees abaft the beam on either side of the vessel.

(b) *Sidelights* means a green light on the starboard side and a red light on the port side each showing an unbroken light over an arc of the horizon of 112.5 degrees and so fixed as to show the light from right ahead to 22.5 degrees abaft the beam on its respective side. In a vessel of less than 20 meters

in length the sidelights may be combined in one lantern carried on the fore and aft centerline of the vessel.

(c) *Sternlight* means a white light placed as nearly as practicable at the stern showing an unbroken light over an arc of the horizon of 135 degrees and so fixed as to show the light 67.5 degrees from right aft on each side of the vessel.

(d) *Towing light* means a yellow light having the same characteristics as the *sternlight* defined in paragraph (c) of this section.

(e) *All-round light* means a light showing an unbroken light over an arc of the horizon of 360 degrees.

(f) *Flashing light* means a light flashing at regular intervals at a frequency of 120 flashes or more per minute.

§ 111.22 Visibility of lights (Rule 22).

The lights prescribed in this part shall have an intensity as specified in section 8 of Annex I to 72 COLREGS so as to be visible at the following minimum ranges:

(a) In vessels of 50 meters or more in length:

(1) A masthead light, 6 miles;

(2) A sidelight, 3 miles;

(3) A sternlight, 3 miles;

(4) A towing light, 3 miles;

(5) A white, red, green or yelow all-round light, 3 miles.

(b) In vessels of 12 meters or more in length but less than 50 meters in length:

(1) A masthead light, 5 miles; except that where the length of the vessel is less than 20 meters, 3 miles;

(2) A sidelight, 2 miles.

(3) A sternlight, 2 miles;

(4) A towing light, 2 miles;

(5) A white, red, green or yellow all-round light, 2 miles.

(c) In vessels of less than 12 meters in length:

(1) A masthead light, 2 miles;

(2) A sidelight, 1 mile;

(3) A sternlight, 2 miles;

(4) A towing light, 2 miles;

(5) A white, red, green or yellow all-round light, 2 miles.

(d) In inconspicuous, party submerged vessels or objects being towed:

(1) A white all-round light, 3 miles.

§ 111.23 Power-driven vessels under way (Rule 23).

(a) A power-driven vessel under way shall exhibit:

(1) A masthead light forward;

(2) A second masthead light abaft of and higher than the foward one; except that a vessel of less than 50 meters in length shall not be obliged to exhibit such light but may do so;

(3) Sidelights; and

(4) A sternlight.

(b) An air-cushion vessel when operating in the non-displacement mode shall, in addition to the lights prescibed in paragraph (a) of this section, exhibit an all-round flashing yellow light.

(c)(1) A power-driven vessel of less than 12 meters in length may in lieu of the lights prescribed in paragraph (a) of this section exhibit an all-round white light and sidelights;

(2) A power-driven vessel of less than 7 meters in length and whose maximum speed does not exceed 7 knots may, in lieu of the lights prescribed in paragraph (a) of this section, exhibit an all-round white light, and shall, if practicable, also exhibit sidelights;

(3) The masthead light or all-round white light on a power-driven vessel of less than 12 meters in length may be displaced from the fore and aft centerline of the vessel if centerline fitting is not practicable, provided that the sidelights are combined in one lantern which shall be carried on the fore and aft centerline of the vessel or located as nearly as practicable in the same fore and aft line as the masthead light or the all-round white light.

(d) A vessel employed in the transportation or transfer of flammable, explosive, toxic, or radioactive commodities shall carry, in addition to her appropriate mooring, anchor, or navigation lights, where it can best be seen, a red light of such a character as to be visible all around the horizon at a distance of at least 2 miles. By day she shall display, where it can best be seen, a red flag if the cargo includes flammable or explosive commodities and the international single flag hoist signal ''T'' if the commodity is toxic or radioactive only.

[48 FR 52704, Nov. 22, 1983, as amended at 50 FR 19679, May 10, 1985]

§ 111.24 Towing and pushing (Rule 24).

(a) A power-driven vessel when towing shall exhibit:

(1) Instead of the light prescribed in § 111.23(a)(1) or § 111.23(a)(2), two masthead lights in a vertical line. When the length of the tow, measuring from the stern of the towing vessel to the after end of the tow exceeds 200 meters; three such lights in a vertical line;

(2) Sidelights;

(3) A sternlight;

(4) A towing light in a vertical line above the sternlight; and

(5) When the length of the tow exceeds 200 meters, a diamond shape where it can best be seen.

(b) When a pushing vessel and a vessel being pushed ahead are rigidly connected in a composite unit they shall be regarded as a power-driven vessel and exhibit the lights prescribed in § 111.23 (Rule 23).

(c) A power-driven vessel when pushing ahead or towing alongside, except in the case of a composite unit, shall exhibit:

(1) Instead of the light prescribed in § 111.23(a)(1) or § 111.23(a)(2) (Rule 23(a)(1) or (a)(2), two masthead lights in a vertical line;

(2) Sidelights; and

(3) A sternlight.

(d) A power-driven vessel to which paragraph (a) or (c) of this section apply shall also comply with § 111.23(a)(2) (Rule 23(a)(2)).

(e) A vessel or object being towed, other than those mentioned in paragraph (g) of this section, shall exhibit:

(1) Sidelights;

(2) A sternlight; and

(3) When the length of the two exceeds 200 meters, a diamond shape where it can best be seen.

(f) Provided that any number of vessels being towed alongside or pushed in a group shall be lighted as one vessel;

(1) A vessel being pushed ahead, not being part of a composite unit, shall exhibit at the forward end, sidelights;

(2) A vessel being towed alongside shall exhibit a sternlight and at the forward end, sidelights.

(g) An inconspicuous, partly submerged vessel or object, or combination of such vessels or objects being towed, shall exhibit:

(1) If it is less than 25 meters in breadth, one all-round white light at or near the forward end and one at or near the after end except that dracones need not exhibit a light at or near the forward end;

(2) If it is 25 meters or more in breadth, two additional all-round white lights at or near the extremities of its breadth:

(3) If it exceeds 100 meters in length, additional all-round white lights between the lights prescribed in paragraphs (g)(1) and (2) of this section so that the distance between the lights shall not exceed 100 meters;

(4) A diamond shape at or near the aftermost extremity of the last vessel or object being towed and if the length of the tow exceeds 200 meters an additional diamond shape where it can best be seen and located as far forward as is practicable.

(h) Where from any sufficient cause it is impracticable for a vessel or object being towed to exhibit the lights or shapes prescribed in paragraph (e) or (g) of this section, all possible measures shall be taken to light the vessel or object towed or at least to indicate the presence of the unlighted vessel or object.

(i) Where from any sufficient cause it is impracticable for a vessel not normally engaged in towing operations to display the lights prescribed in paragraph (a) or (c) of this section, such vessel shall not be required to exhibit those lights when engaged in towing another vessel in distress or otherwise in need of assistance. All possible measures shall be taken to indicate the nature of the relationship between the towing vessel and the vessel being towed as authorized by § 111.36 (Rule 36), in particular by illuminating the towline.

§ 111.25 Sailing vessels under way and vessels under oars (Rule 25).

(a) A sailing vessel under way shall exhibit:

(1) Sidelights; and

(2) A sternlight.

(b) In a sailing vessel of less than 20 meters in length the lights prescribed in paragraph (a) of this section may be combined in one lantern carried at or

near the top of the mast where it can best be seen.

(c) A sailing vessel under way may, in addition to the lights prescribed in paragraph (a) of this section, exhibit at or near the top of the mast, where they can best be seen, two all-round lights in a vertical line, the upper being red and the lower green, but these lights shall not be exhibited in conjunction with the combined lantern permitted by paragraph (b) of this section.

(d)(1) A sailing vessel of less than 7 meters in length shall, if practicable, exhibit the lights prescribed in paragraph (a) or (b) of this section, but if she does not, she shall have ready at hand an electric torch or lighted lantern showing a white light which shall be exhibited in sufficient time to prevent collision.

(2) A vessel under oars may exhibit the lights prescribed in this section for sailing vessels, but if she does not, she shall have ready at hand an electric torch or lighted lantern showing a white light which shall be exhibited in sufficient time to prevent collision.

(e) A vessel proceeding under sail when also being propelled by machinery shall exhibit forward were it can best be seen a conical shape, apex downwards.

§111.26 Fishing vessels (Rule 26).

Vessels engaged in fishing, as defined in §111.3 (d) (Rule 3 (d)) of this part, shall stay well clear of the navigable waters of the Canal Operating Areas.

§111.27 Vessels not under command or restricted in their ability to maneuver (Rule 27).

(a) A vessel not under command shall exhibit:

(1) Two all-round red lights in a vertical line where they can best be seen:

(2) Two balls or similar shapes in a vertical line where they can best be seen;

(3) When making way through the water, in addition to the lights prescribed in this paragraph, sidelights and a sternlight.

(b) A vessel restricted in her ability to maneuver shall exhibit:

(1) Three all-round lights in a vertical line where they can best be seen. The highest and lowest of these lights shall be red and the middle light shall be white;

(2) Three shapes in a vertical line where they can best be seen. The highest and lowest of these shapes shall be balls and the middle one a diamond;

(3) When making way through the water, masthead light or lights, sidelights and a sternlight, in addition to the lights prescribed in paragraph (b)(1) of this section;

(4) When at anchor, in addition to the lights or shapes prescribed in paragraphs (b)(1) and (2) of this section, the lights or shapes prescribed in §111.30 (Rule 30).

(c) A vessel engaged in a towing operation such as severely restricts the towing vessel and her tow in their ability to deviate from her course shall, in addition to the lights or shapes prescribed in §111.24 (a) (Rule 24 (a)), exhibit the lights or shape prescribed in paragraphs (b)(1) and (2) of this section.

(d) A vessel engaged in dredging or underwater operations, when restricted in her ability to maneuver, shall exhibit the lights and shapes prescribed in paragraphs (b)(1), (2) and (3) of this section and shall in addition, when an obstruction exists, exhibit:

(1) Two all-round red lights or two balls in a vertical line to indicate the side on which the obstruction exists;

(2) Two all-round green lights or two diamonds on a vertical line to indicate the side in which another vessel may pass;

(3) When at anchor, the lights or shapes prescribed in this paragraph instead of the lights or shape prescribed in §111.30 (Rule 30).

(e) Whenever the size of a vessel engaged in diving operations makes it impracticable to exhibit all lights and shapes prescribed by paragraph (d) of this section, the lights and shapes prescribed by §111.38 shall be exhibited.

(f) Vessels of less than 12 meters in length, except those engaged in diving operations, shall not be required to exhibit the lights or shapes prescribed in this section.

(g) The signals prescribed in this section are not signals of vessels in distress and requiring assistance. Such

signals are contained in § 111.37 (Rule 37).

[48 FR 52704, Nov. 22, 1983, as amended at 49 FR 30466, July 31, 1984]

§ 111.28 [Reserved] (Rule 28).

§ 111.29 Pilot vessels (Rule 29).

(a) A vessel engaged on pilotage duty shall exhibit:

(1) At or near the masthead, two all-round lights in a vertical line, the upper being white and the lower red;

(2) When under way, in addition, sidelights and a sternlight;

(3) When at anchor, in addition to the lights prescribed in paragraph (a)(1) of this section, the light, lights or shape prescribed in § 111.30 (Rule 30) for vessels at anchor.

(b) A pilot vessel when not engaged on pilotage duty shall exhibit the lights or shapes prescribed for a similar vessel of her length.

§ 111.30 Anchored vessels and vessels aground (Rule 30).

(a) A vessel at anchor shall exhibit where it can best be seen:

(1) In the fore part, an all-round white light or one ball;

(2) At or near the stern and at a lower level than the light prescribed in paragraph (a)(1) of this section, an all-round white light.

(b) A vessel of less than 50 meters in length may exhibit an all-round white light where it can best be seen instead of the lights prescribed in paragraph (a) of this section.

(c) A vessel at anchor may, and a vessel of 100 meters and more in length shall, also use the available working or equivalent lights to illuminate her decks.

(d) A vessel aground shall exhibit the lights prescribed in paragraph (a) or (b) of this section and in addition, where they can best be seen:

(1) Two all-round red lights in a vertical line; and

(2) Three balls in a vertical line.

(e) A vessel of less than 7 meters in length, when at anchor, not in or near a narrow channel, fairway or anchorage, or where other vessels normally navigate, shall not be required to exhibit the lights or shape prescribed in paragraphs (a) and (b) of this section.

(f) A vessel of less than 20 meters in length, when aground, shall not be required to exhibit the lights or shapes prescribed in paragraphs (d)(1) and (2) of this section.

(g) Vessels not more than 20 meters in length, when at anchor in any special anchorage designated by the Commission for such vessels, shall not be required to carry or exhibit the lights or shape specified in paragraph (a) of this section.

§ 111.31 Seaplanes (Rule 31).

Where it is impracticable for a seaplane to exhibit lights and shapes of the characteristics or in the positions prescribed in the sections of this Subpart she shall exhibit lights and shapes as closely similar in characteristics and position as is possible.

Subpart D—Sound and Light Signals

§ 111.32 Definitions (Rule 32).

(a) The word *whistle* means any sound signaling appliance capable of producing the prescribed blasts and which complies with the specifications in Annex III to the 72 COLREGS.

(b) The term *short blast* means a blast of about one second's duration.

(c) The term *prolonged blast* means a blast of from four to six seconds' duration.

§ 111.33 Equipment for sound signals (Rule 33).

(a) A vessel of 12 meters or more in length shall be provided with a whisle and a bell and a vessel of 100 meters or more in length shall, in addition, be provided with a gong, the tone and sound of which cannot be confused with that of the bell. The whistle, bell and gong shall comply with the specifications in Annex III to the 72 COLREGS. The bell or gong or both may be replaced by other equipment having the same respective sound characteristics, provided that manual sounding of the prescribed signals shall always be possible.

(b) A vessel of less than 12 meters in length shall not be obliged to carry the sound signaling appliances prescribed in paragraph (a) of this section but if she does not, she shall be provided with

some other means of making an efficient sound signal.

§111.34 Maneuvering and warning signals (Rule 34).

(a) When power-driven vessels are in sight of one another and meeting or crossing at a distance within half a mile of each other, each vessel under way, when maneuvering as authorized or required by this part:

(1) Shall indicate that manuever by the following signals on her whistle: One short blast to mean ''I intend to leave you on my port side''; two short blasts to mean ''I intend to leave you on my starboard side''; and three short blasts to mean ''I am operating astern propulsion'';

(2) Upon hearing the one or two blast signal of the other shall, if in agreement, sound the same whistle signal and take the steps necessary to effect a safe passing. If, however, from any cause, the vessel doubts the safety of the proposed maneuver, she shall sound the danger signal specified in paragraph (d) of this section and each vessel shall take appropriate precautionary action until a safe passing agreement is made.

(b) A vessel may supplement the whistle signals prescribed in paragraph (a) of this section by light signals:

(1) These signals shall have the following significance: one flash to mean ''I intend to leave you on my port side''; two flashes to mean ''I intend to leave you on my starboard side''; three flashes to mean ''I am operating astern propulsion'';

(2) The duration of each flash shall be about one second, the interval between flashes shall be about one second, and the interval between successive signals shall be not less than ten seconds;

(3) The light used for this signal shall, if fitted, be an all-round white light, visible at a minimum range of 5 miles, and shall comply with the provisions of Annex I of the 72 COLREGS.

(c) When in sight of one another:

(1) A power-driven vessel intending to overtake another power-driven vessel shall indicate her intention by the following signals on her whistle: one short blast to mean ''I intend to overtake you on your starboard side''; two short blasts to mean ''I intend to overtake you on your port side''; and

(2) The power-driven vessel about to be overtaken shall, if in agreement, sound a similar sound signal. If in doubt she shall sound the danger signal prescribed in paragraph (d) of this section.

(d) When vessels in sight of one another are approaching each other and from any cause either vessel fails to understand the intentions or actions of the other, or is in doubt whether sufficient action is being taken by the other to avoid collision, the vessel in doubt shall immediately indicate such doubt by giving at least five short and rapid blasts on the whistle. This signal may be supplemented by a light signal of at least five short and rapid flashes.

(e) If whistles are fitted on a vessel at a distance apart of more than 100 meters, one whistle only shall be used for giving maneuvering and warning signals.

(f) When a power-driven vessel is leaving a dock or berth, she shall sound one prolonged blast.

(g) A vessel that reaches agreement with another vessel in a meeting, crossing or overtaking situation by using radiotelephone on the customary frequencies is not obliged to sound whistel signals prescribed by this section, but may do so. If agreement is not reached, then whistle signals shall be exchanged in a timely manner and shall prevail.

(h) When a power-driven vessel or motorboat is approaching a pipeline obstrucing the channel, and desires to pass through the gate, she shall give a signal of two blasts, namely, one polonged blast followed by a short blast, which signal shall be promptly answered by the gate tender with the same signal if she is ready to have the approaching vessel pass or by the danger signal if it is not safe for her to pass. In no case shall the approaching vessel attempt to pass until the gate tender signifies by a signal of one prolonged and one short blast that the channel is open. The gate tender shall so signify as soon as practicable, and the approaching vessel shall answer with a similar signal.

§ 111.35 Sound signals in restricted visibility (Rule 35).

In or near an area of restricted visibility, whether by day or night, the signals prescribed in this section shall be used as follows:

(a) A power-driven vessel making way through the water shall sound at intervals of not more than 2 minutes one prolonged blast.

(b) A power-driven vessel under way but stopped and making no way through the water shall sound at intervals of not more than 2 minutes two prolonged blasts in succession with an interval of about 2 seconds between them.

(c) A vessel not under command, a vessel restricted in her ability to maneuver, a sailing vessel and a vessel engaged in towing or pushing another vessel shall, instead of the signals prescribed in paragraph (a) or (b) of this section, sound at intervals of not more than 2 minutes three blasts in succession, namely one prolonged followed by two short blasts.

(d) A vessel restricted in her ability to maneuver when carring out her work at anchor, shall instead of the signals prescribed in paragraph (g) of this section sound the signal prescribed in paragraph (c) of this section.

(e) A vessel towed or if more than one vessel is towed the last vessel of the tow, if manned, shall at intervals of not more than 2 minutes sound four blasts in succession, namely one prolonged followed by three short blasts. When practicable, this signal shall be made immediately after the signal made by the towing vessel.

(f) When a pushing vessel and a vessel being pushed ahead are rigidly connected in a composite unit they shall be regarded as a power-driven vessel and shall give the signals prescribed in paragraph (a) or (b) of this section.

(g) A vessel at anchor shall at intervals of not more than one minute ring the bell rapidly for about 5 seconds. In a vessel of 100 meters or more in length the bell shall be sounded in the forepart of the vessel and immediately after the ringing of the bell the gong shall be sounded rapidly for about 5 seconds in the after part of the vessel. A vessel at anchor may in addition sound three blasts in succession, namely one short, one prolonged and one short blast, to give warning of her position and of the possibility of collision to an approaching vessel.

(h) A vessel aground shall give the bell signal and if required the gong signal prescribed in paragraph (g) of this section and shall, in addition, give three separate and distinct strokes on the bell immediately before and after the rapid ringing of the bell. A vessel aground may in addition sound an appropriate whistle signal.

(i) A vessel of less than 12 meters in length shall not be obliged to give the above-mentioned signals, but, if she does not, shall make some other efficient sound signal at intervals of not more than 2 minutes.

(j) A pilot vessel when engaged on pilotage duty may in addition to the signals prescribed in paragraphs (a), (b) or (g) of this section sound an identity signal consisting of four short blasts.

§ 111.36 Signals to attract attention (Rule 36).

(a) If necessary to attract the attention of another vessel, any vessel may make light or sound signals that cannot be mistaken for any signal authorized elsewhere in this part, or may direct the beam of her searchlight in the direction of the danger, in such a way as not to embarrass any vessel. Any light to attract attention of another vessel shall be such that it cannot be mistaken for any aid to navigation. For the purpose of this section the use of high intensity intermittent or revolving lights, such as strobe lights, shall be avoided.

(b) Under no circumstances shall the rays of a searchlight or any other type of blinding light be directed into the pilot house, or in any other manner or direction which would interfere with the navigation of another vessel.

§ 111.37 Distress signals (Rule 37).

(a) Need of assistance. The following signals used or exhibited either together or separately, indicate distress and need of assistance:

(1) A gun or other explosive signal fired at intervals of about a minute;

(2) A continuous sounding with any fog-signaling apparatus;

(3) Rockets or shells, throwing red stars fired one at a time at short intervals;

(4) A signal made by radiotelegraphy or by any other signaling method consisting of the group . . . --- . . . (SOS) in the Morse Code;

(5) A signal sent by radiotelephony consisting of the spoken word ''mayday'';

(6) The International Code Signal of distress indicated by N.C.;

(7) A signal consisting of a square flag having above or below it a ball or anything resembling a ball;

(8) Flames on the vessel (as from a burning tar barrel, oil barrel, etc.);

(9) A rocket parachute flare or a hand flare showing a red light;

(10) A smoke signal giving off orange-colored smoke;

(11) Slowly and repeatedly raising and lowering arms outstretched to each side;

(12) The radiotelegraph alarm signal;

(13) The radiotelephone alarm signal;

(14) Signals transmitted by emergency position-indicating radio beacons.

(b) The use of exhibition of any of the foregoing signals except for the purpose of indicating distress and need of assistance and the use of other signals which may be confused with any of the above signals is prohibited.

(c) Attention is drawn to the relevant sections of the International Code of Signals, the Merchant Ship Search and Rescue Manual and the following signals:

(1) A piece of orange-colored canvas with either a black square and circle or other appropriate symbol (for identification from the air);

(2) A dye marker.

[48 FR 52704, Nov. 22, 1983; 49 FR 1184, Jan. 10, 1984]

Subpart E—Miscellaneous

§ 111.38 Diving operations (Rule 38).

(a) When industrial or commercial diving operations are being conducted in the Canal, or waters adjacent thereto, a revolving red light shall be displayed in all weathers from sunset to sunrise from the diving barge or other craft serving the diver. The light shall be so mounted and of sufficient intensity as to be visible for not less than 1 mile. The International Code Flag ''A'', not less than 18 inches in height and of standard proportions, shall be displayed from such craft by day where it may best be seen. A rigid replica of this flag may be substituted in lieu thereof.

(b) Recreational skin diving in waters of the Canal, including Gaillard Cut and the channel through Gatun and Miraflores Lakes and in the waters of all ships' anchorages, is prohibited unless authorized in writing by the Marine Director or his designee. Authorization shall not be given for skin diving at night. When recreational skin diving activities are under way in the Canal, or waters adjacent thereto, a flag of the type described in paragraph (a) of this section shall be displayed from the craft serving the skin diver in a manner which allows all-round visibility; however, the flag displayed for recreational diving shall be not less than 12 inches in height and of the standard proportions.

(c) Vessels approaching or passing an area where diving activities are under way shall reduce speed sufficiently to avoid creating a dangerous wash or wake.

[49 FR 30466, July 31, 1984, as amended at 55 FR 11909, Mar. 30, 1990]

§ 111.39 Water skiing prohibited (Rule 39).

No person shall operate a motorboat or other vessel in or across the navigable channels or merchant vessel anchorages while towing a person or persons on water skis, or aquaplane or similar device at any time.

§ 111.40 Operation of small craft and recreational vessels in the Canal waters (Rule 40).

(a) For the purpose of this section, a small craft is defined as any vessel for recreational purposes which is not required to have the assistance of locomotives when transiting the locks.

(b) A small craft shall not be operated by any person who is intoxicated or who is a habitual user, or under the influence of any narcotic drug or who is under the influence of any other drug to a degree which renders him incapable of safely operating the craft or vessel. The fact that one lawfully is or

has been using any drug shall not constitute a defense against a charge of violating this section.

(c) No person shall operate a small craft so close to a transiting or other vessel so as to hamper the safe operation of either vessel; nor shall any person operate a small craft in a negligent manner so as to endanger life or property.

(d) No person shall operate a small craft in the navigation channels of the Canal except when such operation is incidental to movement between points on either side of the navigation channel.

§ 111.41 Lights; marking of pipeline laid in navigable waters (Rule 41).

Whenever a pipeline is laid in navigable waters, it shall be marked at night by amber lights at intervals of 200 feet. The lights marking the limits of the gate shall be a vertical display of a white and a red light, the white light to be at least 4 feet above the red light. These lights shall be so constructed as to show all around the horizon and be visible from a distance of at least 1 mile.

PART 113—DANGEROUS CARGOES

Subpart A—General Provisions

Sec.
113.1 Application.
113.2 Definitions.
113.3 Classifications.
113.4 Safety and alarm systems.
113.5 Inspections.

Subpart B—Vessels Carrying Dangerous Cargoes in Bulk

113.21 Application.
113.22 Advance notice.
113.23 Anchoring requirements.
113.24 Signals.
113.25 Vessel requirements.
113.26 Transit requirements.
113.27 Cargo requirements.
113.28 Documents.
113.29 Prohibited cargoes.

Subpart C—Vessels Carrying Dangerous Packaged Goods

113.41 Application.
113.42 Advance notice.
113.43 Anchoring requirements.
113.44 Vessel requirements.
113.45 Transit requirements.
113.46 Cargo requirements.
113.47 Documents.
113.48 Prohibited cargoes.
113.49 Class 1, Explosives.
113.50 Class 7, Radioactive Substances.

AUTHORITY: Issued under authority vested in the President by 22 U.S.C. 3811; E.O. 12215, 45 FR 36043.

SOURCE: 50 FR 19679, May 10, 1985, unless otherwise noted.

Subpart A—General Provisions

§ 113.1 Application.

This part does not apply to vessels of war or auxiliary vessels, as those terms are defined in the Treaty Concerning the Permanent Neutrality and Operation of the Panama Canal (September 7, 1977). This part applies to all other vessels, regardless of character, tonnage, size, service, and whether self-propelled or not, and whether arriving or departing, under way, moored, anchored, aground, transiting or passing through Canal waters, that are carrying dangerous cargo as defined in § 113.2(e).

§ 113.2 Definitions.

For the purpose of this part, the following definitions will apply:

(a) *Bulk Chemical Code* means the Code for the Construction and Equipment of Ships Carrying Dangerous Chemicals in Bulk, including amendments thereto, which is generally applicable to ships built on or after April 12, 1972, but before July 1, 1986, and the International Code for the Construction and Equipment of Ships Carrying Dangerous Chemicals in Bulk, which is generally applicable to ships built on or after July 1, 1986.

(b) *Certificate of Compliance* means a certificate issued by a national government, or a society on behalf of a government, certifying that the ship is in compliance with the requirements of the Bulk Chemical Code or Gas Carrier Codes.

(c) *Certificate of Fitness* means a certificate issued by or on behalf of a national government in accordance with the Bulk Chemical Code or the Gas Carrier Codes, certifying that the construction and equipment of the vessel

are adequate to permit the safe carriage of specified dangerous substances in the vessel.

(d) *Combustible liquids* means a volatile liquid having a flashpoint at 61°C (141 °F) or above.

(e) *Dangerous cargo* means (1) any substance whether packaged or in bulk, intended for carriage or storage and having properties coming within the classes listed in the IMDG Code, and (2) any substance shipped in bulk not coming within the IMDG Code classes but which is subject to the requirements of the Bulk Chemical Code, the Gas Carrier Codes, or Appendix B of the Solid Bulk Code.

(f) *Dangerous cargo in bulk* means any dangerous substance, carried without any intermediate form of containment, in a tank or cargo space which is a structural part of a vessel or in a tank permanently fixed in or on a vessel.

(g) *Gas Carrier Codes* means the International Code for the Construction and Equipment of Ships Carrying Liquefied Gases in Bulk, which is generally applicable to ships built on or after July 1, 1986, and the Code for the Construction and Equipment of Ships Carrying Liquefied Gases in Bulk, which is generally applicable to ships built on or after December 31, 1976, but before July 1, 1986, and the Code for Existing Ships Carrying Liquefied Gases in Bulk, which is generally applicable to ships delivered before December 31, 1976.

(h) *IMDG* means the International Maritime Dangerous Goods Code.

(i) *IMO* means the International Maritime Organization (formerly International Maritime Consultative Organization).

(j) *IMO Class* means the classification of a dangerous substance under the International Convention for the Safety of Life at Sea, 1960, as amended. Under this system of classification, dangerous substances are divided into 9 classes and subdivisions based on their particular properties.

(k) *IOPP Certificate* means an IMO International Oil Pollution Prevention Certificate certifying that the ship has been surveyed in accordance with regulations of MARPOL 73/78.

(l) *MARPOL 73/78* means the IMO International Convention for the Prevention of Pollution From Ships, 1973, as modified by the Protocol of 1978 relating thereto. Any annex thereto applies to vessels in waters of the Panama Canal beginning the date on which the annex enters into force by its terms.

(m) *Packaged dangerous goods* means any dangerous cargo contained in a receptable, portable tank, freight container or vehicle. The term includes an empty receptacle, portable tank or tank vehicle which has previously been used for the carriage of a dangerous substance unless such receptacle or tank has been cleaned and dried, or when the nature of the former contents permits transport with safety.

(n) *SOLAS* means the International Convention for the Safety of Life at Sea, 1974, as amended.

(o) *Solid Bulk Code* means the International Code of Safe Practice for Solid Bulk Cargoes.

(p) Reference to codes, international agreements, or other regulations shall also be deemed to refer to any amendments or additions thereto on or after the date such amendments or additions become effective.

§ 113.3 Classifications.

(a) Dangerous cargo shall be classified in accordance with the IMO class and division. Whenever there is a doubt as to the explosive or dangerous nature of any commodity, or in case of conflict as to its classification, determination of the nature and classification of such cargoes shall be made by the Marine Safety Advisor or his designee. Dangerous cargoes shall be divided into the following classes:

(1) Class 1—Explosives.

(i) 1.1—Substances and articles which have a mass explosion hazard.

(ii) 1.2—Substances and articles which have a projection hazard but not a mass explosion hazard.

(iii) 1.3—Substances and articles which have a fire hazard and either a minor blast hazard or a minor projection hazard, or both, but not a mass explosion hazard.

(iv) 1.4—Substances and articles which present no significant hazard.

(v) 1.5—Very insensitive substances which has a mass explosion hazard.

(2) Class 2—Gases: Compressed, liquefied or dissolved under pressure.

(i) 2.1—Inflammable gases.

(ii) 2.2—Nonflammable gases.

(iii) 2.3—Poisonous gases.

(3) Class 3—Inflammable liquids.

(i) 3.1—Low flashpoint group (flashpoint below −18 °C or 0 °F).

(ii) 3.2—Intermediate flashpoint group (flashpoint between −18 °C (0 °F) and 23 °C (73 °F)).

(iii) 3.3—High flashpoint group (flashpoint between 23 °C (73 °F) and 61 °C (141 °F)).

(4) Class 4—Inflammable solids or substances.

(i) 4.1—Inflammable solids.

(ii) 4.2—Substances liable to spontaneous combustion.

(iii) 4.3—Substances emitting inflammable gases when wet.

(5) Class 5—Oxidizing substances and organic peroxides.

(i) 5.1—Oxidizing substances.

(ii) 5.2—Organic peroxides.

(6) Class 6—Poisonous and infectious substances.

(i) 6.1—Poisonous substances.

(ii) 6.2—Infectious substances.

(7) Class 7—Radioactive substances.

(8) Class 8—Corrosives.

(9) Class 9—Miscellaneous dangerous substances.

This class includes any other substance which experience has shown, or may show, to be of such a dangerous character that the application of the hazardous cargo rules are warranted. Class 9 includes a number of substances and articles which cannot be properly covered by the provisions applicable to the other classes, or which present a relatively low transportation hazard.

(b) Combustible liquids having flashpoints above 61 °C (141 °F) are not considered to be dangerous by virtue of their fire hazard.

[50 FR 19679, May 10, 1985, as amended at 54 FR 37326, Sept. 8, 1989]

§ 113.4 Safety and alarm systems.

(a) All dangerous cargo alarms, safety devices, and the vessel's firefighting systems shall be tested 24 hours prior to arrival in Canal waters by any vessel carrying dangerous cargoes. An entry shall be made in the ship's log stating that such tests were conducted and the systems found in proper working order or, if not in proper order, a detailed listing of discrepancies shall be included.

(b) This log entry shall be available for inspection by the boarding officer. Any deviations from the ''proper working order'' condition shall be brought to the attention of the boarding officer.

(Approved by the Office of Management and Budget under control number 3207–0001)

[50 FR 19679, May 10, 1985, as amended at 54 FR 37327, Sept. 8, 1989]

§ 113.5 Inspections.

The Canal Operations Captain or the Marine Safety Advisor or their designees may inspect vessels carrying dangerous cargoes to ensure that such vessels are in compliance with the requirements of this part.

[54 FR 37327, Sept. 8, 1989]

Subpart B—Vessels Carrying Dangerous Cargoes in Bulk

§ 113.21 Application.

This subpart applies to vessels carrying dangerous liquefied gases, liquids and solids in bulk, or tankers in ballast condition which are not gas free. It does not apply to vessels carrying combustible liquids in bulk as prescribed in § 113.3(b), subpart A, of this part.

[54 FR 37327, Sept. 8, 1989]

§ 113.22 Advance notice.

Vessels subject to this subpart shall provide not less than 48 hours advance notice to Canal authorities by radio of the information required by the ''GOLF'' item in the prearrival radio message prescribed in § 123.4(a) of this subchapter.

(Approved by the Office of Management and Budget under control number 3207–0001).

[54 FR 37327, Sept. 8, 1989]

§ 113.23 Anchoring requirements.

(a) Vessels subject to this subpart shall communicate with the signal stations at Flamenco Island or Christobal prior to arrival as required by § 101.1 of this title and await instructions before anchoring.

(b) Such vessels will be instructed to anchor in one of the explosive anchorage areas as described in §101.8(a) (2) and (3) and (c)(2) of this title.

§113.24 Signals.

Vessels subject to this subpart shall display the flags and lights described in §111.23(d) of this subchapter.

§113.25 Vessel requirements.

(a) Vessels subject to this subpart shall comply with the following standards set forth in IMO Conventions and Codes, which are hereby incorporated by reference:

(1) All vessels subject to this subpart shall comply with MARPOL 73/78.

(2) Vessels carrying dangerous chemicals in bulk shall comply with the Bulk Chemical Code.

(3) Bulk liquefied gas carriers shall comply with the Gas Carrier Codes.

(4) Solid bulk carriers shall comply with the Solid Bulk Code.

(b) The standards incorporated by reference in paragraph (a) of this section, are further described as follows:

(1) MARPOL 73/78 is the International Convention for the Prevention of Pollution from Ships, 1973, as modified by the Protocol of 1978 relating thereto. The Convention is contained in IMO publication number 520 77.14.E ''International Conference on Marine Pollution, 1973.'' The 1978 Protocol is contained in IMO publication number 088 78.09.E ''International Conference on Tanker Safety and Pollution Prevention, 1978.'' The Bulk Chemical Code is in two parts: the Code for the Construction and Equipment of Ships Carrying Dangerous Chemicals in Bulk, which is generally applicable to ships built on or after April 12, 1972, and before July 1, 1986, and is contained in IMO publications 767 80.13.E and 770 83.13.E. (For a complete set of the Code and its most recent amendments, both of these publications must be consulted.) The other part is the International Code for the Construction and Equipment of Ships Carrying Dangerous Chemicals in Bulk, which is generally applicable to ships built on or after July 1, 1986, and is contained in IMO publication number 100 83.11.E. The Gas Carrier Codes are the International Code for the Construction and Equipment of Ships Carrying Liquefied Gases in Bulk, which is generally applicable to ships built on or after July 1, 1986, and which is contained in IMO publication number 104 83.12.E, the Code for the Construction and Equipment of Ships Carrying Liquefied Gases in Bulk, which is generally applicable to ships built on or after December 31, 1976, but before July 1, 1976, and which is contained in IMO publication number 782 83.16.E, and the Code for Existing Ships Carrying Liquefied Gases in Bulk, which is generally applicable to ships delivered before December 31, 1976, and which is contained in IMO publication number 788 76.11.E. The Solid Bulk Code is the International Code of Safe Practice for Solid Bulk Cargoes, contained in IMO publication number 258 83.18.E. These publications are for sale from the International Maritime Organization, Publications Section, 4 Albert Embankment, London, SE1 7SR, England.

§113.26 Transit requirements.

(a) To better ensure the safe passage of vessels subject to this subpart, operating restrictions beyond those applicable to other vessels may be imposed by the Canal Operations Captain or his designee.

(b) Such vessels shall have safety towing pendants ready at hand, fore and aft, prior to entering the locks. Such pendants shall be rigged over the side when anchored or moored in Canal waters.

[50 FR 19679, May 10, 1985, as amended at 54 FR 37327, Sept. 8, 1989]

§113.27 Cargo requirements.

(a) The loading, handling, inspection, stowage, segregation, maintenance, and certification of dangerous bulk cargoes shall be in compliance with the IMO standards and regulations which are incorporated by reference in §113.25.

(b) Any special requirements for carrying chemicals or liquefied gases in bulk as stated on a vessel's Certificate of Fitness or Certificate of Compliance shall be complied with.

§113.28 Documents.

(a) Vessels subject to this subpart shall have ready for delivery to the

Canal boarding officer a loading plan, as described in § 101.10(e) of this subchapter.

(b) Such vessels shall have ready for examination, as prescribed by § 101.10(a), the following certificates:

(1) A valid MARPOL 73/78 Certificate (same as International Oil Pollution Prevention Certificate).

(2) A valid SOLAS Certificate.

(3) A valid Certificate of Fitness or Certificate of Compliance (required for bulk chemical and liquefied gas carriers only.)

(Approved by the Office of Management and Budget under control number 3207–0001)

§ 113.29 Prohibited cargoes.

(a) Unstable or explosive substances in bulk which are unduly sensitive or so reactive as to be subject to spontaneous reaction are prohibited in Canal waters.

(b) Bulk dangerous cargoes not listed in the Bulk Chemical Code, Gas Carrier Codes, or Solid Bulk Code are prohibited in Canal waters unless advance approval is given by the Marine Safety Advisor or his designee to carry such cargoes.

(c) Bulk chemical and liquefied gas carriers are prohibited from carrying in Canal waters dangerous cargoes that are not listed on their Certificate of Fitness or Certificate of Compliance, unless 30 days advance notice is given by the vessel and the Marine Safety Advisor or his designee approves the carriage of such cargoes in Canal waters.

(Approved by the Office of Management and Budget under control number 3207–0001)

[50 FR 19679, May 10, 1985, as amended at 54 FR 37327, Sept. 8, 1989]

Subpart C—Vessels Carrying Dangerous Packaged Goods

§ 113.41 Application.

This subpart applies to vessels carrying packaged dangerous goods.

§ 113.42 Advance notice.

Vessels subject to this subpart shall provide not less than 48 hours advance notice to Canal authorities by radio of the information required in the ''HOTEL'' item of the radio message prescribed in § 123.4 of this subchapter, except that vessels carrying explosives shall provide the information required in the ''GOLF'' item of the message.

(Approved by the Office of Management and Budget under control number 3207–0001)

[54 FR 37327, Sept. 8, 1989]

§ 113.43 Anchoring requirements.

(a) Vessels subject to this subpart shall communicate with the signal stations at Flamenco Island or Cristobal prior to arrival as required in § 101.1 of this subchapter and await instructions before anchoring.

(b) Such vessels will be instructed to anchor in one of the designated anchorage areas as described in § 101.8(a) or (c).

(c) Vessels carrying explosives or especially reactive or large amounts of dangerous materials as determined by the Canal Operations Captain, or his designee, may be instructed to anchor in one of the explosive anchorage areas described in § 101.8(a) (2), (3) and (c)(2) of this subchapter.

[50 FR 19679, May 10, 1985, as amended at 54 FR 37327, Sept. 8, 1989]

§ 113.44 Vessel requirements.

(a) Vessels subject to this subpart shall comply with the standards set forth in SOLAS and the IMDG pertaining to the construction, maintenance, inspection, certification, and classification of the vessel, its safety equipment including alarms, and its cargo stowage and handling systems, which are hereby incorporated by reference.

(b) SOLAS, which is incorporated by reference in paragraph (a) of this section, is the International Convention for the Safety of Life at Sea, 1974, together with the Protocol of 1978 relating thereto. The Convention is set forth in Treaties and Other International Acts Series number 9700 and the Protocol is set forth in number 10009 of the same series. These publications are for sale from the Superintendent of Documents, U.S. Government Printing Office, Washington, D.C. 20402. The Convention is also contained in IMO publication number 080 75.01.E ''International Conference on Safety of Life at Sea, 1974,'' and the Protocol is contained in IMO publication number

088 78.09.E ''International Conference on Tanker Safety and Pollution Prevention, 1978.'' IMDG is the International Maritime Dangerous Goods Code, which is contained in IMO publication numbers 200 81.10.E, 236 81.17.E, and 238 82.21.E. (For current version of the IMDG, all three publications must be consulted.) The IMO publications referred to in this paragraph are for sale from the International Maritime Organization, Publications Section, 4 Albert Embankment, London SE1 7SR, England.

§113.45 Transit requirements.

Normal operating restrictions will generally apply unless such vessels are carrying more than five tons of explosives or carrying especially more reactive or large amounts of dangerous goods as determined by the Marine Safety Advisor or his designee, in which case additional operating restrictions may be imposed.

[54 FR 37327, Sept. 8, 1989]

§113.46 Cargo requirements.

The loading, packing, labeling, marking, handling, stowage, segregation, maintenance, inspection, and certification of packaged dangerous goods shall be in compliance with the IMDG Code, which is incorporated by reference. See §113.44, Vessel Requirements.

§113.47 Documents.

Vessels subject to this subpart shall have ready for delivery to the Commission boarding officer a dangerous cargo manifest, as described in §101.10(d) of this subchapter.

(Approved by the Office of Management and Budget under control number 3207–0001)

§113.48 Prohibited cargoes.

Packaged dangerous goods which are not carried in compliance with the IMDG Code are prohibited in Canal waters.

§113.49 Class 1, Explosives.

(a) Vessels carrying explosives shall comply with the IMDG Code, which is incorporated by reference. See §113.44, Vessel Requirements, and §113.46, Cargo Requirements.

(b) Explosive cargo may be loaded and discharged only at the Mindi Dock. Explosive anchorages prescribed in §101.8 (a) (2), (3) and (c)(2), respectively, may be used upon approval of the Marine Safety Advisor, or his designee.

(c) The Marine Safety Advisor or his designee, upon application, may permit the discharge of explosives, whether intended for civilian or military use, at Commission docks and other locations within Canal waters in an emergency or when the character or packing of the explosives permits their safe discharge there.

[50 FR 19679, May 10, 1985, as amended at 54 FR 37327, Sept. 8, 1989]

§113.50 Class 7, Radioactive substances.

(a) Vessels carrying radioactive substances shall comply with the IMDG Code, which is incorporated by reference. See §113.44, Vessel Requirements, and §113.46, Cargo Requirements.

(b) Any cask or container containing radioactive substances, together with any attachments thereto, may not weigh more than 150 tons.

(c) For the purpose of approval of shipments and prior notification of radioactive substances under the IMDG Code, Panama Canal waters will be considered a country en route. Notification shall be given to Canal authorities 30 days in advance of the arrival of the vessel in Canal waters for all fissionable materials, in order that approval may be given by the Marine Safety Advisor, or his designee, to transit such cargoes.

(d) Vessels carrying nuclear materials shall be required to provide current proof of financial responsibility and adequate provision for indemnity covering public liability and loss to the United States or any agency thereof, comparable in general scope to the protection afforded under section 170 of the United States Atomic Energy Act of 1954, as amended, 68 Stat. 919, 71 Stat. 576, or consistent with international practice and standards as set forth by the Treaty Concerning the Permanent Neutrality and Operation of the Panama Canal. Vessels shall also be required to furnish the Commission

with the results of cargo radiation survey reports in accordance with the standards in IMO class 7.

(e) For the following radioactive substances, not less than 48-hour advance information required under § 123.4 shall be provided, indicating the specifics required by the IMDG Code:

(1) Low Specific Activity Substances or Low Level Solid Radioactive Substances as specified in Class 7 schedules 5, 6, and 7 of the IMDG Code.

(2) Radioactive Substances carried in limited quantities as specified in Class 7 schedules 1, 2, 3, and 4 of the IMDG Code.

(Approved by the Office of Management and Budget under control number 3207–0001)

[50 FR 19679, May 10, 1985, as amended at 54 FR 37327, Sept. 8, 1989]

PART 115—BOARD OF LOCAL INSPECTORS: COMPOSITION AND FUNCTIONS

Sec.
115.1 Board of Local Inspectors; Supervising Inspector.
115.2 Composition of the Board.
115.3 Employment of inspectors and examiners.
115.4 Recorder of Board; duties.
115.5 Recorder may administer oaths.
115.6 Assistance of owners or operators and masters.
115.7 Inspection of records of Board.

AUTHORITY: 22 U.S.C. 3778. 93 Stat. 492; E.O. 12215, 45 FR 36043.

SOURCE: 31 FR 12310, Sept. 16, 1966, unless otherwise noted.

§ 115.1 Board of Local Inspectors; Supervising Inspector.

(a) There is hereby continued the Board of Local Inspectors of the Panama Canal Commission, constituted as provided in § 115.2, which shall perform, conduct and execute, under the supervision of the Supervising Inspector:

(1) The investigations called for by section 1417, Pub. L. 96–70, 93 Stat. 487;

(2) The functions and responsibilities with which it is vested by this part and by Parts 117, 119 and 121 of this chapter; and

(3) Such other duties in matters of a marine character as it may be assigned to it from time to time by the Administrator.

(b) The Marine Director of the Panama Canal Commission shall serve, ex officio, as Supervising Inspector of the Commission except when he is designated to serve as Chairman of the Board in accordance with § 115.2(c). When the Marine Director is so designated, the Deputy Administrator or such other official as the Administrator may designate in his stead, shall serve as Supervising Inspector.

[46 FR 63187, Dec. 30, 1981]

§ 115.2 Compostion of the Board.

(a) The Board of Local Inspectors, referred to in this part as ''the Board,'' shall, except as otherwise provided in paragraphs (b) and (c) of this section, consist of the following officials who shall serve in the capacities stated:

(1) Chairman, Board of Local Inspectors.

(2) Canal Operations Captain, as member.

(3) Senior Canal Port Captain, as member.

(b) Where the subject matter of circumstances of a particular accident warrant such action, the Supervising Inspector may designate the Chief, Industrial Division to serve, ex officio, as member of the Board in place of the members listed in paragraph (a)(2) or (3) of this section. In the absence of the Chairman, the Supervising Inspector will appoint a member to act as Chairman.

(c) If the Supervising Inspector deems it appropriate in a particular investigation, he may designate an alternate to replace any official regularly serving on the Board. If he himself serves as such an alternate, he shall serve as Chairman of the Board.

(d) Any accident investigation or other proceeding may, in the discretion of the Supervising Inspector, be conducted by one or more officials of the Board. The report of any such investigation or proceeding is subject, however, to the requirements of Part 117 of this subchapter.

[35 FR 12274, July 31, 1970, as amended at 46 FR 63187, Dec. 30, 1981; 55 FR 11909, Mar. 30, 1990]

§115.3 Employment of inspectors and examiners.

The Board may employ or assign such inspectors and examiners as it may require in the inspection of vessels and in the classification and licensing of pilots, masters, mates, and engineers.

§115.4 Recorder of Board; duties.

There shall be a Recorder of the Board, whose duty it shall be to keep a record of its proceedings; of all applications for licenses; of those issued or refused; suspended, extended, or modified; together with the name, grade, and serial number of all such licenses; and of all casualties, collisions, founderings, sinkings, fires and other disasters or matters of interest that may come before the Board. Under the direction of the Chairman he shall prepare, submit, and register all licenses and certificates of inspection, and the reports mentioned in this part or in Part 117, 119, or 121 of this chapter, and shall perform such other duties as may be directed by the Chairman.

§115.5 Recorder may administer oaths.

The Recorder is authorized to administer the oaths required for the completion of official documents of, or which are presented to, the Board.

CROSS REFERENCE: For authority of the Board to administer oaths, see 2 C.Z.C. 1101, 76A Stat. 38.

§115.6 Assistance of owners or operators and masters.

Owners or operators and masters of vessels shall render all requested assistance to the Board in its investigations and inspections, and shall, when requested, put machinery and gear in operation when necessary to demonstrate the efficiency of the machinery, equipment, appliances or other gear.

§115.7 Inspection of records of Board.

All official records and documents in the office of the Board, after official action thereon has been concluded, shall be open to public inspection and examination in the office of the Board.

PART 117—MARINE ACCIDENTS: INVESTIGATIONS; CONTROL; RESPONSIBILITY

Sec.

117.1 Investigation of marine accidents.
117.1a Scheduling of investigations.
117.1b Rights of party in interest.
117.2 Change in physical status of property affected by accident forbidden.
117.3 Reports by Board to the Administrator.
117.4 Reports of accidents by officer in command to Board.
117.5 Control of wrecked, injured, or burning vessels.
117.6 Liability of vessel for injury to Canal structures or equipment.

AUTHORITY: 22 U.S.C. 3777, 3778, 93 Stat. 487; E.O. 12215, 45 FR 36043.

SOURCE: 46 FR 63188, Dec. 30, 1981, unless otherwise noted.

§117.1 Investigation of marine accidents.

(a) Whenever, within Panama Canal waters, including the locks of the Canal, a vessel, or its cargo, crew, or passenger, meets with a serious marine accident, or whenever, within the harbors, anchorages, and areas adjacent thereto, including the ports of Balboa and Cristobal, there is a serious marine accident involving Commission personnel or equipment, the Board of Local Inspectors shall promptly investigate in detail the conditions and circumstances under which such accident occurred.

(b) Any other marine accident occurring in such waters may be investigated by the Board at the discretion of the Supervising Inspector.

(c) The Master of a vessel involved in a marine accident may request an investigation of an accident not considered by the Board to fall within paragraph (a) of this section. The request must be addressed to the Supervising Inspector or the Chairman of the Board, and must be in writing. If the Master does not so request such an investigation in writing, he shall be deemed to have waived all rights to the investigation called for by section 1417, Pub. L. 96–70, 93 Stat. 487, which provides that a claim may not be considered by the Panama Canal Commission, or an action for damages lie thereon,

unless, prior to the departure from the Panama Canal of the vessel involved:

(1) The investigation by the competent authorities of the accident or injury giving rise to the claim has been completed; and,

(2) The basis for the claim has been laid before the Commission.

(d) For the purpose of this section, the term ''serious marine accident'' includes:

(1) Any accident involving substantial damage to any structure, plant, or equipment of the Panama Canal Commission or the United States; and

(2) Any accident (i) involving death or resulting in personal injury that requires admission of a person to a hospital as a bed patient; or (ii) resulting in damages to a vessel which require the making of repairs prior to the vessel's departure from the Canal; *Provided that* the Supervising Inspector or his designee has reason to believe that personnel or equipment of the Panama Canal Commission were then aboard or were assisting the vessel involved in the accident or were situated (aboard another vessel, ashore or otherwise) so as to have been a factor in the accident.

CROSS REFERENCE: Compelling attendance and testimony of witnesses and production of books and papers by Board, see section 1418, Pub. L. 96–70, 93 Stat. 487.

§ 117.1a Scheduling of investigations.

(a) Marine-accident investigations shall be scheduled so as to afford pilots and other parties in interest a period of time not less than that provided below for rest and consultation prior to the commencement of an investigation:

Relief time	Time of investigation
0000–0400	1400–1800 (12 hours minimum)
0400–0800	1600–2000 (12 hours minimum)
0800–1200	1800–2200 (10 hours minimum)
1200–1600	0800 Next Day.
1600–2000	1000 Next Day.
2000–2400	1000 Next Day.

(b) The column ''Relief Time'', set out in paragraph (a) of this section, indicates the period during which the pilot or other party in interest completed the transit during which an accident occurred or the time at which he was relieved of duty following the occurrence of an accident. The column ''Time of Investigation'', set out in paragraph (a) of this section, indicates the earliest time at which the investigation may be scheduled. In exceptional cases a departure from this schedule may be made, as for example in the case of warships or other vessels that have an imperative need to resume the voyage as soon as possible. Unless a pilot or other party in interest requests the time provided in this schedule, the hearing may be set for an earlier hour.

[32 FR 3830, Mar. 8, 1967]

§ 117.1b Rights of party in interest.

Any Panama Canal pilot or other individual who is a party in interest at a marine-accident investigation may obtain counsel of his own choosing, testify in his own behalf, cross-examine witnesses, call witnesses, and introduce any relevant evidence. The Board shall advise all parties in interest of such rights.

§ 117.2 Change in physical status of property affected by accident forbidden.

In the event of a marine accident or casualty affecting any property in Panama Canal waters, or waters adjacent thereto, or any property owned or operated by the Panama Canal Commission or the United States, which imposes on the Board an obligation to investigate, no change in the physical status of the property affected by the accident or casualty may be made or permitted prior to inspection by properly constituted authority, unless such change in status be imperative in order to preserve life or property.

§ 117.3 Reports by Board to the Administrator.

The Board shall make reports forthwith in detail to the Administrator of all marine-accident investigations conducted by it, setting forth the facts and circumstances surrounding the accident and bearing upon its proximate causation, the nature and extent of the injury and the amount of damages, if any, occasioned by such injury. The reports shall include a transcript of the record of the Board's investigation, together with its findings and opinions respecting the accident. All findings

and opinions of the Board shall be rendered by a full Board after a review of the entire transcript, even though the hearing may have been conducted by a single member of the Board or by a two-man Board. Reports to the Administrator shall be forwarded in duplicate through the Supervising Inspector, who may place thereon such endorsement as he may see fit.

§ 117.4 Reports of accidents by officer in command to Board.

The Master or other officer in command of a vessel shall, prior to the vessel's departure from Panama Canal waters, report in writing to the Board any accident involving his vessel in Canal waters that resulted in loss of life or serious personal injury or in substantial damage to property.

(Approved by the Office of Management and Budget under control number 3207–0001)

[46 FR 63188, Dec. 30, 1981, as amended at 54 FR 29336, July 12, 1989]

§ 117.5 Control of wrecked, injured, or burning vessels.

When a vessel in the Panama Canal waters goes aground, or is wrecked, or is so injured that it is liable to become an obstruction in such waters, or is on fire, the Canal Operations Captain shall have the right to supervise and direct, or to take complete charge of and conduct, all operations which may be necessary to float the vessel, to clear the wreckage, to remove the injured vessel to a safe location, or to extinguish the fire, as the case may be. The Canal Operations Captain may, when necessary, take such action without awaiting the permission of the owner or agent of the vessel, and may require the Master of the vessel and all persons under his supervision and control to place the vessel, and all equipment on board, at the disposal of the Canal Operations Captain without costs to the Commission. Unless the Panama Canal Commission is subsequently found or determined to be responsible for the accident or the condition necessitating action by the Canal Operations Captain, the necessary expenses incurred by the Commission in carrying out the provisions of this section shall be a proper charge against such vessel, her owners and her operators.

[46 FR 63188, Dec. 30, 1981, as amended at 55 FR 11909, Mar. 30, 1990]

§ 117.6 Liability of vessel for injury to Canal structures or equipment.

A vessel, or her owner or operator, shall be held liable for any injury to any structure, plant, or equipment of or pertaining to the Canal, the Panama Canal Commission or the United States when the injury is proximately caused by the negligence or fault of the vessel or its master or crew. No vessel shall make fast, or run any line, to any marker, buoy, beacon, or other aid to navigation; and a vessel shall so navigate as not to strike such aids in passing.

PART 119—LICENSING OF OFFICERS

Subpart A—General Provisions

Sec.

119.1 License defined; classification and licensing of Masters, mates, engineers, pilots, and motorboat operators.
119.2 Term of licenses.
119.3 Appeal from action refusing license.
119.5 Revocation for parting with license.
119.6 Employment of licensed officers.
119.7 Original license defined.
119.8 Application form.
119.9 Service records and endorsements.
119.10 Age and literacy requirements.
119.11 Knowledge of first aid.
119.12 Physical and experience requirements.
119.13 Burden of establishing qualifications.
119.14 Applicant to appear for examination.
119.15 Reexamination.
119.16 Raise of grade.
119.17 Renewal of license.
119.18 Sea service as member of armed forces of the United States or the Republic of Panama or on vessels owned by either nation.
119.19 Evaluation of equivalent experience.
119.20 Increase in scope of license; removal of limitations.
119.21 Written statement of reasons for denying license.
119.23 Limitations on license.
119.24 Oath of licensee.
119.25 Duplicate license.

Subpart B—Masters

119.61 Master, steam and motor vessels; experience required.

119.63 Master, non-self-propelled floating equipment; experience.

Subpart C—Mates

119.101 Mate, non-self-propelled floating equipment; experience required.
119.103 Mate, steam or motor; experience required.

Subpart D—Pilots

119.141 Pilot, Panama Canal; qualifications.
119.143 Pilot, United States Government local vessel; employment requirement.

Subpart E—Motorboat Operators

119.183 Motorboat operator; age and job requirements.
119.187 Operating test.

Subpart F—Engineers

119.221 Grade and type of engineer licenses.
119.222 Chief engineer, steam vessels; experience required.
119.223 Chief engineer, motor vessels; experience required.
119.224 Assistant engineer, steam vessels; experience required.
119.225 Assistant engineer, motor vessels; experience required.
119.226 Assistant Engineer (watch standing), motor vessel; experience required.
119.227 Chief and assistant engineer; steam and motor vessels.

AUTHORITY: Issued under authority of the President by 22 U.S.C. 3811, E.O. 12215, 45 FR 36043.

SOURCE: 46 FR 63189, Dec. 30, 1981, unless otherwise noted.

Subpart A—General Provisions

§ 119.1 License defined; classification and licensing of Masters, mates, engineers, pilots, and motorboat operators.

(a) The word *license* when used in this part means a Panama Canal Commission license unless specifically identified as one from another issuing authority.

(b) The Board of Local Inspectors shall recommend the classification of Masters, mates and engineers of steam and motor vessels owned and operated by the Panama Canal Commission, and of operators of U.S. Government motorboats operating in Panama Canal waters, excluding pleasure craft, and of Panama Canal pilots, and upon such recommendation licenses may be issued by the Supervising Inspector, or by such other officer as he may designate. No person shall act or serve as a pilot, Master, mate or engineer, or operate said motorboats, unless he holds a valid license to do so.

§ 119.2 Term of licenses.

Licenses issued to marine personnel of the Panama Canal Commission are granted to such personnel for such periods as they are employed by the Commission in a position requiring such license. Annually, all marine personnel licensed by the Panama Canal Commission shall have a physical examination attesting to their physical condition to perform their assigned work. Such examination shall include an examination of the applicant's acuity of vision and color sense.

§ 119.3 Appeal from action refusing license.

An applicant for a license as Master, mate, engineer, or pilot, for whom the Board of Local Inspectors has refused to recommend such license may appeal to the Supervising Inspector or to such other officer as the Supervising Inspector may designate. The appeal must be entered within 15 days after the final action of the Board. Upon the appeal, the Supervising Inspector or other designated officer has authority either to grant or to deny the license.

§ 119.5 Revocation for parting with license.

A license shall be immediately revoked if, for any purpose, the holder thereof voluntarily parts with its possession, or places it beyond his personal control by selling or lending it to, or pledging or depositing it with, another person.

[31 FR 12311, Sept. 16, 1966]

§ 119.6 Employment of licensed officers.

Only persons who are actually employed in, or conditionally eligible for appointment to, a position subject to licensing under this part, or who can establish that they have a bona fide intention to operate a U.S. Government local craft within Panama Canal waters, may be issued an original license

under this part. Renewals may be issued irrespective of the employment requirement if, in the judgment of the Supervising Inspector, the likelihood of return to Canal employment or other circumstances warrant renewal.

[46 FR 63189, Dec. 30, 1981; 47 FR 54072, Dec. 1, 1982]

§ 119.7 Original license defined.

The first license issue to an applicant shall be considered an original license, where the records show no previous issuance of a license of the kind concerned to such applicant.

[31 FR 12311, Sept. 16, 1966]

§ 119.8 Application form.

The applicant for a license shall make written application upon the form furnished by the Board.

[31 FR 12311, Sept. 16, 1966]

§ 119.9 Service records and endorsements.

(a) Applicants for original licenses or raise in grade of license other than motorboat operator, shall present to the Board, to be filed with their applications, letters, discharges, or other official documents, certifying to the amount and character of their experience and names of the vessels on which it was acquired. Certified photostatic copies of the aforementioned documents may be accepted.

(b) The Board shall, when practicable, require an applicant for Master's, mate's, pilot's, or engineer's license to have the written endorsement of the Master or chief engineer of the vessels upon which he has served. Applicants for license as pilot shall have the endorsement of at least two licensed pilots as to their qualifications.

§ 119.10 Age and literacy requirements.

To be eligible for examination for any license an applicant must, except as provided by § 119.183(b), be at least 21 years of age, and have the necessary experience as specified in this part. In addition, an applicant for license as pilot, Master, mate, or engineer must have a working knowledge of the English language. Proficiency in English will be determined by the Supervisory Training Instructor, Language Training Program, Office of Personnel Administration. The examination will be given in either English or Spanish, according to the choice of the applicant.

§ 119.11 Knowledge of first aid.

An applicant for an original license as master, mate, pilot, or engineer, may not be examined unless he presents satisfactory evidence to the Board that he has completed a course of instruction and passed an examination in the principles of first aid administered by an agency recognized as competent by the Supervising Inspector. Possession of any valid U.S. Coast Guard license shall constitute satisfactory evidence of the applicant's compliance with this requirement.

[43 FR 13380, Mar. 30, 1978]

§ 119.12 Physical and experience requirements.

(a) All applicants for original license must pass a physical examination given by a physician recognized by the Commission, and present a certificate executed by the examining physician to the Board. The certificate shall attest to the applicant's acuity of vision, color sense, and general physical condition.

(b) For original license as master, mate, or pilot, the applicant must have either with or without glasses, at least 20/20 vision in one eye, and at least 20/40 in the other. An applicant who wears glasses, however, must also be able to pass a test without glasses of at least 20/40 in one eye and at least 20/70 in the other. The applicant's color sense shall be tested by an approved method.

(c) Applicants for original license as engineer shall be examined only as to their ability to distinguish the colors red, blue, green, and yellow.

(d) For original license as engineer, the applicant must have either with or without glasses at least 20/30 vision in one eye, and at least 20/50 vision in the other. An applicant who wears glasses, however, must also be able to pass a test without glasses of at least 20/50 in one eye and at least 20/70 in the other.

(e) If an applicant is not possessed of the vision, hearing, and general physical condition considered necessary, the Board, after consultation with the

examining physician, may make recommendations to the Supervising Inspector for an exception to these requirements if, in its opinion, extenuating circumstances warrant special consideration.

(f) No original license shall be issued to any person unless 25 percent of the required experience has been obtained within the three years immediately preceding the date of application. Such period shall include, in addition to the three years specified, any service in the Armed Forces of the United States or the Republic of Panama that immediately preceded or interrupted the last three years spent by the applicant in a civilian status prior to the date of the application. When an applicant for a license as engineer does not meet the requirement of this paragraph, but is otherwise qualified, the Board may examine him and recommend to the Supervising Inspector that he be licensed. In such cases a license may be issued provided the applicant has satisfactorily completed a 90-day period as trainee aboard applicable equipment of the Panama Canal Commission.

(g) It is not required that an applicant has obtained his experience on United States vessels. Experience on foreign vessels will be given due credit.

(h) An applicant for a license may not be given a grade of license higher than that in which he has served. However, this paragraph shall not apply to persons qualifying for license under the Panama Canal pilot Master and engineer training programs.

(i) When a qualified person makes application for license it shall be the duty of the Board to give the applicant the required examination as soon as practicable.

[31 FR 12311, Sept. 16, 1966, as amended at 46 FR 63190, Dec. 30, 1981]

§ 119.13 Burden of establishing qualifications.

Applicants for licenses must establish to the satisfaction of the Board that they possess all of the qualifications necessary, such as age, experience and character before they shall be entitled to be issued licenses.

§ 119.14 Applicant to appear for examination.

(a) Except as provided in paragraph (c) of this section, before an original license or raise in grade is issued to any person to act as Master, mate, pilot, or engineer, he shall personally appear before the Board and pass a written examination, covering such subjects as will demonstrate that the applicant has sufficient knowledge of maritime matters necessary for the license for which he has applied. A list of subjects to be tested may be obtained from the Board.

(b) Applicants will also be required to pass a practical examination.

(c) Upon the recommendation of the Board that he do so, the Supervising Inspector may, at his discretion, issue an original license either without an examination or with an examination covering only subjects of a local nature, to an applicant who possesses a currently valid marine license issued by a competent national authority and who is otherwise eligible under this part.

[46 FR 63189, Dec. 30, 1981; 47 FR 54072, Dec. 1, 1982]

§ 119.15 Reexamination.

An applicant for license who has been duly examined and refused a license, may come before the Board for reexamination at any time thereafter fixed by the Board.

[31 FR 12311, Sept. 16, 1966]

§ 119.16 Raise of grade.

(a) Upon the issuance of a license involving a raise of grade, the applicant shall surrender the old license to the Board.

(b) The Board shall, before granting a raise of grade of license, require the applicant to make written application on a prescribed form.

(c) The grade of a license as Master, mate, or pilot may not be raised except upon the certificate of a physician recognized by the Panama Canal Commission, attesting that the color sense of the applicant is normal. Applicants for raise of grade of engineer license are not subject to this requirement. Nothing herein contained shall debar an applicant who has lost the sight of one

eye from securing a raise of grade of his license if he is qualified in all other respects and his vision in his one eye passes the test required for the better eye of an applicant having vision in both eyes.

(d) Applicants for raise of grade of license shall present to the Board letters, discharges, or other official documents certifying to the amount and character of their experience and the names of the vessels on which it was acquired.

(e) A raise of grade of license may not be granted to any applicant unless 25 percent of the required sea service shall have been served within the three years immediately preceding the date of application. Service in the armed forces of the United States or Republic of Panama shall not be counted in computing the three years.

(f) Sea service acquired prior to the issuance of the license held may not be accepted as any part of the service required for raise of grade.

§ 119.17 Renewal of license.

(a) Applicants for renewal of master's, mate's, or pilot's license shall present evidence of service on waters for which licensed obtained within the 3 years next preceding the date of application, or shall present evidence of employment in a position closely related to the operation of vessels within the same 3-year period. If this requirement is not met, the Board shall determine to its satisfaction that the licensed officer is thoroughly familiar with the International rules of the road or the pilot or special rules applicable to the waters for which the applicant is licensed. A written examination may be required for this purpose or the applicant may be examined orally and a summary of the oral examination placed on the officer's license file.

(b) A license may not be renewed if title to it has been forfeited or if facts which would render renewal improper have come to the attention of the Board.

(c) A 12-month period of grace shall be allowed after the expiration date of the license held, during which period it may be renewed. Active service in the armed forces or the merchant marine shall not be included in computing the period of grace: *Provided, however,* That this exception applies only to such periods of service, or portions thereof, during which there was no reasonable opportunity for renewal.

(d) A license may not be renewed more than 30 days in advance of the date of expiration thereof, unless there are extraordinary circumstances that justify a renewal beforehand, in which case the reasons must appear in detail in the records of the Board.

(e) A license as Master, mate, or pilot may not be renewed except upon the official certificate of a physician recognized by the Commission that the color sense of the applicant is normal. Applicants for renewal of license as engineer are not subject to this requirement.

(f) [Reserved]

(g) Nothing contained herein shall debar an applicant who has lost the sight of one eye from securing a renewal of his license, if he is qualified in all other respects, and the vision in his one eye passes the test required for the better eye of an applicant having sight in both eyes.

(h) An officer making application for a renewal of his license shall appear in person before the Board, except in cases where the distance from the office of the Board is such as to put the applicant to great inconvenience and expense to appear in person. In this event he may, upon taking the oath of office before a person authorized to administer oaths, and upon forwarding the oath, together with the license to be renewed, and the written application and certificate of visual examination where required, have the license renewed by the Board, if a valid reason to the contrary is not known. The Board shall attach the oath to the stub end of the license, which is to be retained on file in the Board's office.

(i) If an applicant applies for renewal of his license for the same grade, after 12 months after the date of its expiration, he must pass an examination for the same grade of license, of such length and scope as will, in the judgment of the Board, be sufficient to demonstrate adequately the continued professional knowledge of the examinee, except that a professional examination shall not be required if the license expired during the time of the

holder's service with the armed forces or the merchant marine, and there was no reasonable opportunity for renewal.

[31 FR 12311, Sept. 16, 1966, as amended at 46 FR 63190, Dec. 30, 1981]

§ 119.18 Sea service as member of armed forces of the United States or the Republic of Panama or on vessels owned by either nation.

(a) Sea service as a member of the armed forces of the United States or the Republic of Panama will be accepted as qualifying experience for an original, raise of grade, or extension of route of license. Such service will be subject to evaluation to determine its equivalent to the sea service required on merchant-type vessels, and to determine the appropriate grade, class, and limit of license for which the applicant is eligible. An applicant may be permitted to omit the examination for intermediate grades of license if his experience is of such character as to qualify him for a higher, or the highest, grade of license.

(b) If a person who has served in a civilian capacity as commanding officer, Master, mate, engineer, or pilot, etc., of any vessel owned and operated by the United States or the Republic of Panama, in a service in which a license as Master, mate, engineer, or pilot was not required at the time of the service, applies for examination for license, the Board shall evaluate the time or service and allow appropriate credit therefor.

§ 119.19 Evaluation of equivalent experience.

If an applicant presents evidence of service or experience which does not meet the specific requirements of these regulations, but which, in the opinion of the Board, is a reasonable equivalent thereof, the Board may evaluate the experience and allow appropriate credit therefor.

[31 FR 12311, Sept. 16, 1966]

§ 119.20 Increase in scope of license; removal of limitations.

(a) If the Board is satisfied on the basis of documentary evidence submitted that an applicant is entitled by experience and knowledge to an increase in the scope of his license, the Board may recommend removal or modification of any limitations which may have previously been placed upon the license.

(b) A limitation on a license may not be changed before the applicant has made up any deficiency in the experience prescribed for the license desired and has passed the necessary examination.

[31 FR 12311, Sept. 16, 1966]

§ 119.21 Written statement of reasons for denying license.

If the Board declines to recommend the applicant for the license applied for, it shall furnish him a statement, in writing, setting forth the reasons for its refusal to make the recommendation.

[31 FR 12311, Sept. 16, 1966]

§ 119.23 Limitations on license.

The Board may limit, as appropriate, the tonnage, length, horsepower, type of vessel(s) and the waters upon which any licensee may act. The Board will note any such limitations on the license.

§ 119.24 Oath of licensee.

Every person receiving a license or certificate of lost license shall sign same upon the back thereof immediately upon its receipt, and execute an oath faithfully to perform the duties of this position, which shall be attached to the stub end of the license retained by the Board.

[31 FR 12311, Sept. 16, 1966]

§ 119.25 Duplicate license.

If a person to whom a license has been issued loses his license, he shall promptly report the loss to the Board. The Board shall issue a duplicate license after receiving from the person a properly executed affidavit giving satisfactory evidence of the loss. The license shall be issued as a duplicate by the addition of the following written endorsement: ''This license replaces License Number —— issued at —— on the above date.'' The duplicate license shall have the same force and effect as the original, lost license.

Subpart B—Masters

§ 119.61 Master, steam and motor vessels; experience required.

In order to be eligible for a Panama Canal license as Master of steam and motor vessels, an applicant must—

(a) Hold a currently valid Panama Canal license as mate of steam and motor vessels, and have served at least 260 eight-hour watches in charge of a deck watch on Panama Canal Commission vessels of 75 feet in length engaged in towing; or

(b) Hold a license as Master or mate of steam and motor vessels issued by an authority outside the Panama Canal, and have served at least 260 eight-hour watches as a licensed officer in charge of a deck watch on steam or motor vessels over 75 feet in length engaged in towing.

§ 119.63 Master, non-self-propelled floating equipment; experience.

In order to be eligible for examination for the license of Master of non-self-propelled floating equipment, an applicant must have at least 260 eight-hour watches of experience as mate on Panama Canal Commission non-self-propelled floating equipment or such experience on other vessels as the Supervising Inspector determines to be equivalent thereto.

Subpart C—Mates

§ 119.101 Mate, non-self-propelled floating equipment; experience required.

An applicant for mate of non-self-propelled floating equipment shall be eligible for examination after he has furnished satisfactory documentary evidence to the Board that he has:

(a) Served a 4-year apprenticeship as mate, dredge; or

(b) Completed 2 years of qualifying experience in the deck department of non-self-propelled floating equipment and completed adequate apprenticeship training; or

(c) Such other experience as upon the recommendation of the Chief, Dredging Division is considered to be a satisfactory equivalent thereto.

[34 FR 7912, May 20, 1969]

§ 119.103 Mate, steam or motor; experience required.

In order to be eligible for examination for the license of mate of steam or motor vessels, an applicant must—

(a)(1) Have graduated from either the Panama Nautical School's program for deck officers, a maritime academy in the United States recognized by the U.S. Coast Guard for licensing purposes, or from another maritime academy located outside the United States which is determined by the Supervising Inspector to have standards substantially equal to United States academies; (2) be serving as Mate Trainee, Towboat in a Panama Canal Commission training program; and (3) completed at least 260 eight-hour deck watches as Mate Trainee, Towboat: or

(b) Have graduated from the Panama Canal Commission apprentice program for Mate, Towboat, and have satisfactorily completed at least 260 eight-hour deck watches as Mate Trainee, Towboat: or

(c) Hold a license as mate issued by an authority recognized and approved by the Supervising Inspector and have at least 260 eight-hour watches of experience as a licensed officer in charge of deck watch on steam or motor vessels over 75 feet in length engaged in towing: or

(d) Present evidence of recent service or experince which is considered at least equivalent to the requirements provided in paragraph (a), (b), or (c), of this section, as determined by a review board composed of three Commission officials, appointed by the Supervising Inspector.

[52 FR 3800, Feb. 6, 1987]

Subpart D—Pilots

§ 119.141 Pilot, Panama Canal; qualifications.

(a) An applicant for a license as Pilot, Panama Canal, Of Vessels Not Over 225 Feet in Length Upon All Panama Canal Waters must have been employed by the Panama Canal Commission as Pilot-in-Training for at least 17 weeks and must meet the following minimum requirements:

(1) He must have served at least three years as a licensed deck officer on vessels of 1,000 gross tons or over, one year of which must have been as a chief mate while holding a license issued by the U.S. Coast Guard as Chief Mate Unlimited, or its equivalent as determined by the Supervising Inspector; or

(2) He must have served at least three years as a pilot on vessels of 4,000 gross tons or over on the Great Lakes while holding license issued by the U.S. Coast Guard as First Class Pilot, Great Lakes; or

(3) He must have served at least 520 eight-hour watches as Master of Panama Canal Commission vessels of 1,000 horsepower or over while holding a Panama Canal license as Master of Steam and Motor Vessels; or

(4) He must have completed the Pilot Training Program conducted by the Panama Canal Commission.

(b) An applicant for a license as Pilot, Panama Canal, Of Vessels Not Over 526 Feet in Length Upon All Panama Canal Waters must have been employed by the Panama Canal Commission as pilot of vessels not over 225 feet in length for at least 12 weeks.

(c) An applicant for a license as Pilot, Panama Canal, Of Vessels of Any Tonnage Upon All Panama Canal Waters must have been employed by the Panama Canal Commission as pilot of vessels not over 526 feet in length for at least 52 weeks.

(d) Prior to receiving any license as Pilot under this section, an applicant must pass a prescribed examination.

(e) The qualifying periods of employment specified in paragraphs (a), (b) and (c) of this section may be shortened or lengthened by the Administrator, upon recommendation of the Supervising Inspector where the pilot demonstrates other than normal competence.

[38 FR 27386, Oct. 3, 1973, as amended at 46 FR 63191, Dec. 30, 1981; 48 FR 6709, Feb. 15, 1983]

§ 119.143 Pilot, United States Government local vessel; employment requirement.

An applicant for pilot, U.S. Government local vessel, must be in the employment of the Panama Canal Commission as Master or mate of a Panama Canal Commission vessel or the employment of the U.S. Army or U.S. Navy as Master or mate of a U.S. Government local vessel, such as a mine sweeper, landing craft, patrol boat or tug, or he must be conditionally eligible for such employment.

Subpart E—Motorboat Operators

§ 119.183 Motorboat operator; age and job requirements.

(a) The Board may examine and the Supervising Inspector may issue licenses to operate motorboats to qualified applicants. To be eligible for examination, an applicant shall establish that his is conditionally eligible for appointment to a position with the Panama Canal Commission or with another U.S. Government agency operating in Canal waters requiring a motorboat operator's license. Licenses to operate motorboats will be issued only to the extent, and subject to such conditions and limitations, as the Supervising Inspector determines appropriate.

(b) A person must be 18 years of age or over to be issued a motorboat operator's license.

§ 119.187 Operating test.

An applicant for motorboat operator's license shall pass a practical demonstration of his ability to operate a motorboat properly and safely, in the presence of an inspector, or submit satisfactory proof of such capability.

Subpart F—Engineers

§ 119.221 Grade and type of engineer licenses.

Engineer licenses issued under this part are limited to the grades of Chief Engineer, Assistant Engineer and Assistant Engineer (Watch Standing) on steam vessels, motor vessels or steam and motor vessels.

[55 FR 4837, Feb. 12, 1990 and 55 FR 15228, Apr. 23, 1990]

§ 119.222 Chief engineer, steam vessels; experience required.

In order to be eligible for examination for the license of chief engineer of steam vessels, an applicant must—

(a) Hold a valid license as assistant engineer of steam vessels, meet the experience requirements of paragraph (a) or (b) of § 119.224, and have served at least 260 eight-hour watches as assistant engineer on Panama Canal Commission steam vessels; or

(b) Hold a valid license as assistant engineer of steam vessels, and have served at least 260 eight-hour watches as a licensed officer in charge of an engine room watch on steam vessels of at least 3,000 horsepower; or

(c) Meet the experience requirements of paragraph (b) of § 119.223, and, while holding a license as chief engineer of motor vessels, have served at least 130 eight-hour watches as observer-chief engineer on steam vessels; or

(d) Hold a valid license as chief or assistance engineer of steam vessels issued by an authority outside the Panama Canal and meet the hourly watch requirements of paragraphs (a) (b) or (c) of this section.

[43 FR 13381, Mar. 30, 1978, as amended at 46 FR 63192, Dec. 30, 1981]

§ 119.223 Chief engineer, motor vessels; experience required.

In order to be eligible for examination for the license of chief engineer of motor vessels, an applicant must—

(a) Hold a valid license as assistant engineer of motor vessels, meet the experience requirements of paragraphs (a) or (b) of § 119.225, and have served at least 260 eight-hour watches as assistant engineer of motor vessels; or

(b) Meet the experience requirements of paragraph (a) of § 119.222, and while holding a license as chief engineer of steam vessels, have served at least 65 eight-hour watches as observer-chief engineer of motor vessels; or

(c) Hold a valid license as Chief or Assistant Engineer of motor vessels issued by an authority outside the Panama Canal and have served at least 260 eight-hour watches as a licensed officer in charge of an engine room on motor vessels of at least 3000 horsepower; or

(d) Hold a valid license as Assistant Engineer (Watch Standing) of motor vessels, and have served at least 520 eight-hour watches as licensed officer in charge of an engine room watch on motor vessels of at least 3000 horsepower.

[43 FR 13381, Mar. 30, 1978, as amended at 46 FR 63192, Dec. 30, 1981; 55 FR 4837, Feb. 12, 1990; 55 FR 15228, Apr. 23, 1990]

§ 119.224 Assistant engineer, steam vessels; experience required.

In order to be eligible for examination for the license of assistant engineer of steam vessels, an applicant therefor must—

(a)(1) Have graduated from either the Panama Nautical School's program for engineer officers, from a maritime academy in the United States recognized by the U.S. Coast Guard for licensing purposes, or from another maritime academy located outside the United States which is determined by the Supervising Inspector to have standards substantially equal to the U.S. Academies, and (2) be participating in an approved Panama Canal Commission training program for chief engineer of steam vessels; or

(b) Have satisfactorily completed an approved Panama Canal Commission training program for chief engineer of steam vessels of at least four years' duration and have completed at least 260 eight-hour watches in the engine room of a Panama Canal Commission steam vessel under the supervision of a licensed engineer.

(c) While holding a license as assistant engineer of motor vessels, have served at least 130 eight-hour watches as observer-assistant engineer on steam vessels.

[43 FR 13382, Mar. 30, 1978, as amended at 46 FR 63192, Dec. 30, 1981]

§ 119.225 Assistant engineer, motor vessels; experience required.

In order to be eligible for examination the license of assistant engineer of motor vessels, an applicant therefor must—

(a)(1) Have graduated from either the Panama Nautical School's program for engineer officers, from a maritime academy in the United States recognized by the U.S. Coast Guard for licensing purposes or from another maritime academy located outside the United States which is determined by the Supervising Inspector to have standards substantially equal to the

U.S. Academies, and (2) be participating in an approved Panama Canal Commission training program for chief engineer of motor vessels; or

(b) Have satisfactorily completed an approved Panama Canal Commission training program for chief engineer of motor vessels of at least four years' duration and have completed at least 260 eight-hour watches in engine room of a Panama Canal Commission motor vessel under the supervision of a licensed engineer; or

(c) While holding a license as assistant engineer of steam vessels, have served at least 130 eight-hour watches as observer-assistant engineer on motor vessels.

§ 119.226 Assistant engineer (watch standing), motor vessel; experience required.

In order to be eligible for examination for the license of Assistant Engineer (Watch Standing) of motor vessels, an applicant therefore must:

(a) Have graduated from the marine engineering program of a recognized maritime academy; or

(b) Have graduated from a recognized marine engineer apprentice program; or

(c) Have graduated from the professional (college-level) marine engineering program of a recognized school of technology, and have completed three months of service in the engine department of a steam and/or motor vessel under the supervision of a licensed engineer; or

(d) Have graduated from the professional (college level) mechanical or electrical engineering program of a recognized school of technology, and have completed six months of service in the engine department of a steam and/or motor vessel under the supervision of a licensed engineer; or

(e) Have three years of service in the engine room of a steam and/or motor vessel, eighteen months of which must have been as a qualified member of the engine department or equivalent supervisory position. (A qualified member of the engine department is any person below the rating of license officer and above the rating of coal passer, wiper or assistant electrician, who holds a current, valid permanent certificate of service as a qualified member of the engine department issued by the U.S. Coast Guard or a currently valid equivalent certificate of service issued by the Government of Panama. Ratings included are those of donkeyman, refrigerating engineer, oiler, deck engineer, fireman, electrician, water tender, junior engineer, machinist, pumpman, deck engine mechanic, and engineman.)

[55 FR 4837, Feb. 12, 1990, as amended at 55 FR 15229, Apr. 23, 1990]

§ 119.227 Chief and assistant engineer; steam and motor vessels.

Upon request, the Supervising Inspector may issue (a) a single license for chief engineer of steam and motor vessels to persons holding currently valid licenses as chief engineer of steam vessels and chief engineer of motor vessels and (b) a single license for assistant engineer of steam and motor vessels to persons holding currently valid licenses as assistant engineer of steam vessels and assistant engineer of motor vessels.

[43 FR 13382, Mar. 30, 1978]

PART 121—INSPECTION AND REGISTRATION OF VESSELS

Subpart A—General Provisions

Sec.
121.1 Applicability of part.
121.2 Definitions.

Subpart B—Inspection

VESSELS

121.41 Certificates of inspection.
121.42 Distribution of certificates.
121.43 Fee for inspection.
121.44 Standards in inspection of hulls.
121.45 Drawings of new vessels to be furnished to the Marine Safety Unit.
121.46 Inspection of tank vessels.
121.47 Inspection of hulls.
121.48 Sea chests, sea valves and strainers.
121.49 Pumping arrangements.
121.50 Steering arrangements.
121.51 Watertight bulkheads and doors.
121.52 Engine room signal gear.
121.53 Materials, construction, and repairs of boilers and machinery.
121.54 Preparation of boilers for inspection.
121.55 Tests and inspections of new boilers.
121.56 Tests and inspections of boilers and main steam pipes in service.

121.57 Inspection of mountings and attachments.
121.58 Safety valves.
121.59 Fusible plugs.
121.60 Water columns, test cocks, and water gages.
121.61 Steam gages.
121.62 Safety valves or relief valves on reduced pressure lines, evaporators, etc.
121.63 Guards in dangerous places.
121.64 Unfired pressure vessels.
121.65 Notice to the Marine Safety Unit of vessel on dock; alterations.
121.66 Whistles.
121.67 Fog bells.
121.68 Engine signals; voice tubes.
121.69 Proceeding to another port for repairs.
121.70 Marking of draft on vessel.
121.71 Emergency lighting system.
121.72 Repairs to firefighting and lifesaving apparatus.
121.73 Extra steering apparatus.
121.74 Repairs on boilers and unfired pressure vessels.
121.75 Increase in passenger allowance.
121.76 Inclining test.
121.77 Inspection of steam pipes.
121.78 Deep-sea sounding apparatus.
121.79 Carrying of excess steam.
121.80 Signaling lamps.
121.81 Steering gear tests.
121.82 Hatches.
121.83 Draft.
121.84 Lookouts and fire patrolmen.
121.85 Sanitation.
121.86 Fuel tanks; fuel piping.
121.87 Examination of boilers and machinery by engineer.
121.88 Fusible plug report.
121.89 Boiler steam hours.
121.90 Annual report of floating equipment on hand.
121.91 Inspectors not to accept statements.
121.92 Lifesaving apparatus.
121.93 Care of lifeboats.
121.94 Lifeboat equipment.
121.95 Line-throwing appliances and equipment.
121.96 Life preservers; number required.
121.97 Life preserver inspection.
121.98 Means of escape from vessels.
121.99 Fire axes.
121.100 Fire detecting and alarm system.
121.101 Steam and inert-gas fire extinguishing systems, fire pumps, outlets and hoses.
121.102 Portable fire extinguishers.
121.103 Station bills.
121.104 Fire alarm signals; drills.
121.105 Fire hazards, and fire extinguishing equipment.
121.106 Fire-fighting equipment on steam propelled vessels.
121.107 Non-self-propelled vessels; equipment.
121.108 Complement of officers and crew.

MOTORBOATS

121.131 Equipment on motorboats.
121.132 Motorboat filling, venting, and sounding pipes; shut-off valves.
121.133 Carburetor back-fire flame arrestor.
121.134 Ventilation of motorboats.

Subpart C—Registration and Numbering

121.171 Registration and numbering of motorboats.
121.172 Numbers to be displayed on motorboats.
121.173 Registration and numbering of vessels under 20 meters (65′) in length not propelled by machinery.
121.174 Numbers to be displayed on vessels under 65 feet other than motorboats.

AUTHORITY: 22 U.S.C. 3811, E.O. 12215, 45 FR 36043, and 44 U.S.C. 3501.

SOURCE: 31 FR 12316, Sept. 16, 1966, unless otherwise noted.

Subpart A—General Provisions

§121.1 Applicability of part.

Except as otherwise specifically herein provided, the regulations in this part apply only to vessels, floating equipment and motorboats owned or operated by the Panama Canal Commission or by the United States or any of its agencies operating in Panama Canal waters.

[46 FR 63192, Dec. 30, 1981]

§121.2 Definitions.

As used in this part, the following terms have the meanings indicated:

(a) *Vessel* means any vessel as defined in §111.3 other than a motorboat as defined in this section.

(b) *Motorboat* means any vessel not more than 20 meters (65 feet) in length propelled by machinery except tugboats and towboats. The word ''motorboat'' includes a boat temporarily or permanently equipped with a detachable motor. Motorboats are classed as follows:

Class A—Any motorboat less than 7 meters (23 feet) in length.

Class B—Any motorboat 7 meters (23 feet) or over and less than 12 meters (40 feet) in length.

Class C—Any motorboat 12 meters (40 feet) or over and less than 20 meters (65 feet) in length.

Class D—Any cayuco or piragua not more than 20 meters (65 feet) in length equipped

with an outboard motor or motors operating in Madden or Gatun Lakes.

[54 FR 37328, Sept. 8, 1989]

Subpart B—Inspection

VESSELS

§ 121.41 Certificates of inspection.

(a) Certificates of inspection shall be issued for a period of 1 year to passenger vessels, vessels equipped with boilers, and vessels whose hull or machinery is, in the judgment of the Marine Safety Unit, in such condition as to require inspection annually.

(b) Certificates of inspection will normally be issued for 2 years to all vessels not covered by paragraph (a) of this section.

(c) Application shall be made by the owner or other responsible person for inspection and issuance of a new certificate of inspection prior to expiration of the certificate.

[31 FR 12316, Sept. 16, 1966, as amended at 54 FR 37328, Sept. 8, 1989]

§ 121.42 Distribution of certificates.

Two copies of the certificate of inspection shall be retained on file by the Marine Safety Unit. The original and one copy shall be given to the master or owner of the vessel named therein.

[54 FR 37328, Sept. 8, 1989]

§ 121.43 Fee for inspection.

Before a certificate of inspection may be issued to any transiting vessel, or U.S. Government local craft, the Master or owner of such vessel or other responsible person shall pay to the Treasurer, Panama Canal Commission the fees established by the Canal authorities for inspection and examination and for the issuance of certificates.

[46 FR 63192, Dec. 30, 1981]

§ 121.44 Standards in inspection of hulls.

In the inspection of hulls of vessels, the rules promulgated by the American Bureau of Shipping or other recognized classification society respecting material and construction of hulls, except where otherwise provided for in this part shall be accepted as the standard.

§ 121.45 Drawings of new vessels to be furnished to the Marine Safety Unit.

The owner or other responsible person, when applying for the first inspection to a new vessel, shall furnish the Marine Safety Unit the following drawings and prints for review prior to construction: Midship section, inboard profile, outboard profile, arrangement of decks and hatch details, capacity of double bottoms and fuel compartments, hull penetrations and shell connections, machinery installation, piping systems, lifesaving equipment, fire fighting equipment, electrical, general alarm, radio, and emergency light circuits, and such other drawings or prints as show the general construction of the vessel, including dimensions, spacing of frames, disposition of hull plates, construction of transverse and longitudinal bulkheads, and location of same.

(Approved by the Office of Management and Budget under control number 3207–0001)

[54 FR 37328, Sept. 8, 1989]

§ 121.46 Inspection of tank vessels.

Tank vessels shall be inspected in accordance with the provisions of this part and of Part 113 of this chapter. Conditions and design of tank vessels not specifically covered by the provisions of this part or by the provisions of Part 113 of this chapter shall conform to the pertinent provisions of the Tank Vessel Regulations of the U.S. Coast Guard.

CROSS REFERENCE: Tank vessel regulations of United States Coast Guard, see 46 CFR Part 30 *et seq.*

§ 121.47 Inspection of hulls.

(a) In the inspection of hulls of vessels, the inspector shall carefully inspect every accessible part of the hull, and carefully examine the wood or metal of which the hull is constructed to determine the condition of same, making all necessary hammer tests of hulls constructed of iron or steel. If the inspector shall not have satisfactory evidence otherwise of the soundness of the hull of a wooden vessel, he shall have the hull bored or opened up to his satisfaction.

(b) All scupper, sanitary, and other similar discharges which lead through the ship's hull shall be fitted with efficient means for preventing the ingress of water in the event of a fracture of such pipes. The requirements of this paragraph do not apply to the discharges in the machinery space connected with the main and auxiliary engines, pumps, etc.

(c) The outboard shaft or shafts on every ocean or coastwise vessel shall be drawn for examination at least once every 3 years: Provided, that when it is shown that a vessel has had a long period of lay-up the Marine Safety Unit may grant an extension equal to the time the vessel has been out of commission, but in no case shall the extension exceed 1 year.

(d) Where the propelling machinery is located amidships the afterbearing shall be rebushed when it is worn down to ¼ inch clearance for shafts of 9 inches or less in diameter, 5/16 inch clearance for shafts exceeding 9 inches but not exceeding 12 inches in diameter, and ⅜ inch clearance for shafts exceeding 12 inches diameter. Where the propelling machinery is located aft the maximum clearance shall be one grade (1/16 inch) less than the above clearance.

[31 FR 12316, Sept. 16, 1966, as amended at 54 FR 37328, Sept. 8, 1989]

§121.48 Sea chests, sea valves and strainers.

Sea chests, sea valves, and strainers shall be carefully examined by the inspector when the vessel is in drydock, and, if deemed necessary, they shall be opened up for internal examination. This requirement also applies to bilge injection valves. All iron or steel fastenings of sea cocks and valves to the shell plating shall be examined and shall be renewed if necessary.

§121.49 Pumping arrangements.

The pumps and pumping arrangements, including valves, pipes and stainers, from the several holds, as well as from the engine and boiler spaces shall be examined at each inspection.

§121.50 Steering arrangements.

All parts of the steering arrangements, including the gear, quadrants, blocks, rods, chains, or other transmission gear and brakes shall be carefully examined by the inspector at each inspection.

§121.51 Watertight bulkheads and doors.

All watertight bulkheads and watertight doors shall be examined and found or required to be placed in good and efficient condition. Watertight bulkheads shall be tested with a head of water if considered necessary.

§121.52 Engine room signal gear.

Signal systems between engine room and pilot house, whether they be telegraph, bell, whistle, telephone, or voice tubes, shall be examined and tested at each inspection.

§121.53 Materials, construction, and repairs of boilers and machinery.

Materials used and the methods employed in the construction and repairs of boilers and machinery, and the design of boilers and machinery, shall be in accordance with the marine engineering regulations and material specifications of the U.S. Coast Guard, or the rules for building and classing steel vessels of the American Bureau of Shipping, or other recognized classification society, unless otherwise provided in this part.

§121.54 Preparation of boilers for inspection.

It shall be the duty of the chief engineer to have the boilers which are to be inspected filled with water, safety valves secured by clamps or gags, tubes swept, back connections and furnaces cleaned out, and the water in boilers at a temperature of not more than 180° F. for watertube boilers and not more than 100° F. for fire-tube boilers.

§121.55 Tests and inspections of new boilers.

All boiler tests and inspections of new boilers shall conform to the standards of the U.S. Coast Guard ''Marine

Engineering Regulations'' (46 CFR, Subchapter F).

§ 121.56 Tests and inspections of boilers and main steam pipes in service.

All tests and inspections of boilers and main steam pipes in service shall conform to the standards of the U.S. Coast Guard ''Marine Engineering Regulations'' (46 CFR, Subchapter F).

§ 121.57 Inspection of mountings and attachments.

All valves on boilers shall be opened up every 4 years at the time of annual inspection or the next regular drydocking period thereafter. All valves shall be removed from the boiler at least once every 8 years to determine the condition of the stud bolts connecting the valves to the boiler. These examinations may be made at intermediate periods if there is any evidence to indicate that defects have started or excessive corrosion exists.

§ 121.58 Safety valves.

(a) At the annual inspection of each boiler, the marine safety inspector shall check the setting of each boiler safety valve and make any adjustments that may be necessary to keep the boiler within the maximum allowable pressure. After adjusting the boiler safety valves, the marine safety inspector shall seal each safety valve separately with the official seal of the Marine Safety Unit.

(b) Each chief engineer, upon taking charge of the power plant of a vessel, shall examine all safety valves and if any seals are broken, or there is any evidence that valves have been tampered with, he shall report same in writing to the Marine Safety Unit. If at any time it is necessary to break the seal on a safety valve for any purpose, the chief engineer shall advise the Marine Safety Unit in writing, giving the reason for breaking the seal and requesting the valve be examined, adjusted, and resealed.

[54 FR 37328, Sept. 8, 1989]

§ 121.59 Fusible plugs.

The inspector shall examine fusible plugs when inspecting the boilers. The number of such plugs inserted in each boiler, the manufacturer's name, and the heat number shall be included in the boiler inspection report.

§ 121.60 Water columns, test cocks, and water gages.

Water columns, test cocks, and water gages shall be carefully examined, tested and checked by the inspector at each inspection.

§ 121.61 Steam gages.

All steam gages connected to boilers or main steam lines shall be carefully checked for accuracy at each inspection.

§ 121.62 Safety valves or relief valves on reduced pressure lines, evaporators, etc.

Inspectors shall give the same attention and inspection to safety valves or relief valves installed on reduced pressure lines, evaporators, superheaters, feed water heaters, etc., as to the safety valves installed on the main boilers. The setting of such valves shall be carefully checked at each inspection and adjusted if necessary.

§ 121.63 Guards in dangerous places.

Inspectors shall examine all places where there is a possibility of a person being caught in machinery to see that they are provided with substantial guards over such mechanisms as gearings and couplings, flywheels or generators, refrigerating machinery, etc.

§ 121.64 Unfired pressure vessels.

(a) Unfired pressure vessels in service which are fitted with manholes or other inspection openings so that they can be satisfactorily examined internally, shall be opened biennially and thoroughly examined internally and externally.

(b) Unfired pressure vessels which have neither manholes nor inspection openings and cannot be satisfactorily examined shall be tested biennially to a hydrostatic test of one and one-fourth times the maximum allowable working pressure.

(c) Unfired pressure vessels shall be protected by a relief valve set to relieve at a pressure not exceeding that for which the vessel is designed, and of

sufficient relieving capacity to prevent a pressure increase exceeding 10 percent above the maximum allowable pressure. In no case shall the diameter of the relief valve be less than one-half inch.

(d) At each inspection period the inspector shall check the setting of the relief valves and make any adjustments that may be necessary to keep the pressure vessel within the maximum allowable pressure.

(e) As used in this part, ''unfired pressure vessel'' means a tank containing gas, vapor, or liquid, or a combination thereof, under pressure and not exposed to the products of combustion.

§121.65 Notice to the Marine Safety Unit of vessel on dock; alterations.

(a) Whenever any vessel under the supervision of the Marine Safety Unit is placed upon the dock for repairs it shall be the duty of the owner or responsible official to report same to the Marine Safety Unit so that a thorough inspection may be made to determine what is necessary to make such vessel seaworthy. No repairs or alterations affecting the safety of the vessel, either in regard to hull or machinery, shall be made without the knowledge and authority of the Marine Safety Unit. Notice of such repairs and alterations is necessary even if such work does not require the vessel to be placed in a drydock.

(b) When a repair or alteration ordered by the Marine Safety Unit has been completed the same shall be reported to the Marine Safety Unit in writing by the owner or responsible official.

[54 FR 37328, Sept. 8, 1989]

§121.66 Whistles.

Every inspected vessel under the supervision of the Marine Safety Unit shall be provided with an efficient whistle suitable for sounding the necessary whistle signals. Means shall be provided to operate the whistle from a position adjacent to the main steering station and from the remote steering station where such steering station is fitted. Details of the whistle operating devices shall meet the requirements of 46 CFR chapter I, subchapter J (Electrical Engineering).

[54 FR 37328, Sept. 8, 1989]

§121.67 Fog bells.

Inspected vessels 12 meters in length or greater, under the supervision of the Marine Safety Unit, shall be provided with an efficient fog bell. The bell, of corrosion resistant material, shall produce a clear tone at a sound pressure level of not less than 110 decibels at a distance of 1 meter. The diameter of the mouth of the bell shall not be less than 300mm for vessels of 20 meters or more in length, and shall be not less than 200mm for vessels of 12 meters to 20 meters in length. The mass of the striker shall not be less than 3 percent of the mass of the bell.

[54 FR 37329, Sept. 8, 1989]

§121.68 Engine signals; voice tubes.

Inspected vessels using bell signals between the pilot house and engine room shall have a tube, of proper size, so arranged as to return the sound of the bell signals to the pilot house, and shall also be provided with a speaking tube or other device for the purpose of conversation between the pilot house and engine room. In all cases where a telegraph is used the signal shall be capable of being repeated back to the pilot house.

§121.69 Proceeding to another port for repairs.

The Marine Safety Unit may issue a permit to proceed to another port for repairs, if in its judgment this can be done with safety. Such a permit shall state the conditions upon which it is granted.

[54 FR 37329, Sept. 8, 1989]

§121.70 Marking of draft on vessel.

All vessels 20 gross tons and over, under supervision of the Marine Safety Unit, shall have the draft of the vessel plainly and legibly marked upon the stem and upon the stern post or rudder post or at such other place at the stern of the vessel as may be necessary for easy observance. The draft shall be taken from the bottom of the lowest part of the keel to the surface of the

water, the bottom of the mark to indicate the draft in feet. Sufficient marks shall be used to cover all working and loading conditions of the vessel. If any part of the hull or permanent equipment extends below the lowest part of the keel, the master or other responsible person shall produce evidence from which the vessel's maximum immersion may be determined.

[54 FR 37329, Sept. 8, 1989]

§ 121.71 Emergency lighting system.

Provision shall be made on passenger vessels, tug boats and dredges for an electric system of lighting, sufficient for all requirements of safety, throughout the vessel. There shall be a self-contained electric source capable of supplying power when necessary. Emergency lights shall be tested at least once each week. The date of the tests required by this section shall be noted in the vessel's logbook.

[54 FR 37329, Sept. 8, 1989]

§ 121.72 Repairs to firefighting and lifesaving apparatus.

No extensive repairs or alterations, except in an emergency, shall be made to lifesaving or firefighting equipment without prior notice to the Marine Safety Unit.

[54 FR 37329, Sept. 8, 1989]

§ 121.73 Extra steering apparatus.

Extra steering apparatus consisting of relieving tackle, or of auxiliary power, or hand steering gear attached to the rudder stock independent of the regular steering gear shall be provided on vessels under jurisdiction of the Board.

§ 121.74 Repairs on boilers and unfired pressure vessels.

(a) Before undertaking repairs to a boiler or unfired pressure vessel, the engineer in charge of such vessel shall report the condition necessitating repairs and the nature of the proposed repairs to the Marine Safety Unit in writing.

(b) When damage occurs to boilers or pressure vessels through an accident that tends to render the further use of such boilers or pressure vessels unsafe until repairs are made, the engineer in charge thereof shall promptly report the facts of the accident and the proposed repairs to the Marine Safety Unit in writing.

(c) In cases requiring a written report under this section, repairs shall not commence until the Marine Safety Unit's Inspector has approved the proposed plan of repairs.

[54 FR 37329, Sept. 8, 1989]

§ 121.75 Increase in passenger allowance.

Increase in the passenger allowance of any vessel, whether specified in regular certificate or by special certificate for excursion, shall be permitted only after a careful inspection which shows that the vessel is properly equipped, and that the increase is safe and proper.

§ 121.76 Inclining test.

When the Marine Safety Unit has any reason to question the stability of any vessel under its supervision, it shall require the owners of the vessel to make inclining tests on such vessels, under the general supervision of the Marine Safety Unit.

[54 FR 37329, Sept. 8, 1989]

§ 121.77 Inspection of steam pipes.

When inspecting a vessel the inspectors shall carefully examine all steam pipes passing through woodwork, and if the same are deemed unsafe they shall be provided with an air space and fitted with metal collars.

§ 121.78 Deep-sea sounding apparatus.

All ocean passenger or freight steam vessels of 500 gross tons and upwards shall be equipped with an efficient mechanical deep-sea sounding apparatus ready for immediate use in addition to the ordinary deep-sea hand lead.

§ 121.79 Carrying of excess steam.

When it is known or comes to the knowledge of the Marine Safety Unit that any steam vessel is or has been carrying an excess of steam beyond that which is allowed by her certificate of inspection, the Marine Safety Unit shall require the owner of said vessel to place on the boiler a lockup safety valve, that will prevent the carrying of

an excess of steam, which shall be under the control of the Marine Safety Unit.

[54 FR 37329, Sept. 8, 1989]

§121.80 Signaling lamps.

Ocean and coastwise vessels of over 150 gross tons shall be equipped with an efficient signaling lamp. The lamp shall be so connected that it can be operated from the normal source of ship's current, the emergency source, and other emergency batteries if provided.

§121.81 Steering gear tests.

On all ocean vessels subject to the provisions of this part, making voyages of more than 48 hours duration, the entire steering gear, the whistle, the means of communication and signaling appliance between the bridge or pilot house and the engine room shall be examined and tested by a licensed officer of the vessel within a period of not more than 12 hours before leaving port. All such vessels making voyages of less than 48 hours duration shall be so examined and tested at least once in every week. The fact and time of such examination and test shall be recorded in the vessel's log book.

§121.82 Hatches.

The master of any vessel subject to this part shall assure himself before proceeding to sea that all exposed cargo hatches of his vessel are properly covered.

§121.83 Draft.

The master of every seagoing vessel subject to this part shall, whenever leaving port, enter the maximum draft of his vessel in the log book.

§121.84 Lookouts and fire patrolmen.

(a) Every vessel subject to this part shall have a lookout at all times at or near the bow during the nighttime.

(b) On every passenger vessel having berth or stateroom accommodations for passengers there shall be maintained an efficient watch by the fire patrol so as to cover all parts of the vessel accessible to passengers or crew, except machinery spaces, spaces occupied by passengers or crew as sleeping accommodations and cargo compartments which are inaccessible to passengers or crew while the passenger vessel is being navigated.

(c) A patrolman while on duty shall have no other tasks assigned to him and shall report to the bridge once every hour.

§121.85 Sanitation.

The master and chief engineer of any vessel under supervision of the Marine Safety Unit shall see that the vessel and the passenger and crew quarters are kept in a sanitary condition.

[54 FR 37329, Sept. 8, 1989]

§121.86 Fuel tanks; fuel piping.

Fuel tanks and fuel piping on vessels subject to this part shall be installed in accordance with the marine engineering regulations and material specifications of the United States Coast Guard, unless otherwise provided for in this part.

§121.87 Examination of boilers and machinery by engineer.

When an engineer assumes charge of the boilers and machinery of a vessel he shall examine the same immediately and thoroughly, and if he finds any part thereof in bad condition, he shall immediately report the fact to the master or employer and to the Marine Safety Unit, which shall thereupon investigate the matter to determine whether the former engineer has been negligent in his duties.

[54 FR 37329, Sept. 8, 1989]

§121.88 Fusible plug report.

The chief engineer of a steam vessel subject to this part shall report promptly to the Marine Safety Unit every renewal of every fusible plug in a boiler or boilers of a steam vessel upon which he is in charge as chief engineer.

[54 FR 37329, Sept. 8, 1989]

§121.89 Boiler steam hours.

(a) Boilers on floating equipment of the Panama Canal Commission which are inspected by the Marine Safety Unit may not be operated under steam for more than the following prescribed number of hours between boiler washout periods:

(1) Boilers which are operated under an approved system of boiler feed water conditioning and with respect to which copies of reports of boiler water conditioning are filed with the Marine Safety Unit: 2,880 hours.

(2) Condensing water-tube boilers not included within paragraph (d)(1) of this section: 1,050 hours.

(3) Fire and water tube boilers, no approved feed-water treatment, operating noncondensing: 750 hours.

(4) All other boilers: 2,160 hours.

(b) The chief engineer of the vessel shall report all washouts to the Marine Safety Unit on Form 1588–4 when the washout is completed and steam raised in a boiler. The original of this report shall be forwarded to the Marine Safety Unit and a copy to his master or employer.

[31 FR 12316, Sept. 16, 1966, as amended at 46 FR 63193, Dec. 30, 1981; 54 FR 37329, Sept. 8, 1989]

§ 121.90 Annual report of floating equipment on hand.

The accountable officials of the Panama Canal Commission shall furnish the Marine Safety Unit with an annual report of all vessels and floating craft on hand by January 1st of each year. This report shall show:

(a) The accountable official.

(b) The responsible official.

(c) The location of vessel or craft.

(d) The number or name of vessel or craft.

(e) The description of vessel or craft.

[54 FR 37330, Sept. 8, 1989]

§ 121.91 Inspectors not to accept statements.

Inspectors shall be governed by conditions as actually found by them and in no case shall they be justified in accepting the statements of others.

§ 121.92 Lifesaving apparatus.

Unless otherwise provided by this part, lifesaving apparatus for vessels subject to this part shall be in accordance with the requirements of the general rules and regulations for vessel inspection of the United States Coast Guard, or with the requirements of the International Convention for the Safety of Life at Sea.

[54 FR 37330, Sept. 8, 1989]

§ 121.93 Care of lifeboats.

At each inspection period lifeboats shall be stripped, cleaned, and thoroughly overhauled and painted. Tests and inspections shall be in accordance with the requirements of the U.S. Coast Guard rules and regulations for vessel inspection.

CROSS REFERENCE: Vessel inspection, rules and regulations of U.S. Coast Guard, see 46 CFR.

§ 121.94 Lifeboat equipment.

Lifeboats on board vessels subject to this part shall be equipped in accordance with the requirements of the general rules and regulations for vessel inspection service, the U.S. Coast Guard, or with the requirements of the international convention for the safety of life at sea, unless otherwise provided in this part.

CROSS REFERENCE: Vessel inspection, rules and regulations of U.S. Coast Guard, see 46 CFR.

§ 121.95 Line-throwing appliances and equipment.

(a) All ocean vessels shall be equipped with a line-throwing appliance of an approved type with the necessary equipment. The equipment shall include not less than four projectiles and four service lines.

(b) Vessels under 500 gross tons may use a shoulder gun. All coastwise vessels of 150 gross tons and over shall be equipped with a line-throwing appliance and equipment.

§ 121.96 Life preservers; number required.

All vessels shall be provided with one approved life preserver for each person carried. Passenger vessels shall be provided with an additional number suitable for children, equal to at least 10 percent of the total number of persons carried. They shall be properly distributed throughout the staterooms, berthings and other places convenient for passengers and crew.

§ 121.97 Life preserver inspection.

At each regular inspection of a vessel, and oftener if deemed necessary, the inspector shall examine and inspect all life preservers in accordance with the requirements of the U.S. Coast Guard rules and regulations for vessel inspection. If found to be satisfactory, they shall be plainly stamped with the word ''Passed,'' the date of inspection, and the inspector's initial.

CROSS REFERENCE: Vessel inspection, rules and regulations of U.S. Coast Guard, see 46 CFR.

§ 121.98 Means of escape from vessels.

(a) On all vessels where the plans and arrangements will possibly permit, all enclosures where passengers or crews may be quartered shall be provided with not less than two avenues of escape, so located that if one of such avenues is not available another may be.

(b) Every vessel of 50 tons or over carrying passengers shall be provided with permanent stairways forward and aft. Every vessel shall be provided with sufficient means of escape from lower to upper deck, or vice versa.

§ 121.99 Fire axes.

(a) All vessels shall be equipped with fire axes, as follows:

Gross tons	Axes
Over 25 tons and not over 50 tons	1
Over 50 tons and not over 200 tons	2
Over 200 tons and not over 500 tons	4
Over 500 tons and not over 1,000 tons	6
Over 1,000 tons	8

(b) All axes shall be located so as to be readily found in time of need, shall not be used for general purposes, and shall be kept in good condition.

(c) The vessel's name shall be marked on each ax handle.

[31 FR 12316, Sept. 16, 1966, as amended at 54 FR 37330, Sept. 8, 1989]

§ 121.100 Fire detecting and alarm system.

(a) All passenger vessels of more than 150 feet in length having berth or stateroom accommodations for passengers shall be provided with an efficient fire alarm or fire detecting system, which will automatically indicate or register at one or more points or stations, where it can be most quickly observed by officers and crew, the presence or indication of fire in any part of the vessel not accessible to a patrol system.

(b) All passenger vessels with sleeping quarters for passengers shall be provided with a manual fire alarm system which operates alarm bells in the pilot house and engine room. The manual alarm system shall have a suitable number of stations on all decks so as to enable the alarm to be given immediately in case of fire.

(c) All vessels over 100 gross tons shall have all sleeping accommodations equipped with a sufficient number of alarm bells so located as to warn all occupants. The alarm bells, if electric, shall be operated from an open switch in the pilot house or bridge. The bells shall be of such size and character as to provide an alarm throughout the spaces for which they are provided.

§ 121.101 Steam and inert-gas fire extinguishing systems, fire pumps, outlets and hoses.

Steam and inert-gas fire extinguishing systems, fire pumps, fire pump outlets and hoses shall be provided on passenger and cargo vessels in accordance with the requirements of the U.S. Coast Guard general rules and regulations for vessel inspection, or, with the requirements of the international convention for the safety of life at sea; unless otherwise provided in this part.

§ 121.102 Portable fire extinguishers.

All vessels subject to this section shall be provided with good and efficient U.S. Coast Guard approved marine portable fire extinguishers. The number and type required shall be determined by the Marine Safety Unit.

[54 FR 37330, Sept. 8, 1989]

§ 121.103 Station bills.

The master of every vessel of 150 gross tons or over shall have station bills prepared and posted in conspicuous places in several parts of the vessel, particularly in the crews quarters. They must contain full particulars of the signals which will be used for calling the crew to their stations for emergency duties, and indicate the station to which each man must go and the duties he has to perform.

§ 121.104 Fire alarm signals; drills.

(a) The general fire alarm signal shall be a continuous rapid ringing of the ship's bell for a period of not less than 10 seconds, supplemented by the continuous ringing of the general alarm bells for not less than 10 seconds. For dismissal from fire alarm stations, the general alarm bells shall be sounded three times.

(b) The officer in command shall, once at least in each week, call all hands to quarters and exercise them in the unlashing and swinging out of the life boats, weather permitting, the closing of all water tight doors and fire doors, the use of fire pumps and all other apparatus for the safety of life on board such vessels, and to see that all the equipment required is in good working order for immediate use. Special attention shall be given to drilling the crew and educating passengers in the method of adjusting life preservers and condition of same. The fact of the exercise of the crew shall be entered on the vessel's log book giving the hours and days such drills were held.

(c) The inspectors shall observe the drills at intervals sufficiently frequent to assure themselves that the requirements of this section are complied with.

(d) Three copies of this section shall be furnished vessels. The copies furnished shall be framed under glass, and posted in conspicuous places about the vessel.

§ 121.105 Fire hazards, and fire extinguishing equipment.

(a) At each inspection period the inspector shall examine the tank tops and bilges in the machinery spaces to see that there is no accumulation of oil which might create a fire hazard.

(b) At each inspection period the inspector shall conduct tests and inspections of fire extinguishing equipment in accordance with the requirements of the U.S. Coast Guard rules and regulations for vessel inspection.

§ 121.106 Fire-fighting equipment on steam propelled vessels.

Each fire room of a steam propelled vessel burning oil for fuel shall contain:

(a) A metal receptacle containing not less than five (5) cubic feet of sand, and scoop or shaker for distributing same; and

(b) Two or more approved fire extinguishers of the foam type of not less than 2 ½-gallon capacity each, or two or more carbon-dioxide (CO_2) type of not less than 15 pounds each, accessible to the fire room and ready for immediate use. These extinguishers shall be in addition to the regular extinguishers required for the vessel.

§ 121.107 Non-self-propelled vessels; equipment.

Panama Canal non-self-propelled vessels shall carry the following equipment:

(a) *Dredges, floating cranes, and drill boats:*

4 Life rings (2 luminous), U.S. Coast Guard approved.

1 Life preserver for each person on board, U.S. Coast Guard approved.

1 Fire pump. Outlets from fire mains to be so arranged that one 50–foot length of hose can reach any part of the vessel.

6 Portable fire extinguishers.

4 Fire axes.

1 Anchor and anchor chain as approved by the Marine Safety Unit.

Lights and day marks as required by § 111.27 (Rule 27, 72 COLREGS).

(b) *Floating pile drivers:*

2 Life rings (1 luminous), U.S. Coast Guard approved.

1 Life preserver for each person on board, U.S. Coast Guard approved.

2 Fire axes.

2 Portable fire extinguishers.

1 Anchor and anchor chain as approved by the Marine Safety Unit.

Lights and day marks as required by § 111.27 (Rule 27, 72 COLREGS).

(c) *Barges, lighters and scows:*

1 Life ring, U.S. Coast Guard approved.

1 Suitable anchor with cable.

1 Life preserver for each person on board, U.S. Coast Guard approved.

Lights as required by part 111 of this chapter and Rule 24 (72 COLREGS).

1 Stern light, white, and so fixed as to show the light 67.5 degrees from right aft on each side, an arc of 135 degrees, visibility of 3 miles.

1 Each sidelight, green starboard and red port, showing an unbroken light over an arc of the horizon of 112.5 degrees and so fixed as

to show the light from right ahead to 22.5 degrees abaft the beam on its respective side, visibility of 3 miles.

1 Diamond black shape (on tows exceeding 200 meters) for daylight display where best seen.

(d) *Inconspicuous, partly submerged vessels or objects, or combination of such vessels or objects being towed, shall exhibit:*

(1) White, 32–point, 3–mile lights, one at or near the forward end and one at or near the after end, if less than 25 meters in breadth, except that dracones need not exhibit a light at or near the forward end;

(2) In vessels 25 meters or more in breadth, two additional all-round white lights at or near the extremities of its breadth;

(3) In vessels more than 100 meters in length, additional all-round white lights between the lights prescribed in paragraphs (d) (1) and (2) of this section so that the distance between the lights shall not exceed 100 meters;

(4) A diamond shape at or near the aftermost extremity of the last vessel or object being towed; and, if the length of the tow exceeds 200 meters, an additional diamond shape where it can best be seen and located as far forward as is practicable.

[31 FR 12316, Sept. 16, 1966, as amended at 54 FR 37330, Sept. 8, 1989]

§ 121.108 Complement of officers and crew.

A certificate of inspection will not be granted to a vessel unless it has in service and on board such complement of officers and crew as may, in the judgment of the Marine Safety Unit, be necessary for safe navigation.

[54 FR 37330, Sept. 8, 1989]

MOTORBOATS

§ 121.131 Equipment on motorboats.

(a) Motorboats less than 7 meters (23′) in length shall carry the following equipment:

2 Oars or paddles.

1 Whistle.

1 Bailer.

20 Meters (65′) of manila line, not less than 15mm (⅝″) diameter, or synthetic line of comparable strength.

2 Fire extinguishers, either 1¼ gallon foam, 4-lb. CO–2, or 2-lb. dry chemical, when engine is inboard, or one such extinguisher, if fixed system installed in engine space or if the engine is outboard. Extinguishers to be U.S. Coast Guard approved.

1 Combination light showing red to port and green to starboard or individual red and green side lights, visibility of one mile.

1 Stern light or all-round white light, visibility of two miles.

1 Anchor and suitable cable, 40 meters (130′).

1 Red flag.

1 Life preserver for each person carried, U.S. Coast Guard approved.

1 Copy of the ''Motorboat Operator's Handbook''.

(b) Motorboats 7 meters (23′) or over and less than 12 meters (40′) in length shall carry the following equipment:

1 Life ring buoy of not less than 600mm (24″) outside diameter, U.S. Coast Guard approved.

1 Whistle, power-operated, audible at least one mile.

1 Bailer.

20 Meters (65′) of manila line, not less than 18mm (¾″) diameter, or synthetic line of comparable strength.

3 Fire extinguishers, 2 of which shall be 2½ gallon foam, 15-lb. CO–2, or 10-lb. dry chemical. The third extinguisher shall be 1¼ gallon foam, 4-lb. CO–2, or 2-lb. dry chemical. This third extinguisher is not required if a fixed system is installed in the engine space. Extinguishers to be U.S. Coast Guard approved.

1 Boat hook.

1 Combination light showing red to port and green to starboard, or individual red and green side lights, visibility one mile.

1 Stern light or all-round white light, visibility of two miles.

1 Anchor and suitable cable, 40 meters (130′).

1 Red flag.

1 Red lantern.

1 Life preserver for each person carried, U.S. Coast Guard approved.

1 Copy of the ''Motorboat Operator's Handbook''.

(c) Motorboats 12 meters (40′) or over and not more than 20 meters (65′) in length shall carry the following equipment:

2 Life ring buoys not less than 600mm (24″) in outside diameter, U.S. Coast Guard approved.

1 Approved fog horn.

1 Whistle, power-operated, audible at least one mile.

1 Bailer.

25 Meters (82′) of manila line, not less than 21mm (⅞″) diameter, or synthetic line of comparable strength.

4 Fire extinguishers, 3 of which shall be 2½ gallon foam, 15-lb. CO–2, or 10-lb. dry chemical. The fourth extinguisher may be 1¼ gallon foam, 4-lb. CO–2, or 2-lb. dry chemical. This fourth extinguisher is not required if a fixed system is installed in engine space. Extinguishers to be U.S. Coast Guard approved.

2 Boat hooks.

1 Masthead light, white, 225 degrees, fixed to show the light from right ahead to 22.5 degrees abaft the beam on either side, minimum 2.5 meters above the gunwale, visibility three miles.

1 Combination light showing red to port and green to starboard or individual red and green sidelights, visibility two miles.

1 Stern light, white, 135 degrees, placed as nearly as practicable at the stern, and so fixed to show the light 67.5 degrees from right aft on each side, visibility two miles.

2 Emergency lights, red and all-round in a vertical line where they can best be seen, visibility two miles (daylight: two black balls) used when restricted in ability to maneuver.

1 Red lantern.

1 Red flag.

1 Anchor with 40 meters (130′) suitable cable.

1 Fog bell.

1 Life preserver for each person carried, U.S. Coast Guard approved.

1 Copy of the ''Motorboat Operator's Handbook''.

(1) Pilot vessels only:

2 Lights at or near the masthead, one all-round white upper and one all-round red lower not less than one meter apart, visibility two miles.

(2) For those vessels engaged in towing and pushing:

2 Masthead lights in a vertical line. When the length of the tow, measured from the stern of the towing vessel to the after end of the tow, exceeds 200 meters, three such lights in a vertical line (daylight: a black diamond shape where it can best be seen).

(d) Cayucos or piraguas less than 20 meters (65 feet) in length and equipped with an outboard motor or motors and operating in Madden and Gatun Lakes shall carry the following equipment:

2 Oars or paddles.

1 Whistle.

1 Bailer.

20 Meters (65′) of manila line, not less than 21mm (⅞″) diameter, or synthetic line of comparable strength.

1 Flashlight.

1 Red flag.

1 Life preserver for each person carried, U.S. Coast Guard approved.

1 Copy of the ''Motorboat Operator's Handbook''.

(e) Life preservers, ring buoys and fire extinguishers required by this section shall be U.S. Coast Guard approved and shall be permanently marked with the name of the motorboat on which they are carried.

[54 FR 37330, Sept. 8, 1989]

§ 121.132 Motorboat filling, venting, and sounding pipes; shut-off valves.

(a) Filling, venting, and sounding pipes shall be so arranged that vapors or possible overflow when filling cannot escape to the inside of the hull but will run overboard. A pipe made tight to the tank and to the filling plate on deck clear of any coamings, etc., meets this requirement. Filling and sounding pipes shall extend to within one-half their diameter from the bottom of the tank. A flame screen of noncorrodible wire mesh shall be fitted in the throat of the fill pipe.

(b) Shut-off valves shall be installed in the fuel line; one as close to each tank as practicable, and one as close to each carburetor as practicable. Arrangements shall be provided for operating all shut-off valves at the tanks from outside the compartments in which they are located, preferably from an accessible position on deck. The operating gear for the shut-off valves at the tanks shall be accessible at all times and in efficient working condition.

§ 121.133 Carburetor back-fire flame arrestor.

Carburetors of engines installed on motorboats using gasoline for fuel, except outboard motors, shall be fitted with an approved device to arrest back-fire. Air intakes, where practicable, shall be so directed that back-fire cannot blow down into the bilge.

§ 121.134 Ventilation of motorboats.

(a) All motorboats which use gasoline or other liquid fuel having a flash point of less than 110° F. shall be provided with at least two ventilators fitted with cowls or their equivalent for the

purpose of properly and efficiently ventilating the bilges of every engine and fuel tank compartment in order to remove any inflammable or explosive gases.

(b) Motorboats constructed so that the greater portion of the bilges under the engine and fuel tanks are open and exposed to the natural atmosphere at all times are not required to be fitted with ventilators.

Subpart C—Registration and Numbering

§121.171 Registration and numbering of motorboats.

All motorboats shall be registered, certificated, and assigned numbers by the Marine Safety Unit.

[54 FR 37331, Sept. 8, 1989]

§121.172 Numbers to be displayed on motorboats.

Every motorboat shall have its assigned number painted or attached on each bow. The numbers shall be in block character of not less than 3 inches in height, and located as high above the water line as practicable, but in no case shall there be less than 3 inches of space from the bottom of the numbers to the water.

§121.173 Registration and numbering of vessels under 20 meters (65′) in length not propelled by machinery.

Vessels not more than 20 meters (65′) in length and not propelled in whole or in part by machinery shall be registered and numbered by the Marine Safety Unit.

[54 FR 37331, Sept. 8, 1989]

§121.174 Numbers to be displayed on vessels under 65 feet other than motorboats.

Every vessel not more than 65 feet in length and not propelled in whole or in part by machinery shall have its assigned number painted or attached on each bow. The numbers shall be in block character of not less than 3 inches in height, and located as high above the water line as practicable, but in no case shall there be less than 3 inches of space from the bottom of the numbers to the water.

PART 123—RADIO COMMUNICATION

Sec.
123.1 Radio communication defined.
123.2 Control of communications.
123.3 Radiotelephones required.
123.4 Advance notification required by radio from vessels approaching the Canal.
123.5 Radio communication between vessels in Canal waters and other vessels or places.
123.7 Operator on board during transit.
123.8 Precedence of messages relative to vessel's movements and Canal business; use of vessel's radio by pilot.
123.9 Immediate report of accidents, delays, or casualties.
123.10 Operation of vessel radios in conformity with treaties.
123.11 Radio charges.

AUTHORITY: Issued under authority of the President by 22 U.S.C. 3811; E.O. 12215, 45 FR 36043.

SOURCE: 31 FR 12322, Sept. 16, 1966, unless otherwise noted.

§123.1 Radio communication defined.

For the purposes of this part, unless the context otherwise requires, ''radio communication'' means the transmission by radio of writing, signs, signals, pictures, and sounds of all kinds, including all instrumentalities, facilities, apparatus, and services (among other things the receipt, forwarding, and delivery of communications) incidental to such transmission.

§123.2 Control of communications.

The Panama Canal Commission shall, subject to the provisions of this part, have control of radio communications in the Canal operating areas so far as concerns or affects vessels in Panama Canal waters or the navigation of such waters.

[46 FR 63193, Dec. 30, 1981]

§123.3 Radiotelephones required.

(a) Except for vessels operated by the Panama Canal Commission or another agency of the United States, the following vessels shall comply with the requirements of this section:

(1) Every power-driven vessel of 300 gross tons or over;

(2) Every power-driven vessel of 100 gross tons or over, carrying one or more passengers for hire; and

(3) Every commercial towing vessel of 26 feet in length or over.

(b) A vessel of a type described in paragraph (a) of this section shall be equipped with a radiotelephone which can be operated from the navigation bridge and which can be used to communicate on the following channels in the 156–162 MHz frequency band:

(1) Channel 12, 156.600 MHz;

(2) Channel 13, 156.650 MHz;

(3) Channel 16, 156.800 MHz.

(c) A vessel of a type described in paragraph (a) of this section, which has notified the Traffic Management Division that it is ready to transit or otherwise navigate in Panama Canal waters and requires a Panama Canal pilot, shall, until a pilot boards the vessel, maintain a continuous watch on Channel 12. Channel 12 will be used for notification to vessels of their transit time and for advisory harbor control communication in Limon Bay.

(d) A vessel of a type described in paragraph (a) of this section shall maintain a continuous watch on Channel 13 when under way in Panama Canal waters for bridge-to-bridge navigational communications only. One watt maximum power shall be used on that frequency, except that in emergencies or unusual circumstances more power may be used. When such vessels have a Panama Canal pilot aboard, Channel 13 may be used only by the pilot or at his direction for navigational communications.

(e) The Signal Stations on Flamenco Island and in Cristobal may be called on Channel 12 or 16. Channel 16, however, is reserved for cases of distress, urgency, safety and calling only. Once radio contact is established on Channel 16, another channel should be selected for routine communications.

[41 FR 21778, May 28, 1976, as amended at 46 FR 63193, Dec. 30, 1981; 48 FR 6709, Feb. 15, 1983; 54 FR 37331, Sept. 8, 1989]

§ 123.4 Advance notification required by radio from vessels approaching the Canal.

(a) Vessels approaching the Panama Canal shall communicate by radio to the Traffic Management Division not less than 48 hours in advance of arrival at the Canal (or earlier if radio communication is practicable at an earlier time), the information required by this section unless this information has been previously communicated to the Canal authorities by other means. Symbols of the phonetic alphabet shall be used to identify each item and the word ''NEGAT'' shall be used after the items that can be answered ''no'', ''none'', or ''not applicable''. The following items of information shall be provided.

ALFA—The Panama Canal Identification Number of the vessel.

BRAVO—Estimated date and time of arrival, port of arrival and request for Canal transit if desired.

CHARLIE—Estimated draft upon arrival, and estimated transit draft if scheduled to work cargo or take bunker prior to transiting, in meters, fore and aft, in Tropical Fresh Water.

DELTA—Any changes in the vessel's name, country of registry, structure or use of tanks that have occurred since the vessel last called in Panama Canal waters.

ECHO—Will the vessel dock at Balboa or Cristobal? What is the reason for docking? If it is for cargo operations, fuel or water, give the tonnage involved in each case. Is there any other reason the vessel will not be ready to transit upon arrival? What is the reason?

FOXTROT—The nature and tonnage of any deck cargo.

GOLF—If the vessel is carrying any explosives or bulk dangerous cargoes, as classified in § 113.3, state the technical name, quantity (in long tons), United Nations number, the International Maritime Organization class and division (include compatibility group for explosives only), and the stowage for each dangerous cargo carried. If the vessel is a tanker in ballast condition and not gas free, state the technical name, United Nations number and the International Maritime Organization class and division of the previously carried cargo. Tankers reporting ''GOLF:NEGAT'' shall, in addition, state the technical names of non-dangerous cargoes carried.

HOTEL—If the vessel is carrying any packaged dangerous goods, as specified in § 113.3, other than explosives, state the International Maritime Organization class and division and the total quantity (in long tons) within each class.

INDIA—Quarantine and immigration information:

(1) Is radio pratique desired?

(2) State the ports at which the vessel has called within 15 days preceeding its arrival at the Canal.

(3) State all cases of communicable disease aboard and the nature of the disease or diseases, if known.

(4) The number of deaths which have occurred since departure from the last port and the cause of each death, if known.

(5) The number of passengers disembarking and their port of disembarkation.

(6) The number and ports of origin of any stowaway and a brief description of the identity papers of each stowaway.

(7) The number, kind and country of origin of any animals aboard. Are any animals to be landed?

(8) The country of origin of all meat, whether carried as cargo or as ship's stores.

(9) Has the vessel called at a port in any country infected with foot-and-mouth disease or rinderpest during its present voyage? Countries considered to be infected are:

(a) All countries east of the 30th meridian west longitude and west of the international date line, except Australia, Channel Islands, Fiji, Greenland, Iceland, Japan, New Zealand, Northern Ireland, Norway, Republic of Ireland;

(b) All countries of South America;

(c) Curacao (the leeward islands of the Netherlands Antilles);

(d) Martinique;

(e) Cuba;

(f) Guadaloupe.

(10) Specify whether the vessel has a valid deratting certificate or a deratting exemption certificate issued 180 days prior to arrival.

(b) The following additional information shall be transmitted via radio to Transit Operations Division from all vessels as applicable:

(1) Vessels approaching from the Pacific shall report actual time of passing Cape Mala, or the latitude of Cape Mala, and the vessel's speed.

(2) Vessels approaching from the Atlantic shall report 12 hours prior to arrival at Cristobal any change of one hour or more in the expected time of arrival.

(3) Any other matters of importance and interest.

(c) Timely receipt of the above information will facilitate the transit or docking of arriving vessels. Failure to comply with these reporting requirements may subject a vessel to delay since vessels which do comply will receive priority of service and handling over those which do not.

(Approved by the Office of Management and Budget under control number 3207–0001)

[31 FR 12322, Sept. 16, 1966, as amended at 38 FR 3963, Feb. 9, 1973; 40 FR 8348, Feb. 27, 1975; 41 FR 21778, May 28, 1976; 46 FR 63193, Dec. 30, 1981; 50 FR 19682, May 10, 1985; 54 FR 37331, Sept. 8, 1989; 61 FR 36498, July 11, 1996]

§123.5 Radio communication between vessels in Canal waters and other vessels or places.

Except for emergency traffic and routine bridge-to-bridge VHF communication, no vessel in transit through the Canal shall communicate by radio with any other vessel or shore station, local or distant. This restriction shall not apply to government vessels of the United States or of the Republic of Panama.

[46 FR 63193, Dec. 30, 1981]

§123.7 Operator on board during transit.

All vessels equipped with radio shall have a qualified radio operator on board, available to operate the radio installation if necessary, at any time the vessel is under way in Panama Canal waters and at any other time her navigation is under the control of a Panama Canal pilot. Vessels equipped with radio telephones operating on the frequencies designated by the Panama Canal Commission are deemed to meet the requirements of this section provided they have someone aboard capable and qualified to operate such equipment.

[46 FR 63194, Dec. 30, 1981; 47 FR 54072, Dec. 1, 1983]

§123.8 Precedence of messages relative to vessel's movements and Canal business; use of vessel's radio by pilot.

Messages relating to a vessel's movements and Canal business shall take precedence over all commercial messages. The pilot on a vessel passing through the Canal shall be afforded free use of the vessel's radio for the transaction of Canal business.

§123.9 Immediate report of accidents, delays, or casualties.

Vessels within Panama Canal waters shall report by radio to the Canal authorities any accident or anything else that may delay them or require assistance, any sickness or casualties that require medical attendance or any other matter of importance that may arise. If a pilot is on board, such report

shall be made by the pilot or under his direction.

[46 FR 63194, Dec. 30, 1981]

§ 123.10 Operation of vessel radios in conformity with treaties.

Except as may be otherwise provided by this part, while in Panama Canal waters, vessels equipped with radio shall operate such equipment at all times in conformity with the principles and rules stipulated in the treaties or conventions to which the United States is a party.

[46 FR 63194, Dec. 30, 1981]

§ 123.11 Radio charges.

No receiving or relaying charges, will be imposed against ships on radiograms transmitted by ships on Canal business nor in the cases of dispatches involving medical assistance to ships.

PART 125—SANITARY REQUIREMENTS: VESSEL WASTES; GARBAGE; BALLAST

Sec.
125.1 Discharging vessel wastes into waters.
125.2 Handling ballast.
125.4 Removing wastes when anchored for considerable time.

AUTHORITY: Issued under authority vested in the President by secs. 1701 and 1801, Pub. L. 96–70, 93 Stat. 492; EO 12215, 45 FR 36043.

§ 125.1 Discharging vessel wastes into waters.

(a) Vessels may not discharge or throw into Panama Canal waters any ballast, ashes, cinders, boxes, barrels, straw, paper, or other solid matter; nor discharge heavy slops, engine or fire room bilge water, oil, or any other matter that will tend to deface or make Canal waters unsanitary. This requirement does not apply to the water used in cooking or in cleaning tableware.

(b) Ballast tanks may not be discharged in Canal waters.

(c) Before arrival from sea at either of the terminal ports, vessels should, in a manner consistent with the requirements of the International Convention for the Prevention of Pollution of the Sea by Oil, 1954, and all amendments thereto which are currently in force, dispose of all waste forbidden to be discharged in Canal waters.

[46 FR 63194, Dec. 30, 1981]

§ 125.2 Handling ballast.

Vessels wishing to unload or load ballast must have proper chutes, so arranged as to prevent ballast from falling overboard.

[31 FR 12324, Sept. 16, 1966]

§ 125.4 Removing wastes when anchored for considerable time.

A vessel anchored in Panama Canal waters for a considerable length of time may get rid of vessel wastes by requesting Canal authorities to place a garbage scow alongside. This service is chargeable to the vessel.

[46 FR 63194, Dec. 30, 1981]

PART 131—NEUTRALITY OF CANAL

§ 131.1 Applicability of Treaty.

Matters concerning the neutrality of the Panama Canal are governed by the Treaty Concerning the Permanent Neutrality and Operation of the Panama Canal, signed in Washington, D.C., on September 7, 1977.

(Treaty Concerning the Permanent Neutrality and Operation of the Panama Canal, signed September 7, 1977)

[46 FR 63194, Dec. 30, 1981]

PART 133—TOLLS FOR USE OF CANAL

Subpart A—Rates of Toll

Sec.
133.1 Rates of toll.

Subpart B—Levying of Tolls

133.31 Measurement of vessels; vessels to secure tonnage certificate.
133.32 Measurement of vessels; making and correction of measurement; plans and copies.
133.33 Measurement of vessels; temporary retention of certificate at Canal.
133.34 Tolls for vessels in ballast.
133.36 Tolls for vessels making partial transit and return.
133.37 Partial transits by small vessels.

Subpart C—Payment of Tolls and Other Vessel Charges

133.71 Time of making payment.
133.72 Same; exception; vessels operated by the United States.
133.73 Payment to be in cash.
133.74 Same; exception; payment secured by deposit of cash or bonds.
133.75 To whom payment is to be made.

AUTHORITY: 22 U.S.C. 3791–3792, 3794.

SOURCE: 31 FR 12326, Sept. 16, 1966, unless otherwise noted.

NOTE: Section 133.1; Presidential Proc. 2247, 2 FR 2061, Aug. 25, 1937, as amended by Presidential Proc. 2249, 2 FR 2099, Aug. 31, 1937, §§133.31, 133.32; Rules 14, 15, E.O. 4314, Sept. 25, 1925. §133.34: Rule 16, E.O. 4314, Sept. 25, 1925; §§133.35, 133.36. E.O. 8068, 4 FR 1258, Mar. 21, 1939. §§133.71–133.75; Resolution of Board of Directors, Panama Canal Company, Oct. 9, 1954. Provisions of Presidential Proc. and E.O. continue in force by virtue of sec. 19 of Oct. 18, 1962, 76A Stat. 1, 700.

Subpart A—Rates of Toll

§133.1 Rates of toll.

The following rates of toll shall be paid by vessels using the Panama Canal:

(a) On merchant vessels, yachts, army and navy transports, colliers, hospital ships, and supply ships, when carrying passengers or cargo, $2.39 per PC/UMS Net Ton—that is, the Net Tonnage determined in accordance with part 135 of this chapter, effective January 1, 1997, and $2.57 per PC/UMS Net Ton, effective January 1, 1998.

(b) On vessels in ballast without passengers or cargo, $1.90 per PC/UMS Net Ton, effective January 1, 1997, and $2.04 per PC/UMS Net Ton, effective January 1, 1998.

(c) On other floating craft including warships, other than transports, colliers, hospital ships, and supply ships, $1.33 per ton of displacement, effective January 1, 1997, and $1.43 per ton of displacement, effective January 1, 1998.

[61 FR 60612, Nov. 29, 1996]

Subpart B—Levying of Tolls

§133.31 Measurement of vessels; vessels to secure tonnage certificate.

The rules for the measurement of vessels are fixed by part 135 of this chapter. Vessels desiring to transit the Canal shall provide themselves with a tonnage certificate in accordance with §133.32.

[59 FR 43254, Aug. 22, 1994]

§133.32 Measurement of vessels; making and correction of measurements; plans and copies.

Measurements may be made by the admeasurers of the Canal or certain other officials worldwide as designated by the Panama Canal Commission. Each transiting vessel should have aboard and available to Canal authorities a full set of plans and a copy of the measurements which were made at the time of issue of its International Tonnage Certificate (1969), as well as the tonnage certificate itself. A copy of the International Tonnage Certificate (1969) shall be provided to Canal authorities. The Commission reserves the right to check and correct the total volume that is to be used in the calculation of the PC/UMS Net Tonnage.

(Approved by the Office of Management and Budget (OMB) under control number 3207–0001)

[59 FR 43254, Aug. 22, 1994]

§133.33 Measurement of vessels; temporary retention of certificate at Canal.

The official PC/UMS Net Tonnage certificate shall be delivered by the Canal authorities to the vessel or to the owner or agent of the vessel after transit completion. This certificate shall be retained on board the vessel and shall be used to certify that the vessel has been inspected and its PC/UMS Net Tonnage has been determined by the Commission.

[59 FR 43254, Aug. 22, 1994]

§133.34 Tolls for vessels in ballast.

In order for a vessel to secure the reduced rate of toll for vessels in ballast, it may not be carrying any passengers or cargo nor any fuel for its own consumption in a quantity which exceeds the spaces on the vessel which are available for the carriage of fuel (i.e., the actual volume of tanks or fixed compartments, including settling tanks, used for the storage of lubricating oil or fuel, which spaces cannot be used to stow cargo or stores and which

have been certified by official marking to be spaces for the vessel's own fuel).

[54 FR 35148, Aug. 23, 1989; 54 FR 36096, Aug. 31, 1989]

§ 133.36 Tolls for vessels making partial transit and return.

Vessels passing through the locks at either end of the Panama Canal and returning to the original point of entry without passing through the locks at the other end of the Canal, shall pay the tolls prescribed for a single passage through the Canal. In case such vessels carry cargo or passengers either in passing or returning through the locks, the rate of tolls on laden vessels shall apply.

§ 133.37 Partial transits by small vessels.

Section 133.36 shall not be interpreted as authorizing vessels less than 65 feet in length, or barges, or rafts of any size not on regular transit schedules and not paying tolls, to navigate the waters of any locks, or of Gaillard Cut to or from Gatun Lake in partial transit of the Canal; specific authority of the Administrator must be obtained through the Marine Director for each such partial transit.

[46 FR 63194, Dec. 30, 1981]

Subpart C—Payment of Tolls and Other Vessel Charges

§ 133.71 Time of making payment.

(a) Payment of tolls in full shall be made, or secured as provided by § 133.74, before a vessel is permitted to enter a lock.

(b) All vessel charges shall be paid, or secured as provided by § 133.74, before permission to depart is given a vessel at the port of departure from the Canal: *Provided, however,* That in cases involving emergency or other special circumstances, the requirement of this paragraph may be waived by the Administrator of the Panama Canal Commission.

[31 FR 12326, Sept. 16, 1966, as amended at 46 FR 63194, Dec. 30, 1981]

§ 133.72 Same; exception; vessels operated by the United States.

Section 133.71 shall not apply to vessels operated by the Government of the United States; and bills for tolls, where applicable, and for other charges against such vessels, shall be settled as are other obligations between agencies of the Federal Government.

§ 133.73 Payment to be in cash.

All payments for tolls and other charges shall be made in cash, in lawful money of the United States, except as provided in by § 133.74.

§ 133.74 Same; exception; payment secured by deposit of cash or bonds.

(a) The payment of tolls and vessel charges may be secured by making cash deposits for that purpose with the Treasurer of the Panama Canal Commission or such United States depository as may be designated by the Panama Canal Commission.

(b) In lieu of payment in cash or a cash deposit, the payment of tolls and vessel charges may be secured by making deposits, pursuant to written agreement with the Panama Canal Commission, of negotiable bonds of the United States Treasury Department as collateral security for the deposit of public moneys. Such bonds shall be under the full control of the Panama Canal Commission; shall be deposited with the Treasurer of the Panama Canal Commission or such United States depository as may be designated by the Panama Canal Commission and shall be subject to sale or other disposition by the Panama Canal Commission upon any failure in prompt payment of any bill for tolls or vessel charges for which the said bonds are deposited as security.

[46 FR 63194, Dec. 30, 1981]

§ 133.75 To whom payment is to be made.

Payment for tolls and vessel charges shall be made to the Treasurer, Panama Canal Commission.

[46 FR 63195, Dec. 30, 1981]

PART 135—RULES FOR MEASUREMENT OF VESSELS

Subpart A—General Provisions

Sec.
135.1 Scope.
135.2 Vessels generally to present tonnage certificate or be measured.
135.3 Determination of total volume and VMC.
135.4 Administration and interpretation of rules.

Subpart B—PC/UMS Net Tonnage Measurement

135.11 Tonnage.
135.12 Definitions.
135.13 Determination of PC/UMS Net Tonnage.
135.14 Change of PC/UMS Net Tonnage.
135.15 Calculation of volumes.
135.16 Measurement and calculation.

Subpart C—Warships, Dredges and Floating Drydocks

135.21 Warships, dredges and floating drydocks to present documents stating displacement tonnage.
135.22 Tolls on warships, dredges and floating drydocks levied on actual displacement.

Subpart D—Transitional Relief Measures

135.31 Transitional relief measures.

Subpart E—Alternative Method for Measurement of Vessels

135.41 Measurement of vessels when volume information is not available.
135.42 Measurement of vessels when tonnage cannot be otherwise ascertained.

AUTHORITY: 22 U.S.C. 3791–3792, 3794.

SOURCE: 59 FR 43255, Aug. 22, 1994, unless otherwise noted.

Subpart A—General Provisions

§135.1 Scope.

This part establishes the procedures for determining the Panama Canal Universal Measurement System (hereinafter PC/UMS) Net Tonnage. The tonnage shall be used to assess tolls for use of the Panama Canal. Also, the tonnage may be used, when adequate volume information is not provided, to assess the charge for admeasurement services.

§135.2 Vessels generally to present tonnage certificate or be measured.

All vessels except warships, floating drydocks, dredges, and vessels subject to transitional relief measures, applying for passage through the Panama Canal shall present a duly authenticated International Tonnage Certificate (1969) (hereinafter ITC 69), or suitable substitute (i.e., a certificate derived from a system which is substantially similar to that which was provided for in the 1969 International Convention on Tonnage Measurement of Ships, and which contains the total volume or allows for the direct mathematical determination of total volume). Vessels without such total volume information shall be inspected by Canal authorities who shall determine an appropriate volume for use in the calculation of a PC/UMS Net Tonnage of such vessels. In addition, these same vessels shall provide documentation, such as plans and classification certificates, with sufficient information to determine the volume of the maximum capacity of containers that may be carried on or above the upper deck, or VMC as defined in section 135.13(a)(11).

(Approved by the Office of Management and Budget (OMB) control number 3207–0001)

[59 FR 43255, Aug. 22, 1994, as amended at 61 FR 60612, Nov. 29, 1996]

§135.3 Determination of total volume and VMC.

(a) Determination of total volume and VMC used to calculate PC/UMS Net Tonnage shall be carried out by the Panama Canal Commission. In so doing, however, the Commission may rely upon total volume and VMC information provided by such officials as are authorized by national governments to undertake surveys and issue national tonnage certificates. Total volume and VMC information presented to the Commission shall be subject to verification, and if necessary, correction as necessary to ensure accuracy to a degree acceptable to the Commission.

(b) The Commission may, when it is deemed necessary to verify information contained on the ITC 69, require the submission of additional documents. Failure to submit the requested

documentation may result in the Commission's developing a figure that accurately reflects the vessel's volume.

(Approved by Office of Management and Budget (OMB) under control number 3207–0001)

[59 FR 43255, Aug. 22, 1994, as amended at 61 FR 60612, Nov. 29, 1996]

§ 135.4 Administration and interpretation of rules.

The rules of measurement provided in this part shall be administered and interpreted by the Administrator of the Panama Canal Commission.

Subpart B—PC/UMS Net Tonnage Measurement

§ 135.11 Tonnage.

(a) The tonnage of a ship shall consist of PC/UMS Net Tonnage.

(b) The net tonnage shall be determined in accordance with the provisions of the regulations in this subpart.

(c) The net tonnage of novel types of craft whose constructional features are such as to render the application of the provisions of the regulations in this subpart unreasonable or impracticable shall be determined in a manner which is acceptable to the Panama Canal Commission.

§ 135.12 Definitions.

(a) *Upper Deck* means the uppermost complete deck exposed to weather and sea, which has permanent means of weathertight closing of all openings in the weather part thereof, and below which all openings in the sides of the ship are fitted with permanent means of watertight closing. In a ship having a stepped upper deck, the lowest line of the exposed deck and the continuation of that line parallel to the upper part of the deck is taken as the upper deck.

(b) *Moulded Depth* means the vertical distance measured from the top of the keel to the underside of the upper deck at side.

(1) In wood and composite ships the distance is measured from the lower edge of the keel rabbet. Where the form at the lower part of the midship section is of a hollow character, or where thick garboards are fitted, the distance is measured from the point where the line of the flat of the bottom continued inwards cuts the side of the keel.

(2) In ships having rounded gunwales, the moulded depth shall be measured to the point of intersection of the moulded lines of the deck and side shell plating, the lines extending as though the gunwales were of angular design.

(3) Where the upper deck is stepped and the raised part of the deck extends over the point at which the moulded depth is to be determined, the moulded depth shall be measured to a line of reference extending from the lower part of the deck along a line parallel with the raised part.

(c) *Breadth* or *moulded breadth* means the maximum breadth of the ship, measured amidships to the moulded line of the frame in a ship with a metal shell and to the outer surface of the hull in a ship with a shell of any other material.

(d) *Enclosed spaces* mean all spaces which are bounded by the ship's hull, by fixed or portable partitions or bulkheads, by decks or coverings other than permanent or movable awnings. No break in a deck, nor any opening in the ship's hull, in a deck or in a covering of a space, or in the partitions or bulkheads of a space, nor the absence of a partition or bulkhead, shall preclude a space from being included in the enclosed space.

(e) *Excluded spaces* mean, notwithstanding the provisions of paragraph (d) of this section, the spaces referred to in paragraphs (e)(1) to (e)(5) of this section. Excluded spaces shall not be included in the volume of enclosed spaces, except that any such space which fulfills at least one of the following three conditions shall be treated as an enclosed space:

—The space is fitted with shelves or other means for securing cargo or stores;
—The openings are fitted with any means of closure; or
—The construction provides any possibility of such openings being closed.

(1)(i) A space within an erection opposite an end opening extending from deck to deck except for a curtain plate of a depth not exceeding by more than 25 millimeters (one inch) the depth of the adjoining deck beams, such opening having a breadth equal to or greater

than 90 percent of the breadth of the deck at the line of the opening of the space. This provision shall be applied so as to exclude from the enclosed spaces only the space between the actual end opening and a line drawn parallel to the line or face of the opening at a distance from the opening equal to one-half of the width of the deck at the line of the opening (Figure 1).

In the figure:

O = excluded space

C = enclosed space

I = space to be considered as an enclosed space

Hatched-in parts to be included as enclosed spaces.

B = breadth of the deck in way of the opening.

In ships with rounded gunwales the breadth is measured as indicated in Figure 11 in paragraph (e)(5).

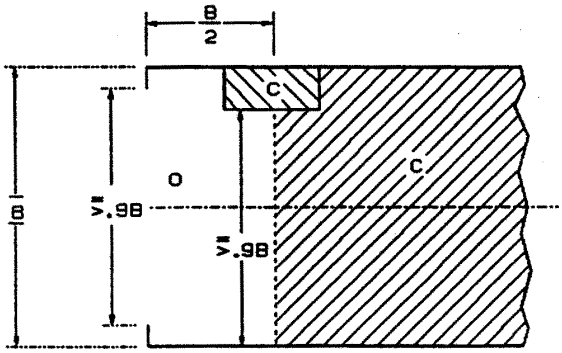

Fig. 1

(ii) Should the width of the space because of any arrangement except by convergence of the outside plating, become less than 90 percent of the breadth of the deck, only the space between the line of the opening and a parallel line drawn through the point where the athwartships width of the space becomes equal to, or less than, 90 percent of the breadth of the deck shall be excluded from the volume of enclosed spaces. (Figures 2, 3 and 4).

In the figures:

O = excluded space

C = enclosed space

I = space to be considered as an enclosed space

Hatched-in parts to be included as enclosed spaces.

B = breadth of the deck in way of the opening.

In ships with rounded gunwales the breadth is measured as indicated in Figure 11 in paragraph (e)(5).

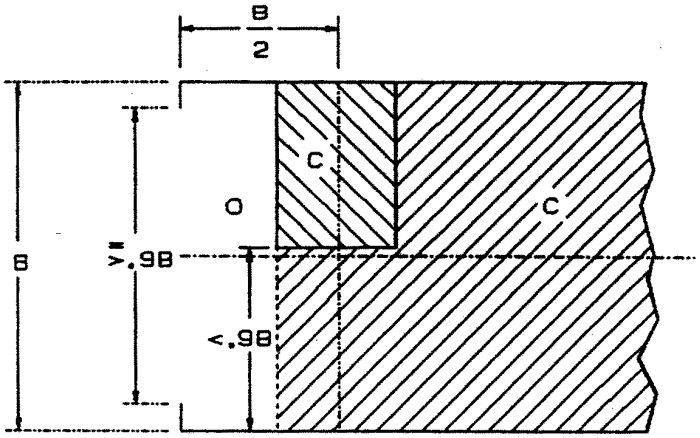

Fig. 2

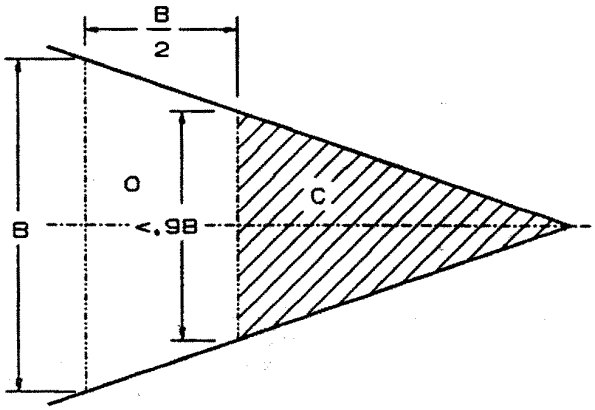

Fig. 3

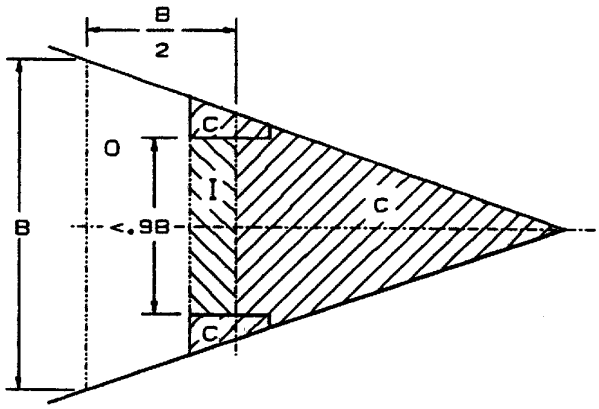

Fig. 4

(iii) Where an interval which is completely open except for bulwarks or open rails separates any two spaces, the exclusion of one or both of which is permitted under paragraphs (e)(1)(i) and/or (e)(1)(ii) of this section, such exclusion shall not apply if the separation between the two spaces is less than the least half breadth of the deck in way of the separation. (Figures 5 and 6).

In the figures:

O = excluded space

C = enclosed space

I = space to be considered as an enclosed space

Hatched-in parts to be included as enclosed spaces.

B = breadth of the deck in way of the opening.

In ships with rounded gunwales the breadth is measured as indicated in Figure 11 in paragraph (e)(5).

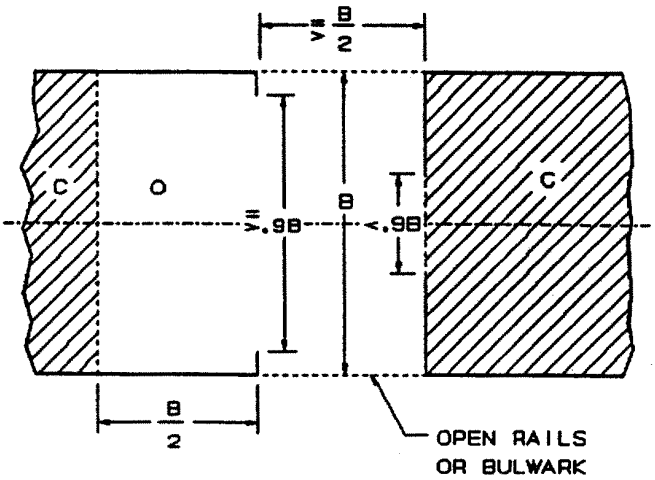
≥ B/2
C
O
≥.9B
B
<.9B
C
B/2
OPEN RAILS
OR BULWARK

Fig. 5

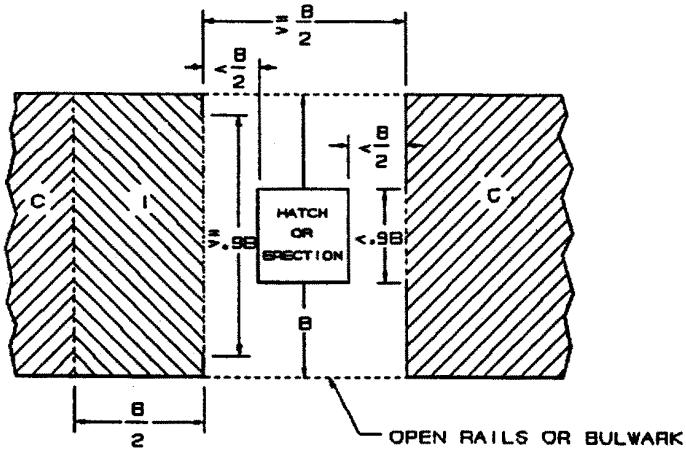
≥ B/2
< B/2
< B/2
C
I
≥.9B
HATCH
OR
ERECTION
<.9B
C
B
B/2
OPEN RAILS OR BULWARK

Fig. 6

(2) A space under an overhead deck covering open to the sea and weather, having no other connection on the exposed sides with the body of the ship than the stanchions necessary for its support. In such a space, open rails or a bulwark and curtain plate may be fitted or stanchions fitted at the ship's side, provided that the distance between the top of the rails or the bulwark and the curtain plate is not less than 0.75 meters (2.5 feet) or one-third of the height of the space, whichever is the greater. (Figure 7).

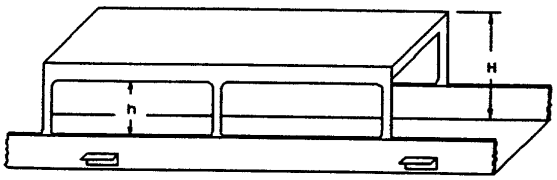

Fig. 7

h = AT LEAST $\frac{H}{3}$ OR 0.75 m (2.5 FEET) WHICHEVER IS THE GREATER

(3) A space in a side-to-side erection directly in way of opposite side openings not less in height than 0.75 meters (2.5 feet) or one-third of the height of the erection, whichever is the greater. If the opening in such an erection is provided on one side only, the space to be excluded from the volume of enclosed spaces shall be limited inboard from the opening to a maximum of one-half of the breadth of the deck in way of the opening. (Figure 8).

In the figures:

O = excluded space

C = enclosed space

I = space to be considered as an enclosed space

Hatched-in parts to be included as enclosed spaces.

B = breadth of the deck in way of the opening.

In ships with rounded gunwales the breadth is measured as indicated in Figure 11 in paragraph (e)(5).

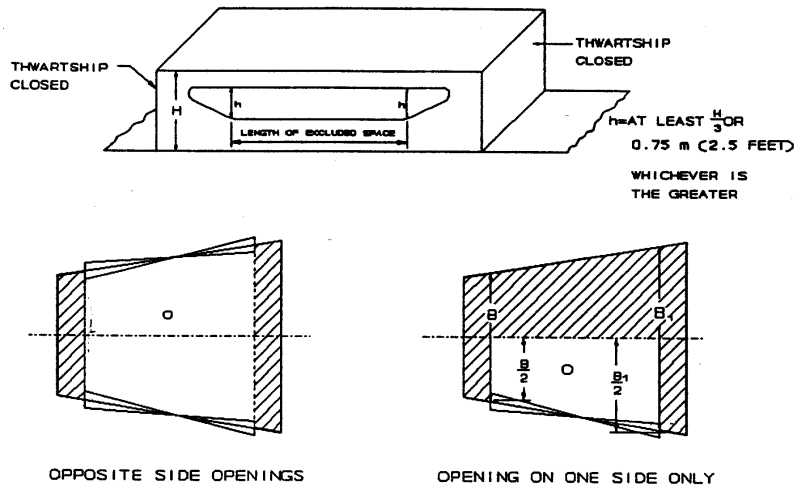

Fig. 8

(4) A space in an erection immediately below an uncovered opening in the deck overhead, provided that such an opening is exposed to the weather and the space excluded from enclosed spaces is limited to the area of the opening. (Figure 9).

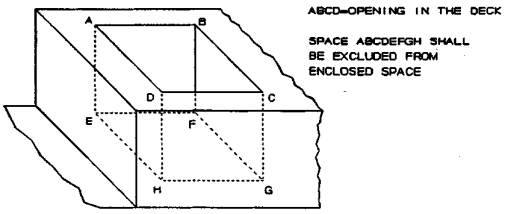

Fig. 9

(5) A recess in the boundary bulkhead of an erection which is exposed to the weather and the opening of which extends from deck to deck without means of closing, provided that the interior width is not greater than the width at the entrance and its extension into the erection is not greater than twice the width of its entrance. (Figure 10).

In the figure:

O = excluded space

C = enclosed space

I = space to be considered as an enclosed space

Hatched-in parts to be included as enclosed spaces.

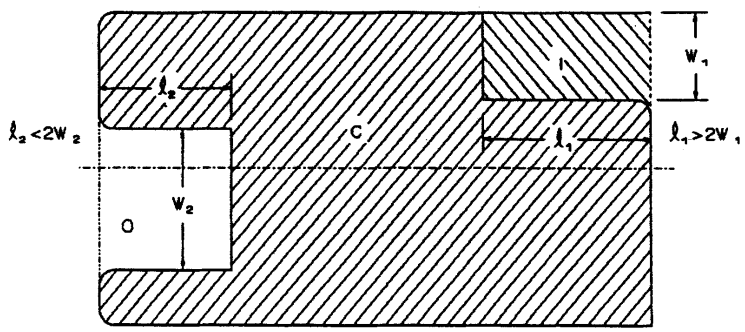

Fig. 10

SHIPS WITH ROUNDED GUNWALES

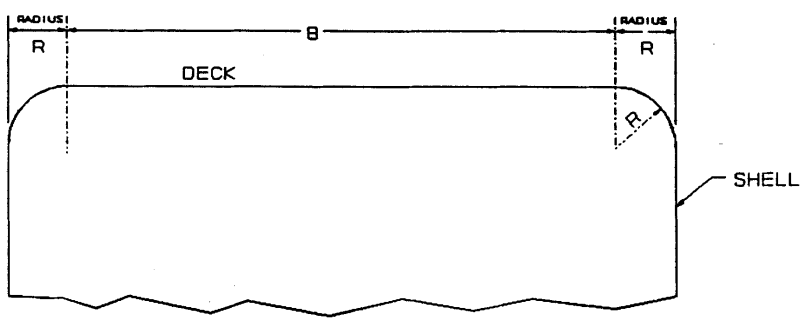

Fig. 11

(f) *Passenger* means every person other than:

(1) the master and the members of the crew or other persons employed or engaged in any capacity on board a ship on the business of that ship; and

(2) a child under one year of age.

(g) *Weathertight* means that in any sea conditions water will not penetrate into the ship.

§ 135.13 Determination of PC/UMS Net Tonnage.

PC/UMS Net Tonnage shall be determined as follows:

(a) For all vessels with tolls fixed in accordance with § 133.1(a) or (b) of this chapter, unless subject to the transitional relief measures established in § 135.31 of this chapter, the formula for determining PC/UMS Net Tonnage is:

$$\text{PC/UMS Net Tonnage} = K_4(V) + K_5(V) + CF_1(VMC)$$

in which formula:

(1) ''K_4''={0.25 + [0.01 × Log_{10}(V)]} × 0.830

(2) ''K_5''=[Log_{10}(DA–19)]/{[Log_{10}(DA–16)] × 17}. If the number of passengers (N_1 + N_2) is greater than 100 or DA is equal to or less than 20.0 meters then K5 is equal to zero.

(3) ''V''=Total volume of all enclosed spaces of the ship in cubic meters and is identical to V as specified in the 1969 International Convention on Tonnage Measurement of Ships.

(4) ''DA'' (Average depth)=The result of the division of the Total Volume by the product of the length in meters multiplied by the moulded breadth in meters. DA=V/(L × MB).

(5) ''L'' (Length) is defined as 96 percent of the total length on a waterline at 85 percent of the least moulded depth measured from the top of the keel, or the length from the fore side of the stem to the axis of the rudder stock on that waterline, if that be greater. In ships designed with a rake of keel, the waterline on which this length is measured shall be parallel to the designed waterline.

(6) Moulded breadth is defined in § 135.12(c).

(7) N_1=number of passengers in cabins with not more than 8 berths.

(8) N_2=number of other passengers.

(9) N_1 + N_2=total number of passengers the ship is permitted to carry as indicated in the ship's passenger certificate.

(10) ''CF_1''=.031 for ships which the Commission determines are designed to carry containers on or above the upper deck; otherwise ''CF_1''=0. In making the foregoing determination, the Commission may consider documentation provided by such officials as are authorized by national governments to undertake surveys and issue national tonnage certificates.

(11) ''VMC''=the volume (in cubic meters) of maximum capacity of the containers that can be carried on or above the upper deck. This volume may be calculated by multiplying the maximum number of containers by 29.2 m^3, or by other generally accepted methods that meet the Commission's accuracy standards. VMC will not include any container capacity that is included in ''V''.

(b) For vessels subject to transitional relief measures, the existing Panama Canal Net Tonnage as specified on the certificate issued by the Commission plus CF_1 (VMC) shall be the PC/UMS Net Tonnage. In such case, the formula for determining PC/UMS Net Tonnage is: PC/UMS Net Tonnage=Panama Canal Net Tonnage+CF_1(VMC).

[59 FR 43255, Aug. 22, 1994, as amended at 61 FR 60612, Nov. 29, 1996]

§ 135.14 Change of PC/UMS Net Tonnage.

(a) Vessels whose PC/UMS Net Tonnage is determined in accordance with § 135.13(a) shall have a new PC/UMS Net Tonnage issued if ''V'' changes.

(b) A vessel whose PC/UMS Net Tonnage is determined in accordance with § 135.13(b) shall retain that tonnage until the vessel undergoes a significant structural change as defined in § 135.14(c). In the event of a significant structural change, the vessel's PC/UMS Net Tonnage shall be determined in accordance with § 135.13(a).

(c) For the purposes of paragraph (b) of this section, significant structural change means an actual change of at least 10 percent in the total volume of the vessel. Vessels without comparative ITC 69 total volumes, or other suitable sources of total volume comparison, shall have a fair and equitable volume comparison made by the Commission to determine if a significant structural change has occurred.

(d) If the VMC of a vessel is changed due to any physical modification after the vessel's PC/UMS Net Tonnage has been determined at the Canal, the PC/UMS Net Tonnage may be revised by the Commission.

[59 FR 43255, Aug. 22, 1994, as amended at 61 FR 60612, Nov. 29, 1996]

§ 135.15 Calculation of volumes.

(a) All volumes included in the calculation of PC/UMS Net Tonnage shall be measured, irrespective of the fitting of insulation or the like, to the inner side of the shell or structural boundary plating in ships constructed of metal, and to the outer surface of the shell or to the inner side of structural boundary surfaces in ships constructed of any other material.

(b) Volumes of appendages shall be included in the total volume.

(c) Volumes of spaces open to the sea may be excluded from the total volume.

(d) VMC may be calculated by multiplying the maximum number of containers by 29.2 m^3, or by other generally accepted methods that meet the Commission's accuracy standards.

(e) For purposes of this part, the outside dimension of a container is 8 ft.×8 ft.×20 ft., or 36.25 m^3. These parameters will be used for determining the maximum above-deck container capacity.

[59 FR 43255, Aug. 22, 1994, as amended at 61 FR 60612, Nov. 29, 1996]

§135.16 Measurement and calculation.

(a) All measurements used in the calculation of volumes shall be taken to the nearest centimeter or one-twentieth of a foot.

(b) The volumes shall be calculated by generally accepted methods for the space concerned and with an accuracy acceptable to the Commission.

(c) The calculation shall be sufficiently detailed to permit easy checking.

Subpart C—Warships, Dredges and Floating Drydocks

§135.21 Warships, dredges and floating drydocks to present documents stating displacement tonnage.

All warships, dredges and floating drydocks shall present documents stating accurately the tonnage of displacement at each possible mean draft. The term ''warship'' means any vessel of government ownership that is being employed by its owners for military or naval purposes and shall include armed coast guard vessels and vessels devoted to naval training purposes, but shall not include naval auxiliary vessels such as tankers, ammunition ships, refrigerator ships, repair ships, tenders or vessels used to transport general military supplies.

(Approved by Office of Management and Budget (OMB) under control number 3207–0001)

§135.22 Tolls on warships, dredges and floating drydocks levied on actual displacement.

The toll on warships, dredges and floating drydocks shall be based upon their tonnage of actual displacement at the time of their application for passage through the Canal. The actual displacement of these vessels shall be determined in a manner acceptable to the Commission and shall be expressed in tons of 2240 pounds. Should any of these vessels not have on board documents from which the displacement can be determined, Commission officials may use any practicable method to determine the displacement tonnage for assessment of tolls.

Subpart D—Transitional Relief Measures

§135.31 Transitional relief measures.

Transitional relief measures as specified in §135.13(b) shall be applied to a vessel which has made a transit of the Panama Canal between March 23, 1976 and September 30, 1994, inclusive, and has not had a significant structural change as defined in §135.14(c) since the last transit during the above period. Any significant structural change made after the granting of transitional relief measures shall disqualify a vessel for further relief, and the vessel shall be handled in accordance with the provisions of §135.13(a). Transitional relief measures are applied to the vessel during its entire active service life as long as the vessel does not undergo a significant structural change. Vessels subject to transitional relief measures shall present their existing Panama Canal Tonnage Certificate on their first transit after September 30, 1994. Vessels subject to relief measures shall not be required to present an ITC 69 or any other total volume certification. Vessels subject to relief measures shall provide Canal authorities with sufficient documentation, such as plans and classification certificates, for the Commission to determine the VMC.

(Approved by Office of Management and Budget (OMB) under control number 3207–0001)

[59 FR 43255, Aug. 22, 1994, as amended at 61 FR 60612, Nov. 29, 1996]

Subpart E—Alternative Method for Measurement of Vessels

§ 135.41 Measurement of vessels when volume information is not available.

When an ITC 69 or suitable substitute and documentation for the calculation of the VMC are not presented, or when the certificate, substitute or VMC documentation presented does not meet accuracy standards acceptable to the Commission, vessels will be measured in a manner that will include the entire cubical contents of V and VMC as defined in this part. The Commission shall endeavor to determine an accurate total volume of the vessel using the best information available at the time of the determination. The total volume shall be calculated by generally accepted methods for the space concerned and with an accuracy acceptable to the Commission.

[59 FR 43255, Aug. 22, 1994, as amended at 61 FR 60612, Nov. 29, 1996]

§ 135.42 Measurement of vessels when tonnage cannot be otherwise ascertained.

(a) Vessels without an ITC 69, a suitable substitute or documentation from which to calculate total volume shall be measured as follows:

(1) The volume of structures above the upper deck may be determined by any accepted method or combination of methods. These methods include but are not limited to simple geometric formulas, Simpson's rules, and other standard mathematical formulas. If special procedures are used, they should be identified. In all cases, measurements and calculations should be sufficiently detailed to permit easy review.

(2) The volume of the hull below the upper deck (UDV) shall be determined as follows:

(i) The formula:

$$UDV=\{0.91 \times [(LOA \times MB) \times (D-SLD)]\} + (SLDISP/1.025)$$

Where:

UDV=Total volume of all enclosed spaces below the upper deck in cubic meters.

LOA=The Length overall, i.e., the length of the ship in meters from the foremost to the aftermost points, including a bulbous bow if present.

MB=Moulded breadth in meters as defined in § 135.12(c).

D=Moulded depth in meters as defined in § 135.12(b).

SLD=Summer loaded draft (in meters), i.e., the maximum depth to which the vessel's hull may be immersed when in a summer zone.

SLDISP=Summer loaded displacement, i.e., the actual weight in metric tons of the water displaced by the vessel when immersed to her SLD.

(ii) If § 135.42(a)(2)(i) proves unworkable, the total volume of the hull below the upper deck shall be determined by multiplying the product of the LOA, MB and D by the appropriate coefficient listed in the following table:

LOA in meters	Coefficient
0 to 30	.7150
> 30 to 60	.7250
> 60 to 90	.7360
> 90 to 120	.7453
> 120 to 150	.7328
> 150 to 180	.7870
> 180 to 210	.8202
> 210 to 240	.7870
> 240 to 270	.7328
> 270	.7453

(3) The total volume of a vessel is the sum of the volume of the structures above the upper deck as determined in accordance with § 135.42(a)(1) and the volume of the hull below the upper deck as determined in accordance with § 135.42(a)(2) (i) or (ii).

(b) Vessels which have had their total volume determined in accordance with § 135.41 or this section may apply for readmeasurement when they have a new or corrected ITC 69, a suitable substitute or present documentation sufficient to calculate total volume.

(c) VMC may be determined by any accepted method or combination of methods, including but not limited to, simple geometric formulas, multiplication of a container by 29.2 m^3, or other standard mathematical formula. The on-deck container capacity of a vessel for VMC purposes will be determined by the Commission.

[59 FR 43255, Aug. 22, 1994; 59 FR 52862, Oct. 19, 1994, as amended at 61 FR 60612, Nov. 29, 1996]

SUBCHAPTER D—[RESERVED]
SUBCHAPTER E—EMPLOYMENT AND COMPENSATION UNDER THE PANAMA CANAL EMPLOYMENT SYSTEM

PART 251—REGULATIONS OF THE SECRETARY OF THE ARMY (PANAMA CANAL EMPLOYMENT SYSTEM)—PERSONNEL POLICY

Subpart A—General Provisions

Sec.
251.1 Purpose.
251.2 Definitions.
251.3 Panama Area Personnel Board.
251.4 Adoption of Panama Canal Employment System by Department of Defense.
251.5 Compliance with regulations.
251.6 Deviations.

Subpart B—Compensation and Allowances Under the Panama Canal Employment System

251.11 Uniformity of job classification standards.
251.12 Uniformity of compensation.
251.13 Establishment of basic wages.
251.21 Use of categories.
251.22 Non-manual category.
251.23 Manual category.
251.24 Special category.
251.25 Basic compensation.
251.31 Tropical differential.
251.32 Additional remuneration under Panama Canal Treaty.
251.41 Salary protection upon conversion of pay base.
251.42 Individual pay determinations.
251.43 Within-grade increases.
251.71 Environmental and night shift differential for manual-type positions.
251.72 Physical hardship or hazard differentials for non-manual positions.
251.73 Premium pay.

AUTHORITY: 22 U.S.C. 3641–3701, E.O. 12173, 12215.

SOURCE: 47 FR 12952, Mar. 26, 1982, unless otherwise noted.

Subpart A—General Provisions

§251.1 Purpose.

The regulations in this part are prescribed for the purposes of coordinating the personnel policies and activities of the respective agencies participating in the Panama Canal Employment System and excluding employees in the Department of Defense from certain provisions of the Panama Canal Employment System.

§251.2 Definitions.

(a) *Agency* means: (1) The Panama Canal Commission, and (2) an executive agency or the Smithsonian Institution, to the extent of any election in effect under section 1212(b)(2) of the Panama Canal Act.

(b) *Employee* means an individual serving in a position.

(c) The *Panama Canal Treaty* means the Panama Canal Treaty between the United States of America and the Republic of Panama, signed September 7, 1977, and related agreements.

(d) *Position* means a civilian position in an agency, if a substantial portion of the duties and responsibilities of the position are performed in the Republic of Panama.

(e) *Subchapter II* means Subchapter II of Chapter 2 of Title I of the Panama Canal Act of 1979 (93 Stat. 463).

(f) *PAPB* means the Panama Area Personnel Board.

§251.3 Panama Area Personnel Board.

(a) There is hereby established the Panama Area Personnel Board (PAPB). The purpose of the PAPB shall be to assist the Secretary of the Army in carrying out his responsibility to coordinate the policies and the activities of the agencies participating in the Panama Canal Employment System.

(b) Functions. The Panama Area Personnel Board shall:

(1) Provide leadership and advice in all aspects of personnel management so as to promote uniformity of policies and practices to the extent compatible with the missions and governing rules of the various agencies.

(2) Formulate and issue such additional regulations, guidelines, and procedures as may be necessary to carry out the provisions of Parts 251 and 253 of this subchapter.

(3) Approve qualification standards which will be applied uniformly in

effecting all personnel actions. In general, qualification standards issued by the Office of Personnel Management and those developed by individual agencies which are appropriate for general use will be used for this purpose.

(4) Provide technical direction to the Central Examining Office.

(5) Consider requests for conversion to Canal Area Career or Career-Conditional appointments.

(6) Perform such other duties and responsibilities as prescribed by the Secretary of the Army or his designee.

(c) Agencies shall consult with each other concerning any matter of interest within the scope of the Panama Canal Employment System and refer any recommendations for changes to the Panama Area Personnel Board.

(d) Composition. The PAPB shall be composed of the Administrator of the Panama Canal Commission, the Commander-in-Chief, United States Southern Command, and one member appointed by the Secretary of the Army who will serve as permanent chairman. The extent to which any member may serve through a representative designated by the member will be determined by the PAPB.

(e) Any member may enter topics on a meeting agenda.

(f) Records. The Panama Canal Commission shall have control of the systems of records of the PAPB that are subject to 5 U.S.C. 552 and 552a (the Freedom of Information and Privacy Acts). The regulations in Parts 9 and 10 of this title are adopted as regulations of the PAPB. The Administrator shall act as agency head for the purposes of the Freedom of Information and Privacy Acts.

[47 FR 12952, Mar. 26, 1982, as amended at 49 FR 31070, Aug. 3, 1984; 51 FR 33262, Sept. 19, 1986]

§ 251.4 Adoption of Panama Canal Employment System by Department of Defense.

(a) Subchapter II and the Panama Canal Employment System are hereby made applicable to all employees of all Department of Defense agencies and departments in Panama, except that the positions and incumbents specified by paragraphs (b) through (i) of this section are excluded, to the extent indicated, from Subchapter II and the regulations in this part and in Part 253.

(b) The following positions, and the incumbents thereof, are excluded from all the provisions of Subchapter II, (except section 1217(d)) and the regulations in this part and Part 253 of this chapter:

(1) Consultants and experts when employed under the provisions of 5 U.S.C. 3109 or other statutory authority.

(2) Any employee excluded by 5 U.S.C. 2105(c) from coverage under laws administered by the Office of Personnel Management, except that Subpart B of this part shall apply to such employees.

(3)–(4) [Reserved]

(5) Positions in the Department of Defense designated as sensitive, key positions, for which off-Isthmus recruitment is necessary, except that the incumbents of these positions are eligible to receive any differential authorized by Subchapter II and the regulations in §§ 251.31 and 251.32 of this part.

(6) Positions of mess attendant which are designated by the commander of the employing military command for occupancy of San Blas (Cuna) Indians pursuant to agreements with the San Blas Tribal Chieftain.

(c) The following positions, and the incumbents thereof, are excluded from the provisions of section 1212 of the Panama Canal Act which provide for merit selection for employment, section 1213 of the said Act and Subparts B and C of the regulations in Part 253 of this chapter:

(1) Attorneys.

(2) Intelligence related positions in the Departments of Defense and Army that are excepted from the competitive service by 5 CFR 213.3106(d)(1), 213.3106(d)(2), and 213.3107(a)(5).

(3) Visiting physicians and nurses of the Health Services Command, U.S. Army Medical Activity, Panama assigned to the home visit program under the Cash Relief Act of July 8, 1937, as amended (50 Stat. 478; 68 Stat. 17), for beneficiaries who reside in the Republic of Panama.

(4) Hospital residents and interns and other student hospital employees.

(5) Positions designated by competent authority as fee-rate positions

within the Special Category established by the regulations in this part.

(6) Positions requiring part-time or intermittent services in which the individual appointee will receive during his service year compensation that aggregates not more than 40 percent of the annual salary rate for the first step of grade 3 in the applicable Non-Manual schedule.

(7) Positions designated by the agency as appropriate for use as Student Trainee positions and which are filled under a cooperative work-study agreement between an agency and a college or university approved for participation in such a program by the agency.

(8) [Reserved]

(9) Student assistant positions.

(10) Positions that are filled by mentally retarded or severely physically handicapped persons pursuant to regulations issued by the PAPB. Such regulations shall conform, in substance, to those utilized to authorize appointment of the aforesaid classes of persons in Federal employment in the United States.

(d) Heads of services in hospitals operated by the United States in the Republic of Panama, and the incumbents thereof, are excluded from the provisions of sections 1212 of the Panama Canal Act which provide for merit selection for employment, sections 1212 and 1215 through 1217 of the said Act, Subpart B of the regulations in this part, and Subparts B and C of the regulation in Part 253, except that such positions and incumbents are not excluded from the provisions of section 1217(d) of the Act.

(e) Positions of student assistant, apprentice and learner, and the incumbents thereof, are excluded from the provisions of section 1225(b)(2) of the Panama Canal Act.

(f) Professional educators employed by the Department of Defense Dependent Schools are excluded from all the provisions of Subchapter II and the regulations in this part and Part 253 of this chapter, except that the incumbents of these positions are eligible to receive any differential authorized by Subchapter II and the regulations in §§ 251.31 and 251.32 of this part.

(g) Officers and employees of the National Security Agency appointed and compensated pursuant to the National Security Act of 1959, as amended, 50 U.S.C. 3402, note, are excluded from all provisions of subchapter II and the regulations contained in this part and part 253 of this chapter, except that such positions are not excluded from the provisions of sections 1217, 1217a and 1218 of subchapter II or the regulations in §§ 251.25, 251.31 and 251.32.

(h) Positions at or above GS–6 and equivalent subject to the Civilian Intelligence Personnel Management System (CIPMS) are excluded from all the provisions of subchapter II and the regulations contained in this part and part 253, except that such positions are not excluded from the provisions of sections 1217, 1217a, and 1218 of subchapter II or the regulations in §§ 251.25, 251.31 and 251.32.

(i) Officers and employees of non-Department of Defense (DOD) agencies attached to DOD agencies in Panama are excluded from all the provisions of subchapter II and the regulations contained in this part and part 253 of this chapter, except that such employees may be covered by the provisions of sections 1217, 1217a, and 1218 of subchapter II and the regulations in §§ 251.25, 251.31 and 251.32 of this chapter, if coverage by said provisions is agreed to by the employee's agency and DOD and such coverage does not result in a benefit greater than that provided to DOD employees.

[47 FR 12952, Mar. 26, 1982, as amended at 51 FR 33262, Sept. 19, 1986; 56 FR 1923, Jan. 18, 1991; 56 FR 40555, Aug. 15, 1991; 58 FR 5616, Jan. 22, 1993]

§ 251.5 Compliance with regulations.

Inspection or program evaluation facilities within the higher headquarters of the employing agencies will be utilized for periodic evaluation of operations under the regulations in this part and Part 253 of this chapter. When an evaluation indicates failure on the part of any activity to adhere to the regulations in this part, the Secretary of the Army will bring such deviations to the attention of the head of the agency concerned who will be responsible for taking necessary corrective action. When an evaluation reveals an improper or erroneous action by the

PAPB, the Chairman of the PAPB will direct corrective action be taken.

§ 251.6 Deviations.

Whenever strict compliance with the letter of the regulations in this part would create practical difficulties or undue hardships, the Panama Area Personnel Board may permit a deviation from these regulations. Such authority may be exercised only if the deviation is within the spirit of the regulations and the efficiency of the U.S. Government and the integrity of the Panama Canal Employment System are protected and promoted. Any deviation authorized, and the reasons therefor, shall be made a matter of record.

[51 FR 33262, Sept. 19, 1986]

Subpart B—Compensation and Allowances Under the Panama Canal Employment System

§ 251.11 Uniformity of job classification standards.

In order to assure uniform application of rates of basic compensation, job classification standards shall be uniform within and among all agencies. Any problems arising in achieving such uniformity which cannot be resolved between or among the agencies shall be referred to the PAPB for resolution. If resolution is not achieved the matter shall then be forwarded to the Office of the Secretary of the Army for decision.

§ 251.12 Uniformity of compensation.

(a) The rates of basic compensation for positions and employees and the additional compensation authorized by §§ 251.31 and 251.32 shall be uniform within and among all agencies. Any problems arising in achieving such uniformity shall be referred to the PAPB for resolution. If resolution is not achieved the matter shall then be forwarded to the Office of the Secretary of the Army for decision.

(b) This section shall not preclude the adoption by agencies, under regulations issued by the PAPB, of special rate ranges or other special rates of basic pay for positions for which employees must be recruited from outside the Republic of Panama or in other appropriate circumstances. This section shall not preclude the establishment of rates of pay for employees described in paragraph (b)(1) of this section that are different than the rates established for employees described in paragraph (b)(2) of this section:

(1) A person who was employed by a department on September 30, 1979 and continued in employment with an agency without a break in service of more than three days or a person who was separated from the service of the Panama Canal Company or Canal Zone Government by reason of a reduction in force on September 30, 1979, and was appointed to a position in the Panama Canal Commission before April 1, 1980; a person who was employed on September 30, 1979, by an agency of the United States Government (other than an agency subject to this part) which since that date has had responsibility for carrying out the rights and responsibilities of the United States under the Panama Canal Treaty of 1977 if the person is appointed to a position under Part 253 within 90 days of terminating employment with such agency; and

(2) Anyone other than a person described in paragraph (b)(1) of this section.

[47 FR 12952, Mar. 26, 1982, as amended at 51 FR 33262, Sept. 19, 1986]

§ 251.13 Establishment of basic wages.

Agencies that participate in the Panama Canal Employment System shall consult with each other concerning basic pay for employees and shall refer their recommendations for basic pay to the Panama Area Personnel Board. Upon approval by the Secretary of the Army or his designee of basic wage rates, the rates shall be adopted by the agencies.

§ 251.21 Use of categories.

Positions in the agencies shall be grouped into the categories set forth in §§ 251.22 to 251.24.

§ 251.22 Non-manual category.

Those occupational groupings which embrace administrative, clerical, technical, professional, and related occupations. This includes positions covered by Chapter 51 of Title 5, United States

Code, except for those which are specifically excepted and covered in the Special Category.

§251.23 Manual category.

(a) Those manual-type occupational groupings that elsewhere in the Federal government are usually covered by the Federal Wage System, i.e., those that encompass the unskilled, semi-skilled, and skilled manual-labor occupations in the trades, crafts, and related employment. This category does not include those positions that are specifically excepted and placed in the special category.

(b) The PAPB shall prescribe standards for grading manual category jobs. Whenever a job-grading standard under the Federal Wage System is utilized, the PAPB shall modify it if necessary to take into account any significant differences in knowledge, skill, or responsibility requirements that are found between the job covered by the Federal Wage System standard and the Canal Area position to which it is applied.

§251.24 Special category.

Those occupational groupings which are excepted from the Non-Manual and Manual categories, and whose bases have been traditionally or by statute evaluated, classified, and titled by reference to applicable Government or industry standards for the same or similar work.

§251.25 Basic compensation.

(a) For employees not entitled to the differential prescribed by §251.31 or the additional remuneration prescribed by §251.32, the rates of pay shall be the base salary or wage rates prescribed by §251.13. For employees who are entitled to the differential prescribed by §251.31 or the additional remuneration prescribed by §251.32, the rates of pay shall be the base salary or wage rate plus the applicable differential or additional remuneration. The aggregate pay thus derived shall be considered basic compensation.

(b) An employee shall not be paid, except as provided in paragraph (c) of this section, basic compensation as defined in paragraph (a) of this section at a rate in excess of the rate of basic pay payable for Level V of the Executive Schedule.

(c) The Deputy Administrator and the Chief Engineer of the Panama Canal Commission shall not be paid basic compensation as defined in paragraph (a) of this section at a rate in excess of the rate of basic pay payable for level IV of the Executive Schedule.

[56 FR 40555, Aug. 15, 1991]

§251.31 Tropical differential.

(a) An overseas tropical differential for an employee in the category established by §251.12(b)(1) who is a United States citizen employee and who qualifies under the provisions of paragraph (b) of this section, shall be fixed by the head of each agency in an amount equal to 15 percent of the applicable base wage or salary established under §251.13.

(b) The tropical differential prescribed by paragraph (a) of this section shall be paid to each United States citizen employee who qualifies under the following rules:

(1) To be eligible, the employee must have continuously occupied a position, other than a position the rates of pay for which are fixed in accordance with rates of pay for the same or similar work performed outside the continental United States, since: (i) Recruitment or transfer by a department from a place (other than the former Canal Zone) under the jurisdiction of the United States, or (ii) Separation from the Armed Forces of the United States or from employment with a United States firm, organization, or interest under conditions which provided by contract for return transportation to a place (other than the former Canal Zone) under the jurisdiction of the United States.

(2) When the employee is married to another employee eligible for the differential prescribed by this section, the differential may be paid to one spouse only.

(3) The employee whose spouse is a member of the U.S. military service stationed in the area may be paid the differential only to the extent that the amount of the differential otherwise payable exceeds the amount of the total housing allowance (BAQ plus the

housing portion of the station allowance) established for Panama, Republic of Panama, for a military member having the same rank and family size as the employee's military spouse. The employee whose spouse, by reason of U.S. Government employment in the Republic of Panama, is eligible under the Department of State Standardized Regulations (Government Civilian, Foreign Areas) (DSSR) for a living quarters allowance (LQA) may be paid the differential only to the extent that the amount of the differential otherwise payable exceeds the amount of LQA established for Panama, Republic of Panama, by sections 920 and 932.22 of the DSSR for one in the same quarter group and with the same family size as the employee's spouse.

(4) Tropical differential may be paid only to an individual whose retention the head of the agency determines is essential.

(c) The rule set forth in paragraph (b)(1) of this section shall not disqualify the employee who has been continuously employed since July 3, 1976, and who on that date was: (1) Receiving a differential, (2) Not receiving a differential because the employee's spouse was receiving a differential or a housing or living quarters allowance, (3) Not receiving a differential because the employee was under 21, unmarried, and the child or stepchild of a resident of the former Canal Zone or the Republic of Panama, or (4) Not receiving a differential solely because such payment when combined with his or her aggregate compensation established under prior regulations in this subpart would have exceeded the then current rate of step 5, GS–17, of the General Schedule previously set out in 5 U.S.C. 5332(a).

(d) The rules set forth in paragraph (b)(2) and (3) of this section shall not disqualify for the differential the employee who is living apart from his or her spouse while party to a pending action for divorce or separate maintenance filed in a court of competent jurisdiction.

(e) The rules set forth in paragraph (b)(1) of this section shall not disqualify an employee who has been continuously employed as a medical doctor since August 15, 1991 and who on that date was receiving the tropical differential.

[47 FR 12952, Mar. 26, 1982, as amended at 56 FR 40556, Aug. 15, 1991]

§ 251.32 Additional remuneration under Panama Canal Treaty.

(a)(1) An overseas Panama Area differential for an employee in the category established by § 251.12(b)(2) and who qualifies under the provisions of paragraph (b) of this section shall be fixed by the head of each agency for each position in an amount equal to (i) the rate of basic pay for the same or similar work performed in the continental United States by employees of the Government of the United States plus (ii) an amount equal to 15 percent of that rate, less (iii) the base rate of pay established for the position pursuant to § 251.13. The amount of the differential shall not exceed 25 percent of the rate of pay for the same or similar work performed in the United States by employees of the Government of the United States.

(2) Notwithstanding the provisions of paragraph (a)(1) of this section, the Panama Area differential for pilots in the category established by § 251.12(b)(2), employed in the navigation of vessels in the waters of the Panama Canal, who qualify under the provisions of paragraph (b) of this section, shall be an amount equal to 15 percent of the base salary established under § 251.13.

(b) The Panama Area differential prescribed by paragraph (a) of this section shall be paid to each employee who qualifies under the following rules:

(1) An employee is eligible if recruited from outside the Republic of Panama for placement in Panama.

(2) The Panama Area differential may be paid only to an individual whose recruitment or retention the agency head determined to be essential.

(c) The rates of the Panama Area differential prescribed by this section shall be adjusted by heads of agencies with reference to changes in rates of pay for United States Government employees in the continental United States.

(d) The rules set forth in paragraph (b)(1) of this section shall not disqualify an employee who has been continuously employed as a medical doctor since August 15, 1991, and who on that date was receiving the Panama Area differential.

[47 FR 12952, Mar. 26, 1982, as amended at 56 FR 40556, Aug. 15, 1991]

§251.41 Salary protection upon conversion of pay base.

(a) In the case of any employee whose rate of basic pay is determined in relation to rates of basic pay for the same or similar work in the United States and which is converted to a rate of basic pay which is determined in relation to rates in areas other than the United States, the employee shall continue to receive a rate of basic pay (but not including environmental differentials authorized under §251.71 or §251.72 of this chapter) not less than that to which the employee was entitled immediately before the conversion.

(b) This section shall cease to apply with respect to any employee if the employee is placed in a position:

(1) For which the rate of basic pay is determined in relation to rates of basic pay in the United States; or

(2) Which is of a lower grade.

§251.42 Individual pay determinations.

(a) Except as provided in paragraph (b) of this section, pay determinations in connection with personnel actions such as promotions, demotions, transfers, and conversions to new schedules shall be made in accordance with regulations generally in effect for employees in the Federal service as follows:

(1) *Non-manual category*. Salary changes for employees in this category shall be in general conformity with Subparts B and C of 5 CFR Part 531.

(2) *Manual category*. Wage determinations for employees in this category shall be made in accordance with regulations published by the PAPB. Such regulations shall generally conform to regulations published in 5 CFR Part 532.

(3) *Special category*. Salary and wage changes for employees in this category shall be made in accordance with regulations promulgated by the employing agency. In those cases where more than one agency employs persons in positions in this category, the regulations will be developed jointly by the interested agencies.

(b) The pay and grade retention regulations in effect for employees to whom Chapter 51 of Title 5, United States Code, applies, which are set forth in 5 CFR Part 536, shall, in general, apply to reductions in the pay or grade of employees to whom this section applies, except that the provisions of 5 CFR Part 536 pertaining to retroactivity and to appeals shall not apply, and except that the PAPB may make other exceptions.

§251.43 Within-grade increases.

(a) *Non-manual category*. Employees in positions in this category shall be advanced to higher steps within the grade of their positions generally in accordance with 5 CFR Part 531, Subpart D.

(b) *Manual category*. Employees in positions in this category shall be advanced successively to the next higher step in their grade level generally in accordance with FPM Supplement 532–1.

(c) *Special category*. Employees in positions in this category shall be advanced successively to the next higher step within their grade in accordance with regulations to be prescribed by the head of the agency concerned.

[47 FR 12952, Mar. 26, 1982, as amended at 51 FR 33262, Sept. 19, 1986]

§251.71 Environmental and night shift differentials for manual-type positions.

The head of each agency, in coordination with the heads of other agencies, may authorize payment of environmental differentials for manual-type positions to compensate for exposure to hazards, physical hardships, and working conditions of an unusually severe nature which have not been considered in determining the base rate of pay for the position in question. Differentials for night work may also be established for manual-type positions. Any differential prescribed under this section shall conform with like differentials established under the Federal Wage System to the extent that it

is practicable under local conditions. Such differential shall be treated as part of the basic compensation for the position to the extent it is so treated in the Federal Wage System.

§ 251.72 Physical hardship or hazard differentials for non-manual positions.

The head of each agency, in coordination with the heads of other agencies, may authorize payment of differentials for positions, other than positions subject to § 251.71 of this chapter, to compensate for irregular or intermittent duty involving unusual physical hardship or hazard. Differential prescribed under this section shall generally conform to regulations published in 5 CFR Part 550.

§ 251.73 Premium pay.

(a) Premium pay for Manual-type positions shall be established in accordance with the provisions of 5 U.S.C. 5544 and Supplement 532–1 of the Federal Personnel Manual; *Provided, However,* That any rule concerning premium pay established prior to the effective date of these regulations may be continued for the type of position to which the rule applied before the said effective date.

(b) Premium pay and compensatory time for positions, other than positions subject to paragraph (a) of this section, shall be established in accordance with the provisions of Subchapter V of Chapter 55 of Title 5, United States Code; *Provided, however,* That any rule concerning premium pay or compensatory time established prior to the effective date of these regulations may be continued for the type of position to which the rule applied before the said effective date.

PART 253—REGULATIONS OF THE SECRETARY OF THE ARMY (PANAMA CANAL EMPLOYMENT SYSTEM)—EMPLOYMENT POLICY

PANAMA CANAL EMPLOYMENT SYSTEM

Subpart A—General Provisions

Sec.
253.1 Purpose.
253.2 Definitions.
253.3 Establishment of Panama Canal Employment System; scope and requirements.
253.4 Coverage and exclusions.
253.5 Central Examining Office.
253.6 Review by the Office of Personnel Management.
253.7 Deviations.
253.8 Exclusions.

PANAMA CANAL BOARD OF APPEALS

253.11 Establishment; composition; appointment of members; alternates; employees.
253.12 Decisions of the Board.
253.13 Classification appeals.
253.14 Terms of members.
253.15 Appeals procedures.
253.16 Effective date of decisions.

Subpart B—Filling Positions

253.31 Authority of appointing officers; methods of filling vacancies.
253.32 [Reserved]
253.33 Positions restricted to Veterans of United States Armed Forces.
253.34 Disqualification of applicants.
253.35 Appointments subject to investigation.
253.36 Prohibited practices.
253.37 Examinations.
253.38 Rating competitors.
253.39 Establishment of registers of eligibles.
253.40 Certificate for appointment.
253.41 Selection from certificates.
253.42 Appointments from registers.
253.43 Temporary and term appointments.
253.44 Noncompetitive appointments.
253.45 Tenure following noncompetitive appointment.
253.46 Promotion, demotion, reassignment, and transfer.
253.47 Rotation of personnel.

Subpart C—Conversion To Canal Area Career or Career-Conditional Appointments

253.71 Eligibility.
253.72 Procedure.
253.73 Tenure.
253.74 Acquisition of merit status.
253.75 Employees not recommended for conversion.

Subpart D—Conversion From Excluded and Temporary Appointments to Canal Area Career or Career-Conditional Appointments

253.76 Eligibility.
253.77 Procedure.

Subpart E—Performance Rating

253.181 Rating system.

Subpart F—Training

253.201 Training programs.

Subpart G—Military Service

253.221 Rights of employees.

Subpart H—Adverse Personnel and Reduction-in-Force Actions

253.241 Applicability of existing law and civil service regulations.
253.242 Probationary employees.

Subpart I—Grievances and Appeals

253.261 Grievance procedures.
253.262 Adverse actions and appeals.
253.263 Appeals from applicants or eligibles.

Subpart J—Records and Reports

253.291 Applicability of Federal Personnel Manual.

Subpart K—Labor-Management Relations

253.311 Labor-management and employee relations.

Subpart L—Equal Employment Opportunity

253.331 Policy concerning equal employment opportunity.

AUTHORITY: 22 U.S.C. 3641–3701, E.O. 12173, 12215.

SOURCE: 47 FR 12956, Mar. 26, 1982, unless otherwise noted.

PANAMA CANAL EMPLOYMENT SYSTEM

Subpart A—General Provisions

§253.1 Purpose.

The regulations in this part are prescribed for the purpose of establishing the Panama Canal Employment System governing employment in the Panama Canal Commission and any other Executive Agency, or the Smithsonian Institution, electing to participate in the system.

§253.2 Definitions.

As used in this part:

(a) *Administrator* is the Administrator of the Panama Canal Commission.

(b) *Agency* means: (1) The Panama Canal Commission, and (2) an executive agency or the Smithsonian Institution, to the extent of any election in effect under section 1212(b)(2) of the Panama Canal Act; except that in paragraph (r) of this section *agency* shall mean an Executive agency, as that term is defined in 5 U.S.C. 105.

(c) *Competitive service* has the meaning given that term in 5 U.S.C. 2102.

(d) *Employee* means an individual serving in a position.

(e) The *Panama Canal Act* means the Panama Canal Act of 1979 (Pub. L. 96–70, 93 Stat. 463).

(f) The *Panama Canal Treaty* means the Panama Canal Treaty between the United States of America and the Republic of Panama, signed September 7, 1977, and related agreements.

(g) *Position* means a civilian position in an agency, if a substantial portion of the duties and responsibilities of the position are performed in the Republic of Panama. In the case of the Commission, *position* means a civilian position in the Commission.

(h) *Subchapter II* means Subchapter II of Chapter 2 of Title I of the Panama Canal Act.

(i) *PAPB* means the Panama Area Personnel Board.

(j) *CEO* means the Central Examining Office.

(k) *Competitive status* has the meaning ascribed to that term in 5 CFR 1.3(c).

(l) *Continental United States* means the forty-eight contiguous states of the United States of America and the District of Columbia.

(m) *Federal Wage System* means the system for fixing and adjusting the rates of pay for prevailing rate employees of the U.S. Government that was established by Pub. L. 92–392 and as set forth in FPM Supplement 532–1 and related issuances.

(n) *Isthmus* means all territory of the Republic of Panama.

(o) *Merit Status* means basic eligibility to be noncompetitively selected to fill a vacant position under the Panama Canal Employment System.

(p) *OPM* means the Office of Personnel Management.

(q) *Veteran* means a person entitled to preference as a *preference eligible* as defined by 5 U.S.C. 2108(3).

(r) *Department* means a department, agency or independent establishment in the executive branch of the Government of the United States (including a corporation wholly owned or controlled

by the United States) which conducted operations in the Canal Zone.

§ 253.3 Establishment of Panama Canal Employment System; scope and requirements.

(a) There is hereby established a Panama Canal Employment System. The employment system is a system of:

(1) Selection for appointment, reappointment, reinstatement, reemployment and retention with respect to positions, employees, and individuals under consideration for appointment; and

(2) Regulations concerning other matters related to employment in an agency, as prescribed in this chapter.

(b) The Panama Canal Employment System shall:

(1) Be based on the consideration of the merit of each employee or candidate for employment and the qualifications and fitness of the employee or candidate to hold the position concerned;

(2) Be subject to the provisions of the Panama Canal Treaty of 1977 and related agreements and any other applicable provision of law;

(3) Apply uniformly within and among all agencies, positions, employees and individuals concerned;

(4) Conform, to the extent practicable and consistent with the provisions of law, to the policies, principles, and standards applicable to the competitive service;

(5) In the case of employees who are citizens of the United States, provide for the appropriate interchange of those employees between positions under this system and positions in the competitive service; and

(6) In the case of non-Panamanian employees hired on or after October 1, 1979, include a policy for their periodic rotation in accordance with the Panama Canal Treaty or the Agreement in Implementation of Article IV thereof.

(c) The Panama Canal Commission and, to the extent of any election pursuant to law and paragraph (d) of this section, any other agency shall conduct their employment practices in accordance with this system and the regulations in this part and in part 251 of this chapter.

(d) The head of any Executive Agency and the Smithsonian Institution may elect to have the Panama Canal Employment System made applicable in whole or in part to personnel of that agency in the Republic of Panama.

(e) Provisions for interchange between this system and the competitive service which involve movement from this system to the competitive service shall be subject to the concurrence of the Office of Personnel Management.

§ 253.4 Coverage and exclusions.

(a) *Applicability*. Except as otherwise provided by an agency head in adopting this employment system for application to an agency, the regulations in this part apply to all applicants for employment and employees, irrespective of citizenship, and to all positions except the employees and positions excluded pursuant to § 253.8.

(b) *Exclusions*. The Assistant Secretary of Army may exclude employees or positions from any or all provisions of this part and may revoke such exclusions.

§ 253.5 Central Examining Office.

(a) There is established the Central Examining Office.

(b) The purpose of the Central Examining Office is to assist in implementing the Panama Canal Treaty and related agreements with respect to recruitment, examination, determination of qualification standards, and similar matters.

(c) Authority of the Central Examining Office. The CEO may, subject to policy direction of the PAPB:

(1) Develop examination rating guides.

(2) Conduct, or arrange for, such recruitment and examining programs as may be required to insure an adequate supply of qualified eligibles.

(d) The Central Examining Office shall serve all agencies equally, and shall not give preference to any agency.

§ 253.6 Review by the Office of Personnel Management.

The Office of Personnel Management shall make periodic reviews of the operations of the Panama Canal Employment System for conformity with the

requirements of applicable portions of Title 5, United States Code, this part, and part 251, and shall report its findings to the Panama Area Personnel Board.

§253.7 Deviations.

Whenever strict compliance with the letter of the regulations in this part would create practical difficulties or undue hardships, the Panama Area Personnel Board may permit a deviation from these regulations. Such authority may be exercised only if the deviation is within the spirit of the regulations, and the efficiency of the U.S. Government and the integrity of the Panama Canal Employment System are protected and promoted. Any deviation authorized, and the reasons therefor, shall be made a matter of record.

§253.8 Exclusions.

(a) Pursuant to the provisions of §253.4(b), the positions specified by paragraphs (b), (c), (d), and (e) of this section, and incumbents thereof, are excluded, to the extent indicated, from the provisions of Subchapter II and the regulations in this part, with the exception of §253.47, and in part 251 of this chapter.

(b) The following positions are excluded from all the provisions of subchapter II (except sections 1217 and 1218) and from the regulations in this part and in part 251 of this chapter (except for §§251.25, 251.31 and 251.32 of this chapter):

(1) The Administrator, Deputy Administrator, Chief Engineer, Chief Financial Officer, Inspector General, Assistant to the Chairman and Secretary, and Assistant to the Secretary for Congressional Affairs of the Panama Canal Commission.

(2) Persons in the active military, naval, or public health service of the United States appointed to the Panama Canal Commission.

(3) Consultants and experts when employed under the provisions of 5 U.S.C. 3109 or other statutory authority.

(4) Any employee excluded by 5 U.S.C. 2105(c) from coverage under laws administered by the Office of Personnel Management.

(5) The Ombudsman.

(6) Positions in the Panama Canal Commission and the incumbents thereof, if a substantial portion of the duties and responsibilities are performed in the United States. All of the rights and privileges which are provided by applicable laws and regulations for citizens of the United States employed in the competitive service, except Title 5 U.S. Code, Chapter 43 pertaining to performance appraisal, are extended to the incumbents of such positions, other than the Secretary and the Assistant to the Secretary for Congressional Affairs of the Panama Canal Commission.

(c) The following positions, and the incumbents thereof, are excluded from the provisions of section 1212 of the Panama Canal Act which provide for merit selection for employment, section 1213 of the said Act and Subparts B and C of the regulations in this part:

(1) Attorneys.

(2) Positions designated as fee-rate positions within the Special Category established by §251.24.

(3) Positions requiring part-time or intermittent services in which the individual appointee will receive during his service year compensation that aggregates not more than 40 percent of the annual salary rate for the first step of grade 3 in the applicable Non-Manual schedule.

(4) Positions designated by the agency as appropriate for use as Student Trainee positions and which are filled under a cooperative work-study agreement between an agency and a college or university approved for participation in such a program by the agency.

(5) Positions that are filled by mentally retarded or severely physically handicapped persons pursuant to regulations issued by the agency. Such regulations shall conform, in substance, to those utilized to authorize appointment of the aforesaid classes of persons in Federal employment in the United States.

(6) The positions in the Panama Canal Commission of Deputy Chief Engineer and Associate Ombudsman.

(7) Student assistant positions.

(8) Any service employee assigned to the residence of the Administrator of the Panama Canal Commission when so designated by the Administrator.

(9) Liaison Services Specialists of the General Services Bureau of the Panama Canal Commission.

(10) Positions at non-manual grade 5 and grade 7 level (not to exceed 35 in number) designated for use by the Panama Canal Commission for filling positions in the Professional and Administrative Career Intern Program with high-potential Panamanian citizens.

(d) All Bureau Directors and Heads of Independent Units of the Panama Canal Commission are excluded from the provisions of sections 1212, 1213, 1215 and 1216 of subchapter II, subparts B and C of this part and subpart B of part 251, except for §§ 251.25, 251.31 and 251.32 of this chapter.

(e) Positions of student assistant, apprentice and learner, and the incumbents thereof, are excluded from the provisions of section 1225(b)(2) of the Panama Canal Act.

(5 U.S.C. 5102, E.O. 12173, 12215)

[47 FR 12956, Mar. 26, 1982, as amended at 49 FR 41025, Oct. 19, 1984; 51 FR 25693, July 16, 1986; 51 FR 33262, Sept. 19, 1986; 51 FR 37182, Oct. 20, 1986; 54 FR 4019, Jan. 27, 1989; 56 FR 1924, Jan. 18, 1991; 56 FR 40556, Aug. 15, 1991]

PANAMA CANAL BOARD OF APPEALS

§ 253.11 Establishment; composition; appointment of members; alternates; employees.

(a) There is established a Panama Canal Board of Appeals to review and determine the classification appeals of employees.

(b) The Board shall consist of five members, all of whom shall be civilians employed by the Federal Government and appointed by the Assistant Secretary of the Army as follows:

(1) One member shall be nominated by the Office of Personnel Management.

(2) Two members shall be selected from among employees of U.S. Government agencies in the Republic of Panama (one from a Department of Defense agency and the other from the Panama Canal Commission) and shall be appointed only after appropriate consultation with the advice from organizations representing such employees.

(3) The remaining members (one from Department of Defense and one from Panama Canal Commission) will be selected by the Assistant Secretary of the Army.

(c) The Assistant Secretary of the Army shall appoint one of the members as Chairman of the Board.

(d) For each member of the Board, two alternate members shall be appointed, following the same criteria as for appointment of members. An alternate shall serve on the Board whenever the member for whom he is the alternate is unable to serve for any reason.

(e) The Panama Area Personnel Board will provide administrative and logistical support necessary to accomplish Board functions.

§ 253.12 Decisions of the Board.

(a) Decisions of the Board on any question or other matter relating to an appeal shall be made by majority vote of its members.

(b) Decisions of the Board are final and conclusive and the agency concerned shall take action in accordance with the decision.

§ 253.13 Classification appeals.

(a) Any employee may request at any time that his employing agency review and revise or adjust the classification, grade, and pay level of his position, or any of them, as the case may be. Such requests for review and revision or adjustment shall be submitted and adjudicated in accordance with the regularly established procedures of the employing agency.

(b) In the event of adverse classification decision by the employing agency, an employee shall have the right to appeal, in writing, to the Panama Canal Board of Appeals.

§ 253.14 Terms of members.

The term of service for each member or alternate member of the Panama Canal Board of Appeals shall be for 2 years, provided that the Assistant Secretary of the Army may, in his discretion, terminate or extend the term of service of any member or alternate member at any time. Individuals who are designated as members or alternate members shall be detailed to the Panama Canal Board of Appeals for such periods as their services are required.

Any hearings on employee appeals will be heard in the Republic of Panama.

§253.15 Appeals procedures.

The Panama Canal Board of Appeals shall formulate the procedures necessary to the performance of the functions prescribed by section 1222 of the Panama Canal Act. Those portions of the procedures establishing time limits for filing appeals, the form in which appeals are to be submitted, and the circumstances under which the personal appearance of an employee or his representative will be authorized, shall be published for the information of all employees.

§253.16 Effective date of decisions.

(a) Decisions of the Panama Canal Board of Appeals shall be binding upon all employing agencies, and shall be effective not later than the beginning of the fourth pay period following the receipt of the decision in the employing agency unless a specific date is stated in the decision in accordance with paragraph (b) of this section.

(b) When the appeal to the Panama Canal Board of Appeals is made within 30 calendar days from the date of an employee's receipt of an adverse decision from his employing agency on a classification appeal provided by §253.13, if it is from an action lowering the grade or pay level of the employee's position, and the decision of the Panama Canal Board of Appeals raises the grade or pay level of the position, the effective date shall be retroactive to the date of the action which lowered the grade or pay level. However, when the decision of the Panama Canal Board of Appeals raises the grade or pay level of the position above the grade or pay level in effect immediately preceding the lowering thereof, retroactivity will apply only to the extent of restoration to the grade or pay level in effect immediately preceding the lowering thereof. Retroactivity may be based only on duties and responsibilities existing at the time of the lowering of the grade or pay level and not on the basis of duties and responsibilities later assigned.

(c) The right to a retroactive effective date under paragraph (b) of this section may be preserved in the discretion of the Panama Canal Board of Appeals upon a showing by the employee that reasons beyond his control prevented him from appealing within the 30-day period referred to in that subparagraph and that he did appeal as promptly as circumstances permitted.

Subpart B—Filling Positions

§253.31 Authority of appointing officers; methods of filling vacancies.

(a) Appointing officers of an agency shall effect personnel actions in accordance with the regulations in this part.

(b) In his discretion an appointing officer may fill any position either by competitive appointment from a Panama Canal Employment System register, by appointment or position change of a present or former Federal employee through noncompetitive action in accordance with the regulations in this part, or, when authorized under §253.43, by temporary appointment. Except as otherwise provided in the regulations in this part, the appointing officer shall exercise his discretion in all personnel actions solely on the basis of merit and fitness. In determining merit and fitness of any person, there shall be no discrimination on the basis of nationality or citizenship, religious or political affiliations, marital status, physical handicap, race, color, sex, age, or national origin.

§253.32 [Reserved]

§253.33 Positions restricted to veterans of United States Armed Forces.

The provisions of 5 CFR 330.401, 330.402 and 330.403 apply in their entirety.

§253.34 Disqualification of applicants.

An applicant may be denied examination and an eligible may be denied appointment for any of the reasons set forth below. A person disqualified for any of the listed reasons may, in the discretion of the PAPB, be denied examination, or denied appointment to any position, for such period as it may determine.

(a) Dismissal from employment for delinquency or misconduct.

(b) Physical or mental unfitness for the position for which applied.

(c) Criminal, infamous, dishonest, immoral, or notoriously disgraceful conduct.

(d) Intentional false statements or deception or fraud in examination or appointment.

(e) Habitual use of narcotics or habitual use of intoxicating beverages to excess.

(f) In the case of citizens of the United States, reasonable doubt as to the loyalty of the person involved to the Government of the United States.

(g) In the case of non-United States citizens, reasonable doubt that the person involved would refrain from committing acts inimical to the interests of the Government of the United States.

(h) Refusal to furnish testimony in regard to matters inquired of arising under the regulations in this chapter, or refusal to furnish testimony in connection with investigations conducted pursuant to Executive Order 10450 of April 1953. (3 CFR, 1949–1953 Comp., p. 936.)

(i) Any legal or other disqualification which makes the applicant unfit for the service.

§ 253.35 Appointments subject to investigation.

(a) All initial appointments or reappointments made under this part shall be subject to such investigation as may be required to establish the appointee's qualifications and suitability for employment.

(b) Except in cases involving intentional false statements, or deception or fraud in examination or appointment, the condition ''subject to investigation'' automatically expires at the end of 1 year after the effective date of the appointment.

(c) For a period of 1 year after the effective date of any appointment subject to investigation, the head of the agency may remove the employee if investigation discloses that he is disqualified for any of the reasons listed in § 253.34. Thereafter removal may be required only on the basis of intentional false statements or deception or fraud in examination or appointment.

§ 253.36 Prohibited practices.

(a) *Coercion in competition.* An applicant for competitive examination, eligible on any register, or officer or employee in the executive branch of the Government may not directly or indirectly persuade, induce, or coerce, or attempt to persuade, induce, or coerce any prospective applicant to withhold filing application, or any applicant or eligible to withdraw from competition or eligibility for the purpose of either improving or injuring the prospects of any applicant or eligible for appointment. The penalty for violation of this section by applicants or eligibles shall be cancellation of application or eligibility, as the case may be. The penalty for violation of this section by an employee shall be as determined by the head of the agency.

(b) *Instruction of applicants.* Employees are forbidden to instruct, either directly or indirectly, or to be concerned in any manner with the instruction of any person or classes of persons with a view to their special preparation for examinations conducted pursuant to the regulations in this part, except as a part of a government authorized or sponsored program. Violations of this restriction shall be considered sufficient cause for removal from the service.

§ 253.37 Examinations.

The Manager, CEO shall be responsible for conducting open competitive examinations for entrance into the service which will fairly test the relative capacity and fitness of the persons examined for the position to be filled. When sufficient competent persons are not available to provide competition, the Manager, CEO may, with the consent of the employing agency, examine and certify for competitive appointment fewer than three individuals.

§ 253.38 Rating competitors.

(a) The subjects in examinations shall be given such relative weight as the Central Examining Office may prescribe and the same rating scale shall be applied to all persons competing in the same examination. Earned ratings will be augmented for eligible veterans in accordance with the provisions of 5

CFR 337.101(b), (c). Eleven points will be added to the earned ratings of eligible Panamanians.

(b) In rating competitors, CEO shall, in the case of veteran's preference eligibles, provide for waiver of the physical standards and requirements in accordance with 5 U.S.C. 3312.

§253.39 Establishment of registers of eligibles.

The names of eligibles (those competitors who meet minimum requirements and are rated as attaining the minimum required rating) shall be entered on appropriate registers in the order outlined below. In the judgment of CEO, eligibility on registers may be established on the basis of earned eligible ratings attained in appropriate examinations for positions in the competitive service.

(a) According to their ratings (including veteran preference and Panamanian preference).

(b) An individual entitled to veteran preference shall be entered ahead of all others having the same rating.

(c) All veterans who have a compensable service-connected disability of 10 percent or more shall be entered at the top of the register in the order of their ratings, except for professional and scientific positions comparable in pay level to positions in grades Non-Manual 9 and above.

(d) When establishing registers, or making certifications therefrom, CEO will provide for priority consideration for career and career-conditional employees of agencies operating in the Republic of Panama who have been separated by reduction in force. However, such priority consideration shall not extend to any position which is in a pay level higher than that from which the employee was separated. Any benefits conferred pursuant to this section are in addition to those conferred by entry of the employee's name on the employing activity's reemployment priority list.

(e) CEO will take appropriate action to insure that veterans of, or persons serving in, the Armed Forces of the United States, receive the same consideration in examinations and entry upon registers as are provided for the competitive service by 5 CFR 332.311, 332.312, 332.313, 332.321, 332.322.

(f) CEO will establish appropriate time periods and procedures for terminating the eligibility of individuals on a register.

§253.40 Certificate for appointment.

(a) Upon receipt of a request for certification of eligibles, a sufficient number of names to permit the appointing officer to consider three eligibles in connection with each vacancy shall be certified from the top of the appropriate register. Certificates may contain fewer than three names, if fewer than three eligibles are available and the requesting agency consents to issuance of such a certificate.

(b) [Reserved]

(c) If the number of eligibles on the register is insufficient, CEO, in consultation with the employing agency, will determine whether selective certification is to be made from another register, whether a recruiting campaign to attract applicants for examination should be initiated, or whether examining action is to be taken in accordance with §253.37 or a temporary appointment authorized in accordance with §253.43.

(d) When there is no register appropriate as a whole for certification for filling a particular position, there may be certified selectively from the most nearly appropriate existing register the names of eligibles who are qualified for the particular position. Such eligibles shall be certified in the order of their ranking. Eligibles on the register may, when appropriate, be rerated on the basis of the particular requirements of the position.

(e) Certification shall be made without regard to sex, unless the appointing officer requests and justifies referral of eligibles of a specified sex.

(f) Certification must be limited to eligibles residing in the Republic of Panama except when persons possessing the requisite skills and qualifications are not found in the Republic of Panama.

§253.41 Selection from certificates.

Selections from certificates are made by application of either the rule of three or the rule of ten.

(a) *Rule of three.* When selecting from a certificate of eligibles, an appointing official shall, with sole reference to merit and fitness, make the selection for the first vacancy from the highest three eligibles available for appointment on the certificate. For the second vacancy, the selecting official must make selection from the three highest eligibles remaining on the certificate. Each succeeding vacancy must be filled in like manner subject to the rules in § 253.40. The rule of three applies to selections involving:

(1) All United States Wage Base positions except those of apprentice, floating equipment trainees at the grade FE–5 and FE–7 levels and marine engineer trainees at the grade ME–7 level; and

(2) United States citizens.

(b) *Rule of ten.* When selecting from a certificate of eligibles, an appointing official shall, with sole reference to merit and fitness, make the selection for the first vacancy from the highest ten eligibles available for appointment on the certificate. For the second vacancy, the selecting official must make selection from the ten highest eligibles remaining on the certificate. Each succeeding vacancy must be filled in like manner subject to the rules in § 253.40. The rule of ten applies to selections involving:

(1) All Canal Area Wage Base positions filled from pre-rated inventories which includes the positions of firefighter and firefighter trainee, and

(2) United States Wage Base positions of apprentice, floating equipment trainees at the grade FE–5 and FE–7 levels and marine engineer trainees at the grade ME–7 level.

The rule of ten shall not be applied in any situation where a United States applicant is among the top three candidates available.

(c) An appointing officer is not required to consider any eligible:

(1) Who has been considered for three or ten separate appointments, as applicable, from the same or different certificates for the same position, or

(2) To whose certification for the particular position the officer makes an objection that is sustained by the CEO for any of the reasons stated in § 253.34 or for other reasons considered by the CEO to be disqualifying for the particular position. The length of a non-Panamanian candidate's previous service or residence in foreign areas may be a valid qualification and selection factor in filling positions in an agency having an established policy for periodic rotation of non-Panamanian citizens.

(d) When an appointing officer passes over a veteran-preference eligible and tentatively selects a non-preference eligible, the provisions of 5 CFR 332.406 apply except that the CEO shall exercise the authority vested in the Office of Personnel Management.

[56 FR 1924, Jan. 18, 1991]

§ 253.42 Appointments from registers.

(a) Except as provided by paragraph (d) of this section, a ''Canal Area Career-Conditional Appointment'' shall be given to an eligible selected from a register for other than temporary or term appointment.

(b) Upon completion by the appointee of 3 years of creditable service, his career-conditional appointment shall be automatically converted to a ''Canal Area Career Appointment.'' As used in this paragraph, ''creditable service'' means all substantially continuous service with the Federal Government since initial non-temporary civilian appointment, including any service in the competitive or excepted service, or intervening service in the legislative or judicial branches or in the Armed Forces of the United States. A break in service of 30 days or less shall be considered substantially continuous service. Breaks in service of more than 30 days shall not be considered substantially continuous service unless the head of the agency excepts particular types of cases from this requirement. In making such exceptions, the agency will be guided by the instructions published for the competitive service in the Federal Personnel Manual.

(c) An eligible given a Canal Area Career-Conditional Appointment shall be required to serve a probationary period of 1 year. Prior Federal service may be counted toward completion of the probationary period as provided in the Federal Personnel Manual. The employing agency shall utilize the probationary period as fully as possible to determine the fitness of the employee

and shall terminate his services during such period if he fails to demonstrate fully his qualifications for continued employment. The employee shall automatically acquire a merit status upon satisfactory completion of probation.

(d) An eligible selected from a register for other than a temporary or term appointment shall be given a Canal Area Career Appointment if:

(1) He is a Federal employee serving under a career appointment in the competitive service, a permanent appointment in the excepted service, or a Canal Area Career Appointment;

(2) He is a former Federal employee who once met the service requirement for a career appointment in the competitive service, a permanent appointment in the excepted service, a Canal Zone Career Appointment, or a Canal Area Career Appointment.

(e) An eligible selected from a register for career appointment shall be required to serve a probationary period, subject to the same conditions as apply to a career-conditional appointment.

§ 253.43 Temporary and term appointments.

(a) An agency may make temporary limited appointments for periods not in excess of 1 year, and term appointments for periods of more than 1, but not in excess of 4 years. In making such appointments, the agency will be guided by the instructions published for the competitive service in the Federal Personnel Manual. A person so appointed shall not acquire merit status by reason of such appointment.

(b) Term employees are required to serve a 1-year trial period, during which they shall be entitled to the same limited protection as is accorded probationers under the Panama Canal Employment System. In adverse actions, term employees are entitled to the rights accorded career and career-conditional employees under the Panama Canal Employment System except while they are serving the 1-year trial period and when the term appointment has expired.

§ 253.44 Noncompetitive appointments.

(a) Appointing officers may noncompetitively appoint a current Federal employee who has a merit status, a competitive status, or who is serving probation at the time of appointment. Appointing officers may noncompetitively reappoint a former Federal employee who has a merit status, a competitive status, or who was serving probation at the time of separation. Eligibility for such reappointment will be subject to the following conditions:

(1) Former Federal employees who have never completed the service requirement for Canal Zone or Canal Area career appointment or for career appointment in the competitive service may be reappointed only within 3 years following the date of their separation, except that periods of temporary employment shall serve to extend the three-year period. This time limit does not apply to former employees entitled to veteran preference.

(2) Former employees who have once completed the service requirement for Canal Zone or Canal Area career appointment or for career appointment in the competitive service may be reappointed without time limitation.

(b) Appointing officers may noncompetitively appoint an individual who is certified by the Director of ACTION as having served satisfactorily as a Volunteer or Volunteer Leader under the Peace Corps Act, or as a VISTA volunteer under the Economic Opportunity Act. Such appointments shall be made in accordance with the procedures and regulations in effect for the appointment of such persons to positions in the competitive service.

(c) A Student Trainee who has successfully completed his cooperative work-study program may be appointed noncompetitively to a position at grade 5 or grade 7 in the applicable Non-Manual schedule for which he meets the qualification requirements, with the exception of any written test requirements, in the field of work in which he received his training, provided:

(1) He has successfully completed all the requirements for a bachelor's degree, including any specialized courses required for the particular position for which he has been in training;

(2) He has completed at least 6 months work experience (i.e., 6 months in a pay status) as a Student Trainee

in the agency that recommends his appointment; and

(3) His employing agency recommends him for noncompetitive appointment within 90 days after completion of his work-study program.

(d) Employees appointed to positions excluded from this subpart pursuant to § 253.8(c)(5) may have their appointments converted to career or career-conditional appointments in accordance with regulations prescribed by the PAPB. Such regulations shall generally conform to the regulations of the Office of Personnel Management for conversion of excepted service appointments of physically or mentally handicapped persons to career or career-conditional appointments.

(e) A Professional and Administrative Career Intern Program participant who has successfully completed at least one year of the prescribed training may be noncompetitively appointed to a position at non-manual grades 7 and above for which he/she meets the qualification requirements.

(5 U.S.C. 5102, E.O. 12173, 12215)

[47 FR 12956, Mar. 26, 1982, as amended at 51 FR 33262, Sept. 19, 1986]

§ 253.45 Tenure following noncompetitive appointment.

(a) The noncompetitive appointment of a current or former Federal employee who has not completed the service requirement for Canal Area or Canal Zone career appointment or career appointment in the competitive service shall be made as a Canal Area Career-Conditional Appointment. The appointment shall be automatically converted to a Canal Area Career Appointment upon completion of the service requirement. A merit status shall be acquired upon satisfactory completion of any required probationary period.

(b) The noncompetitive appointment of a former or current Federal employee who has once completed the service requirement for Canal Zone or Canal Area Career Appointment or for career appointment in the competitive service shall be made as Canal Area Career Appointment.

(c) Former or current Federal employees who did not complete any required probationary periods prior to noncompetitive appointment shall be required to serve a probationary period of one year following appointment.

(d) The noncompetitive appointment of Volunteer or Volunteer Leader under the Peace Corps Act or VISTA volunteer under the Economic Opportunity Act shall be made as Canal Area Career-Conditional Appointment; shall be subject to satisfactory completion of a probationary period of one year; and shall be automatically converted to a Canal Area Career Appointment upon completion of the service requirement. A merit status shall be acquired upon satisfactory completion of probation.

(e) The noncompetitive appointment of a person who successfully completed a cooperative work-study program or a Professional and Administrative Career Intern Program under paragraph (c) or (e), respectively, of § 253.44 shall be made as a Canal Area Career-Conditional Appointment or Canal Area Career Appointment and may be subject to the satisfactory completion of a probationary period of one year. Canal Area Career-Conditional Appointments shall be automatically converted to Canal Area Career Appointments upon completion of the Service requirements.

(5 U.S.C. 5102, E.O. 12173, 12215)

[47 FR 12956, Mar. 26, 1982, as amended at 49 FR 41025, Oct. 19, 1984]

§ 253.46 Promotion, demotion, reassignment, and transfer.

(a) Appointing officers may, in their discretion, promote, demote, reassign, or transfer employees who are serving under Canal Area Career or Career-Conditional Appointments, subject to the provisions of this section and in accordance with the appropriate qualification standards established by the PAPB for the position. Such actions will be based solely on the merit of the employee and upon his qualifications and fitness to hold the positions concerned. Such actions for employees serving under temporary or term appointments will be subject to such regulations as the agency may prescribe. In preparing such regulations the agency will be guided by the instructions published for the competitive service in the Federal Personnel Manual.

(b) Employing agencies shall establish a promotion plan for all employees which is consistent with the Panama Canal Treaty and insofar as practicable, with the provisions of the merit promotion plan developed by the Office of Personnel Management for the competitive service.

§ 253.47 Rotation of personnel.

(a) United States citizen employees and other non-Panamanian employees appointed to a position subject to this part after September 30, 1979 shall be subject to a policy of periodic rotation in accordance with the Panama Canal Treaty and related agreements, except that the following individuals shall not be subject to such policy:

(1) An individual who was a permanent employee of the Panama Canal Company or Canal Zone Government on September 30, 1979 and was transferred to a position in the Panama Canal Commission or another agency in the Republic of Panama on October 1, 1979 without a break in service.

(2) An individual who was separated from the Panama Canal Company or Canal Zone Government by reason of a reduction in force on September 30, 1979 and was appointed to a position in the Panama Canal Commission before April 1, 1980, or

(3) An individual who was employed by a department on September 30, 1979 and continues in employment with an agency, other than the Panama Canal Commission, without a break in service.

(b) The head of each agency shall establish a policy of periodic rotation in accordance with paragraph (a) of this section and other applicable law. Such policy may except positions from rotation for sound administrative reasons. This section shall not preclude an agency other than the Commission from adopting a policy of periodic rotation of employees pursuant to other authority.

(c) Notwithstanding any Canal Area Career or Career-Conditional Appointment or acquisition of merit status, an employee may, in accordance with an agency's rotation policy, be removed from service after completion of the service period under the rotation policy established under this section.

[47 FR 12956, Mar. 26, 1982, as amended at 51 FR 33262, Sept. 19, 1986]

Subpart C—Conversion to Canal Area Career or Career-Conditional Appointments

§ 253.71 Eligibility.

Incumbents of positions made subject to Subpart B of this part by revocation of an exclusion in § 253.8 or by other action, may be retained in their positions. Each retained incumbent without a personal or competitive status who is serving in a continuing position under a non-temporary appointment will become eligible for conversion to a Canal Area Career or Career-Conditional Appointment provided:

(a) He rendered 6 months satisfactory service in the position immediately prior to its inclusion under Subpart B of this part. Periods to be counted toward the 6-month period as an exception to the requirement for actual service shall be determined in accordance with the instructions applying to the competitive service as published in Chapter 315 of the Federal Personnel Manual.

(b) He meets the applicable qualification and suitability standards.

(c) His employing agency submits a timely recommendation which is approved by the PAPB.

§ 253.72 Procedure.

The employing agency shall recommend to the PAPB that the appointment of an eligible employee be converted. The recommendation shall be submitted not later than one year after the date that the position is brought within the coverage of Subpart B of this part. Upon approval by the PAPB, the conversion is effective as of the date of the employing agency's recommendation. Notice of the PAPB's decision together with the reasons therefor shall be given in writing to the agency and employee concerned and be made a part of the employee's official personnel folder.

§ 253.73 Tenure.

(a) *Preservation of tenure.* Neither a conversion action, nor a recommendation for conversion, shall serve to reduce an employee's retention standing for reduction-in-force purposes.

(b) *Tenure following recommendation.* Upon submission of a recommendation for conversion, the nominee's retention standing for reduction in force is in Retention Group I if he is already in that group or if he meets the service requirement for a Canal Area Career Appointment; otherwise, his retention standing is in Tenure Group II.

(1) An employee reverts to his previous tenure group if the recommendation is returned without final action, and remains in this group until such time as the recommendation is resubmitted.

(2) Irrespective of his previous retention standing, an employee is placed in Tenure Group III if the PAPB disapproves the recommendation for conversion.

(c) *Tenure following conversion.* Conversion will be to Canal Area Career Appointment if the employee meets the service requirement for such appointment; otherwise, conversion will be to Canal Area Career-Conditional Appointment. However, retention standing for reduction-in-force purposes will be governed by paragraph (a) of this section. All conversions will be subject to satisfactory completion of a one-year probationary period if such probation has not been completed prior to the time of conversion.

§ 253.74 Acquisition of merit status.

An employee who is converted under this subpart acquires a merit status upon completion of any required probationary period.

§ 253.75 Employees not recommended for conversion.

(a) Employees who are not recommended for conversion, or whose conversion is disapproved, will be retained in status quo and placed in Tenure Group III until separated or until they receive a competitive appointment.

(b) Employees retained in status quo may be noncompetitively changed to other positions upon meeting the requirements established pursuant to § 253.46(a) for the noncompetitive movement of employees serving under temporary appointments.

(c) Employees retained in status quo are subject to displacement by eligibles on registers.

(d) Employees serving under temporary appointments on the date their positions are made subject to Subpart B of this part will be considered as having been converted to a temporary appointment under § 253.43 and may be retained until expiration of their current appointments.

Subpart D—Conversion From Excluded and Temporary Appointments to Canal Area Career or Career-Conditional Appointments

§ 253.76 Eligibility.

A temporary employee may be converted to a Canal Area Career or Career-Conditional Appointment provided:

(a) He rendered at least one year of satisfactory continuous service with the agency in which he is to be converted and the service immediately preceded the conversion;

(b) The conversion is to a position in the same wage category as that held by the employee prior to the conversion;

(c) The conversion is to either:

(1) A manual category position at any grade from MG–1 to MG–9 and the employee to be converted ranks among the top 50% of the register of eligibles or;

(2) A non-manual category position filled from a pre-rated inventory at any grade from NM–1 to NM–5 provided the employee to be converted ranks among the top 25% of the register of eligibles;

(d) There is no United States citizen within reach in accordance with the rule of three, and no preference eligible would be passed over; and

(e) The employee is not a United States citizen.

[56 FR 1924, Jan. 18, 1991]

§ 253.77 Procedure.

The employing agency shall obtain approval from the Central Examining Office prior to converting temporary

employees to Canal Area Career or Career-Conditional Appointments. Employees converted under this subpart will be treated as if they had been appointed from a register as provided in § 253.42.

[56 FR 1924, Jan. 18, 1991]

Subpart E—Performance Rating

§ 253.181 Rating system.

Employing agencies shall establish a performance rating system for employees generally patterned after the Office of Personnel Management guidelines.

Subpart F—Training

§ 253.201 Training programs.

Agencies shall, in accordance with any obligation established by the Panama Canal Treaty or the agreements in implementation thereof, establish training programs for Panamanian employees and apprentices in order to increase the number of Panamanian nationals qualified to assume positions as positions become available. Except as provided in the said treaty and agreement, there shall be no discrimination on the basis of citizenship with regard to training.

Subpart G—Military Service

§ 253.221 Rights of employees.

The rights of employees called to active military duty in the Armed Forces of the United States will be determined in accordance with 5 CFR Part 353.

Subpart H—Adverse Personnel and Reduction-in-Force Actions

§ 253.241 Applicability of existing law and civil service regulations.

(a) The provisions of 5 U.S.C. 7501 are applicable to the removal or suspension of those employees to whom such provisions were applicable immediately prior to January 19, 1959.

(b) The provisions of 5 CFR Part 752, and Title 5, United States Code, pertaining to adverse actions, are applicable to preference eligibles to the extent and in the manner specified therein.

(c) The provisions of 5 CFR Part 351 and Title 5, United States Code, pertaining to reductions in force, are applicable to all reduction-in-force actions.

(d) The provisions of 5 U.S. Code, section 5596 shall be applicable to any person whose removal or suspension under an agency's system established by § 253.262 is determined to have been unjustified or unwarranted after review in accordance with procedures of the employing agency.

§ 253.242 Probationary employees.

Any employee serving a probationary period shall be given a full and fair trial in the duties of the position in which appointed. If the performance of his duties or his conduct during the probationary period is not satisfactory to the employing agency, his services may be terminated by notifying him in writing of the reasons for his separation and of its effective date. An employee's services may also be terminated during the probationary period for reasons based in whole or in part on conditions arising prior to his appointment. The employing agency shall notify him in writing of the reasons for his separation and its effective date.

Subpart I—Grievances and Appeals

§ 253.261 Grievance procedures.

Each employing agency shall make available to employees a grievance procedure established by the agency, except as may be otherwise provided by a negotiated grievance procedure.

§ 253.262 Adverse actions and appeals.

Each agency shall establish an adverse action and appeals system under which the provisions of 5 CFR Part 752, are administratively extended to employees in categories corresponding to those in the U.S. competitive service to which that part applies. Appeals to the Merit Systems Protection Board shall not, however, be so extended by such administrative action.

§ 253.263 Appeals from applicants or eligibles.

Applicants and eligibles who have reason to believe that the regulations

in this part were not followed in rating their examinations or in making selections for appointment may appeal to CEO. In the event they are not satisfied with CEO's decision, and they can show reason to believe that CEO's action was arbitrary, capricious, or in violation of these regulations, they may request a review of the decision by the PAPB.

Subpart J—Records and Reports

§ 253.291 Applicability of Federal Personnel Manual.

(a) The provisions of Chapter 296 of the Federal Personnel Manual will, except as indicated below, apply to the preparation of notifications of personnel action taken under the regulations in this chapter.

(1) All appointment and conversion actions will be prefaced by the term ''Canal Area'' or ''CA'' and will be identified as taken under the authority of the regulations in this chapter.

(2) The noncompetitive appointment of a former Federal employee under the provisions of § 253.44 will be termed a reappointment rather than a reinstatement.

(b) The provisions of Chapters 293 and 298 of the Federal Personnel Manual will apply, respectively, to the maintenance of employment records and the reporting of employment, except that the Official Personnel Folders of non-U.S. citizen employees who separate from service may be retained by the employing agency for not to exceed two years following separation. Upon expiration of this period, the Official Personnel Folders will be transferred to the National Personnel Records Center for permanent storage.

[51 FR 33262, Sept. 19, 1986]

Subpart K—Labor Management Relations

§ 253.311 Labor-management and employee relations.

Labor-management and employee relations of agencies, their employees and the exclusive representative of employees in an appropriate unit in an agency shall be governed and regulated solely by Chapter 71 of title 5, United States Code and other applicable laws, rules and regulations of the United States.

Subpart L—Equal Employment Opportunity

§ 253.331 Policy concerning equal employment opportunity.

(a) All Personnel actions affecting employees or applicants for employment shall be made free from any discrimination based on race, color, religion, sex, age, national origin, handicapping condition or marital status.

(b) Agencies may adopt regulations to carry out the provisions of this subpart and may provide for appeals of personnel actions alleged to be based upon discrimination prohibited by this subpart.

(Secs. 1211 through 1225 of the Panama Canal Act of 1979; 93 Stat. 463; Executive Order 12215)

PART 255—[RESERVED]

PART 256—SALARY OFFSET FOR FEDERAL EMPLOYEES WHO ARE INDEBTED TO THE UNITED STATES

Sec.

256.1 Collection of debts by offset; scope of regulations.
256.2 Definitions.
256.3 Pay subject to offset.
256.4 Advance notice of debt; request for records; submission of information.
256.5 Formal notice to employee.
256.6 Request for a hearing; prehearing submissions.
256.7 Hearings; time, date, and location.
256.8 Consequence of employee's failure to meet deadline dates.
256.9 Hearing procedures.
256.10 Representation.
256.11 Applicable legal principles.
256.12 Standards for determining extreme financial hardship.
256.13 Collection of debts on behalf of other agencies by offsetting the pay of a Commission employee.

AUTHORITY: 5 U.S.C. 5514, as amended by section 5 of Public Law 97–365, 96 Stat. 1751–1752.

SOURCE: 50 FR 34123, Aug. 23, 1985, unless otherwise noted.

§256.1 Collection of debts by offset; scope of regulations.

(a) If it is determined that an employee of the United States is indebted to the Panama Canal Commission, the employee's pay may be offset to satisfy that indebtedeness under the procedures set forth in this part.

(b) Debts owed by Commission employees to other agencies of the United States may be recovered by offset against the employee's pay in accordance with §256.13. Similar provision in the regulations of other agencies permit the Commission to recover by offset debts owed to the Commission by the employee of another agency, if the Commission first complies with the provisions of §§256.1 through 256.12 of this part.

(c) An offset against pay shall be carried out in accordance with the standards established under the Federal Claims Collection Act of 1966, as amended (31 U.S.C. 3701 *et seq.*).

(d) The regulations in this part do not apply to, and do not impair the United States' authority with regard to, the collection of a debt, by offset or by other means, if the debt is owed to the United States by a Federal employee and the debt arose under the Internal Revenue Code of 1954 as amended (26 U.S.C. 1 *et seq.*), or in any other circumstances in which collection of a debt by salary offset is explicitly provided by Federal statute, such as the collection authority granted the Commission pursuant to 22 U.S.C. 3645.

(e) These regulations do not preclude an employee from questioning the amount or validity of a debt by submitting a claim to the General Accounting Office, but the Commission need not suspend the collection of the debt because of the filing of such a claim.

(f) These regulations do not preclude the compromise, suspension or termination of collection actions where appropriate under the standards set forth at 4 CFR 101.1 *et seq.*

(g) An employee's involuntary payment of all or any portion of an alleged debt being collected pursuant to this part shall not be construed as a waiver of any rights which the employee may have under this subpart or any other provision of law, except as otherwise provided by law.

(h) Amounts paid or deducted pursuant to this subpart shall be promptly refunded to an employee if the debt is waived or otherwise found not owing to the United States or if the Commission is directed by a competent judicial or administrative authority to refund amounts deducted from an employee's current pay.

(i) The procedures in this part and the collection of debts by the Panama Canal Commission shall be carried out by the Chief Financial Officer.

(j) The Commission will not initiate salary offset to collect a debt under this subpart more than ten years after the Government's right to collect the debt first accrued, unless facts material to the Government's right to collect the debt were not known and could not reasonably have been known by the official or officials of the Government who are charged with discovering and collecting the debt in question.

§256.2 Definitions.

As used in this part:

Agency shall have the same meaning as prescribed in 5 CFR 550.1103.

Creditor agency means the Federal agency to which the debt is owed.

Day, unless specified otherwise, means a calendar day, and time limits are to be computed by counting calendar days, rather than only those days on which Commission offices are open for business.

Debt means an amount owed to the United States from any source, except as provided in this part. Such debts include, but are not limited to, those arising from loans insured or guaranteed by the United States, fees, leases, rents, royalties, services, sales of real or personal property, overpayments, fines penalties, damages, interest forfeitures, etc. Interest, penalties, and administrative costs may be assessed on debts collected pursuant to this part. These charges shall be assessed or waived in accordance with the provisions of 4 CFR 102.13.

Delinquent debt means (a) a debt which has not been paid, or for which arrangements for payment have not been agreed to by the creditor agency and the employee, by the date specified in the creditor agency's initial written notification or (b) a debt for which the

employee fails to comply with the terms of payment arrangements agreed to with the creditor agency.

Disposable pay shall have the same meaning as prescribed in 5 CFR 550.1103.

Employee means a current—

(a) Civilian employee, as defined in 5 U.S.C. 2105;

(b) Member of the Armed Forces or Reserves of the United States;

(c) Employee of the United States Postal Service; or

(d) Employee of the Postal Rate Commission.

Pay means basic pay, premium pay, special pay, incentive pay, retired pay, retainer pay, or, in case of an employee not entitled to basic pay, other authorized pay.

Paying agency means the Federal agency or branch of the Armed Forces or Reserves employing the individual or disbursing his or her current pay.

Salary offset means an administrative offset to collect a debt under 5 U.S.C. 5514 by deduction at one or more officially established pay intervals from the current pay of an employee without his consent.

Waiver means the cancellation, remission, forgiveness or nonrecovery of a debt allegedly owed by an employee to an agency as permitted or required by 5 U.S.C. 5584, 5 U.S.C. 8346(b), 10 U.S.C. 2774, or 32 U.S.C. 716, or any other law.

§ 256.3 Pay subject to offset.

(a) An offset from an employee's pay from the Commission may not exceed 15 percent of the employee's disposable pay, unless the employee agree in writing to a larger offset.

(b) If collection in one lump-sum payment would exceed 15 percent of the employee's disposable pay, an offset shall be made biweekly or at officially established pay intervals from the employee's current pay account. Whenever possible, the installment payments shall be sufficient in size to liquidate the debt during a period not greater than the anticipated period of active duty or employment of the debtor employee.

(c) If an employee retires, resigns, or is discharged, or if his employment period or period of active duty otherwise ends before collection of the debt is completed, an offset may be made from subsequent payments of any nature (*e.g.*, final salary payment, lump-sum leave, etc.) due the individual from the employing agency, to the extent necessary to liquidate the debt. If the final payment due the employee is insufficient to satisfy the debt, the creditor agency shall take steps necessary to provide for payment of the debt by administrative offset from payments of any kind due the former employee from the United States pursuant to 31 U.S.C. 3716. (See 4 CFR 102.4)

§ 256.4 Advance notice of debt; request for records; submission of information.

(a) Before initiating an offset proceeding, the Chief Financial Officer of the Panama Canal Commission will establish an individual administrative case file for each employee to be covered by the offset proceeding and notify the employee—

(1) That he has determined that the employee is indebted to the United States in a specific amount as the result of a debt due and owing to the Panama Canal Commission;

(2) That he intends to satisfy that indebtedness by offsetting 15 percent of the employee's disposable pay unless the employee can demonstrate that he is not indebted to the United States or that the proposed offset schedule would produce an extreme financial hardship, as defined in § 256.12 of this part;

(3) If the applicable law includes a provision requiring waiver of debts in certain circumstances, notice of the waiver provision, including a description of the conditions under which a waiver must be granted, notice that the employee has an opportunity to request such a waiver, and instructions on how to apply for a waiver; and

(4) The options available to him and time limits within which submission of additional information or documents must be made.

(b)(1) An employee who has been notified of the Chief Financial Officer's determination of the existence and amount of the debt and the proposed offset schedule, may submit to him a request—

(i) Not later than 10 days from the date the employee receives the notice, for a copy of the records in the possession of the agency relating to the debt,

(ii) Within the time specified in paragraph (c) of this section, that he reconsider his determination of the existence or amount of the debt,

(iii) Within the time set forth in paragraph (c) fo this section, that he reconsider the proposed offset schedule, on the basis that it would produce an extreme financial hardship for the employee, and

(iv) Within the time set forth in paragraph (c) of this section, that he consider a request for waiver of the debt, if a waiver provision is applicable to the debt.

(2) If the employee requests a reconsideration of the determination of the existence or amount of the debt, the employee shall submit a statement, with supporting documents, indicating why the employee believes he is not so indebted.

(3) If the employee requests a reconsideration of the proposed offset schedule, the employee shall file an alternative proposed offset schedule and a statement, with supporting documents, showing why the schedule proposed by the agency would produce an extreme financial hardship for the employee. The supporting documents must show, for the employee and his spouse and legal dependents, for the one-year period preceding the receipt of the notice and for the repayment period proposed by the employee in his or her offset schedule, the—

(i) Income from all sources,

(ii) Assets,

(iii) Liabilities,

(iv) Number of legal dependents,

(v) Expenses for food, housing, clothing, and transportation,

(vi) Medical expenses, and

(vii) Exceptional expenses, if any.

(c) An employee who requests a reconsideration of the existence or amount of the debt, or the proposed offset schedule, shall submit his statement, with supporting documents, to the Chief Financial Officer no later than—

(1) Forty-five days from the date the employee receives the notice of the debt, if he does not make a timely request for records under paragraph (b)(1)(i) of this section; or

(2) Forty-five days from the date the employee receives the records, if a timely request for records was made.

(d) If the employee submits a timely request for reconsideration under paragraph (b) of this section, together with the required documents, the Chief Financial Officer will reconsider whether the employee is indebted to the United States, the amount that the employee owes, or whether the proposed offset schedule is appropriate.

(e) If the employee files a timely request for waiver of the debt, the Chief Financial Officer will consider that request. If the employee files a request for waiver that is not timely, the request will be considered if he establishes that his failure to file within the time prescribed was because of circumstances beyond his control or because he did not receive the notice of the time limit and was not otherwise aware of it.

(f) The Chief Financial Officer's decision on the employee's request for reconsideration will be based on agency records and the material submitted by the employee. He shall promptly notify the employee of his decision concerning the existence and amount of the debt and the appropriateness of the employee's proposed alternative offset schedule.

(g) If the Chief Financial Officer determines that the employee is indebted to the United States, he will include in the notice to the employee the following matters:

(1) A statement of the reasons for the decision regarding the indebtedness, including, if applicable, the reasons for any reduction of the amount of the indebtedness; and

(2) The notice described in § 256.5.

(h) If the Chief Financial Officer determines that his original offset schedule, or a modified schedule (other than the one proposed by the employee) will not impose an extreme financial hardship on the employee, he will include in the notice to the employee—

(1) A statement of the reasons for his conclusion that his original or modified offset schedule will not impose an extreme financial hardship, and

(2) The notice described in § 256.6.

§ 256.5 Formal notice to employee.

(a) At least 30 days before requesting an agency to offset the pay of an employee or commencing the offset of the pay of an employee of the Commission, the Chief Financial Officer will send the employee a notice stating—

(1) The nature and amount of the debt he has determined that the employee owes the United States;

(2) His intention to collect the debt by offset;

(3) The amount that the agency determines will be offset from the employee's disposable pay, including the proposed schedule for the deductions;

(4) Unless such payments are excused in accordance with 4 CFR 102.13, an explanation of the creditor agency's requirements concerning interest, penalties, and administrative costs;

(5) The employee's right to inspect and copy Government records relating to the debt or, if the employee or his representative cannot personally inspect the records, to request and receive a copy of such records.

(6) If not previously provided, the opportunity (under terms agreeable to the Commission) to establish a schedule for the voluntary repayment of the debt or to enter into a written agreement to establish a schedule for repayment of the debt in lieu of offset. The agreement must be in writing, signed by both the employee and the Commission, and documented in the Commission's files (4 CFR 102.2(e));

(7) If the applicable law includes a provision requiring waiver of debts in certain circumstances, notice of the waiver provision, including notice of the period within which such a waiver must be requested and an explanation of the conditions under which waiver may be granted;

(8) That amounts paid or deducted for the alleged debt which are later waived or found not owed to the United States will be promptly refunded to the employee;

(9) The employee's right to a hearing on the Chief Financial Officer's determination concerning the existence and amount of the debt and the proposed offset schedule. This notice shall include a description of the applicable hearing procedures and requirements;

(10) That the timely filing of a petition for hearing on the existence or amount of a debt or the offset schedule will stay the commencement of collection proceedings; but that a request for a waiver or a hearing on the employee's credibility of veracity in connection with a request for a permissive waiver will not stay the collection proceedings;

(11) That a final decision on the hearing (if one is requested) will be issued at the earliest practical date, but not later than 60 days after the filing of the petition requesting the hearing unless the employee requests and the hearing official grants a delay in the proceedings;

(12) The method and time period for requesting a hearing; and

(13) That any knowingly false or frivolous statements, representations, or evidence may subject the employee to:

(i) Disciplinary or adverse action;

(ii) Penalties under the False Claims Act, sections 3729–3731 of Title 31, United States Code, or any other applicable statutory authority; or

(iii) Criminal penalties under sections 286, 287, 1001, and 1002 of title 18, United States Code or any other applicable statutory authority.

(b) The formal notice prescribed by paragraph (a) of this section, is not applicable to any pay adjustment arising out of an employee's election of coverage or a change in coverage under a Federal benefits program requiring periodic deductions from pay, if the amount to be recovered was accumulated over four pay periods or less.

§ 256.6 Request for a hearing; prehearing submissions.

(a) An employee's request for a hearing or waiver under § 256.5 must be filed not later than 15 days from the date of receipt of the formal notice.

(b) Not later than three days prior to a scheduled hearing date, the employee may notify the Chief Financial Officer of his election to have the matter determined by the hearing official solely on the basis of written submissions. If no such election is filed by the employee, the hearing shall be conducted as an oral proceeding.

(c) If an employee files a timely petition for a hearing, the Chief Financial Officer will—

(1) Notify the employee of the time, date, and location of the hearing, if a determination solely on the basis of written submissions has not been requested; and

(2) Provide copies of the records in the possession of the agency relating to the employee's debt to the hearing official and, if he has not previously received the records, to the employee.

(d) If the employee files a request for a hearing that is not timely, he will be granted a hearing if he establishes that his failure to file within the time prescribed was because of circumstances beyond his control or because he did not receive the notice of the time limit and was not otherwise aware of it.

(e) If the employee contests the Commission determination of the existence or amount of the debt, he shall, not later than 10 days prior to the scheduled hearing date, file the following documents:

(1) A statement of the reasons why the employee believes that the Commission determination of the existence or amount of the debt was clearly erroneous. The statement shall include a recitation of the facts on which the employee relies to support his belief and any legal arguments supporting his position;

(2) A list of witnesses the employee intends to call at the hearing and a statement of why their testimony is desired; and

(3) A copy of the records that the employee intends to introduce at the hearing, if they differ from those provided by the Commission.

(f) If the employee contests the Commission's proposed offset schedule, he shall, not later than 10 days prior to the scheduled hearing date, file the following:

(1) A proposed alternative offset schedule;

(2) A statement of the reasons why the proposed offset against disposable pay will produce an extreme financial hardship;

(3) The information required in §256.4(b)(3) of this part;

(4) A list of witnesses the employee intends to call at the hearing and a statement of why their testimony is desired; and

(5) A copy of the records that the employee intends to introduce at the hearing, if they differ from those provided by the Commission.

(g) The Chief Financial Officer shall file, not later than 10 days prior to the scheduled hearing date, a list of witnesses that the Commission intends to call at the hearing.

(h) Material submitted by an employee in connection with a request for reconsideration or for a waiver under §256.4 need not be resubmitted in connection with the proceeding under this section.

(i) Material required to be filed under paragraphs (e), (f), and (g) of this section shall be filed with the hearing official and copies shall be provided to the opposing party.

§256.7 Hearings; time, date, and location.

(a) If an employee files a timely request for a hearing under §256.6, the Commission will select the time, date, and location for the hearing. A hearing will be granted on a request for a waiver only if such waiver is provided for by law and if the request, in the judgment of the Chief Financial Officer, raises issues of veracity or credibility of the employee. To the extent feasible, the Commission will select a date and location that is convenient for the employee.

(b) For an employee who resides on the Isthmus of Panama, the hearing will be held in Panama. Hearings may be scheduled in New Orleans or Washington, D.C. for persons not residing in Panama.

§256.8 Consequence of employee's failure to meet deadline dates.

(a) An employee shall be considered to have waived his right to a hearing, and will have his disposable pay offset in accordance with the offset schedule proposed by the Commission, if the employee fails to appear at the time fixed for a hearing, or fails to file the required submissions under §256.6 within five days after the filing date established under that section.

(b) The hearing official may excuse the employee's failure to meet any of

the foregoing requirements if the employee shows that he exercised due diligence and that there is good cause for his failure to meet the requirements.

§ 256.9 Hearing procedures.

(a) The hearing will be conducted by a hearing official who is not an employee of the Commission or otherwise under its supervision or control, except that hearings on waivers may be conducted by an employee of the Commission.

(b) The hearing official shall prepare a summary record of the hearing, which will be maintained by the Commission as a part of the record of the offset procedures; however, no transcript of the hearing shall be made.

(c) The hearing shall not be conducted in accordance with formal rules of evidence with regard to the admissibility or use of evidence, except that the hearing official shall limit the evidence to testimony and documents which are relevant to the issues being considered.

(d) At the hearing, the employee and the Commission may introduce evidence and may call witnesses, consistent with the provisions of paragraph (c) of this section. Witnesses shall testify under oath and are subject to cross-examination.

(e) If the matter being contested is the existence or amount of a debt, the hearing official shall issue a decision upholding the Commission determination, unless the hearing official finds that the Commission determination was clearly erroneous.

(f) If the hearing official finds that the Commission's determination of the amount of the debt was clearly erroneous, he shall determine the amount owed by the employee, if any.

(g) If the matter being contested is the Commission's proposed offset schedule, the hearing official shall uphold that schedule unless the employee has demonstrated by clear and convincing evidence that the payments called for under that schedule would result in an extreme financial hardship for the employee.

(h) If the matter being contested is the credibility or veracity of the employee in connection with his request for a waiver, the hearing official shall make a determination as to the employee's credibility or veracity.

(i) If the hearing official finds that the payments called for under the Chief Financial Officer's proposed offset schedule will produce an extreme financial hardship for the employee, the hearing official shall establish an offset schedule that will result in the repayment of the debt in the shortest period of time which will not result in an extreme financial hardship for the employee.

(j) The hearing official shall issue a written opinion setting forth his decision and a statement of the reasons supporting it as soon as practicable, but not more than 60 days after the filing of the petition requesting the hearing, unless the hearing official has granted a delay in the proceedings at the request of the employee. The opinion shall contain his determinations as to the existence and amount of the debt, the origin of the debt, and, if a request for a waiver has been made, the employee's veracity or credibility.

(k) If the employee files a petition for a hearing in connection with a request for a waiver under a statute requiring a waiver and meets the time limits for filing material prior to the hearing, no deductions to effect the offset will be made until the employee has been provided a hearing and a final written decision has been issued.

§ 256.10 Representation.

An employee may represent himself or may be represented by another person, including an attorney, during any proceedings under this part.

§ 256.11 Applicable legal principles.

(a) The hearing official may not find that the Commission's determination of the existence or amount of the employee's debt was erroneous—

(1) On the basis of State or local statutes of limitations;

(2) On the basis that the employee is owed monies by the United States (other than regular salary) and that payment of that debt by the United States would eliminate or reduce the debt, unless the employee has, not later than 45 days after receipt of advance notice of the debt under § 256.4, submitted written confirmation by the

agency which is indebted to the employee that such money is owed and has assigned the payment of that money to the Commission; or

(3) On the basis of any factual or legal argument that was decided on the merits adversely to the employee in a court of competent jurisdiction.

(b) In determining whether the Chief Financial Officer's decision concerning the existence or amount of the employee's debt is clearly erroneous, the hearing official shall be bound by the relevant Federal statutes and regulations governing the program which gave rise to the debt, and general principles of the law of the United States, if relevant.

§256.12 Standards for determining extreme financial hardship.

(a) An offset will be considered to produce an extreme financial hardship for an employee if the offset prevents the employee from meeting the costs necessarily incurred for essential subsistence expenses of the employee and his spouse and dependents. Essential subsistence expenses consist of the costs incurred for medical care, food, housing, clothing, and transportation only.

(b) In determining whether an offset would prevent the employee from meeting the essential subsistence costs described in paragraph (a) of this section, the following matters shall be considered—

(1) The income from all sources of the employee and his spouse and dependents;

(2) The extent to which the assets of the employee and his spouse and dependents are available to pay the debt or the essential subsistence expenses;

(3) Whether the essential subsistence costs have been minimized to the greatest extent possible;

(4) The extent to which the employee and his spouse and dependents can borrow money to pay the debt or the essential subsistence expenses; and

(5) The extent to which the employee and his spouse and dependents have other exceptional expenses that should be taken into account, and whether these expenses have been minimized.

§256.13 Collection of debts on behalf of other agencies by offsetting the pay of a Commission employee.

(a) Upon completion of the procedures established by the creditor agency under 5 U.S.C. 5514, the creditor agency shall forward to the Commission a certified statement of the existence of the debt. This document shall include a statement that the employee owes the debt, the amount and basis of the debt, the date on which payment is due, the date on which the claim against the debtor accrued, if different from the payment due date, and a statement that agency regulations implementing 5 U.S.C. 5514 have been approved by the Office of Personnel Management.

(b) Unless the employee has consented to the salary offset in writing or signed a statement acknowledging receipt of the required procedures and the writing or statement is attached to the debt claim form, the creditor agency must also indicate the actions taken under section 5514(b) and give the dates the actions were taken.

(c) If, after the debt claim has been submitted by the creditor agency, the employee transfers to a position in another agency, the Commission will certify the total amount of the collection made on the debt. One copy of the certification will be furnished to the employee, and one copy will be furnished to the creditor agency, together with notice of the employee's transfer. The original of the debt claim form shall be inserted in the employee's official personnel folder, together with the certification of the amount which has been collected. Upon receiving the official personnel folder, it will be the responsibility of the new paying agency to resume the collection from the individual's current pay and notify the employee and the creditor agency of the resumption. In cases in which an employee transfers to the Commission while a debt is being collected from him by another Federal agency by offset, the Commission will resume the collection and notify the employee that it is doing so.

(d) For collections of debts by offset under this section, the Commission

will not repeat the procedures prescribed by 5 U.S.C. 5514 and agency regulations under section 5514.

(e) If the Commission receives an incomplete or improperly certified debt claim, it will return the claim to the creditor agency with a notice that procedures under 5 U.S.C. 5514 must be complied with and a complete debt claim must be submitted before any action will be taken to collect the debt by offset from the employee's current pay.

(f) If the Commission receives a complete debt claim, deductions shall be scheduled to begin on the next officially established pay interval, if possible. A copy of the debt claim form shall be given to the debtor, together with notice of the date deductions will commence.

(g) The Commission will not review the merits of the creditor agency's determination with respect to the amount or validity of the debt.

PART 257—ENFORCEMENT OF NONDISCRIMINATION ON THE BASIS OF HANDICAP IN PROGRAMS OR ACTIVITIES CONDUCTED BY PANAMA CANAL COMMISSION

Sec.

257.101 Purpose.
257.102 Application.
257.103 Definitions.
257.104—257.109 [Reserved]
257.110 Self-evaluation.
257.111 Notice.
257.112—257.129 [Reserved]
257.130 General prohibitions against discrimination.
257.131—257.139 [Reserved]
257.140 Employment.
257.141—257.148 [Reserved]
257.149 Program accessibility: Discrimination prohibited.
257.150 Program accessibility: Existing facilities.
257.151 Program accessibility: New construction and alterations.
257.152—257.159 [Reserved]
257.160 Communications.
257.161—257.169 [Reserved]
257.170 Compliance procedures.
257.171—257.999 [Reserved]

AUTHORITY: 29 U.S.C. 794.

SOURCE: 52 FR 26007, July 10, 1987, unless otherwise noted.

§ 257.101 Purpose.

The purpose of this part is to effectuate section 119 of the Rehabilitation, Comprehensive Services, and Developmental Disabilities Amendments of 1978, which amended section 504 of the Rehabilitation Act of 1973 to prohibit discrimination on the basis of handicap in programs or activities conducted by Executive agencies or the United States Postal Service.

§ 257.102 Application.

This part applies to all programs or activities conducted by the agency except for programs or activities conducted outside the United States which do not involve individuals with handicaps in the United States.

§ 257.103 Definitions.

For purposes of this part, the term—

Agency means the Panama Canal Commission.

Assistant Attorney General means the Assistant Attorney General, Civil Rights Division, United States Department of Justice.

Auxiliary aids means services or devices that enable persons with impaired sensory, manual, or speaking skills to have an equal opportunity to participate in, and enjoy the benefits of, programs or activities conducted by the agency. For example, auxiliary aids useful for persons with impaired vision include readers, materials in Braille, audio recordings, and other similar services and devices. Auxiliary aids useful for persons with impaired hearing include telephone handset amplifiers, telephones compatible with hearing aids, telecommunication devices for deaf persons (TDD's), interpreters, notetakers, written materials, and other similar services and devices.

Complete complaint means a written statement that contains the complainant's name and address and describes the agency's alleged discriminatory actions in sufficient detail to inform the agency of the nature and date of the alleged violation of section 504. It shall be signed by the complainant or by someone authorized to do so on his or her behalf. Complaints filed on behalf of classes or third parties shall describe or identify (by name, if possible) the alleged victims of discrimination.

Facility means all or any portion of buildings, structures, equipment, roads, walks, parking lots, rolling stock or other conveyances, or other real or personal property.

Individual with handicaps means any person who has a physical or mental impairment that substantially limits one or more major life activities, has a record of such an impairment, or is regarded as having such an impairment. As used in this definition, the phrase:

(1) *Physical or mental impairment* includes—

(i) Any physiological disorder or condition, cosmetic disfigurement, or anatomical loss affecting one or more of the following body systems: Neurological; musculoskeletal; special sense organs; respiratory, including speech organs; cardiovascular; reproductive; digestive; genitourinary; hemic and lymphatic; skin; and endocrine; or

(ii) Any mental or psychological disorder, such as mental retardation, organic brain syndrome, emotional or mental illness, and specific learning disabilities. The term *physical or mental impairment* includes but is not limited to, such diseases and conditions as orthopedic, visual, speech and hearing impairments, cerebral palsy, epilepsy, muscular dystrophy, multiple sclerosis, cancer, heart disease, diabetes, mental retardation, emotional illness, and drug addiction and alcoholism.

(2) *Major life activities* includes functions such as caring for oneself, performing manual tasks, walking, seeing, hearing, speaking, breathing, learning, and working.

(3) *Has a record of such an impairment* means has a history of, or has been misclassified as having, a mental or physical impairment that substantially limits one or more major life activities.

(4) *Is regarded as having an impairment* means—

(i) Has a physical or mental impairment that does not substantially limit major life activities but is treated by the agency as constituting such a limitation;

(ii) Has a physical or mental impairment that substantially limits major life activities only as a result of the attitudes of others toward such impairment; or

(iii) Has none of the impairments defined in paragraph (1) of this definition but is treated by the agency as having such an impairment.

Qualified individual with handicaps means—

(1) With respect to any covered agency program or activity under which a person is required to perform services or to achieve a level of accomplishment, an individual with handicaps who meets the essential eligibility requirements and who can achieve the purpose of the program or activity without modifications in the program or activity that the agency can demonstrate would result in a fundamental alteration in its nature;

(2) With respect to employment, an individual with handicaps who meets the definition of *qualified handicapped person* set forth in 29 CFR 1613.702(f), which is made applicable to this part by § 257.140; and

(3) With respect to any other covered program or activity, an individual with handicaps who meets the essential eligibility requirements for participation in, or receipt of benefits from, that program or activity.

Section 504 means section 504 of the Rehabilitation Act of 1973 (Pub. L. 93–112, 87 Stat. 394 (29 U.S.C. 794)), as amended by the Rehabilitation Act Amendments of 1974 (Pub. L. 93–516, 88 Stat. 1617); the Rehabilitation, Comprehensive Services, and Developmental Disabilities Amendments of 1978 (Pub. L. 95–602, 92 Stat. 2955); and the Rehabilitation Act Amendments of 1986 (Pub. L. 99–506, 100 Stat. 1810). As used in this part, section 504 applies only to programs or activities conducted by Executive agencies and not to federally assisted programs.

§§ 257.104—257.109 [Reserved]

§ 257.110 Self-evaluation.

(a) The agency shall, by July 11, 1988, evaluate its current policies and practices, and the effects thereof, that do not or may not meet the requirements of this part, and, to the extent modification of any such policies and practices is required, the agency shall proceed to make the necessary modifications.

(b) The agency shall provide an opportunity to interested persons, including individuals with handicaps, or organizations representing individuals with handicaps, to participate in the self-evaluation process by submitting comments (both oral and written).

(c) The agency shall, for at least three years following completion of the evaluation required under paragraph (a) of this section, maintain on file and make available for public inspection—

(1) A description of areas examined and any problems identified; and

(2) A description of any modifications made.

§ 257.111 Notice.

The agency shall make available to employees, applicants, participants, beneficiaries, and other interested persons such information regarding the provisions of this part and its applicability to the programs or activities conducted by the agency, and make such information available to them in such manner as the agency head finds necessary to apprise such persons of the protections against discrimination assured them by section 504 and this regulation.

§§ 257.112—257.129 [Reserved]

§ 257.130 General prohibitions against discrimination.

(a) No qualified individual with handicaps shall, on the basis of handicap, be excluded from participation in, be denied the benefits of, or otherwise be subjected to discrimination under any program or activity conducted by the offices of the agency located in the United States.

(b)(1) The agency, in providing any aid, benefit, or service may not, directly or through contractual, licensing, or other arrangements, on the basis of handicap—

(i) Deny a qualified individual with handicaps the opportunity to participate in or benefit from the aid, benefit or service;

(ii) Afford a qualified individual with handicaps an opportunity to participate in or benefit from the aid, benefit, or service that is not equal to that afforded others;

(iii) Provide a qualified individual with handicaps with an aid, benefit, or service that is not as effective in affording equal opportunity to obtain the same result, to gain the same benefit, or to reach the same level of achievement as that provided to others;

(iv) Provide different or separate aid, benefits, or services to individuals with handicaps or to any class of individuals with handicaps than is provided to others unless such action is necessary to provide qualified individuals with handicaps with aid, benefits, or services that are as effective as those provided to others; or

(v) Otherwise limit a qualified individual with handicaps in the enjoyment of any right, privilege, advantage, or opportunity enjoyed by others receiving the aid, benefit, or service.

(2) The agency may not deny a qualified individual with handicaps the opportunity to participate in programs or activities that are not separate or different, despite the existence of permissible separate or different programs or activities.

(3) The agency may not, directly or through contractual or other arrangements, utilize criteria or methods of administration the purpose or effect of which would—

(i) Subject qualified individuals with handicaps to discrimination on the basis of handicap; or

(ii) Defeat or substantially impair accomplishment of the objectives of a program or activity with respect to individuals with handicaps.

(4) The agency may not, in determining the site or location of a facility, make selections the purpose or effect of which would—

(i) Exclude individuals with handicaps from, deny them the benefits of, or otherwise subject them to discrimination under any program or activity conducted by the agency; or

(ii) Defeat or substantially impair the accomplishment of the objectives of a program or activity with respect to individuals with handicaps.

(5) The agency, in the selection of procurement contractors, may not use criteria that subject qualified individuals with handicaps to discrimination on the basis of handicap.

(c) The exclusion of nonhandicapped persons from the benefits of a program limited by Federal statute or Executive order to individuals with handicaps or the exclusion of a specific class of individuals with handicaps from a program limited by Federal statute or Executive order to a different class of individuals with handicaps is not prohibited by this part.

(d) The agency shall administer programs and activities in the most integrated setting appropriate to the needs of qualified individuals with handicaps.

§§ 257.131—257.139 [Reserved]

§ 257.140 Employment.

No qualified individual with handicaps shall, on the basis of handicap, be subjected to discrimination in employment under any program or activity conducted by the agency. The definitions, requirements, and procedures of section 501 of the Rehabilitation Act of 1973 (29 U.S.C. 791), as established by the Equal Employment Opportunity Commission in 29 CFR Part 1613, shall apply to employment in federally conducted programs or activities.

§§ 257.141—257.148 [Reserved]

§ 257.149 Program accessibility: Discrimination prohibited.

Except as otherwise provided in § 257.150 no qualified individual with handicaps shall, because the agency's facilities are inaccessible to or unusable by individuals with handicaps, be denied the benefits of, be excluded from participation in, or otherwise be subjected to discrimination under any program or activity conducted by the agency.

§ 257.150 Program accessibility: Existing facilities.

(a) *General.* The agency shall operate each program or activity so that the program or activity, when viewed in its entirety, is readily accessible to and usable by individuals with handicaps. This paragraph does not—

(1) Necessarily require the agency to make each of its existing facilities accessible to and usable by individuals with handicaps; or

(2) Require the agency to take any action that it can demonstrate would result in a fundamental alteration in the nature of a program or activity or in undue financial and administrative burdens. In those circumstances where agency personnel believe that the proposed action would fundamentally alter the program or activity or would result in undue financial and administrative burdens, the agency has the burden of proving that compliance with § 257.150(a) would result in such alteration or burdens. The decision that compliance would result in such alteration or burdens must be made by the agency head or his designee after considering all agency resources available for use in the funding and operation of the conducted program or activity, and must be accompanied by a written statement of the reasons for reaching that conclusion. If an action would result in such an alteration or such burdens, the agency shall take any other action that would not result in such an alteration or such burdens but would nevertheless ensure that individuals with handicaps receive the benefits and services of the program or activity.

(b) *Methods*—(1) *General.* The agency may comply with the requirements of this section through such means as redesign of equipment, reassignment of services to accessible buildings, assignments of aides to beneficiaries, home visits, delivery of services at alternate accessible sites, alteration of existing facilities and construction of new facilities, use of accessible rolling stock, or any other methods that result in making its programs or activities readily accessible to and usable by individuals with handicaps. The agency is not required to make structural changes in existing facilities where other methods are effective in achieving compliance with this section. The agency, in making alterations to existing buildings, shall meet accessibility requirements to the extent compelled by the Architectural Barriers Act of 1968, as amended (42 U.S.C. 4151 through 4157), and any regulations implementing it. In choosing among available methods for meeting the requirements of this section, the agency shall give priority to those methods that offer programs and activities to qualified individuals with handicaps in the most integrated setting appropriate.

(c) *Time period for compliance.* The agency shall comply with the obligations established under this section by October 8, 1987, except that where structural changes in facilities are undertaken, such changes shall be made by July 10, 1990, but in any event as expeditiously as possible.

(d) *Transition plan.* In the event that structural changes to facilities will be undertaken to achieve program accessibility, the agency shall develop, by January 11, 1988, a transition plan setting forth the steps necessary to complete such changes. The agency shall provide an opportunity to interested persons, including individuals with handicaps or organizations representing individuals with handicaps, to participate in the development of the transition plan by submitting comments (both oral and written). A copy of the transition plan shall be made available for public inspection. The plan shall, at a minimum—

(1) Identify physical obstacles in the agency's facilities that limit the accessibility of its programs or activities to individuals with handicaps;

(2) Describe in detail the methods that will be used to make the facilities accessible;

(3) Specify the schedule for taking the steps necessary to achieve compliance with this section, and if the time period of the transition plan is longer than one year, identify steps that will be taken during each year of the transition period;

(4) Indicate the official responsible for implementation of the plan.

§ 257.151 Program accessibility: New construction and alterations.

Each building or part of a building that is constructed or altered by, on behalf of, or for the use of the agency shall be designed, constructed, or altered so as to be readily accessible to and usable by individuals with handicaps. The definitions, requirements, and standards of the Architectural Barriers Act (42 U.S.C. 4151 through 4157), as established in 41 CFR 101–19.600 to 101–19.607, apply to buildings covered by this section.

§§ 257.152—257.159 [Reserved]

§ 257.160 Communications.

(a) The agency shall take appropriate steps to ensure effective communication with applicants, participants, personnel of other Federal entities, and members of the public.

(1) The agency shall furnish appropriate auxiliary aids where necessary to afford an individual with handicaps an equal opportunity to participate in, and enjoy the benefits of, a program or activity conducted by the agency.

(i) In determining what type of auxiliary aid is necessary, the agency shall give primary consideration to the requests of the individual with handicaps.

(ii) The agency need not provide individually prescribed devices, readers for personal use or study, or other devices of a personal nature.

(2) Where the agency communicates with applicants and beneficiaries by telephone, telecommunication devices for deaf persons (TDD's) or equally effective telecommunication systems shall be used.

(b) The agency shall ensure that interested persons, including persons with impaired vision or hearing, can obtain information as to the existence and location of accessible services, activities, and facilities.

(c) The agency shall provide signs at a primary entrance to each of its inaccessible facilities, directing users to a location at which they can obtain information about accessible facilities. The international symbol for accessibility shall be used at each primary entrance of an accessible facility.

(d) This section does not require the agency to take any action that it can demonstrate would result in a fundamental alteration in the nature of a program or activity or in undue financial and administrative burdens. In those circumstances where agency personnel believe that the proposed action would fundamentally alter the program or activity or would result in undue financial and administrative burdens, the agency has the burden of proving that compliance with § 257.160 would result in such alteration or burdens. The decision that compliance would result in such alteration or burdens must be

made by the agency head or his designee after considering all agency resources available for use in the funding and operation of the conducted program or activity, and must be accompanied by a written statement of the reasons for reaching that conclusion. If an action required to comply with this section would result in such an alteration or such burdens, the agency shall take any other action that would not result in such an alteration or such burdens but would nevertheless ensure that, to the maximum extent possible, individuals with handicaps receive the benefits and services of the program or activity.

§§ 257.161—257.169 [Reserved]

§ 257.170 Compliance procedures.

(a) Except as provided in paragraph (b) of this section, this section applies to all allegations of discrimination on the basis of handicap in programs or activities conducted by the agency.

(b) The agency shall process complaints alleging violations of section 504 with respect to employment according to the procedures established by the Equal Employment Opportunity Commission in 29 CFR Part 1613 pursuant to section 501 of the Rehabilitation Act of 1973 (29 U.S.C. 791).

(c) Responsibility for implementation and operation of this section shall be vested in the Director of Equal Opportunity.

(d) The agency shall accept and investigate all complete complaints for which it has jurisdiction. All complete complaints must be filed within 180 days of the alleged act of discrimination. The agency may extend this time period for good cause.

(e) If the agency receives a complaint over which it does not have jurisdiction, it shall promptly notify the complainant and shall make reasonable efforts to refer the complaint to the appropriate government entity.

(f) The agency shall notify the Architectural and Transportation Barriers Compliance Board upon receipt of any complaint alleging that a building or facility that is subject to the Architectural Barriers Act of 1968, as amended (42 U.S.C. 4151 through 4157), is not readily accessible to and usable by individuals with handicaps.

(g) Within 180 days of the receipt of a complete complaint for which it has jurisdiction, the agency shall notify the complainant of the results of the investigation in a letter containing—

(1) Findings of fact and conclusions of law;

(2) A description of a remedy for each violation found; and

(3) A notice of the right to appeal.

(h) Appeals of the findings of fact and conclusions of law or remedies must be filed by the complainant within 90 days of receipt by the complainant of decision required by § 257.170(g). The agency may extend this time for good cause.

(i) Timely appeals shall be accepted and processed by Administrator of the Panama Canal Commission.

(j) The Administrator shall notify the complainant of the results of the appeal within 60 days of the receipt of the request. If the Administrator determines that it needs additional information from the complainant, he shall have 60 days from the date it receives the additional information to make its determination on the appeal.

(k) The time limits cited in paragraphs (g) and (j) of this section may be extended with the permission of the Assistant Attorney General.

(l) The agency may delegate its authority for conducting complaint investigations to other Federal agencies, except that the authority for making the final determination may not be delegated.

§§ 257.171—257.999 [Reserved]

FINDING AIDS

A list of CFR titles, subtitles, chapters, subchapters and parts, and an alphabetical list of agencies publishing in the CFR are included in the CFR Index and Finding Aids volume to the Code of Federal Regulations which is published separately and revised annually.

Material Approved for Incorporation by Reference
Table of CFR Titles and Chapters
Alphabetical List of Agencies Appearing in the CFR
Redesignation Tables
List of CFR Sections Affected

Material Approved for Incorporation by Reference

(Revised as of July 1, 1997)

The Director of the Federal Register has approved under 5 U.S.C. 552(a) and 1 CFR Part 51 the incorporation by reference of the following publications. This list contains only those incorporations by reference effective as of the revision date of this volume. Incorporations by reference found within a regulation are effective upon the effective date of that regulation. For more information on incorporation by reference, see the preliminary pages of this volume.

35 CFR Chapter I
PANAMA CANAL

	35 CFR
International Maritime Organization	
Publications Section, 4 Albert Embankment, London, SEI 75R, England	
Code for the Construction and Equipment of Ships Carrying Dangerous Chemicals in Bulk (1980).	113.25
Code for the Construction and Equipment of Ships Carrying Liquefied Gases in Bulk (1983).	113.25
Code for Existing Ships Carrying Liquefied Gases in Bulk (1976)	113.25
Code of Safe Practices for Solid Bulk Cargoes (1983)	113.25
International Code for the Construction and Equipment of Ships Carrying Dangerous Chemicals in Bulk (1983).	113.25
International Code for the Construction and Equipment of Ships Carrying Liquefied Gases in Bulk (1978).	113.25
International Convention for the Prevention of Pollution from Ships 1973, and Protocol of 1978, relating thereto.	113.25
International Convention for the Safety of Life at Sea, 1974 and Protocol of 1978, relating thereto.	113.25
International Convention on Standards of Training, Certification and Watchstanding for Seafarers, 1978.	107.01
International Maritime Dangerous Goods Code (1983)	113.25

Table of CFR Titles and Chapters

(Revised as of June 20, 1997)

Title 1—General Provisions

I Administrative Committee of the Federal Register (Parts 1—49)
II Office of the Federal Register (Parts 50—299)
IV Miscellaneous Agencies (Parts 400—500)

Title 2—[Reserved]

Title 3—The President

I Executive Office of the President (Parts 100—199)

Title 4—Accounts

I General Accounting Office (Parts 1—99)
II Federal Claims Collection Standards (General Accounting Office—Department of Justice) (Parts 100—299)

Title 5—Administrative Personnel

I Office of Personnel Management (Parts 1—1199)
II Merit Systems Protection Board (Parts 1200—1299)
III Office of Management and Budget (Parts 1300—1399)
IV Advisory Committee on Federal Pay (Parts 1400—1499)
V The International Organizations Employees Loyalty Board (Parts 1500—1599)
VI Federal Retirement Thrift Investment Board (Parts 1600—1699)
VII Advisory Commission on Intergovernmental Relations (Parts 1700—1799)
VIII Office of Special Counsel (Parts 1800—1899)
IX Appalachian Regional Commission (Parts 1900—1999)
XI Armed Forces Retirement Home (Part 2100)
XIV Federal Labor Relations Authority, General Counsel of the Federal Labor Relations Authority and Federal Service Impasses Panel (Parts 2400—2499)
XV Office of Administration, Executive Office of the President (Parts 2500—2599)
XVI Office of Government Ethics (Parts 2600—2699)
XXI Department of the Treasury (Parts 3100—3199)
XXII Federal Deposit Insurance Corporation (Part 3201)
XXIII Department of Energy (Part 3301)

Title 5—Administrative Personnel—Continued

Chap.	
XXIV	Federal Energy Regulatory Commission (Part 3401)
XXVI	Department of Defense (Part 3601)
XXVIII	Department of Justice (Part 3801)
XXIX	Federal Communications Commission (Parts 3900—3999)
XXX	Farm Credit System Insurance Corporation (Parts 4000—4099)
XXXI	Farm Credit Administration (Parts 4100—4199)
XXXIII	Overseas Private Investment Corporation (Part 4301)
XXXV	Office of Personnel Management (Part 4501)
XL	Interstate Commerce Commission (Part 5001)
XLI	Commodity Futures Trading Commission (Part 5101)
XLII	Department of Labor (Part 5201)
XLIII	National Science Foundation (Part 5301)
XLV	Department of Health and Human Services (Part 5501)
XLVI	Postal Rate Commission (Part 5601)
XLVII	Federal Trade Commission (Part 5701)
XLVIII	Nuclear Regulatory Commission (Part 5801)
L	Department of Transportation (Part 6001)
LII	Export-Import Bank of the United States (Part 6201)
LIII	Department of Education (Parts 6300—6399)
LIV	Environmental Protection Agency (Part 6401)
LVII	General Services Administration (Part 6701)
LVIII	Board of Governors of the Federal Reserve System (Part 6801)
LIX	National Aeronautics and Space Administration (Part 6901)
LX	United States Postal Service (Part 7001)
LXI	National Labor Relations Board (Part 7101)
LXII	Equal Employment Opportunity Commission (Part 7201)
LXIII	Inter-American Foundation (Part 7301)
LXV	Department of Housing and Urban Development (Part 7501)
LXVI	National Archives and Records Administration (Part 7601)
LXIX	Tennessee Valley Authority (Part 7901)
LXXI	Consumer Product Safety Commission (Part 8101)
LXXIV	Federal Mine Safety and Health Review Commission (Part 8401)
LXXVI	Federal Retirement Thrift Investment Board (Part 8601)
LXXVII	Office of Management and Budget (Part 8701)

Title 6—[Reserved]

Title 7—Agriculture

SUBTITLE A—Office of the Secretary of Agriculture (Parts 0—26)

SUBTITLE B—Regulations of the Department of Agriculture

I Agricultural Marketing Service (Standards, Inspections, Marketing Practices), Department of Agriculture (Parts 27—209)

II Food and Consumer Service, Department of Agriculture (Parts 210—299)

Title 7—Agriculture—Continued

Chap.	
III	Animal and Plant Health Inspection Service, Department of Agriculture (Parts 300—399)
IV	Federal Crop Insurance Corporation, Department of Agriculture (Parts 400—499)
V	Agricultural Research Service, Department of Agriculture (Parts 500—599)
VI	Natural Resources Conservation Service, Department of Agriculture (Parts 600—699)
VII	Farm Service Agency, Department of Agriculture (Parts 700—799)
VIII	Grain Inspection, Packers and Stockyards Administration (Federal Grain Inspection Service), Department of Agriculture (Parts 800—899)
IX	Agricultural Marketing Service (Marketing Agreements and Orders; Fruits, Vegetables, Nuts), Department of Agriculture (Parts 900—999)
X	Agricultural Marketing Service (Marketing Agreements and Orders; Milk), Department of Agriculture (Parts 1000—1199)
XI	Agricultural Marketing Service (Marketing Agreements and Orders; Miscellaneous Commodities), Department of Agriculture (Parts 1200—1299)
XIII	Northeast Dairy Compact Commission (Parts 1300—1399)
XIV	Commodity Credit Corporation, Department of Agriculture (Parts 1400—1499)
XV	Foreign Agricultural Service, Department of Agriculture (Parts 1500—1599)
XVI	Rural Telephone Bank, Department of Agriculture (Parts 1600—1699)
XVII	Rural Utilities Service, Department of Agriculture (Parts 1700—1799)
XVIII	Rural Housing Service, Rural Business-Cooperative Service, Rural Utilities Service, and Farm Service Agency, Department of Agriculture (Parts 1800—2099)
XXVI	Office of Inspector General, Department of Agriculture (Parts 2600—2699)
XXVII	Office of Information Resources Management, Department of Agriculture (Parts 2700—2799)
XXVIII	Office of Operations, Department of Agriculture (Parts 2800—2899)
XXIX	Office of Energy, Department of Agriculture (Parts 2900—2999)
XXX	Office of Finance and Management, Department of Agriculture (Parts 3000—3099)
XXXI	Office of Environmental Quality, Department of Agriculture (Parts 3100—3199)
XXXII	[Reserved]
XXXIII	Office of Transportation, Department of Agriculture (Parts 3300—3399)
XXXIV	Cooperative State Research, Education, and Extension Service, Department of Agriculture (Parts 3400—3499)

Title 7—Agriculture—Continued

Chap.

XXXV Rural Housing Service, Department of Agriculture (Parts 3500—3599)

XXXVI National Agricultural Statistics Service, Department of Agriculture (Parts 3600—3699)

XXXVII Economic Research Service, Department of Agriculture (Parts 3700—3799)

XXXVIII World Agricultural Outlook Board, Department of Agriculture (Parts 3800—3899)

XLI [Reserved]

XLII Rural Business-Cooperative Service and Rural Utilities Service, Department of Agriculture (Parts 4200—4299)

Title 8—Aliens and Nationality

I Immigration and Naturalization Service, Department of Justice (Parts 1—499)

Title 9—Animals and Animal Products

I Animal and Plant Health Inspection Service, Department of Agriculture (Parts 1—199)

II Grain Inspection, Packers and Stockyards Administration (Packers and Stockyards Programs), Department of Agriculture (Parts 200—299)

III Food Safety and Inspection Service, Meat and Poultry Inspection, Department of Agriculture (Parts 300—599)

Title 10—Energy

I Nuclear Regulatory Commission (Parts 0—199)

II Department of Energy (Parts 200—699)

III Department of Energy (Parts 700—999)

X Department of Energy (General Provisions) (Parts 1000—1099)

XI United States Enrichment Corporation (Parts 1100—1199)

XV Office of the Federal Inspector for the Alaska Natural Gas Transportation System (Parts 1500—1599)

XVII Defense Nuclear Facilities Safety Board (Parts 1700—1799)

Title 11—Federal Elections

I Federal Election Commission (Parts 1—9099)

Title 12—Banks and Banking

I Comptroller of the Currency, Department of the Treasury (Parts 1—199)

II Federal Reserve System (Parts 200—299)

III Federal Deposit Insurance Corporation (Parts 300—399)

IV Export-Import Bank of the United States (Parts 400—499)

Title 12—Banks and Banking—Continued

Chap.

V Office of Thrift Supervision, Department of the Treasury (Parts 500—599)

VI Farm Credit Administration (Parts 600—699)

VII National Credit Union Administration (Parts 700—799)

VIII Federal Financing Bank (Parts 800—899)

IX Federal Housing Finance Board (Parts 900—999)

XI Federal Financial Institutions Examination Council (Parts 1100—1199)

XIV Farm Credit System Insurance Corporation (Parts 1400—1499)

XV Thrift Depositor Protection Oversight Board (Parts 1500—1599)

XVII Office of Federal Housing Enterprise Oversight, Department of Housing and Urban Development (Parts 1700-1799)

XVIII Community Development Financial Institutions Fund, Department of the Treasury (Parts 1800—1899)

Title 13—Business Credit and Assistance

I Small Business Administration (Parts 1—199)

III Economic Development Administration, Department of Commerce (Parts 300—399)

Title 14—Aeronautics and Space

I Federal Aviation Administration, Department of Transportation (Parts 1—199)

II Office of the Secretary, Department of Transportation (Aviation Proceedings) (Parts 200—399)

III Commercial Space Transportation, Federal Aviation Administration, Department of Transportation (Parts 400—499)

V National Aeronautics and Space Administration (Parts 1200—1299)

Title 15—Commerce and Foreign Trade

SUBTITLE A—Office of the Secretary of Commerce (Parts 0—29)

SUBTITLE B—Regulations Relating to Commerce and Foreign Trade

I Bureau of the Census, Department of Commerce (Parts 30—199)

II National Institute of Standards and Technology, Department of Commerce (Parts 200—299)

III International Trade Administration, Department of Commerce (Parts 300—399)

IV Foreign-Trade Zones Board, Department of Commerce (Parts 400—499)

VII Bureau of Export Administration, Department of Commerce (Parts 700—799)

VIII Bureau of Economic Analysis, Department of Commerce (Parts 800—899)

IX National Oceanic and Atmospheric Administration, Department of Commerce (Parts 900—999)

Title 15—Commerce and Foreign Trade—Continued

Chap.

XI Technology Administration, Department of Commerce (Parts 1100—1199)

XIII East-West Foreign Trade Board (Parts 1300—1399)

XIV Minority Business Development Agency (Parts 1400—1499)

SUBTITLE C—Regulations Relating to Foreign Trade Agreements

XX Office of the United States Trade Representative (Parts 2000—2099)

SUBTITLE D—Regulations Relating to Telecommunications and Information

XXIII National Telecommunications and Information Administration, Department of Commerce (Parts 2300—2399)

Title 16—Commercial Practices

I Federal Trade Commission (Parts 0—999)

II Consumer Product Safety Commission (Parts 1000—1799)

Title 17—Commodity and Securities Exchanges

I Commodity Futures Trading Commission (Parts 1—199)

II Securities and Exchange Commission (Parts 200—399)

IV Department of the Treasury (Parts 400—499)

Title 18—Conservation of Power and Water Resources

I Federal Energy Regulatory Commission, Department of Energy (Parts 1—399)

III Delaware River Basin Commission (Parts 400—499)

VI Water Resources Council (Parts 700—799)

VIII Susquehanna River Basin Commission (Parts 800—899)

XIII Tennessee Valley Authority (Parts 1300—1399)

Title 19—Customs Duties

I United States Customs Service, Department of the Treasury (Parts 1—199)

II United States International Trade Commission (Parts 200—299)

III International Trade Administration, Department of Commerce (Parts 300—399)

Title 20—Employees' Benefits

I Office of Workers' Compensation Programs, Department of Labor (Parts 1—199)

II Railroad Retirement Board (Parts 200—399)

III Social Security Administration (Parts 400—499)

IV Employees' Compensation Appeals Board, Department of Labor (Parts 500—599)

V Employment and Training Administration, Department of Labor (Parts 600—699)

Title 20—Employees' Benefits—Continued

Chap.

VI Employment Standards Administration, Department of Labor (Parts 700—799)

VII Benefits Review Board, Department of Labor (Parts 800—899)

VIII Joint Board for the Enrollment of Actuaries (Parts 900—999)

IX Office of the Assistant Secretary for Veterans' Employment and Training, Department of Labor (Parts 1000—1099)

Title 21—Food and Drugs

I Food and Drug Administration, Department of Health and Human Services (Parts 1—1299)

II Drug Enforcement Administration, Department of Justice (Parts 1300—1399)

III Office of National Drug Control Policy (Parts 1400—1499)

Title 22—Foreign Relations

I Department of State (Parts 1—199)

II Agency for International Development, International Development Cooperation Agency (Parts 200—299)

III Peace Corps (Parts 300—399)

IV International Joint Commission, United States and Canada (Parts 400—499)

V United States Information Agency (Parts 500—599)

VI United States Arms Control and Disarmament Agency (Parts 600—699)

VII Overseas Private Investment Corporation, International Development Cooperation Agency (Parts 700—799)

IX Foreign Service Grievance Board Regulations (Parts 900—999)

X Inter-American Foundation (Parts 1000—1099)

XI International Boundary and Water Commission, United States and Mexico, United States Section (Parts 1100—1199)

XII United States International Development Cooperation Agency (Parts 1200—1299)

XIII Board for International Broadcasting (Parts 1300—1399)

XIV Foreign Service Labor Relations Board; Federal Labor Relations Authority; General Counsel of the Federal Labor Relations Authority; and the Foreign Service Impasse Disputes Panel (Parts 1400—1499)

XV African Development Foundation (Parts 1500—1599)

XVI Japan-United States Friendship Commission (Parts 1600—1699)

XVII United States Institute of Peace (Parts 1700—1799)

Title 23—Highways

I Federal Highway Administration, Department of Transportation (Parts 1—999)

II National Highway Traffic Safety Administration and Federal Highway Administration, Department of Transportation (Parts 1200—1299)

Title 23—Highways—Continued

Chap.

III National Highway Traffic Safety Administration, Department of Transportation (Parts 1300—1399)

Title 24—Housing and Urban Development

SUBTITLE A—Office of the Secretary, Department of Housing and Urban Development (Parts 0—99)

SUBTITLE B—Regulations Relating to Housing and Urban Development

I Office of Assistant Secretary for Equal Opportunity, Department of Housing and Urban Development (Parts 100—199)

II Office of Assistant Secretary for Housing-Federal Housing Commissioner, Department of Housing and Urban Development (Parts 200—299)

III Government National Mortgage Association, Department of Housing and Urban Development (Parts 300—399)

V Office of Assistant Secretary for Community Planning and Development, Department of Housing and Urban Development (Parts 500—599)

VI Office of Assistant Secretary for Community Planning and Development, Department of Housing and Urban Development (Parts 600—699) [Reserved]

VII Office of the Secretary, Department of Housing and Urban Development (Housing Assistance Programs and Public and Indian Housing Programs) (Parts 700—799)

VIII Office of the Assistant Secretary for Housing—Federal Housing Commissioner, Department of Housing and Urban Development (Section 8 Housing Assistance Programs and Section 202 Direct Loan Program) (Parts 800—899)

IX Office of Assistant Secretary for Public and Indian Housing, Department of Housing and Urban Development (Parts 900—999)

X Office of Assistant Secretary for Housing—Federal Housing Commissioner, Department of Housing and Urban Development (Interstate Land Sales Registration Program) (Parts 1700—1799)

XII Office of Inspector General, Department of Housing and Urban Development (Parts 2000—2099)

XX Office of Assistant Secretary for Housing—Federal Housing Commissioner, Department of Housing and Urban Development (Parts 3200—3899)

XXV Neighborhood Reinvestment Corporation (Parts 4100—4199)

Title 25—Indians

I Bureau of Indian Affairs, Department of the Interior (Parts 1—299)

II Indian Arts and Crafts Board, Department of the Interior (Parts 300—399)

III National Indian Gaming Commission, Department of the Interior (Parts 500—599)

IV Office of Navajo and Hopi Indian Relocation (Parts 700—799)

Title 25—Indians—Continued

Chap.

V Bureau of Indian Affairs, Department of the Interior, and Indian Health Service, Department of Health and Human Services (Part 900)

VI Office of the Assistant Secretary-Indian Affairs, Department of the Interior (Part 1001)

VII Office of the Special Trustee for American Indians, Department of the Interior (Part 1200)

Title 26—Internal Revenue

I Internal Revenue Service, Department of the Treasury (Parts 1—799)

Title 27—Alcohol, Tobacco Products and Firearms

I Bureau of Alcohol, Tobacco and Firearms, Department of the Treasury (Parts 1—299)

Title 28—Judicial Administration

I Department of Justice (Parts 0—199)

III Federal Prison Industries, Inc., Department of Justice (Parts 300—399)

V Bureau of Prisons, Department of Justice (Parts 500—599)

VI Offices of Independent Counsel, Department of Justice (Parts 600—699)

VII Office of Independent Counsel (Parts 700—799)

Title 29—Labor

SUBTITLE A—Office of the Secretary of Labor (Parts 0—99)

SUBTITLE B—Regulations Relating to Labor

I National Labor Relations Board (Parts 100—199)

II Office of Labor-Management Standards, Department of Labor (Parts 200—299)

III National Railroad Adjustment Board (Parts 300—399)

IV Office of Labor-Management Standards, Department of Labor (Parts 400—499)

V Wage and Hour Division, Department of Labor (Parts 500—899)

IX Construction Industry Collective Bargaining Commission (Parts 900—999)

X National Mediation Board (Parts 1200—1299)

XII Federal Mediation and Conciliation Service (Parts 1400—1499)

XIV Equal Employment Opportunity Commission (Parts 1600—1699)

XVII Occupational Safety and Health Administration, Department of Labor (Parts 1900—1999)

XX Occupational Safety and Health Review Commission (Parts 2200—2499)

XXV Pension and Welfare Benefits Administration, Department of Labor (Parts 2500—2599)

Title 29—Labor—Continued

Chap.

XXVII Federal Mine Safety and Health Review Commission (Parts 2700—2799)

XL Pension Benefit Guaranty Corporation (Parts 4000—4999)

Title 30—Mineral Resources

I Mine Safety and Health Administration, Department of Labor (Parts 1—199)

II Minerals Management Service, Department of the Interior (Parts 200—299)

III Board of Surface Mining and Reclamation Appeals, Department of the Interior (Parts 300—399)

IV Geological Survey, Department of the Interior (Parts 400—499)

VI Bureau of Mines, Department of the Interior (Parts 600—699)

VII Office of Surface Mining Reclamation and Enforcement, Department of the Interior (Parts 700—999)

Title 31—Money and Finance: Treasury

SUBTITLE A—Office of the Secretary of the Treasury (Parts 0—50)

SUBTITLE B—Regulations Relating to Money and Finance

I Monetary Offices, Department of the Treasury (Parts 51—199)

II Fiscal Service, Department of the Treasury (Parts 200—399)

IV Secret Service, Department of the Treasury (Parts 400—499)

V Office of Foreign Assets Control, Department of the Treasury (Parts 500—599)

VI Bureau of Engraving and Printing, Department of the Treasury (Parts 600—699)

VII Federal Law Enforcement Training Center, Department of the Treasury (Parts 700—799)

VIII Office of International Investment, Department of the Treasury (Parts 800—899)

Title 32—National Defense

SUBTITLE A—Department of Defense

I Office of the Secretary of Defense (Parts 1—399)

V Department of the Army (Parts 400—699)

VI Department of the Navy (Parts 700—799)

VII Department of the Air Force (Parts 800—1099)

SUBTITLE B—Other Regulations Relating to National Defense

XII Defense Logistics Agency (Parts 1200—1299)

XVI Selective Service System (Parts 1600—1699)

XIX Central Intelligence Agency (Parts 1900—1999)

XX Information Security Oversight Office, National Archives and Records Administration (Parts 2000—2099)

XXI National Security Council (Parts 2100—2199)

Title 32—National Defense—Continued

Chap.

XXIV Office of Science and Technology Policy (Parts 2400—2499)

XXVII Office for Micronesian Status Negotiations (Parts 2700—2799)

XXVIII Office of the Vice President of the United States (Parts 2800—2899)

XXIX Presidential Commission on the Assignment of Women in the Armed Forces (Part 2900)

Title 33—Navigation and Navigable Waters

I Coast Guard, Department of Transportation (Parts 1—199)

II Corps of Engineers, Department of the Army (Parts 200—399)

IV Saint Lawrence Seaway Development Corporation, Department of Transportation (Parts 400—499)

Title 34—Education

SUBTITLE A—Office of the Secretary, Department of Education (Parts 1—99)

SUBTITLE B—Regulations of the Offices of the Department of Education

I Office for Civil Rights, Department of Education (Parts 100—199)

II Office of Elementary and Secondary Education, Department of Education (Parts 200—299)

III Office of Special Education and Rehabilitative Services, Department of Education (Parts 300—399)

IV Office of Vocational and Adult Education, Department of Education (Parts 400—499)

V Office of Bilingual Education and Minority Languages Affairs, Department of Education (Parts 500—599)

VI Office of Postsecondary Education, Department of Education (Parts 600—699)

VII Office of Educational Research and Improvement, Department of Education (Parts 700—799)

XI National Institute for Literacy (Parts 1100-1199)

SUBTITLE C—Regulations Relating to Education

XII National Council on Disability (Parts 1200—1299)

Title 35—Panama Canal

I Panama Canal Regulations (Parts 1—299)

Title 36—Parks, Forests, and Public Property

I National Park Service, Department of the Interior (Parts 1—199)

II Forest Service, Department of Agriculture (Parts 200—299)

III Corps of Engineers, Department of the Army (Parts 300—399)

IV American Battle Monuments Commission (Parts 400—499)

V Smithsonian Institution (Parts 500—599)

VII Library of Congress (Parts 700—799)

Title 36—Parks, Forests, and Public Property—Continued

Chap.

VIII Advisory Council on Historic Preservation (Parts 800—899)

IX Pennsylvania Avenue Development Corporation (Parts 900—999)

XI Architectural and Transportation Barriers Compliance Board (Parts 1100—1199)

XII National Archives and Records Administration (Parts 1200—1299)

XIV Assassination Records Review Board (Parts 1400-1499)

Title 37—Patents, Trademarks, and Copyrights

I Patent and Trademark Office, Department of Commerce (Parts 1—199)

II Copyright Office, Library of Congress (Parts 200—299)

IV Assistant Secretary for Technology Policy, Department of Commerce (Parts 400—499)

V Under Secretary for Technology, Department of Commerce (Parts 500—599)

Title 38—Pensions, Bonuses, and Veterans' Relief

I Department of Veterans Affairs (Parts 0—99)

Title 39—Postal Service

I United States Postal Service (Parts 1—999)

III Postal Rate Commission (Parts 3000—3099)

Title 40—Protection of Environment

I Environmental Protection Agency (Parts 1—799)

V Council on Environmental Quality (Parts 1500—1599)

Title 41—Public Contracts and Property Management

SUBTITLE B—Other Provisions Relating to Public Contracts

50 Public Contracts, Department of Labor (Parts 50–1—50–999)

51 Committee for Purchase From People Who Are Blind or Severely Disabled (Parts 51–1—51–99)

60 Office of Federal Contract Compliance Programs, Equal Employment Opportunity, Department of Labor (Parts 60–1—60–999)

61 Office of the Assistant Secretary for Veterans Employment and Training, Department of Labor (Parts 61–1—61–999)

SUBTITLE C—Federal Property Management Regulations System

101 Federal Property Management Regulations (Parts 101–1—101–99)

105 General Services Administration (Parts 105–1—105–999)

109 Department of Energy Property Management Regulations (Parts 109–1—109–99)

114 Department of the Interior (Parts 114–1—114–99)

115 Environmental Protection Agency (Parts 115–1—115–99)

128 Department of Justice (Parts 128–1—128–99)

Title 41—Public Contracts and Property Management—Continued

Chap.

SUBTITLE D—Other Provisions Relating to Property Management [Reserved]

SUBTITLE E—Federal Information Resources Management Regulations System

201 Federal Information Resources Management Regulation (Parts 201–1—201–99) [Reserved]

SUBTITLE F—Federal Travel Regulation System

301 Travel Allowances (Parts 301–1—301–99)

302 Relocation Allowances (Parts 302–1—302–99)

303 Payment of Expenses Connected with the Death of Certain Employees (Parts 303–1—303–2)

304 Payment from a Non-Federal Source for Travel Expenses (Parts 304–1—304–99)

Title 42—Public Health

I Public Health Service, Department of Health and Human Services (Parts 1—199)

IV Health Care Financing Administration, Department of Health and Human Services (Parts 400—499)

V Office of Inspector General-Health Care, Department of Health and Human Services (Parts 1000—1999)

Title 43—Public Lands: Interior

SUBTITLE A—Office of the Secretary of the Interior (Parts 1—199)

SUBTITLE B—Regulations Relating to Public Lands

I Bureau of Reclamation, Department of the Interior (Parts 200—499)

II Bureau of Land Management, Department of the Interior (Parts 1000—9999)

III Utah Reclamation Mitigation and Conservation Commission (Parts 10000—10005)

Title 44—Emergency Management and Assistance

I Federal Emergency Management Agency (Parts 0—399)

IV Department of Commerce and Department of Transportation (Parts 400—499)

Title 45—Public Welfare

SUBTITLE A—Department of Health and Human Services (Parts 1—199)

SUBTITLE B—Regulations Relating to Public Welfare

II Office of Family Assistance (Assistance Programs), Administration for Children and Families, Department of Health and Human Services (Parts 200—299)

III Office of Child Support Enforcement (Child Support Enforcement Program), Administration for Children and Families, Department of Health and Human Services (Parts 300—399)

Title 45—Public Welfare—Continued

Chap.

IV Office of Refugee Resettlement, Administration for Children and Families Department of Health and Human Services (Parts 400—499)

V Foreign Claims Settlement Commission of the United States, Department of Justice (Parts 500—599)

VI National Science Foundation (Parts 600—699)

VII Commission on Civil Rights (Parts 700—799)

VIII Office of Personnel Management (Parts 800—899)

X Office of Community Services, Administration for Children and Families, Department of Health and Human Services (Parts 1000—1099)

XI National Foundation on the Arts and the Humanities (Parts 1100—1199)

XII ACTION (Parts 1200—1299)

XIII Office of Human Development Services, Department of Health and Human Services (Parts 1300—1399)

XVI Legal Services Corporation (Parts 1600—1699)

XVII National Commission on Libraries and Information Science (Parts 1700—1799)

XVIII Harry S. Truman Scholarship Foundation (Parts 1800—1899)

XXI Commission on Fine Arts (Parts 2100—2199)

XXII Christopher Columbus Quincentenary Jubilee Commission (Parts 2200—2299)

XXIII Arctic Research Commission (Part 2301)

XXIV James Madison Memorial Fellowship Foundation (Parts 2400—2499)

XXV Corporation for National and Community Service (Parts 2500—2599)

Title 46—Shipping

I Coast Guard, Department of Transportation (Parts 1—199)

II Maritime Administration, Department of Transportation (Parts 200—399)

IV Federal Maritime Commission (Parts 500—599)

Title 47—Telecommunication

I Federal Communications Commission (Parts 0—199)

II Office of Science and Technology Policy and National Security Council (Parts 200—299)

III National Telecommunications and Information Administration, Department of Commerce (Parts 300—399)

Title 48—Federal Acquisition Regulations System

1 Federal Acquisition Regulation (Parts 1—99)

2 Department of Defense (Parts 200—299)

3 Department of Health and Human Services (Parts 300—399)

Title 48—Federal Acquisition Regulations System—Continued

Chap.

4 Department of Agriculture (Parts 400—499)

5 General Services Administration (Parts 500—599)

6 Department of State (Parts 600—699)

7 Agency for International Development (Parts 700—799)

8 Department of Veterans Affairs (Parts 800—899)

9 Department of Energy (Parts 900—999)

10 Department of the Treasury (Parts 1000—1099)

12 Department of Transportation (Parts 1200—1299)

13 Department of Commerce (Parts 1300—1399)

14 Department of the Interior (Parts 1400—1499)

15 Environmental Protection Agency (Parts 1500—1599)

16 Office of Personnel Management Federal Employees Health Benefits Acquisition Regulation (Parts 1600—1699)

17 Office of Personnel Management (Parts 1700—1799)

18 National Aeronautics and Space Administration (Parts 1800—1899)

19 United States Information Agency (Parts 1900—1999)

20 Nuclear Regulatory Commission (Parts 2000—2099)

21 Office of Personnel Management, Federal Employees Group Life Insurance Federal Acquisition Regulation (Parts 2100—2199)

23 Social Security Administration (Parts 2300—2399)

24 Department of Housing and Urban Development (Parts 2400—2499)

25 National Science Foundation (Parts 2500—2599)

28 Department of Justice (Parts 2800—2899)

29 Department of Labor (Parts 2900—2999)

34 Department of Education Acquisition Regulation (Parts 3400—3499)

35 Panama Canal Commission (Parts 3500—3599)

44 Federal Emergency Management Agency (Parts 4400—4499)

51 Department of the Army Acquisition Regulations (Parts 5100—5199)

52 Department of the Navy Acquisition Regulations (Parts 5200—5299)

53 Department of the Air Force Federal Acquisition Regulation Supplement (Parts 5300—5399)

54 Defense Logistics Agency, Department of Defense (Part 5452)

57 African Development Foundation (Parts 5700—5799)

61 General Services Administration Board of Contract Appeals (Parts 6100—6199)

63 Department of Transportation Board of Contract Appeals (Parts 6300—6399)

99 Cost Accounting Standards Board, Office of Federal Procurement Policy, Office of Management and Budget (Parts 9900—9999)

Title 49—Transportation

Chap.

SUBTITLE A—Office of the Secretary of Transportation (Parts 1—99)

SUBTITLE B—Other Regulations Relating to Transportation

I Research and Special Programs Administration, Department of Transportation (Parts 100—199)

II Federal Railroad Administration, Department of Transportation (Parts 200—299)

III Federal Highway Administration, Department of Transportation (Parts 300—399)

IV Coast Guard, Department of Transportation (Parts 400—499)

V National Highway Traffic Safety Administration, Department of Transportation (Parts 500—599)

VI Federal Transit Administration, Department of Transportation (Parts 600—699)

VII National Railroad Passenger Corporation (AMTRAK) (Parts 700—799)

VIII National Transportation Safety Board (Parts 800—999)

X Surface Transportation Board, Department of Transportation (Parts 1000—1399)

Title 50—Wildlife and Fisheries

I United States Fish and Wildlife Service, Department of the Interior (Parts 1—199)

II National Marine Fisheries Service, National Oceanic and Atmospheric Administration, Department of Commerce (Parts 200—299)

III International Fishing and Related Activities (Parts 300—399)

IV Joint Regulations (United States Fish and Wildlife Service, Department of the Interior and National Marine Fisheries Service, National Oceanic and Atmospheric Administration, Department of Commerce); Endangered Species Committee Regulations (Parts 400—499)

V Marine Mammal Commission (Parts 500—599)

VI Fishery Conservation and Management, National Oceanic and Atmospheric Administration, Department of Commerce (Parts 600—699)

CFR Index and Finding Aids

Subject/Agency Index

List of Agency Prepared Indexes

Parallel Tables of Statutory Authorities and Rules

Acts Requiring Publication in the Federal Register

List of CFR Titles, Chapters, Subchapters, and Parts

Alphabetical List of Agencies Appearing in the CFR

Alphabetical List of Agencies Appearing in the CFR

(Revised as of June 20, 1997)

Agency	CFR Title, Subtitle or Chapter
ACTION	45, XII
Administrative Committee of the Federal Register	1, I
Advanced Research Projects Agency	32, I
Advisory Commission on Intergovernmental Relations	5, VII
Advisory Committee on Federal Pay	5, IV
Advisory Council on Historic Preservation	36, VIII
African Development Foundation	22, XV
Federal Acquisition Regulation	48, 57
Agency for International Development	22, II
Federal Acquisition Regulation	48, 7
Agricultural Marketing Service	7, I, IX, X, XI
Agricultural Research Service	7, V
Agriculture Department	
Agricultural Marketing Service	7, I, IX, X, XI
Agricultural Research Service	7, V
Animal and Plant Health Inspection Service	7, III; 9, I
Commodity Credit Corporation	7, XIV
Cooperative State Research, Education, and Extension Service	7, XXXIV
Economic Research Service	7, XXXVII
Energy, Office of	7, XXIX
Environmental Quality, Office of	7, XXXI
Farm Service Agency	7, VII, XVIII
Federal Acquisition Regulation	48, 4
Federal Crop Insurance Corporation	7, IV
Finance and Management, Office of	7, XXX
Food and Consumer Service	7, II
Food Safety and Inspection Service	9, III
Foreign Agricultural Service	7, XV
Forest Service	36, II
Grain Inspection, Packers and Stockyards Administration	7, VIII; 9, II
Information Resources Management, Office of	7, XXVII
Inspector General, Office of	7, XXVI
National Agricultural Library	7, XLI
National Agricultural Statistics Service	7, XXXVI
Natural Resources Conservation Service	7, VI
Operations, Office of	7, XXVIII
Rural Business-Cooperative Service	7, XVIII, XLII
Rural Development Administration	7, XLII
Rural Housing Service	7, XVIII, XXXV
Rural Telephone Bank	7, XVI
Rural Utilities Service	7, XVII, XVIII, XLII
Secretary of Agriculture, Office of	7, Subtitle A
Transportation, Office of	7, XXXIII
World Agricultural Outlook Board	7, XXXVIII
Air Force Department	32, VII
Federal Acquisition Regulation Supplement	48, 53
Alaska Natural Gas Transportation System, Office of the Federal Inspector	10, XV
Alcohol, Tobacco and Firearms, Bureau of	27, I
AMTRAK	49, VII
American Battle Monuments Commission	36, IV
American Indians, Office of the Special Trustee	25, VII

Agency	CFR Title, Subtitle or Chapter
Animal and Plant Health Inspection Service	7, III; 9, I
Appalachian Regional Commission	5, IX
Architectural and Transportation Barriers Compliance Board	36, XI
Arctic Research Commission	45, XXIII
Armed Forces Retirement Home	5, XI
Arms Control and Disarmament Agency, United States	22, VI
Army Department	32, V
Engineers, Corps of	33, II; 36, III
Federal Acquisition Regulation	48, 51
Assassination Records Review Board	36, XIV
Benefits Review Board	20, VII
Bilingual Education and Minority Languages Affairs, Office of	34, V
Blind or Severely Disabled, Committee for Purchase From People Who Are	41, 51
Board for International Broadcasting	22, XIII
Census Bureau	15, I
Central Intelligence Agency	32, XIX
Child Support Enforcement, Office of	45, III
Children and Families, Administration for	45, II, III, IV, X
Christopher Columbus Quincentenary Jubilee Commission	45, XXII
Civil Rights, Commission on	45, VII
Civil Rights, Office for	34, I
Coast Guard	33, I; 46, I; 49, IV
Commerce Department	44, IV
Census Bureau	15, I‘
Economic Affairs, Under Secretary	37, V
Economic Analysis, Bureau of	15, VIII
Economic Development Administration	13, III
Emergency Management and Assistance	44, IV
Export Administration, Bureau of	15, VII
Federal Acquisition Regulation	48, 13
Fishery Conservation and Management	50, VI
Foreign-Trade Zones Board	15, IV
International Trade Administration	15, III; 19, III
National Institute of Standards and Technology	15, II
National Marine Fisheries Service	50, II, IV
National Oceanic and Atmospheric Administration	15, IX; 50, II, III, IV, VI
National Telecommunications and Information Administration	15, XXIII; 47, III
National Weather Service	15, IX
Patent and Trademark Office	37, I
Productivity, Technology and Innovation, Assistant Secretary for	37, IV
Secretary of Commerce, Office of	15, Subtitle A
Technology, Under Secretary for	37, V
Technology Administration	15, XI
Technology Policy, Assistant Secretary for	37, IV
Commercial Space Transportation	14, III
Commodity Credit Corporation	7, XIV
Commodity Futures Trading Commission	5, XLI; 17, I
Community Planning and Development, Office of Assistant Secretary for	24, V, VI
Community Services, Office of	45, X
Comptroller of the Currency	12, I
Construction Industry Collective Bargaining Commission	29, IX
Consumer Product Safety Commission	5, LXXI; 16, II
Cooperative State Research, Education, and Extension Service	7, XXXIV
Copyright Office	37, II
Cost Accounting Standards Board	48, 99
Council on Environmental Quality	40, V
Customs Service, United States	19, I
Defense Contract Audit Agency	32, I
Defense Department	5, XXVI; 32, Subtitle A
Advanced Research Projects Agency	32, I
Air Force Department	32, VII
Army Department	32, V; 33, II; 36, III, 48, 51

Agency	CFR Title, Subtitle or Chapter
Defense Intelligence Agency	32, I
Defense Logistics Agency	32, I, XII; 48, 54
Defense Mapping Agency	32, I
Engineers, Corps of	33, II; 36, III
Federal Acquisition Regulation	48, 2
Navy Department	32, VI; 48, 52
Secretary of Defense, Office of	32, I
Defense Contract Audit Agency	32, I
Defense Intelligence Agency	32, I
Defense Logistics Agency	32, XII; 48, 54
Defense Mapping Agency	32, I
Defense Nuclear Facilities Safety Board	10, XVII
Delaware River Basin Commission	18, III
Drug Enforcement Administration	21, II
East-West Foreign Trade Board	15, XIII
Economic Affairs, Under Secretary	37, V
Economic Analysis, Bureau of	15, VIII
Economic Development Administration	13, III
Economic Research Service	7, XXXVII
Education, Department of	5, LIII
Bilingual Education and Minority Languages Affairs, Office of	34, V
Civil Rights, Office for	34, I
Educational Research and Improvement, Office of	34, VII
Elementary and Secondary Education, Office of	34, II
Federal Acquisition Regulation	48, 34
Postsecondary Education, Office of	34, VI
Secretary of Education, Office of	34, Subtitle A
Special Education and Rehabilitative Services, Office of	34, III
Vocational and Adult Education, Office of	34, IV
Educational Research and Improvement, Office of	34, VII
Elementary and Secondary Education, Office of	34, II
Employees' Compensation Appeals Board	20, IV
Employees Loyalty Board	5, V
Employment and Training Administration	20, V
Employment Standards Administration	20, VI
Endangered Species Committee	50, IV
Energy, Department of	5, XXIII; 10, II, III, X
Federal Acquisition Regulation	48, 9
Federal Energy Regulatory Commission	5, XXIV; 18, I
Property Management Regulations	41, 109
Energy, Office of	7, XXIX
Engineers, Corps of	33, II; 36, III
Engraving and Printing, Bureau of	31, VI
Enrichment Corporation, United States	10, XI
Environmental Protection Agency	5, LIV; 40, I
Federal Acquisition Regulation	48, 15
Property Management Regulations	41, 115
Environmental Quality, Office of	7, XXXI
Equal Employment Opportunity Commission	5, LXII; 29, XIV
Equal Opportunity, Office of Assistant Secretary for	24, I
Executive Office of the President	3, I
Administration, Office of	5, XV
Environmental Quality, Council on	40, V
Management and Budget, Office of	25, III, LXXVII; 48, 99
National Drug Control Policy, Office of	21, III
National Security Council	32, XXI; 47, 2
Presidential Documents	3
Science and Technology Policy, Office of	32, XXIV; 47, II
Trade Representative, Office of the United States	15, XX
Export Administration, Bureau of	15, VII
Export-Import Bank of the United States	5, LII; 12, IV
Family Assistance, Office of	45, II
Farm Credit Administration	5, XXXI; 12, VI
Farm Credit System Insurance Corporation	5, XXX; 12, XIV
Farm Service Agency	7, VII, XVIII
Federal Acquisition Regulation	48, 1
Federal Aviation Administration	14, I

Agency	CFR Title, Subtitle or Chapter
Commercial Space Transportation	14, III
Federal Claims Collection Standards	4, II
Federal Communications Commission	5, XXIX; 47, I
Federal Contract Compliance Programs, Office of	41, 60
Federal Crop Insurance Corporation	7, IV
Federal Deposit Insurance Corporation	5, XXII; 12, III
Federal Election Commission	11, I
Federal Emergency Management Agency	44, I
Federal Acquisition Regulation	48, 44
Federal Employees Group Life Insurance Federal Acquisition Regulation	48, 21
Federal Employees Health Benefits Acquisition Regulation	48, 16
Federal Energy Regulatory Commission	5, XXIV; 18, I
Federal Financial Institutions Examination Council	12, XI
Federal Financing Bank	12, VIII
Federal Highway Administration	23, I, II; 49, III
Federal Home Loan Mortgage Corporation	1, IV
Federal Housing Enterprise Oversight Office	12, XVII
Federal Housing Finance Board	12, IX
Federal Inspector for the Alaska Natural Gas Transportation System, Office of	10, XV
Federal Labor Relations Authority, and General Counsel of the Federal Labor Relations Authority	5, XIV; 22, XIV
Federal Law Enforcement Training Center	31, VII
Federal Maritime Commission	46, IV
Federal Mediation and Conciliation Service	29, XII
Federal Mine Safety and Health Review Commission	5, LXXIV; 29, XXVII
Federal Pay, Advisory Committee on	5, IV
Federal Prison Industries, Inc.	28, III
Federal Procurement Policy Office	48, 99
Federal Property Management Regulations	41, 101
Federal Property Management Regulations System	41, Subtitle C
Federal Railroad Administration	49, II
Federal Register, Administrative Committee of	1, I
Federal Register, Office of	1, II
Federal Reserve System	12, II
Board of Governors	5, LVIII
Federal Retirement Thrift Investment Board	5, VI, LXXVI
Federal Service Impasses Panel	5, XIV
Federal Trade Commission	5, XLVII; 16, I
Federal Transit Administration	49, VI
Federal Travel Regulation System	41, Subtitle F
Finance and Management, Office of	7, XXX
Fine Arts, Commission on	45, XXI
Fiscal Service	31, II
Fish and Wildlife Service, United States	50, I, IV
Fishery Conservation and Management	50, VI
Food and Drug Administration	21, I
Food and Consumer Service	7, II
Food Safety and Inspection Service	9, III
Foreign Agricultural Service	7, XV
Foreign Assets Control, Office of	31, V
Foreign Claims Settlement Commission of the United States	45, V
Foreign Service Grievance Board	22, IX
Foreign Service Impasse Disputes Panel	22, XIV
Foreign Service Labor Relations Board	22, XIV
Foreign-Trade Zones Board	15, IV
Forest Service	36, II
General Accounting Office	4, I, II
General Services Administration	5, LVII
Contract Appeals, Board of	48, 61
Federal Acquisition Regulation	48, 5
Federal Property Management Regulations System	41, 101, 105
Federal Travel Regulation System	41, Subtitle F
Payment From a Non-Federal Source for Travel Expenses	41, 304
Payment of Expenses Connected With the Death of Certain Employees	41, 303
Relocation Allowances	41, 302

Agency	CFR Title, Subtitle or Chapter
Travel Allowances	41, 301
Geological Survey	30, IV
Government Ethics, Office of	5, XVI
Government National Mortgage Association	24, III
Grain Inspection, Packers and Stockyards Administration	7, VIII; 9, II
Great Lakes Pilotage	46, III
Harry S. Truman Scholarship Foundation	45, XVIII
Health and Human Services, Department of	5, XLV; 45, Subtitle A
Child Support Enforcement, Office of	45, III
Children and Families, Administration for	45, II, III, IV, X
Community Services, Office of	45, X
Family Assistance, Office of	45, II
Federal Acquisition Regulation	48, 3
Food and Drug Administration	21, I
Health Care Financing Administration	42, IV
Human Development Services, Office of	45, XIII
Indian Health Service	25, V
Inspector General (Health Care), Office of	42, V
Public Health Service	42, I
Refugee Resettlement, Office of	45, IV
Health Care Financing Administration	42, IV
Housing and Urban Development, Department of	5, LXV; 24, Subtitle B
Community Planning and Development, Office of Assistant Secretary for	24, V, VI
Equal Opportunity, Office of Assistant Secretary for	24, I
Federal Acquisition Regulation	48, 24
Federal Housing Enterprise Oversight, Office of	12, XVII
Government National Mortgage Association	24, III
Housing—Federal Housing Commissioner, Office of Assistant Secretary for	24, II, VIII, X, XX
Inspector General, Office of	24, XII
Public and Indian Housing, Office of Assistant Secretary for	24, IX
Secretary, Office of	24, Subtitle A, VII
Housing—Federal Housing Commissioner, Office of Assistant Secretary for	24, II, VIII, X, XX
Human Development Services, Office of	45, XIII
Immigration and Naturalization Service	8, I
Independent Counsel, Office of	28, VII
Indian Affairs, Bureau of	25, I, V
Indian Affairs, Office of the Assistant Secretary	25, VI
Indian Arts and Crafts Board	25, II
Indian Health Service	25, V
Information Agency, United States	22, V
Federal Acquisition Regulation	48, 19
Information Resources Management, Office of	7, XXVII
Information Security Oversight Office, National Archives and Records Administration	32, XX
Inspector General	
Agriculture Department	7, XXVI
Health and Human Services Department	42, V
Housing and Urban Development Department	24, XII
Institute of Peace, United States	22, XVII
Inter-American Foundation	5, LXIII; 22, X
Intergovernmental Relations, Advisory Commission on	5, VII
Interior Department	
American Indians, Office of the Special Trustee	25, VII
Endangered Species Committee	50, IV
Federal Acquisition Regulation	48, 14
Federal Property Management Regulations System	41, 114
Fish and Wildlife Service, United States	50, I, IV
Geological Survey	30, IV
Indian Affairs, Bureau of	25, I, V
Indian Affairs, Office of the Assistant Secretary	25, VI
Indian Arts and Crafts Board	25, II
Land Management, Bureau of	43, II
Minerals Management Service	30, II
Mines, Bureau of	30, VI
National Indian Gaming Commission	25, III

Agency	CFR Title, Subtitle or Chapter
National Park Service	36, I
Reclamation, Bureau of	43, I
Secretary of the Interior, Office of	43, Subtitle A
Surface Mining and Reclamation Appeals, Board of	30, III
Surface Mining Reclamation and Enforcement, Office of	30, VII
Internal Revenue Service	26, I
International Boundary and Water Commission, United States and Mexico, United States Section	22, XI
International Development, Agency for	22, II
Federal Acquisition Regulation	48, 7
International Development Cooperation Agency, United States	22, XII
International Development, Agency for	22, II; 48, 7
Overseas Private Investment Corporation	5, XXXIII; 22, VII
International Fishing and Related Activities	50, III
International Investment, Office of	31, VIII
International Joint Commission, United States and Canada	22, IV
International Organizations Employees Loyalty Board	5, V
International Trade Administration	15, III; 19, III
International Trade Commission, United States	19, II
Interstate Commerce Commission	5, XL
James Madison Memorial Fellowship Foundation	45, XXIV
Japan–United States Friendship Commission	22, XVI
Joint Board for the Enrollment of Actuaries	20, VIII
Justice Department	5, XXVIII; 28, I
Drug Enforcement Administration	21, II
Federal Acquisition Regulation	48, 28
Federal Claims Collection Standards	4, II
Federal Prison Industries, Inc.	28, III
Foreign Claims Settlement Commission of the United States	45, V
Immigration and Naturalization Service	8, I
Offices of Independent Counsel	28, VI
Prisons, Bureau of	28, V
Property Management Regulations	41, 128
Labor Department	5, XLII
Benefits Review Board	20, VII
Employees' Compensation Appeals Board	20, IV
Employment and Training Administration	20, V
Employment Standards Administration	20, VI
Federal Acquisition Regulation	48, 29
Federal Contract Compliance Programs, Office of	41, 60
Federal Procurement Regulations System	41, 50
Labor-Management Standards, Office of	29, II, IV
Mine Safety and Health Administration	30, I
Occupational Safety and Health Administration	29, XVII
Pension and Welfare Benefits Administration	29, XXV
Public Contracts	41, 50
Secretary of Labor, Office of	29, Subtitle A
Veterans' Employment and Training, Office of the Assistant Secretary for	41, 61; 20, IX
Wage and Hour Division	29, V
Workers' Compensation Programs, Office of	20, I
Labor-Management Standards, Office of	29, II, IV
Land Management, Bureau of	43, II
Legal Services Corporation	45, XVI
Library of Congress	36, VII
Copyright Office	37, II
Management and Budget, Office of	5, III, LXXVII; 48, 99
Marine Mammal Commission	50, V
Maritime Administration	46, II
Merit Systems Protection Board	5, II
Micronesian Status Negotiations, Office for	32, XXVII
Mine Safety and Health Administration	30, I
Minerals Management Service	30, II
Mines, Bureau of	30, VI
Minority Business Development Agency	15, XIV
Miscellaneous Agencies	1, IV

Agency	CFR Title, Subtitle or Chapter
Monetary Offices	31, I
National Aeronautics and Space Administration	5, LIX; 14, V
Federal Acquisition Regulation	48, 18
National Agricultural Library	7, XLI
National Agricultural Statistics Service	7, XXXVI
National Archives and Records Administration	5, LXVI; 36, XII
Information Security Oversight Office	32, XX
National Bureau of Standards	15, II
National Capital Planning Commission	1, IV
National Commission for Employment Policy	1, IV
National Commission on Libraries and Information Science	45, XVII
National and Community Service, Corporation for	45, XXV
National Council on Disability	34, XII
National Credit Union Administration	12, VII
National Drug Control Policy, Office of	21, III
National Foundation on the Arts and the Humanities	45, XI
National Highway Traffic Safety Administration	23, II, III; 49, V
National Indian Gaming Commission	25, III
National Institute for Literacy	34, XI
National Institute of Standards and Technology	15, II
National Labor Relations Board	5, LXI; 29, I
National Marine Fisheries Service	50, II, IV
National Mediation Board	29, X
National Oceanic and Atmospheric Administration	15, IX; 50, II, III, IV, VI
National Park Service	36, I
National Railroad Adjustment Board	29, III
National Railroad Passenger Corporation (AMTRAK)	49, VII
National Science Foundation	5, XLIII; 45, VI
Federal Acquisition Regulation	48, 25
National Security Council	32, XXI
National Security Council and Office of Science and Technology Policy	47, II
National Telecommunications and Information Administration	15, XXIII; 47, III
National Transportation Safety Board	49, VIII
National Weather Service	15, IX
Natural Resources Conservation Service	7, VI
Navajo and Hopi Indian Relocation, Office of	25, IV
Navy Department	32, VI
Federal Acquisition Regulation	48, 52
Neighborhood Reinvestment Corporation	24, XXV
Northeast Dairy Compact Commission	7, XIII
Nuclear Regulatory Commission	5, XLVIII; 10, I
Federal Acquisition Regulation	48, 20
Occupational Safety and Health Administration	29, XVII
Occupational Safety and Health Review Commission	29, XX
Offices of Independent Counsel	28, VI
Operations Office	7, XXVIII
Overseas Private Investment Corporation	5, XXXIII; 22, VII
Panama Canal Commission	48, 35
Panama Canal Regulations	35, I
Patent and Trademark Office	37, I
Payment From a Non-Federal Source for Travel Expenses	41, 304
Payment of Expenses Connected With the Death of Certain Employees	41, 303
Peace Corps	22, III
Pennsylvania Avenue Development Corporation	36, IX
Pension and Welfare Benefits Administration	29, XXV
Pension Benefit Guaranty Corporation	29, XL
Personnel Management, Office of	5, I, XXXV; 45, VIII
Federal Acquisition Regulation	48, 17
Federal Employees Group Life Insurance Federal Acquisition Regulation	48, 21
Federal Employees Health Benefits Acquisition Regulation	48, 16
Postal Rate Commission	5, XLVI; 39, III
Postal Service, United States	5, LX; 39, I
Postsecondary Education, Office of	34, VI
President's Commission on White House Fellowships	1, IV

Agency	CFR Title, Subtitle or Chapter
Presidential Commission on the Assignment of Women in the Armed Forces	32, XXIX
Presidential Documents	3
Prisons, Bureau of	28, V
Productivity, Technology and Innovation, Assistant Secretary	37, IV
Public Contracts, Department of Labor	41, 50
Public and Indian Housing, Office of Assistant Secretary for	24, IX
Public Health Service	42, I
Railroad Retirement Board	20, II
Reclamation, Bureau of	43, I
Refugee Resettlement, Office of	45, IV
Regional Action Planning Commissions	13, V
Relocation Allowances	41, 302
Research and Special Programs Administration	49, I
Rural Business-Cooperative Service	7, XVIII, XLII
Rural Development Administration	7, XLII
Rural Housing Service	7, XVIII, XXXV
Rural Telephone Bank	7, XVI
Rural Utilities Service	7, XVII, XVIII, XLII
Saint Lawrence Seaway Development Corporation	33, IV
Science and Technology Policy, Office of	32, XXIV
Science and Technology Policy, Office of, and National Security Council	47, II
Secret Service	31, IV
Securities and Exchange Commission	17, II
Selective Service System	32, XVI
Small Business Administration	13, I
Smithsonian Institution	36, V
Social Security Administration	20, III; 48, 23
Soldiers' and Airmen's Home, United States	5, XI
Special Counsel, Office of	5, VIII
Special Education and Rehabilitative Services, Office of	34, III
State Department	22, I
Federal Acquisition Regulation	48, 6
Surface Mining and Reclamation Appeals, Board of	30, III
Surface Mining Reclamation and Enforcement, Office of	30, VII
Surface Transportation Board	49, X
Susquehanna River Basin Commission	18, VIII
Technology Administration	15, XI
Technology Policy, Assistant Secretary for	37, IV
Technology, Under Secretary for	37, V
Tennessee Valley Authority	5, LXIX; 18, XIII
Thrift Depositor Protection Oversight Board	12, XV
Thrift Supervision Office, Department of the Treasury	12, V
Trade Representative, United States, Office of	15, XX
Transportation, Department of	5, L
Coast Guard	33, I; 46, I; 49, IV
Commercial Space Transportation	14, III
Contract Appeals, Board of	48, 63
Emergency Management and Assistance	44, IV
Federal Acquisition Regulation	48, 12
Federal Aviation Administration	14, I
Federal Highway Administration	23, I, II; 49, III
Federal Railroad Administration	49, II
Federal Transit Administration	49, VI
Maritime Administration	46, II
National Highway Traffic Safety Administration	23, II, III; 49, V
Research and Special Programs Administration	49, I
Saint Lawrence Seaway Development Corporation	33, IV
Secretary of Transportation, Office of	14, II; 49, Subtitle A
Surface Transportation Board	49, X
Transportation, Office of	7, XXXIII
Travel Allowances	41, 301
Treasury Department	5, XXI; 17, IV
Alcohol, Tobacco and Firearms, Bureau of	27, I
Community Development Financial Institutions Fund	12, XVIII
Comptroller of the Currency	12, I

Agency	CFR Title, Subtitle or Chapter
Customs Service, United States	19, I
Engraving and Printing, Bureau of	31, VI
Federal Acquisition Regulation	48, 10
Federal Law Enforcement Training Center	31, VII
Fiscal Service	31, II
Foreign Assets Control, Office of	31, V
Internal Revenue Service	26, I
International Investment, Office of	31, VIII
Monetary Offices	31, I
Secret Service	31, IV
Secretary of the Treasury, Office of	31, Subtitle A
Thrift Supervision, Office of	12, V
Truman, Harry S. Scholarship Foundation	45, XVIII
United States and Canada, International Joint Commission	22, IV
United States and Mexico, International Boundary and Water Commission, United States Section	22, XI
United States Enrichment Corporation	10, XI
Utah Reclamation Mitigation and Conservation Commission	43, III
Veterans Affairs Department	38, I
Federal Acquisition Regulation	48, 8
Veterans' Employment and Training, Office of the Assistant Secretary for	41, 61; 20, IX
Vice President of the United States, Office of	32, XXVIII
Vocational and Adult Education, Office of	34, IV
Wage and Hour Division	29, V
Water Resources Council	18, VI
Workers' Compensation Programs, Office of	20, I
World Agricultural Outlook Board	7, XXXVIII

REDESIGNATION TABLES

EDITORIAL NOTE: Title 35 was revised at 31 FR 12202, Sept. 16, 1966. The following tables show where sections of Title 5, CFR, and Title 35, CFR, 1960, including the supplements thereto, have been carried into 35 CFR.

	Page
Derivation Table:	
Table 1. Derivation of Sections	225
Distribution Tables:	
Table 2. Code of Federal Regulations	245
Table 3. Executive Orders	256
Table 4. Proclamations	257
Table 5. Canal Zone Orders	258
Table 6. Navigation Regulations	258
Table 7. Executive Regulations	261
Table 8. Canal Zone Official Postal Guide	262
Table 9. Canal Zone Postal Savings System Booklet	268
Table 10. Canal Zone Postal Money Order System Booklet	269
Table 11. Miscellaneous Regulations	271
Miscellaneous Tables:	
Table 12. Omitted 35 CFR (1960) Sections	272
Table 13. Orders Omitted as Executed, Superseded, or Obsolete	272
Table 14. Executive Orders Omitted but not Repealed	291
Table 15. Orders and Proclamations Repealed Prior to Revision	292
Table 16. Executive Orders to Canal Zone Code	295

Table 1—DERIVATION OF SECTIONS

Showing the derivation or source of sections of this revision of 35 CFR. In the derivation or right hand column, ''E.O.'' means Executive Order of the President of the United States; ''C.Z.O.'' means Canal Zone Order of the Secretary of War or Secretary of the Army; ''E.R.'' means Executive Regulations of the Governor of the Canal Zone; ''Nav. Reg.'' means Rules and Regulations Governing Navigation of the Panama Canal and Adjacent Waters, 1952 ed., as amended and supplemented, and as expanded in 1957 (chapter 10); and ''Gov. Reg.'' means Regulations of the Governor of the Canal Zone. citations in that column to 35 CFR (1960 comp.) and 5 CFR (1964 comp.) include the pocket supplements thereto.

Revised 35 CFR	Derivation
Sec.	
1.1	35 CFR (1960) 1.1.
1.2	E.O. 2208, June 8, 1915.
1.3	E.O. 7676, July 26, 1937, §§ 2, 3.
1.4	E.O. 7676, July 26, 1937, § 4.
3.1	E.O. 9746, July 1, 1946, §§ 3, 4; E.O. 10595, Feb. 7, 1955.

Revised 35 CFR	Derivation
Sec.	
3.2	E.O. 9746, July 1, 1946, § 1; E.O. 10595, Feb. 7, 1955; Letter of Pres. Harry S. Truman, May 30, 1952.
3.3	E.O. 9746, July 1, 1946, § 6.
3.3	E.O. 10595, Feb. 7, 1955.
3.4	New.
3.21	E.O. 9746, July 1, 1946, § 2.
3.21	E.O. 10595, Feb. 7, 1955.
3.22	35 CFR (1960) 1.3.
3.23	E.R. 31, Rev. No. 2, Aug. 1, 1962.
5.1	35 CFR (1960) 21.1.
5.2	E.O. 8515, Aug. 13, 1940.
5.21	E.O. 3130, July 25, 1919.
5.22	E.O. 7979, Sept. 26, 1938.
5.23	C.Z.O. 7, Mar. 31, 1947.
5.24	C.Z.O. 23, May 18, 1951; C.Z.O. 29, Sept. 26, 1952; C.Z.O. 56, Aug. 24, 1961.
5.25	C.Z.O. 29, Sept. 26, 1952; C.Z.O. 33, Apr. 16, 1954; C.Z.O. 56, Aug. 24, 1961.
5.26	C.Z.O. 29, Sept. 26, 1952; C.Z.O. 53, Jan. 20, 1960.
5.27	C.Z.O. 18, Sept. 14, 1949; C.Z.O. 48, Dec. 4, 1957.
5.28	C.Z.O. 54, Aug. 22, 1960.
5.29	C.Z.O. 28, Aug. 11, 1952.
5.30	C.Z.O. 54, Aug. 22, 1960.
5.31	E.O. 2825, Mar. 25, 1918; E.O. 3352, Nov. 6, 1920.
5.41	C.Z.O. 13, Apr. 21, 1948.
5.42	C.Z.O. 54, Aug. 22, 1960.
5.43	E.O. 5185, Sept. 6, 1929.
5.44	C.Z.O. 9, June 6, 1947.
5.45	C.Z.O. 14, July 15, 1948.
5.46	E.O. 9434, Apr. 8, 1944.
5.47	C.Z.O. 44, Sept. 7, 1956.
5.48	C.Z.O. 34, Sept. 18, 1954; C.Z.O. 47, July 9, 1957.
5.49	C.Z.O. 12, Mar. 9, 1948; C.Z.O. 34, Sept. 18, 1954.
5.61	C.Z.O. 29, Sept. 26, 1952; C.Z.O. 53, Jan. 20, 1960; C.Z.O. 56, Aug. 24, 1961.
5.62	C.Z.O. 28, Aug. 11, 1952.
5.71	C.Z.O. 65, June 18, 1963.
5.81	C.Z.O. 29, Sept. 26, 1952; C.Z.O. 53, Jan. 20, 1960; C.Z.O. 56, Aug. 24, 1961.
5.82	Various E.O.s and C.Z.O.s establishing military reservations. See 35 CFR (1960) 21.3, 21.4.
5.83	New.
51.1	35 CFR (1960) 5.1.
51.2	35 CFR (1960) 5.2.
51.3	35 CFR (1960) 5.3.
51.21	35 CFR (1960) 5.11.
51.22	35 CFR (1960) 5.12.
51.31	35 CFR (1960) 5.21.
51.32	35 CFR (1960) 5.22.
51.33	35 CFR (1960) 5.23.
51.41	35 CFR (1960) 5.31.
51.42	35 CFR (1960) 5.32.
51.43	35 CFR (1960) 5.33.
51.44	35 CFR (1960) 5.34.
51.45	35 CFR (1960) 5.35.
51.46	35 CFR (1960) 5.36.
51.47	35 CFR (1960) 5.37.
51.61	35 CFR (1960) 5.41.
51.62	35 CFR (1960) 5.42.
51.71	35 CFR (1960) 5.51.
51.81	35 CFR (1960) 5.61.
51.121	35 CFR (1960) 5.101.
51.122	35 CFR (1960) 5.102.

Revised 35 CFR	Derivation
Sec.	
51.123	35 CFR (1960) 5.103.
51.124	35 CFR (1960) 5.104.
51.181	New.
53.1	35 CFR (1960) 6.1.
53.2	35 CFR (1960) 6.2.
53.3	35 CFR (1960) 6.3.
53.4	35 CFR (1960) 6.4.
53.5	35 CFR (1960) 6.5.
53.6	35 CFR (1960) 6.6.
53.7	35 CFR (1960) 6.7.
53.8	35 CFR (1960) 6.8.
53.9	35 CFR (1960) 6.9.
53.10	35 CFR (1960) 6.10.
53.11	35 CFR (1960) 6.11.
57.1	35 CFR (1960) 9.1.
57.2	35 CFR (1960) 9.2.
57.3	35 CFR (1960) 9.3.
57.4	35 CFR (1960) 9.4; Gov. Reg., Aug. 1, 1931.
57.5	Nav. Reg. 16.5.
57.6	Nav. Reg. 16.6.
57.7	35 CFR (1960) 9.11.
57.8	35 CFR (1960) 9.7.
57.9	New.
57.10	35 CFR (1960) 9.14.
57.11	35 CFR (1960) 9.15.
57.12	35 CFR (1960) 9.16.
57.13	35 CFR (1960) 9.17.
57.14	35 CFR (1960) 9.8.
57.15	35 CFR (1960) 9.12.
57.16	New.
57.17	New.
57.18	35 CFR (1960) 9.18; Gov. Reg. 17 FR 2389, Mar. 20, 1952.
59.1	35 CFR (1960) 10.1.
59.2	35 CFR (1960) 10.2.
59.3	35 CFR (1960) 10.39.
59.4	35 CFR (1960) 10.38.
59.21	35 CFR (1960) 10.3, 10.4.
59.22	35 CFR (1960) 10.3.
59.23	35 CFR (1960) 10.3.
59.24	35 CFR (1960) 10.4.
59.25	35 CFR (1960) 10.4.
59.26	35 CFR (1960) 10.5.
59.27	35 CFR (1960) 10.6
59.28	35 CFR (1960) 10.3.
59.29	New.
59.51	35 CFR (1960) 10.7, 10.12.
59.52	35 CFR (1960) 10.8, 10.13.
59.53	35 CFR (1960) 10.9.
59.54	35 CFR (1960) 10.9, 10.15.
59.55	35 CFR (1960) 10.17.
59.56	35 CFR (1960) 10.10.
59.57	35 CFR (1960) 10.11.
59.58	35 CFR (1960) 10.25.
59.59	35 CFR (1960) 10.18.
59.60	35 CFR (1960) 10.19.
59.61	35 CFR (1960) 10.20.
59.62	35 CFR (1960) 10.21.
59.81	35 CFR (1960) 10.22.
59.82	35 CFR (1960) 10.23.
59.83	35 CFR (1960) 4.30a.
59.84	35 CFR (1960) 4.30a.
59.85	35 CFR (1960) 4.30b.
59.86	35 CFR (1960) 4.21a.

Revised 35 CFR	Derivation
Sec.	
59.87	35 CFR (1960) 10.24.
59.88	35 CFR (1960) 10.26.
59.111	35 CFR (1960) 10.34, 10.35.
59.112	35 CFR (1960) 10.35a.
59.113	35 CFR (1960) 10.36.
59.114	35 CFR (1960) 10.37.
59.131	35 CFR (1960) 10.27, 10.28.
59.132	35 CFR (1960) 10.29, 10.30.
59.133	35 CFR (1960) 10.31.
59.134	35 CFR (1960) 10.32, 10.33.
59.135	35 CFR (1960) 10.40.
61.1	35 CFR (1960) 24.150.
61.2	35 CFR (1960) 24.150.
61.3	35 CFR (1960) 24.150.
61.4	35 CFR (1960) 24.150.
61.5	35 CFR (1960) 24.150.
61.31	New.
61.32	New.
61.33	New.
61.34	New.
61.35	New.
61.36	New.
61.37	New.
61.38	New.
61.39	New.
61.61	35 CFR (1960) 24.170.
61.62	35 CFR (1960) 24.171.
61.63	35 CFR (1960) 24.172.
61.64	35 CFR (1960) 24.173.
61.65	35 CFR (1960) 24.174.
61.66	35 CFR (1960) 24.175.
61.67	35 CFR (1960) 24.176.
61.68	35 CFR (1960) 24.177.
61.69	35 CFR (1960) 24.178.
61.70	35 CFR (1960) 24.179
61.91	35 CFR (1960) 24.190.
61.92	35 CFR (1960) 24.191.
61.93	35 CFR (1960) 24.192.
61.94	35 CFR (1960) 24.193.
61.95	35 CFR (1960) 24.194.
61.96	35 CFR (1960) 24.195.
61.121	35 CFR (1960) 24.37.
61.122	35 CFR (1960) 24.38.
61.123	35 CFR (1960) 24.39.
61.124	35 CFR (1960) 24.40.
61.125	35 CFR (1960) 24.41.
61.126	35 CFR (1960) 24.42.
61.127	35 CFR (1960) 24.43.
61.128	35 CFR (1960) 24.44.
61.129	35 CFR (1960) 24.45.
61.130	35 CFR (1960) 24.46.
61.131	35 CFR (1960) 24.47.
61.141	35 CFR (1960) 24.48.
61.142	35 CFR (1960) 24.49.
61.151	35 CFR (1960) 24.50.
61.152	35 CFR (1960) 24.51.
61.153	35 CFR (1960) 24.52.
61.154	35 CFR (1960) 24.53.
61.155	35 CFR (1960) 24.54.
61.156	35 CFR (1960) 24.54a.
61.157	35 CFR (1960) 24.55.
61.158	35 CFR (1960) 24.55a.
61.171	35 CFR (1960) 24.56.
61.172	35 CFR (1960) 24.57.

Revised 35 CFR	Derivation
Sec.	
61.173	35 CFR (1960) 24.58.
61.174	35 CFR (1960) 24.59.
61.191	35 CFR (1960) 24.60.
61.192	35 CFR (1960) 24.61.
61.193	35 CFR (1960) 24.62.
61.194	35 CFR (1960) 24.63.
61.195	35 CFR (1960) 24.64.
61.196	35 CFR (1960) 24.65.
61.197	35 CFR (1960) 24.66.
61.198	35 CFR (1960) 24.67.
61.199	35 CFR (1960) 24.68.
61.200	35 CFR (1960) 24.69.
61.201	35 CFR (1960) 24.70.
61.202	35 CFR (1960) 24.71.
61.203	35 CFR (1960) 24.72.
61.204	35 CFR (1960) 24.73.
61.205	35 CFR (1960) 24.74.
61.206	35 CFR (1960) 24.75.
61.221	35 CFR (1960) 24.76.
61.222	35 CFR (1960) 24.77.
61.223	35 CFR (1960) 24.78.
61.224	35 CFR (1960) 24.79.
61.225	35 CFR (1960) 24.80.
61.226	35 CFR (1960) 24.81.
61.227	35 CFR (1960) 24.82.
61.228	35 CFR (1960) 24.83.
61.229	35 CFR (1960) 24.84.
61.230	35 CFR (1960) 24.85.
61.231	35 CFR (1960) 24.86.
61.241	35 CFR (1960) 24.87.
61.242	35 CFR (1960) 24.88.
61.243	35 CFR (1960) 24.89.
61.244	35 CFR (1960) 24.90.
61.245	35 CFR (1960) 24.91.
61.246	35 CFR (1960) 24.92.
61.247	35 CFR (1960) 24.96.
61.248	35 CFR (1960) 24.93a.
61.261	35 CFR (1960) 24.94.
61.262	35 CFR (1960) 24.95.
61.263	35 CFR (1960) 24.96.
61.264	35 CFR (1960) 24.97.
61.265	35 CFR (1960) 24.98.
61.266	35 CFR (1960) 24.99.
61.281	35 CFR (1960) 24.100.
61.282	35 CFR (1960) 24.100a.
61.283	35 CFR (1960) 24.100b.
61.284	35 CFR (1960) 24.100c.
61.285	35 CFR (1960) 24.100d.
61.286	35 CFR (1960) 24.100e.
61.287	35 CFR (1960) 24.100f.
61.288	35 CFR (1960) 24.101.
61.289	35 CFR (1960) 24.101a.
61.290	35 CFR (1960) 24.010b.
61.291	35 CFR (1960) 24.101c.
61.292	35 CFR (1960) 24.101d.
61.293	35 CFR (1960) 24.101e.
61.294	35 CFR (1960) 24.101f.
61.295	35 CFR (1960) 24.101g.
61.296	35 CFR (1960) 24.101h.
61.297	35 CFR (1960) 24.101i.
61.298	35 CFR (1960) 24.101j.
61.299	35 CFR (1960) 24.101k.
61.300	35 CFR (1960) 24.101*l*.
61.301	35 CFR (1960) 24.102.

Revised 35 CFR	Derivation
Sec.	
61.302	35 CFR (1960) 24.103.
61.311	35 CFR (1960) 24.200.
61.312	35 CFR (1960) 24.201.
61.313	35 CFR (1960) 24.202.
61.314	35 CFR (1960) 24.203.
61.315	35 CFR (1960) 24.204.
61.316	35 CFR (1960) 24.205.
61.317	35 CFR (1960) 24.206.
61.318	35 CFR (1960) 24.207.
61.319	35 CFR (1960) 24.208.
61.331	New.
61.332	New.
61.333	New.
61.334	New.
61.335	New.
61.351	C.Z.O. 21, Aug. 7, 1950, § 1.
61.352	C.Z.O. 21, Aug. 7, 1950, § 2.
61.353	E.R. 11, July 1, 1951, § 2; C.Z.O. 21, Aug. 7, 1950.
61.354	E.R. 11, July 1, 1951, § 3; C.Z.O. 21, Aug. 7, 1950, § 4.
61.355	C.Z.O. 21, Aug. 7, 1950, § 5.
61.356	C.Z.O. 21, Aug. 7, 1950, § 6.
61.357	C.Z.O. 21, Aug. 7, 1950, § 7.
61.358	E.R. 11, July 1, 1951, § 4; C.Z.O. 21, Aug. 8, 1950, § 8.
61.359	E.R. 11, July 1, 1951, § 7; C.Z.O. 21, Aug. 7, 1950, § 9.
61.360	C.Z.O. 21, Aug. 7, 1950, § 10.
61.361	C.Z.O. 21, Aug. 7, 1950, § 11.
61.362	C.Z.O. 21, Aug. 7, 1950, § 12.
61.363	E.R. 11, § 8; C.Z.O. 21, Aug. 7, 1950, § 13.
61.364	C.Z.O. 21, Aug. 7, 1950, § 4.
61.365	C.Z.O. 21, Aug. 7, 1950, § 16.
61.381	New.
63.1	35 CFR (1960) 26.1.
63.2	35 CFR (1960) 26.2.
63.3	35 CFR (1960) 26.3.
63.4	35 CFR (1960) 26.4.
63.5	35 CFR (1960) 26.5
63.6	35 CFR (1960) 26.6
63.7	35 CFR (1960) 26.7.
63.8	35 CFR (1960) 26.8.
63.9	35 CFR (1960) 26.9.
63.10	35 CFR (1960) 26.10, 26.11.
63.11	35 CFR (1960) 26.12.
63.12	35 CFR (1960) 26.13.
63.13	35 CFR (1960) 26.14.
65.1	35 CFR (1960) 16.1.
65.2	35 CFR (1960) 16.2
65.3	35 CFR (1960) 16.3.
65.4	35 CFR (1960) 16.4.
65.5	35 CFR (1960) 16.5.
65.6	35 CFR (1960) 16.6.
65.7	35 CFR (1960) 16.7.
65.51	35 CFR (1960) 16.11.
65.61	35 CFR (1960) 16.12.
65.62	35 CFR (1960) 16.13.
65.63	35 CFR (1960) 16.14.
65.71	35 CFR (1960) 16.15.
65.72	35 CFR (1960) 16.16.
65.73	Panama Canal Co. Comptroller's Circ. No. 44, Oct. 27, 1961, § 6.
65.81	C.Z. Health Director's Policy Memo. HL–2, May 4, 1964, § 1; 35 CFR (1960 comp.) 16.17.
65.82	C.Z. Health Director's Policy Memo. HL–2, May 4, 1964, § 2;35 CFR (1960 comp.) 16.17.

Revised 35 CFR	Derivation
Sec.	
65.83	C.Z. Health Director's Policy Memo. HL–2, May 4, 1964, § 3.
65.84	C.Z. Health Director's Policy Memo. HL–2, May 4, 1964, § 4.
65.85	C.Z. Health Director's Policy Memo. HL–2, May 4, 1964, § 5.
65.86	C.Z. Health Director's Policy Memo. HL–2, May 4, 1964, § 6.
65.87	C.Z. Health Director's Policy Memo. HL–2, May 4, 1964, § 7.
65.88	C.Z. Health Director's Policy Memo. HL–2, May 4, 1964, § 8.
65.89	C.Z. Health Director's Policy Memo. HL–2, May 4, 1964, § 9.
65.90	C.Z. Health Director's Policy Memo. HL–2, May 4, 1964, § 10.
65.91	C.Z. Health Director's Policy Memo. HL–2, May 4, 1964, § 11.
65.101	35 CFR (1960) 16.18.
65.102	35 CFR (1960) 16.19.
65.111	C.Z. Health Director's Policy Memo. HL–2, May 4, 1964, § 12.
65.112	C.Z. Health Director's Policy Memo. HL–2, May 4, 1964, § 14.
65.113	35 CFR (1960) 16.20.
67.1	C.Z. Post. Guide 1.11.
67.2	C.Z. Post. Guide 1.31.
67.3	C.Z. Post. Guide 53.11.
67.4	C.Z. Post. Guide 5.21, 5.22, 5.221.
67.5	C.Z. Post. Guide 5.231.
67.6	C.Z. Post. Guide 15.211, 15.222.
67.7	C.Z. Post. Guide 1.41.
67.8	C.Z. Post. Guide 1.42.
67.9	C.Z. Post. Guide 67.41.
67.10	C.Z. Post. Guide 2.211, 2.221, 2.231, 2.241, 2.51 to 2.53, 53.21.
67.11	C.Z. Post. Guide 2.261.
67.12	New.
67.13	New.
67.14	New.
67.31	C.Z. Post. Guide 30.1, 30.2.
67.41	C.Z. Post. Guide 30.31, 66.31.
67.42	C.Z. Post. Guide 30.32.
67.43	C.Z. Post. Guide 30.341.
67.44	C.Z. Post. Guide 30.342.
67.45	C.Z. Post. Guide 30.33, 30.331 to 30.334.
67.46	C.Z. Post. Guide 67.21, 67.22.
67.71	C.Z. Post. Guide 39.11, 39.12.
67.72	C.Z. Post. Guide 39.211.
67.73	C.Z. Post. Guide 39.212.
67.91	C.Z. Post. Guide 54.1.
67.92	C.Z. Post. Guide 54.2.
67.93	C.Z. Post. Guide 54.51, 54.52.
67.94	C.Z. Post. Guide 54.61.
67.95	C.Z. Post. Guide 54.62.
67.96	C.Z. Post. Guide 54.71.
67.111	C.Z. Post. Guide 55.11, 55.111, 55.112.
67.112	C.Z. Post. Guide 55.12.
67.113	C.Z. Post. Guide 55.13.
67.114	C.Z. Post. Guide 55.14.
67.115	C.Z. Post. Guide 55.15.
67.116	C.Z. Post. Guide 55.161.

Revised 35 CFR	Derivation
Sec.	
67.117	C.Z. Post. Guide 55.17.
67.118	C.Z. Post. Guide 55.21.
67.119	C.Z. Post. Guide 55.31, to 55.35.
67.120	C.Z. Post. Guide 55.41.
67.121	C.Z. Post. Guide 55.51.
67.131	C.Z. Post. Guide 56.11, 56.12, 56.21, 56.22, 56.32, 56.33, 56.41, 56.42, 56.421, 56.51 to 56.53, 56.61, 56.71, 56.81.
67.132	C.Z. Post. Guide 56.91.
67.141	C.Z. Post. Guide 57.11 to 57.15.
67.142	C.Z. Post. Guide 57.21 to 57.23.
67.143	C.Z. Post. Guide 57.3, 57.31, 57.32.
67.144	C.Z. Post. Guide 57.41.
67.145	C.Z. Post. Guide 57.51, 57.61.
67.146	C.Z. Post. Guide 57.71.
67.147	C.Z. Post. Guide 57.81, 57.82.
67.148	C.Z. Post. Guide 57.91.
67.161	C.Z. Post. Guide 58.12 to 58.16, 58.111, 58.112, 58.121, 58.122, 58.161, 58.162.
67.162	C.Z. Post. Guide 58.163.
67.163	C.Z. Post. Guide 58.21, 58.221 to 58.225, 58.231, 58.232, 58.241, 58.251, 58.253.
67.181	C.Z. Post. Guide 59.11, 59.17.
67.182	C.Z. Post. Guide 59.21, 59.23 to 59.25, 59.241, 59.261, 59.262.
67.183	C.Z. Post. Guide 59.31.
67.184	C.Z. Post. Guide 59.41 to 59.44.
67.201	C.Z. Post. Guide 60.11 to 60.15, 60.21.
67.211	C.Z. Post. Guide 61.1 to 61.5.
67.221	C.Z. Post. Guide 63.11.
67.222	C.Z. Post. Guide 63.12.
67.223	C.Z. Post. Guide 63.21 to 63.23.
67.224	C.Z. Post. Guide 63.31 to 63.33.
67.225	C.Z. Post. Guide 63.41.
67.226	C.Z. Post. Guide 63.51.
67.227	C.Z. Post. Guide 63.52.
67.228	C.Z. Post. Guide 63.53.
67.229	C.Z. Post. Guide 63.61.
67.230	C.Z. Post. Guide 63.71.
67.241	C.Z. Post. Guide 64.151.
67.242	C.Z. Post. Guide 64.152.
67.243	C.Z. Post. Guide 64.153.
67.244	C.Z. Post. Guide 64.154.
67.245	C.Z. Post. Guide 64.155.
67.261	C.Z. Post. Guide 64.141.
67.262	C.Z. Post. Guide 64.142, 64.143.
67.263	C.Z. Post. Guide 64.144.
67.272	C.Z. Post. Guide 64.131, 64.132.
67.273	C.Z. Post. Guide 64.133.
67.274	C.Z. Post. Guide 64.134.
67.281	C.Z. Post. Guide 65.11, 65.12, 65.121 to 65.124.
67.282	C.Z. Post. Guide 65.21, 65.24.
67.311	C.Z. Post. Guide 63.81.
67.312	C.Z. Post. Guide 63.82
67.313	C.Z. Post. Guide 63.83
67.314	C.Z. Post. Guide 63.84
67.315	C.Z. Post. Guide 63.85
67.316	C.Z. Post. Guide 63.86
67.317	C.Z. Post. Guide 63.87
67.318	C.Z. Post. Guide 63.88
67.331	C.Z. Post. Guide 63.91.
67.332	C.Z. Post. Guide 63.92.
67.333	C.Z. Post. Guide 63.93.
67.351	C.Z. Post. Guide 12.11, 12.12.

Revised 35 CFR	Derivation
Sec.	
67.352	C.Z. Post. Guide 12.21.
67.353	C.Z. Post. Guide 12.31.
67.354	C.Z. Post. Guide 12.41.
67.355	C.Z. Post. Guide 12.42.
67.356	C.Z. Post. Guide 12.431, 12.432.
67.357	C.Z. Post. Guide 12.51 to 12.56.
67.358	C.Z. Post. Guide 12.61 to 12.67.
67.359	C.Z. Post. Guide 12.71 to 12.73.
67.360	C.Z. Post. Guide 12.81, 12.82.
67.371	C.Z. Post. Guide 32.11.
67.372	C.Z. Post. Guide 32.21, 32.22.
67.373	C.Z. Post. Guide 32.31, 32.32, 32.35.
67.381	C.Z. Post. Guide 35.11 to 35.18, 35.21.
67.382	C.Z. Post. Guide 35.21 to 35.24.
67.383	C.Z. Post. Guide 35.31, 35.32.
67.384	C.Z. Post. Guide 35.41.
67.385	C.Z. Post. Guide 35.51.
67.386	C.Z. Post. Guide 35.52, 35.53.
67.387	C.Z. Post. Guide 35.54.
67.388	C.Z. Post. Guide 35.61.
67.389	C.Z. Post. Guide 35.71 to 35.73.
67.390	C.Z. Post. Guide 35.81.
67.401	C.Z. Post. Guide 42.11, 42.111 to 42.114.
67.411	C.Z. Post. Guide 66.11, 66.21 to 66.23, 66.41.
67.412	C.Z. Post. Guide 66.24.
67.413	C.Z. Post. Guide 66.25.
67.414	C.Z. Post. Guide 66.26.
67.415	C.Z. Post. Guide 66.27.
67.416	C.Z. Post. Guide 66.28.
67.417	C.Z. Post. Guide 66.511 to 66.516, 66.521, 66.522, 66.531, 66.541.
67.418	C.Z. Post. Guide 66.61.
67.419	C.Z. Post. Guide 66.71, 66.72.
67.420	C.Z. Post. Guide 66.81 to 66.84.
67.441	C.Z. Post. Guide 69.11, 69.112, 69.113.
67.442	C.Z. Post. Guide 69.121 to 69.125.
67.443	C.Z. Post. Guide 69.13, 69.131 to 69.137.
67.444	C.Z. Post. Guide 69.141 to 69.145.
67.451	C.Z. Post. Guide 69.21, 69.211, 69.212.
67.452	C.Z. Post. Guide 69.212.
67.461	C.Z. Post. Guide 69.31.
67.471	C.Z. Post. Guide 69.41, 69.411 to 69.414.
67.472	C.Z. Post. Guide 69.51.
67.481	C.Z. Post. Guide 69.61.
67.491	C.Z. Post. Guide 72.11.
67.492	C.Z. Post. Guide 72.11.
67.493	C.Z. Post. Guide 72.121 to 72.122.
67.494	C.Z. Post. Guide 72.131 to 72.135.
67.495	C.Z. Post. Guide 72.141, 72.142.
67.496	C.Z. Post. Guide 72.151, 72.152.
67.497	C.Z. Post. Guide 72.16.
67.498	C.Z. Post. Guide 72.171 to 72.173.
67.499	C.Z. Post. Guide 72.18.
67.511	C.Z. Post. Guide 72.21.
67.512	C.Z. Post. Guide 72.21.
67.521	C.Z. Post. Guide 72.31.
67.531	C.Z. Post. Guide 73.31.
67.532	C.Z. Post. Guide 73.32.
67.533	C.Z. Post. Guide 73.33.
67.541	C.Z. Post. Guide 73.11.
67.542	C.Z. Post. Guide 73.12.
67.543	C.Z. Post. Guide 73.13.
67.551	C.Z. Post. Guide 73.21 to 73.24.
67.552	C.Z. Post. Guide 73.23.

Revised 35 CFR	Derivation
Sec.	
67.561	C.Z. Post. Guide 71.11, 71.21, 71.31, 71.33, 71.44.
67.562	C.Z. Post. Guide 71.11.
67.563	C.Z. Post. Guide 71.41.
67.564	C.Z. Post. Guide 71.42.
67.565	C.Z. Post. Guide 71.43.
67.566	C.Z. Post. Guide 71.51.
67.567	C.Z. Post. Guide 71.52.
67.568	C.Z. Post. Guide 71.53.
67.591	C.Z. Post. Guide 62.1, 62.11, 62.12, 69.121.
67.592	C.Z. Post. Guide 69.21, 69.22.
67.593	C.Z. Post. Guide 62.311.
67.594	C.Z. Post. Guide 62.411, 62.421, 62.431, 62.441, 62.451.
67.595	C.Z. Post. Guide 62.51 to 62.56.
67.596	C.Z. Post. Guide 62.61.
67.597	C.Z. Post. Guide 62.71.
67.598	C.Z. Post. Guide 62.81.
67.621	C.Z. Post. Guide 36.11.
67.622	C.Z. Post. Guide 36.12.
67.623	C.Z. Post. Guide 36.121.
67.651	C.Z. Post. Guide 4.51.
67.652	C.Z. Post. Guide 4.53.
67.653	C.Z. Post. Guide 4.52.
67.671	C.Z. M.O. Sys. Book. 1.1.
67.672	C.Z. M.O. Sys. Book. 1.2.
67.673	C.Z. M.O. Sys. Book. 8.1.
67.681	C.Z. M.O. Sys. Book. 2.25.
67.682	C.Z. M.O. Sys. Book. 2.3, 2.31, 2.32.
67.683	C.Z. M.O. Sys. Book. 2.4, 2.41.
67.684	C.Z. M.O. Sys. Book. 2.5, 2.51, 2.53.
67.701	C.Z. M.O. Sys. Book. 3.1, 3.11 to 3.15, 3.151, 3.16, 3.161, 3.2, 3.21, 3.3, 3.31, 3.312, 3.32, 3.321 to 3.323.
67.702	C.Z. M.O. Sys. Book. 3.14, 3.4, 3.411.
67.703	C.Z. M.O. Sys. Book. 3.5, 3.511, 3.521 to 3.523.
67.704	C.Z. M.O. Sys. Book. 3.6, 3.61, 3.62, 3.621.
67.721	C.Z. M.O. Sys. Book. 4.1, 4.111, 4.12, 4.121 to 4.125.
67.722	C.Z. M.O. Sys. Book. 4.2 to 4.294.
67.723	C.Z. M.O. Sys. Book. 4.31, 4.311, 4.312, 4.32, 4.321, 4.322.
67.741	C.Z. M.O. Sys. Book. 6.11.
67.742	C.Z. M.O. Sys. Book. 6.21.
67.761	C.Z. M.O. Sys. Book. 7.1, 7.11, 7.12, 7.121.
67.762	C.Z. M.O. Sys. Book. 7.21 to 7.24.
67.763	C.Z. M.O. Sys. Book. 7.3, 7.31, 7.32.
67.764	C.Z. M.O. Sys. Book. 7.4, 7.41 to 7.43.
67.765	C.Z. M.O. Sys. Book. 7.5, 7.51, 7.52, 7.6, 7.61, 7.62.
67.766	C.Z. M.O. Sys. Book. 7.71.
67.791	C.Z. Post. Sav. Sys. Book. 1.2.
67.792	C.Z. Post. Sav. Sys. Book. 1.3.
67.793	C.Z. Post. Sav. Sys. Book. 1.4.
67.794	C.Z. Post. Sav. Sys. Book. 1.5.
67.811	C.Z. Post. Sav. Sys. Book. 2.25.
67.812	C.Z. Post. Sav. Sys. Book. 2.31, 2.32.
67.813	C.Z. Post. Sav. Sys. Book. 2.41.
67.814	C.Z. Post. Sav. Sys. Book. 2.51, 2.52.
67.831	C.Z. Post. Sav. Sys. Book. 3.111 to 3.113, 3.121, 3.131, 3.141.
67.832	C.Z. Post. Sav. Sys. Book. 3.211 to 3.213.
67.833	C.Z. Post. Sav. Sys. Book. 3.31, 3.32, 3.331, 3.332.
67.834	C.Z. Post. Sav. Sys. Book. 3.333.
67.835	C.Z. Post. Sav. Sys. Book. 3.334.
67.836	C.Z. Post. Sav. Sys. Book. 3.41 to 3.43, 3.421 to 3.423; 35 CFR (1960 Comp.) 17.1 to 17.3.
67.837	C.Z. Post. Sav. Sys. Book. 3.51, 3.511 to 3.518.
67.838	C.Z. Post. Sav. Sys. Book. 3.521 to 3.527; C.Z. Post. Guide 75.13.

Revised 35 CFR	Derivation
Sec.	
67.839	C.Z. Post. Sav. Sys. Book. 3.6.
67.840	C.Z. Post. Sav. Sys. Book. 5; C.Z. Post. Guide 75.12.
67.841	C.Z. Post. Guide. 75.14.
67.861	C.Z. Post. Sav. Sys. Book. 6.1.
67.852	C.Z. Post. Sav. Sys. Book. 6.2, 6.22, 6.23.
67.863	C.Z. Post. Sav. Sys. Book. 6.24.
67.864	C.Z. Post. Sav. Sys. Book. 6.31.
69.1	E.R. 53, Rev. No. 9, May 15, 1961, § 1.
69.2	E.R. 53, Rev. No. 9, May 15, 1961, § 2.
69.3	E.R. 53, Rev. No. 9, May 15, 1961, § 3.
69.11	E.R. 53, Rev. No. 9, May 15, 1961, § 4.
69.12	E.R. 53, Rev. No. 9, May 15, 1961, § 5.
69.13	E.R. 53, Rev. No. 9, May 15, 1961, § 6.
69.14	E.R. 53, Rev. No. 9, May 15, 1961, § 7.
69.21	E.R. 53, Rev. No. 9, May 15, 1961, § 7.
69.22	E.R. 53, Rev. No. 9, May 15, 1961, § 7.
69.23	E.R. 53, Rev. No. 9, May 15, 1961, § 7.
69.24	E.R. 53, Rev. No. 9, May 15, 1961, § 7.
69.31	E.R. 53, Rev. No. 9, May 15, 1961, § 7.
69.32	E.R. 53, Rev. No. 9, May 15, 1961, § 7.
69.33	E.R. 53, Rev. No. 9, May 15, 1961, § 7.
69.41	E.R. 53, Rev. No. 9, May 15, 1961, § 7.
69.42	E.R. 53, Rev. No. 9, May 15, 1961, § 7.
69.43	E.R. 53, Rev. No. 9, May 15, 1961, § 7.
69.44	E.R. 53, Rev. No. 9, May 15, 1961, § 7.
69.45	E.R. 53, Rev. No. 9, May 15, 1961, § 7.
69.46	E.R. 53, Rev. No. 9, May 15, 1961, § 7.
69.47	E.R. 53, Rev. No. 9, May 15, 1961, § 7.
69.61	E.R. 53, Rev. No. 9, May 15, 1961, § 7.
69.62	E.R. 53, Rev. No. 9, May 15, 1961, § 7.
69.63	E.R. 53, Rev. No. 9, May 15, 1961, § 9.
69.64	E.R. 53, Rev. No. 9, May 15, 1961, § 7.
69.81	E.R. 53, Rev. No. 9, May 15, 1961, § 7.
69.82	E.R. 53, Rev. No. 9, May 15, 1961, § 7.
69.83	E.R. 53, Rev. No. 9, May 15, 1961, § 7.
69.84	E.R. 53, Rev. No. 9, May 15, 1961, § 7.
69.85	E.R. 53, Rev. No. 9, May 15, 1961, § 7.
69.86	E.R. 53, Rev. No. 9, May 15, 1961, § 11.
69.87	E.R. 53, Rev. No. 9, May 15, 1961, § 11.
69.88	E.R. 53, Rev. No. 9, May 15, 1961, § 7.
69.111	E.R. 53, Rev. No. 9, May 15, 1961, § 7.
69.112	E.R. 53, Rev. No. 9, May 15, 1961, § 7.
69.113	E.R. 53, Rev. No. 9, May 15, 1961, § 7.
69.114	E.R. 53, Rev. No. 9, May 15, 1961, § 7.
69.115	E.R. 53, Rev. No. 9, May 15, 1961, § 7.
69.116	E.R. 53, Rev. No. 9, May 15, 1961, § 12.
69.117	E.R. 53, Rev. No. 9, May 15, 1961, § 9.
69.141	E.R. 53, Rev. No. 9, May 15, 1961, § 7.
69.142	E.R. 53, Rev. No. 9, May 15, 1961, § 7.
69.143	E.R. 53, Rev. No. 9, May 15, 1961, § 7.
69.144	E.R. 53, Rev. No. 9, May 15, 1961, § 7.
69.161	E.R. 53, Rev. No. 9, May 15, 1961, § 7.
69.162	E.R. 53, Rev. No. 9, May 15, 1961, § 7.
69.163	E.R. 53, Rev. No. 9, May 15, 1961, § 7.
69.171	E.R. 53, Rev. No. 9, May 15, 1961, § 7.
69.172	E.R. 53, Rev. No. 9, May 15, 1961, § 8.
69.173	E.R. 53, Rev. No. 9, May 15, 1961, § 8.
69.174	E.R. 53, Rev. No. 9, May 15, 1961, § 8.
69.175	E.R. 53, Rev. No. 9, May 15, 1961, § 8.
69.176	E.R. 53, Rev. No. 9, May 15, 1961, § 8.
69.177	E.R. 53, Rev. No. 9, May 15, 1961, § 8.
69.178	E.R. 53, Rev. No. 9, May 15, 1961, § 8.
69.179	E.R. 53, Rev. No. 9, May 15, 1961, § 7.
69.180	E.R. 53, Rev. No. 9, May 15, 1961, § 7.

Revised 35 CFR	Derivation
Sec.	
69.181	E.R. 53, Rev. No. 9, May 15, 1961, § 8.
69.182	E.R. 53, Rev. No. 9, May 15, 1961, §§ 7, 8.
69.191	E.R. 53, Rev. No. 9, May 15, 1961, § 9.
69.192	E.R. 53, Rev. No. 9, May 15, 1961, § 9.
69.193	E.R. 53, Rev. No. 9, May 15, 1961, § 9.
69.211	E.R. 53, Rev. No. 9, May 15, 1961, § 10.
69.212	E.R. 53, Rev. No. 9, May 15, 1961, § 10.
69.213	E.R. 53, Rev. No. 9, May 15, 1961, § 10.
69.221	E.R. 53, Rev. No. 9, May 15, 1961, § 12.
69.222	E.R. 53, Rev. No. 9, May 15, 1961, § 12.
69.223	E.R. 53, Rev. No. 9, May 15, 1961, § 12.
69.224	E.R. 53, Rev. No. 9, May 15, 1961, § 12.
69.231	E.R. 53, Rev. No. 9, May 15, 1961, § 10.
69.232	E.R. 53, Rev. No. 9, May 15, 1961, § 14.
69.233	E.R. 53, Rev. No. 9, May 15, 1961, § 13.
69.301	35 CFR (1960) 24.1.
69.302	35 CFR (1960) 24.2.
69.303	35 CFR (1960) 24.3.
69.304	35 CFR (1960) 24.4.
69.305	35 CFR (1960) 24.5.
69.306	35 CFR (1960) 24.6.
69.307	35 CFR (1960) 24.7.
69.308	35 CFR (1960) 24.8.
69.309	35 CFR (1960) 24.9.
69.310	35 CFR (1960) 24.10.
69.311	35 CFR (1960) 24.11.
69.312	35 CFR (1960) 24.12.
69.313	35 CFR (1960) 24.13, 24.14.
69.314	35 CFR (1960) 24.14.
101.1	Nav. Reg. 19.4.
101.2	35 CFR (1960) 4.12.
101.3	35 CFR (1960) 4.13.
101.4	35 CFR (1960) 4.14.
101.5	35 CFR (1960) 4.15.
101.6	35 CFR (1960) 4.16.
101.7	35 CFR (1960) 4.17.
101.8	35 CFR (1960) 4.18.
101.9	35 CFR (1960) 4.19.
101.10	35 CFR (1960) 4.20.
101.11	35 CFR (1960) 4.20a.
101.12	35 CFR (1960) 4.20b.
101.13	35 CFR (1960) 4.21.
101.14	New.
103.1	New.
103.2	35 CFR (1960) 4.2.
103.3	35 CFR (1960) 4.302.
103.4	35 CFR (1960) 4.3.
103.5	35 CFR (1960) 4.4.
103.6	35 CFR (1960) 4.5.
103.7	35 CFR (1960) 4.6.
103.8	35 CFR (1960) 4.7.
103.9	35 CFR (1960) 4.8.
103.10	35 CFR (1960) 4.8a.
103.11	35 CFR (1960) 4.8b.
103.12	35 CFR (1960) 4.9
103.13	35 CFR (1960) 4.10.
103.14	35 CFR (1960) 4.28.
103.15	35 CFR (1960) 4.37.
103.16	35 CFR (1960) 4.43b.
103.17	35 CFR (1960) 4.44.
103.18	35 CFR (1960) 4.44a.
103.19	35 CFR (1960) 4.44b.
103.20	35 CFR (1960) 4.45.
103.21	35 CFR (1960) 4.139.

Revised 35 CFR	Derivation
Sec.	
103.22	35 CFR (1960) 4.46.
103.23	35 CFR (1960) 4.47.
103.24	35 CFR (1960) 4.47a.
103.25	35 CFR (1960) 4.156.
103.26	35 CFR (1960) 4.10f.
103.27	35 CFR (1960) 4.10a.
103.28	35 CFR (1960) 4.10b.
103.29	35 CFR (1960) 4.10c.
103.30	35 CFR (1960) 4.10d.
103.31	35 CFR (1960) 4.10e.
103.32	New.
103.33	35 CFR (1960) 4.10g.
103.34	35 CFR (1960) 4.10h.
103.35	Nav. Reg. 19.4.
103.36	Nav. Reg. 19.5.
103.37	Nav. Reg. 19.6.
103.38	Nav. Reg. 19.7.
103.39	Nav. Reg. 19.12.
103.40	Nav. Reg. 19.8.
103.41	Nav. Reg. 19.10.
103.42	New.
105.1	35 CFR (1960) 4.22.
105.2	35 CFR (1960) 4.23.
105.3	35 CFR (1960) 4.25.
105.4	35 CFR (1960) 4.24.
105.5	35 CFR (1960) 4.26.
105.6	35 CFR (1960) 4.27.
105.7	New.
107.1	35 CFR (1960) 4.28.
107.2	35 CFR (1960) 4.34.
107.3	35 CFR (1960) 4.31.
107.4	35 CFR (1960) 4.32.
107.5	35 CFR (1960) 4.33.
107.6	35 CFR (1960) 4.35.
107.7	New.
109.1	35 CFR (1960) 4.36.
109.2	35 CFR (1960) 4.38.
109.3	35 CFR (1960) 4.39.
109.4	35 CFR (1960) 4.40.
109.5	35 CFR (1960) 4.41.
109.6	35 CFR (1960) 4.42.
109.7	35 CFR (1960) 4.43a.
109.8	New.
111.1	35 CFR (1960) 4.201.
111.2	35 CFR (1960) 4.202.
111.3	35 CFR (1960) 4.283.
111.4	35 CFR (1960) 4.303.
111.41	35 CFR (1960) 4.210.
111.42	35 CFR (1960) 4.211.
111.43	35 CFR (1960) 4.212.
111.44	35 CFR (1960) 4.213.
111.45	35 CFR (1960) 4.214.
111.46	35 CFR (1960) 4.215.
111.47	35 CFR (1960) 4.216.
111.48	35 CFR (1960) 4.217.
111.49	35 CFR (1960) 4.218.
111.50	35 CFR (1960) 4.219.
111.51	35 CFR (1960) 4.220.
111.52	35 CFR (1960) 4.221.
111.53	35 CFR (1960) 4.222.
111.54	35 CFR (1960) 4.223.
111.55	35 CFR (1960) 4.224.
111.56	35 CFR (1960) 4.225.
111.57	35 CFR (1960) 4.226.

Revised 35 CFR	Derivation
Sec.	
111.58	35 CFR (1960) 4.227.
111.59	35 CFR (1960) 4.228.
111.60	35 CFR (1960) 4.229.
111.61	35 CFR (1960) 4.230.
111.62	35 CFR (1960) 4.231.
111.63	35 CFR (1960) 4.232.
111.64	35 CFR (1960) 4.233.
111.65	35 CFR (1960) 4.234.
111.101	35 CFR (1960) 4.250.
111.102	35 CFR (1960) 4.251.
111.103	35 CFR (1960) 4.252.
111.141	35 CFR (1960) 4.260.
111.142	35 CFR (1960) 4.261.
111.143	35 CFR (1960) 4.262.
111.144	35 CFR (1960) 4.263.
111.145	35 CFR (1960) 4.264.
111.146	35 CFR (1960) 4.265.
111.147	35 CFR (1960) 4.266.
111.148	35 CFR (1960) 4.267.
111.149	35 CFR (1960) 4.268.
111.150	35 CFR (1960) 4.269.
111.151	35 CFR (1960) 4.270.
111.152	35 CFR (1960) 4.271.
111.153	35 CFR (1960) 4.272.
111.154	35 CFR (1960) 4.273.
111.155	35 CFR (1960) 4.274.
111.156	35 CFR (1960) 4.275.
111.157	35 CFR (1960) 4.276.
111.158	35 CFR (1960) 4.277.
111.159	35 CFR (1960) 4.278.
111.160	35 CFR (1960) 4.279.
111.161	35 CFR (1960) 4.280.
111.162	35 CFR (1960) 4.282.
111.163	35 CFR (1960) 4.306.
111.201	35 CFR (1960) 4.300.
111.202	35 CFR (1960) 4.301.
111.203	35 CFR (1960) 4.304.
111.204	35 CFR (1960) 4.305.
111.205	35 CFR (1960) 4.307.
111.206	35 CFR (1960) 4.308.
111.221	New.
113.1	35 CFR (1960) 4.106.
113.2	35 CFR (1960) 4.107.
113.3	35 CFR (1960) 4.108.
113.4	35 CFR (1960) 4.109.
113.5	35 CFR (1960) 4.110.
113.6	35 CFR (1960) 4.111.
113.7	35 CFR (1960) 4.112.
113.8	35 CFR (1960) 4.113.
113.9	35 CFR (1960) 4.114.
113.10	35 CFR (1960) 4.115.
113.11	New.
113.41	35 CFR (1960) 4.115a.
113.42	35 CFR (1960) 4.115b.
113.43	35 CFR (1960) 4.115c.
113.44	35 CFR (1960) 4.115d.
113.45	35 CFR (1960) 4.115e.
113.46	35 CFR (1960) 4.115f.
113.47	35 CFR (1960) 4.115g.
113.48	35 CFR (1960) 4.115h.
113.49	35 CFR (1960) 4.115i.
113.50	35 CFR (1960) 4.115j.
113.51	35 CFR (1960) 4.115k.
113.52	35 CFR (1960) 4.115*l*.

Revised 35 CFR	Derivation
Sec.	
113.53	35 CFR (1960) 4.115m.
113.54	35 CFR (1960) 4.115n.
113.55	35 CFR (1960) 4.115*o* .
113.91	35 CFR (1960) 4.116.
113.92	35 CFR (1960) 4.116a.
113.93	35 CFR (1960) 4.116b.
113.94	35 CFR (1960) 4.116c.
113.95	35 CFR (1960) 4.116d.
113.96	35 CFR (1960) 4.117.
113.97	35 CFR (1960) 4.117a
113.98	35 CFR (1960) 4.117b.
113.99	35 CFR (1960) 4.117c.
113.100	35 CFR (1960) 4.118.
113.101	35 CFR (1960) 4.118a.
113.102	35 CFR (1960) 4.118b.
113.103	35 CFR (1960) 4.118c.
113.104	35 CFR (1960) 4.119.
113.105	35 CFR (1960) 4.119a.
113.106	35 CFR (1960) 4.119b.
113.107	35 CFR (1960) 4.119c.
113.108	35 CFR (1960) 4.120.
113.109	35 CFR (1960) 4.120a.
113.110	35 CFR (1960) 4.120b.
113.111	35 CFR (1960) 4.120c.
113.112	35 CFR (1960) 4.121.
113.113	35 CFR (1960) 4.121a.
113.114	35 CFR (1960) 4.121b.
113.115	35 CFR (1960) 4.121c.
113.116	35 CFR (1960) 4.122.
113.117	35 CFR (1960) 4.122a.
113.118	35 CFR (1960) 4.122b.
113.119	35 CFR (1960) 4.123.
113.120	35 CFR (1960) 4.123a.
113.121	35 CFR (1960) 4.123b.
113.122	35 CFR (1960) 4.124.
113.123	35 CFR (1960) 4.124a.
113.124	35 CFR (1960) 4.124b.
113.125	35 CFR (1960) 4.125.
113.126	35 CFR (1960) 4.125a.
113.127	35 CFR (1960) 4.126.
113.161	35 CFR (1960) 4.127.
113.162	35 CFR (1960) 4.128.
113.163	35 CFR (1960) 4.129.
113.181	New.
115.1	35 CFR (1960) 12.1, 12.2a.
115.2	35 CFR (1960) 12.2.
115.3	35 CFR (1960) 12.3.
115.4	35 CFR (1960) 12.4
115.5	35 CFR (1960) 12.5
115.6	Nav. Reg. 10.12 (E.O. 4314, Sept. 25, 1925, rule 156).
115.7	35 CFR (1960) 12.10.
117.1	35 CFR (1960) 4.133, 12.6.
117.2	35 CFR (1960) 12.7.
117.3	35 CFR (1960) 4.133, 12.8, 12.9.
117.4	35 CFR (1960) 12.11.
117.5	35 CFR (1960) 4.136.
117.6	35 CFR (1960) 4.138.
117.7	New.
119.1	35 CFR (1960) 4.157.
119.2	35 CFR (1960) 4.158.
119.3	35 CFR (1960) 4.160.
119.4	35 CFR (1960) 4.158.
119.5	35 CFR (1960) 4.159.
119.6	35 CFR (1960) 4.159.

Revised 35 CFR	Derivation
Sec.	
119.7	Nav. Reg. 10.17.
119.8	Nav. Reg. 10.19.
119.9	Nav. Reg. 10.20.
119.10	Nav. Reg. 10.22.
119.11	Nav. Reg. 10.23.
119.12	Nav. Reg. 10.24.
119.13	Nav. Reg. 10.21.
119.14	Nav. Reg. 10.18.
119.15	Nav. Reg. 10.24.
119.16	Nav. Reg. 10.25.
119.17	Nav. Reg. 10.26.
119.18	Nav. Reg. 10.27.
119.19	Nav. Reg. 10.70.
119.20	Nav. Reg. 10.28.
119.21	Nav. Reg. 10.29.
119.22	Nav. Reg. 10.30.
119.23	Nav. Reg. 10.31.
119.24	Nav. Reg. 10.32.
119.25	Nav. Reg. 10.33.
119.26	Nav. Reg. 10.35.
119.61	Nav. Reg. 10.39.
119.62	Nav. Reg. 10.40.
119.63	Nav. Reg. 10.41.
119.64	Nav. Reg. 10.42.
119.101	Nav. Reg. 10.49.
119.102	Nav. Reg. 10.49a.
119.141	Nav. Reg. 10.50.
119.142	Nav. Reg. 10.51.
119.143	Nav. Reg. 10.52.
119.144	Nav. Reg. 10.53.
119.181	Gov. Reg., June 30, 1960 (Nav. Reg. 10.53a).
119.182	Gov. Reg., June 30, 1960 (Nav. Reg. 1053b).
119.183	Nav. Reg. 10.54.
119.184	Nav. Reg. 10.54a.
119.185	Nav. Reg. 10.54b.
119.186	Nav. Reg. 10.55.
119.187	New.
119.221	Nav. Reg. 10.56.
119.222	Nav. Reg. 10.58.
119.223	Nav. Reg. 10.59.
119.224	Nav. Reg. 10.60.
119.225	Nav. Reg. 10.61.
119.226	Nav. Reg. 10.62.
119.227	Nav. Reg. 10.63.
119.228	Nav. Reg. 10.64.
119.229	Nav. Reg. 10.65.
119.230	Nav. Reg. 10.66.
119.231	Nav. Reg. 10.67.
119.232	Nav. Reg. 10.68.
119.233	Nav. Reg. 10.69.
119.251	New.
121.1	Nav. Reg. 10.71.
121.2	Nav. Reg. 10.136.
121.3	Nav. Reg. 10.146.
121.41	Nav. Reg. 10.142.
121.42	Nav. Reg. 10.143.
121.43	Nav. Reg. 10.144.
121.44	Nav. Reg. 10.72.
121.45	Nav. Reg. 10.73.
121.46	Nav. Reg. 10.72a.
121.47	Nav. Reg. 10.74.
121.48	Nav. Reg. 10.75.
121.49	Nav. Reg. 10.76.
121.50	Nav. Reg. 10.77.

Revised 35 CFR	Derivation
Sec.	
121.51	Nav. Reg. 10.78.
121.52	Nav. Reg. 10.79.
121.53	Nav. Reg. 10.80.
121.54	Nav. Reg. 10.81.
121.55	Nav. Reg. 10.82.
121.56	Nav. Reg. 10.83.
121.57	Nav. Reg. 10.84.
121.58	Nav. Reg. 10.85.
121.59	Nav. Reg. 10.86.
121.60	Nav. Reg. 10.87.
121.61	Nav. Reg. 10.88.
121.62	Nav. Reg. 10.89.
121.63	Nav. Reg. 10.90.
121.64	Nav. Reg. 10.91, 10.92.
121.65	Nav. Reg. 10.93.
121.66	Nav. Reg. 10.94.
121.67	Nav. Reg. 10.95.
121.68	Nav. Reg. 10.96.
121.69	Nav. Reg. 10.97.
121.70	Nav. Reg. 10.98.
121.71	Nav. Reg. 10.99.
121.72	Nav. Reg. 10.100.
121.73	Nav. Reg. 10.101.
121.74	Nav. Reg. 10.102.
121.75	Nav. Reg. 10.103.
121.76	Nav. Reg. 10.104.
121.77	Nav. Reg. 10.105.
121.78	Nav. Reg. 10.106.
121.79	Nav. Reg. 10.107.
121.80	Nav. Reg. 10.108.
121.81	Nav. Reg. 10.109.
121.82	Nav. Reg. 10.110.
121.83	Nav. Reg. 10.111.
121.84	Nav. Reg. 10.112.
121.85	Nav. Reg. 10.113.
121.86	Nav. Reg. 10.114.
121.87	Nav. Reg. 10.115.
121.88	Nav. Reg. 10.116.
121.89	Nav. Reg. 10.117.
121.90	Nav. Reg. 10.118.
121.91	Nav. Reg. 10.119.
121.92	Nav. Reg. 10.120.
121.93	Nav. Reg. 10.121.
121.94	Nav. Reg. 10.122.
121.95	Nav. Reg. 10.123.
121.96	Nav. Reg. 10.124.
121.97	Nav. Reg. 10.125.
121.98	Nav. Reg. 10.126.
121.99	Nav. Reg. 10.127.
121.100	Nav. Reg. 10.128.
121.101	Nav. Reg. 10.129.
121.102	Nav. Reg. 10.130.
121.103	Nav. Reg. 10.131.
121.104	Nav. Reg. 10.132
121.105	Nav. Reg. 10.133.
121.106	Nav. Reg. 10.134.
121.107	Nav. Reg. 10.135.
121.108	Nav. Reg. 10.145.
121.131	Nav. Reg. 10.137.
121.132	Nav. Reg. 10.138.
121.133	Nav. Reg. 10.139.
121.134	Nav. Reg. 10.140.
121.171	New.
121.172	Nav. Reg. 10.141.

Revised 35 CFR	Derivation
Sec.	
121.173	New.
121.174	New.
121.191	New.
123.1	35 CFR (1960) 4.141a.
123.2	35 CFR (1960) 4.141h.
123.3	35 CFR (1960) 4.141c, 4.14.6
123.4	35 CFR (1960) 4.142.
123.5	35 CFR (1960) 4.145.
123.6	35 CFR (1960) 4.143, 4.144.
123.7	New.
123.8	35 CFR (1960) 4.149.
123.9	35 CFR (1960) 4.150.
123.10	35 CFR (1960) 4.142a.
123.11	35 CFR (1960) 4.151.
123.12	New.
125.1	35 CFR (1960) 4.152.
125.2	35 CFR (1960) 4.153.
125.3	35 CFR (1960) 4.154.
125.4	35 CFR (1960) 4.155.
125.5	New.
127.1	35 CFR (1960) 25.1
127.2	35 CFR (1960) 25.3.
127.3	35 CFR (1960) 25.4.
127.4	35 CFR (1960) 25.5.
127.5	35 CFR (1960) 25.6.
127.6	35 CFR (1960) 25.7.
127.7	35 CFR (1960) 25.8.
127.8	35 CFR (1960) 25.9.
127.9	New.
129.1	35 CFR (1960) 19.2.
129.2	35 CFR (1960) 19.5.
129.3	35 CFR (1960) 19.10.
129.4	35 CFR (1960) 19.12.
129.5	35 CFR (1960) 19.13.
129.6	35 CFR (1960) 19.16.
129.41	35 CFR (1960) 19.20.
129.42	35 CFR (1960) 19.22.
129.43	35 CFR (1960) 19.24.
129.81	35 CFR (1960) 19.26.
129.82	35 CFR (1960) 19.28.
129.121	35 CFR (1960) 19.32.
129.122	35 CFR (1960) 19.34.
129.161	35 CFR (1960) 19.36.
131.1	35 CFR (1960) 4.162.
131.2	35 CFR (1960) 4.164.
131.3	35 CFR (1960) 4.165.
131.4	35 CFR (1960) 4.166.
131.5	35 CFR (1960) 4.167.
131.6	35 CFR (1960) 4.168.
131.7	35 CFR (1960) 4.169.
131.8	35 CFR (1960) 4.170.
131.9	35 CFR (1960) 4.171.
131.10	35 CFR (1960) 4.172.
131.11	35 CFR (1960) 4.173.
131.12	35 CFR (1960) 4.174.
131.13	35 CFR (1960) 4.176.
133.1	35 CFR (1960) 27.1.
133.31	35 CFR (1960) 27.2; E.O. 4314, rule 14, Sept. 25, 1925.
133.32	35 CFR (1960) 27.3; E.O. 4314, rule 15, Sept. 25, 1925.
133.33	35 CFR (1960) 27.4.
133.34	35 CFR (1960) 27.5; E.O. 4314, rule 16, Sept. 25, 1925.
133.35	35 CFR (1960) 27.6.
133.36	35 CFR (1960) 27.7.
133.37	35 CFR (1960) 27.8.

Revised 35 CFR	Derivation
Sec.	
133.71	Nav. Reg. 11.10; Res. P.C. Co. Bd. of Dir., Oct. 9, 1954.
133.72	Nav. Reg. 11.11; Res. P.C. Co. Bd. of Dir., Oct. 9, 1954.
133.73	Nav. Reg. 11.12; Res. P.C. Co. Bd. of Dir., Oct. 9, 1954.
133.74	Nav. Reg. 11.13; Res. P.C. Co. Bd. of Dir., Oct. 9, 1954.
133.75	Nav. Reg. 11.14; Res. P.C. Co. Bd. of Dir., Oct. 9, 1954.
135.1	35 CFR (1960) 27.17.
135.2	35 CFR (1960) 27.18.
135.3	35 CFR (1960) 27.19.
135.41	35 CFR (1960) 27.20.
135.42	35 CFR (1960) 27.21.
135.61	35 CFR (1960) 27.22.
135.62	35 CFR (1960) 27.23.
135.63	35 CFR (1960) 27.24.
135.81	35 CFR (1960) 27.25.
135.82	35 CFR (1960) 27.26.
135.83	35 CFR (1960) 27.27.
135.84	35 CFR (1960) 27.28.
135.85	35 CFR (1960) 27.29.
135.86	35 CFR (1960) 27.30.
135.87	35 CFR (1960) 27.31.
135.88	35 CFR (1960) 27.32.
135.111	35 CFR (1960) 27.33.
135.112	35 CFR (1960) 27.34.
135.141	35 CFR (1960) 27.35.
135.142	35 CFR (1960) 27.36.
135.171	35 CFR (1960) 27.37.
135.172	35 CFR (1960) 27.38.
135.173	35 CFR (1960) 27.39.
135.174	35 CFR (1960) 27.40.
135.175	35 CFR (1960) 27.41.
135.176	35 CFR (1960) 27.42.
135.177	35 CFR (1960) 27.43.
135.178	35 CFR (1960) 27.44.
135.179	35 CFR (1960) 27.45.
135.180	35 CFR (1960) 27.46.
135.181	35 CFR (1960) 27.47.
135.182	35 CFR (1960) 27.48.
135.211	35 CFR (1960) 27.49.
135.212	35 CFR (1960) 27.50.
135.213	35 CFR (1960) 27.51.
135.241	35 CFR (1960) 27.52.
135.271	35 CFR (1960) 27.53.
135.272	35 CFR (1960) 27.54.
135.273	35 CFR (1960) 27.55.
135.274	35 CFR (1960) 27.56.
135.275	35 CFR (1960) 27.57.
135.276	35 CFR (1960) 27.58.
135.277	35 CFR (1960) 27.59.
135.278	35 CFR (1960) 27.60.
135.279	35 CFR (1960) 27.61.
135.280	35 CFR (1960) 27.62.
135.281	35 CFR (1960) 27.63.
135.282	35 CFR (1960) 27.64.
135.283	35 CFR (1960) 27.65.
135.284	35 CFR (1960) 27.66.
135.285	35 CFR (1960) 27.67.
135.286	35 CFR (1960) 27.68.
135.287	35 CFR (1960) 27.69.

Revised 35 CFR	Derivation
Sec.	
135.321	35 CFR (1960) 27.70.
135.322	35 CFR (1960) 27.71.
135.323	35 CFR (1960) 27.72.
135.324	35 CFR (1960) 27.73.
135.325	35 CFR (1960) 27.74.
135.326	35 CFR (1960) 27.75.
135.327	35 CFR (1960) 27.76.
135.351	35 CFR (1960) 27.77.
135.352	35 CFR (1960) 27.78.
135.353	35 CFR (1960) 27.79.
135.354	35 CFR (1960) 27.80.
135.381	35 CFR (1960) 27.81.
135.382	35 CFR (1960) 27.82.
135.383	35 CFR (1960) 27.83.
135.411	35 CFR (1960) 27.84.
135.412	35 CFR (1960) 27.85.
135.441	35 CFR (1960) 27.86.
135.442	35 CFR (1960) 27.87.
135.443	35 CFR (1960) 27.88.
135.481	35 CFR (1960) 27.89.
135.482	35 CFR (1960) 27.90.
135.483	35 CFR (1960) 27.91.
135.484	35 CFR (1960) 27.92.
135.485	35 CFR (1960) 27.93.
135.486	35 CFR (1960) 27.94.
135.511	35 CFR (1960) 27.95.
201.1	E.O. 7676, §1, Sept. 26, 1937.
201.2	E.O. 7676, §§2, 3, July 26, 1937.
201.3	E.O. 7676, §8, July 26, 1937.
201.4	E.O. 7676, §10, July 26, 1937.
201.5	E.O. 7676, §§11, 12, July 26, 1937.
201.6	E.O. 7676, §12a, as added E.O. 8962, §2, Dec. 6, 1941.
251.1	E.O.11171, §1, Aug. 18, 1964.
251.2	E.O.11171, §2, Aug. 18, 1964.
251.21	E.O.11171, §3, Aug. 18, 1964.
251.22	E.O.11171, §3, Aug. 18, 1964.
251.23	E.O.11171, §3, Aug. 18, 1964.
251.41	E.O.11171, §4, Aug. 18, 1964.
251.42	E.O.11171, §4, Aug. 18, 1964.
253.1	5 CFR (1964) 1201.1.
253.2	5 CFR (1964) 1201.2.
253.3	5 CFR (1964) 1201.3.
253.4	5 CFR (1964) 1201.4.
253.5	5 CFR (1964) 1201.5.
253.6	5 CFR (1964) 1201.6.
253.7	5 CFR (1964) 1201.7.
253.8	5 CFR (1964) 1201.100.[1]
253.31	5 CFR (1964) 1202.1.
253.32	5 CFR (1964) 1202.2.
253.33	5 CFR (1964) 1202.3.
253.34	5 CFR (1964) 1202.4.
253.35	5 CFR (1964) 1202.5.
253.36	5 CFR (1964) 1202.6.
253.37	5 CFR (1964) 1202.7.
253.38	5 CFR (1964) 1202.8.
253.39	5 CFR (1964) 1202.9.
253.40	5 CFR (1964) 1202.10.
253.41	5 CFR (1964) 1202.11.
253.42	5 CFR (1964) 1202.12.
253.43	5 CFR (1964) 1202.13.
253.44	5 CFR (1964) 1202.14.[2]
253.45	5 CFR (1964) 1202.15.[3]
253.46	5 CFR (1964) 1202.16.
253.71	5 CFR (1964) 1203.1.

Revised 35 CFR	Derivation
Sec.	
253.72	New.
253.73	New.
253.74	5 CFR (1964) 1203.4.
253.75	New.
253.101	5 CFR (1964) 1204.1.
253.102	5 CFR (1964) 1204.2.
253.111	New.
253.112	5 CFR (1964) 1204.4.
253.113	5 CFR (1964) 1204.5.
253.114	5 CFR (1964) 1204.7.
253.131	New.
253.132	5 CFR (1964) 1204.9.
253.133	New.
253.134	5 CFR (1964) 1204.11.
253.135	5 CFR (1964) 1204.12.[4]
253.151	5 CFR (1964) 1204.13.
253.152	5 CFR (1964) 1204.14.
253.153	5 CFR (1964) 1204.15.
253.154	5 CFR (1964) 1204.16.
253.155	5 CFR (1964) 1204.17.
253.156	5 CFR (1964) 1204.18.
253.181	New.
253.201	5 CFR (1964) 1206.1.
253.221	5 CFR (1964) 1207.1.
253.241	5 CFR (1964) 1208.1.
253.242	5 CFR (1964) 1208.2.
253.261	5 CFR (1964) 1209.1.
253.262	New.
253.263	5 CFR (1964) 1209.3.
253.264	5 CFR (1964) 1209.4.
253.265	5 CFR (1964) 1209.5.
253.266	5 CFR (1964) 1209.5.
253.267	5 CFR (1964) 1209.5.
253.291	5 CFR (1964) 1210.1.
253.292	5 CFR (1964) 1210.2.

[1] As last amended at 30 F.R. 14007, Nov. 5, 1965.
[2] As last amended at 30 F.R. 14007, Nov. 5, 1965.
[3] As last amended at 30 F.R. 14007, Nov. 5, 1965.
[4] As last amended at 30 F.R. 14965, Dec. 3, 1965.

Table 2—CODE OF FEDERAL REGULATIONS

Showing where sections of Title 5, CFR, and Title 35, CFR, 1960, including the supplements thereto, have been carried into this revision of 35 CFR.

5 CFR (1964)	Revised 35 CFR
Sec.	*Sec.*
1201.1	253.1.
1201.2	253.2.
1201.3	253.3.
1201.4	253.4.
1201.5	253.5.
1201.6	253.6.
1201.7	253.7.
1201.100[1]	253.8.
1202.1	253.31.
1202.2	253.32.

5 CFR (1964)	Revised 35 CFR
Sec.	*Sec.*
1202.3	253.33.
1202.4	253.34.
1202.5	253.35.
1202.6	253.36.
1202.7	253.37.
1202.8	253.38.
1202.9	253.39.
1202.10	253.40.
1202.11	253.41.
1202.12	253.42.
1202.13	253.43.
1202.14[2]	253.44.
1202.15[3]	253.45.
1202.16	253.46.
1203.1	253.71.
1203.2	253.72.
1203.3	253.73.
1203.4	253.74.
1203.5	253.75.
1204.1	253.101.
1204.2	253.104.
1204.3	253.111.
1204.4	253.112.
1204.5	253.113.
1204.7	253.114.
1204.8	253.131.
1204.9	253.132.
1204.10	253.133.
1204.11	253.134.
1204.12[4]	253.135.
1204.13	253.151.
1204.14	253.152.
1204.15	253.153.
1204.16	253.154.
1204.17	253.155.
1204.18	253.156.
1205.1	253.181.
1206.1	253.201.
1207.1	253.221.
1208.1	253.241.
1208.2	253.242.
1209.1	253.261.
1209.2	253.262.
1209.3	253.262.
1209.4	253.264.
1209.5	253.265 to 235.267.
1210.1	253.291.
1210.2	253.292.

[1] As last amended at 30 F.R. 14007, Nov. 5, 1965.
[2] As last amended at 30 F.R. 14007, Nov. 5, 1965.
[3] As last amended at 30 F.R. 14007, Nov. 5, 1965.
[4] As last amended at 30 F.R. 14965, Dec. 3, 1965.

35 CFR (1960)	Revised 35 CFR
Sec.	*Sec.*
1.1	1.1
1.2	1.2.
1.3	3.22.
1.4	See Table 12.
4.1	101.14, 103.42, 105.7, 107.7, 109.8, 113.181, 117.7, 119.251, 123.12, 125.5.

35 CFR (1960)	Revised 35 CFR
Sec.	*Sec.*
4.2	103.2.
4.3	103.4.
4.4	103.5.
4.5	103.6.
4.6	103.7.
4.7	103.8.
4.8	103.9.
4.8a	103.10.
4.8b	103.11.
4.9	103.12.
4.10	103.13.
4.10a	103.27.
4.10b	103.28.
4.10c	103.29.
4.10d	103.30.
4.10e	103.31.
4.10f	103.26.
4.10g	103.33.
4.10h	103.34.
4.11	See 3.1 et seq.
4.12	101.2.
4.13	101.3.
4.14	101.4.
4.15	101.5.
4.16	101.6.
4.17	101.7.
4.18	101.8.
4.19	101.9.
4.20	101.10.
4.20a	101.11.
4.20b	101.12.
4.21	101.13.
4.21a	59.86.
4.22	105.1.
4.23	105.2.
4.24	105.4.
4.25	105.3.
4.26	105.5.
4.27	105.6.
4.28	103.14, 107.1.
4.30a	59.83, 59.84.
4.30b	59.85.
4.31	107.3.
4.32	107.4.
4.33	107.5.
4.34	107.2.
4.35	107.6.
4.36	109.1.
4.37	103.15.
4.38	109.2.
4.39	109.3.
4.40	109.4.
4.41	109.5.
4.42	109.6.
4.43a	109.7.
4.43b	109.16.
4.44	109.17.
4.44a	109.18.
4.44b	109.19.
4.45	109.20.
4.46	109.22.
4.47	109.23.
4.47a	109.24.
4.406	113.1.

35 CFR (1960)	Revised 35 CFR
Sec.	*Sec.*
4.107	113.2.
4.108	113.3.
4.109	113.4.
4.110	113.5.
4.111	113.6.
4.112	113.7.
4.113	113.8.
4.114	113.9.
4.115	113.10.
4.115a	113.41.
4.115b	113.42.
4.115c	113.43.
4.115d	113.44.
4.115e	113.45.
4.115f	113.46.
4.115g	113.47.
4.115h	113.48.
4.115i	113.49.
4.115j	113.50.
4.115k	113.51.
4.115*l*	113.52.
4.115m	113.53.
4.115n	113.54.
4.115*o*	113.55.
4.116	113.91.
4.116a	113.92.
4.116b	113.93.
4.116c	113.94.
4.116d	113.95.
4.117	113.96.
4.117a	113.97.
4.117b	113.98.
4.117c	113.99.
4.118	113.100.
4.118a	113.101.
4.118b	113.102.
4.118c	113.103.
4.119	113.104.
4.119a	113.105.
4.119b	113.106.
4.119c	113.107.
4.120	113.108.
4.120a	113.109.
4.120b	113.110.
4.120c	113.111.
4.121	113.112.
4.121a	113.113.
4.121b	113.114.
4.121c	113.115.
4.122	113.116.
4.122a	113.117.
4.122b	113.118.
4.123	113.119.
4.123a	113.120
4.123b	113.121.
4.124.	113.122.
4.124a	113.123.
4.124b	113.124.
4.125	113.125.
4.125a	113.126.
4.126	113.127.
4.127	113.161.
4.128	113.162.
4.129	113.163.

35 CFR (1960)	Revised 35 CFR
Sec.	*Sec.*
4.133	117., 117.3.
4.136	117.5.
4.136a	Omitted. See § 113.104(c).
4.137	Omitted. See 6 C.Z.C. §§ 1184, 1591.
4.138	117.6.
4.139	103.21.
4.140	Omitted.
4.141a	123.1.
4.141b	123.2.
4.141c	123.3.
4.142	123.4.
4.142a	123.10.
4.143	123.6.
4.144	123.6.
4.145	123.5.
4.146	123.3.
4.148	123.7.
4.149	123.8.
4.150	123.9.
4.151	123.11.
4.152	125.1.
4.153	125.2.
4.154	125.3.
4.155	125.4.
4.156	103.25.
4.157	119.1.
4.158	119.2, 119.4.
4.159	119.5, 119.6.
4.160	119.3.
4.161	Omitted.
4.162	131.1.
4.163	131.1.
4.164	131.2.
4.165	131.3.
4.166	131.4.
4.167	131.5.
4.168	131.6.
4.169	131.7.
4.170	131.8.
4.171	131.9.
4.172	131.10.
4.173	131.11.
4.174	131.12.
4.175	See Table 12.
4.176	131.13.
4.201	111.1.
4.202	111.2.
4.210	111.41.
4.211	111.42.
4.212	111.43.
4.213	111.44.
4.214	111.45.
4.215	111.46.
4.216	111.47.
4.217	111.48.
4.218	111.49.
4.219	111.50.
4.220	111.51.
4.221	111.52.
4.222	111.53.
4.223	111.54.
4.224	111.55.
4.225	111.56.
4.226	111.57.

35 CFR (1960)	Revised 35 CFR
Sec.	*Sec.*
4.227	111.58.
4.228	111.59.
4.229	111.60.
4.230	111.61.
4.231	111.62.
4.232	111.63.
4.233	111.64.
4.234	111.65.
4.250	111.101.
4.251	111.102.
4.252	111.103.
4.260	111.141.
4.261	111.142
4.262	111.143.
4.263	111.144.
4.264	111.145.
4.265	111.146.
4.266	111.147.
4.267	111.148.
4.268	111.149.
4.269	111.150.
4.270	111.151.
4.271	111.152.
4.272	111.153.
4.273	111.154.
4.274	111.155.
4.275	111.156.
4.276	111.157.
4.277	111.158.
4.278	111.159.
4.279	111.160.
4.280	111.161.
4.281	Omitted.
4.282	111.162.
4.283	111.3.
4.300	111.201.
4.301	111.202.
4.302	103.3.
4.303	111.4.
4.304	111.203.
4.305	111.204.
4.306	111.163.
4.307	111.205.
4.308	111.206.
5.1	51.1.
5.2	51.2.
5.3	51.3.
5.11	51.21.
5.12	51.22.
5.21	51.31.
5.22	51.32.
5.23	51.33.
5.31	51.41.
5.32	51.42.
5.33	51.43.
5.34	51.44.
5.35	51.45.
5.36	51.46.
5.37	51.47.
5.41	51.61.
5.42	51.62.
5.51	51.71.
5.61	51.81.
5.101	51.121.

35 CFR (1960)	Revised 35 CFR
Sec.	*Sec.*
5.102	51.122.
5.103	51.123.
5.104	51.124.
6.1	53.1.
6.2	53.2.
6.3	53.3.
6.4	53.4.
6.5	53.5.
6.6	53.6.
6.7	53.7.
6.8	53.8.
6.9	53.9.
6.10	53.10.
6.11	53.11
9.1	57.1.
9.2	57.2.
9.3	57.3.
9.4	57.4.
9.5	57.5.
9.6	57.6.
9.7	57.8.
9.8	57.14.
9.10	Omitted.
9.11	57.7.
9.12	57.15.
9.14	57.10.
9.15	57.11.
9.16	57.12.
9.17	57.13.
9.18	57.18.
10.1	59.1.
10.2	59.2.
10.3	59.21 to 59.23, 59.28.
10.4	59.21, 59.24, 59.25.
10.5	59.26.
10.6	59.27.
10.7	59.51.
10.8	59.52.
10.9	59.53, 59.54.
10.10	59.56.
10.11	59.57.
10.12	59.51.
10.13	59.52.
10.14	59.53.
10.15	59.54.
10.16	59.54.
10.17	59.55.
10.18	59.59.
10.19	59.60.
10.20	59.61.
10.21	59.62.
10.22	59.81.
10.23	59.82.
10.24	59.87.
10.25	59.58.
10.26	59.88.
10.27	59.131.
10.28.	59.131.
10.29	59.132.
10.30	59.132.
10.31	59.133.
10.32	59.134.
10.33	59.134.
10.34	59.111.

35 CFR (1960)	Revised 35 CFR
Sec.	*Sec.*
10.35	59.111.
10.35a	59.112.
10.36	59.113.
10.37	59.114.
10.38	59.4.
10.39	59.3.
10.40	59.135.
12.1	115.1.
12.2	115.2.
12.2a	115.1.
12.3	115.3.
12.4	115.4.
12.5	115.5.
12.6	117.1.
12.7	117.2.
12.8	117.3.
12.9	117.3.
12.10	115.7.
12.11	117.4.
16.1	65.1
16.2	65.2
16.3	65.3.
16.4	65.4.
16.5	65.5.
16.6	65.6.
16.7	65.7.
16.11	65.51.
16.12	65.61.
16.13	65.62.
16.14	65.63.
16.15	65.71.
16.16	65.72.
16.17	65.81, 65.82.
16.18	65.101.
16.19	65.102.
16.20	65.113.
16.21	Omitted. See 65.7.
17.1	67.836.
17.2	67.836.
17.3	67.836.
17.4	Omitted as executed.
19.1	Omitted. See 1.1.
19.2	129.1.
19.5	129.2.
19.10	129.3.
19.12	129.4.
19.13	129.5.
19.16	129.6.
19.20	129.41.
19.22	129.42.
19.24	120.43.
19.26	129.81.
19.28	129.82.
19.32	129.121.
19.34	129.122.
19.36	129.161.
21.1	5.1.
21.3	5.21 to 5.31, 5.61, 5.62, 5.81 to 5.83.
21.4	5.41 to 5.49, 5.81 to 5.83.
21.5	5.2.
24.1	69.301.
24.2	69.302.
24.3	69.303.
24.4	69.304.

35 CFR (1960)	Revised 35 CFR
Sec.	*Sec.*
24.5	69.305.
24.6	69.306.
24.7	69.307.
24.8	69.308.
24.9	69.309.
24.10	69.310.
24.11	69.311.
24.12	69.312.
24.13	69.313.
24.14	69.313.
24.37	61.121.
24.38	61.122.
24.39	61.123.
24.40	61.124.
24.41	61.125.
24.42	61.126.
24.43	61.127.
24.44	61.128.
24.45	61.129.
24.46	61.130.
24.47	61.131.
24.48	61.141.
24.49	61.142.
24.50	61.151.
24.51	61.152.
24.52	61.153.
24.53	61.154.
24.54	61.155.
24.54a	61.156.
24.55	61.157.
24.55a	61.158.
24.56	61.171.
24.57	61.172.
24.58	61.173.
24.59	61.174.
24.60	61.191.
24.61	61.192.
24.62	61.193.
24.63	61.194.
24.64	61.195.
24.65	61.196.
24.66	61.197.
24.67	61.198.
24.68	61.199.
24.69	61.200.
24.70	61.201.
24.71	61.202.
24.72	61.203.
24.73	61.204.
24.74	61.205.
24.75	61.206.
24.76	61.221.
24.77	61.222.
24.78	61.223.
24.79	61.224.
24.80	61.225.
24.81	61.226.
24.82	61.227.
24.83	61.228.
24.84	61.229.
24.85	61.230.
24.86	61.231.
24.87	61.241.
24.88	61.242.

35 CFR (1960)	Revised 35 CFR
Sec.	*Sec.*
24.89	61.243.
24.90	61.244.
24.91	61.245.
24.92	61.246.
24.93	61.247.
24.93a	61.248.
24.94	61.261.
24.95	61.262.
24.96	61.263.
24.97	61.264.
24.98	61.265.
24.99	61.266.
24.100	61.281.
24.100a	61.282.
24.100b	61.283.
24.100c	61.284.
24.100d	61.285.
24.100e	61.286.
24.100f	61.287.
24.101	61.288.
24.101a	61.289.
24.101b	61.290.
24.101c	61.291.
24.101d	61.292.
24.101e	61.293.
24.101f	61.294.
24.101g	61.295.
24.101h	61.296.
24.101i	61.297.
24.101j	61.298.
24.101k	61.299.
24.101*l*	61.300.
24.102	61.301.
24.103	61.302.
24.150	61.1 to 61.5.
24.160	61.31 to 61.33.
24.161	61.34, 61.35.
24.162	61.37.
24.163	61.39.
24.170	61.61.
24.171	61.62.
24.172	61.63.
24.173	61.64.
24.174	61.65.
24.175	61.66.
24.176	61.67.
24.177	61.68.
24.178	61.69.
24.179	61.70.
24.190	61.91.
24.191	61.92.
24.192	61.93.
24.193	61.94.
24.194	61.95.
24.195	61.96.
24.196	Omitted as executed and obsolete.
24.200	61.311.
24.201	61.312.
24.202	61.313.
24.203	61.314.
24.204	61.315.
24.205	61.316.
24.206	61.317.
24.207	61.318.

35 CFR (1960)	Revised 35 CFR
Sec.	*Sec.*
24.208	61.319.
25.1	127.1.
25.3	127.2.
25.4	127.3.
25.5	127.4.
25.6	127.5.
25.7	127.6.
25.8	127.7.
25.9	127.8.
26.1	63.1.
26.2	63.2.
26.3	63.3.
26.4	63.4.
26.5	63.5.
26.6	63.6.
26.7	63.7.
26.8	63.8.
26.9	63.9.
26.10	63.10.
26.11	63.10.
26.12	63.11.
26.13	63.12.
26.14	63.13.
27.1	133.1.
27.2	133.31.
27.3	133.32.
27.4	133.33.
27.5	133.34.
27.6	133.35.
27.7	133.36.
27.8	133.37.
27.17	135.1.
27.18	135.2.
27.19	135.3.
27.20	135.41.
27.21	135.42.
27.22	135.61.
27.23	135.62.
27.24	135.63.
27.25	135.81.
27.26	135.82.
27.27	135.83.
27.28	135.84.
27.29	135.85.
27.30	135.86.
27.31	135.87.
27.32	135.88.
27.33	135.111.
27.34	135.112.
27.35	135.141.
27.36	135.142.
27.37	135.171.
27.38	135.172.
27.39	135.173.
27.40	135.174.
27.41	135.175.
27.42	135.176.
27.43	135.177.
27.44	135.178.
27.45	135.179.
27.46	135.180.
27.47	135.181.
27.48	135.182.
27.49	135.211.

35 CFR (1960)	Revised 35 CFR
Sec.	*Sec.*
27.50	135.212.
27.51	135.213.
27.52	135.241.
27.53	135.271.
27.54	135.272.
27.55	135.273.
27.56	135.274.
27.57	135.275.
27.58	135.276.
27.59	135.277.
27.60	135.278.
27.61	135.279.
27.62	135.280.
27.63	135.281.
27.64	135.282.
27.65	135.283.
27.66	135.284.
27.67	135.285.
27.68	135.286.
27.69	135.287.
27.70	135.321.
27.71	135.322.
27.72	135.323.
27.73	135.324.
27.74	135.325.
27.75	135.326.
27.76	135.327.
27.77	135.351.
27.78	135.352.
27.79	135.353.
27.80	135.354.
27.81	135.381.
27.82	135.382.
27.83	135.383.
27.84	135.411.
27.85	135.412.
27.86	135.441.
27.87	135.442.
27.88	135.443.
27.89	135.481.
27.90	135.482.
27.91	135.483.
27.92	135.484.
27.93	135.485.
27.94	135.486.
27.95	135.511.

Table 3—EXECUTIVE ORDERS

Showing where executive orders of the President of the United States, not previously codified in CFR, have been carried into, or codified in, this revision of 35 CFR. Except as otherwise noted, the orders, as such, were repealed by one or another of the documents promulgating the regulations set out in this revision.

Exec. Ord. No.	Date	Section	Revised 35 CFR
2825	Mar. 25, 1918		5.31.
3130	July 25, 1919		5.21.
3352	Nov. 6, 1920		5.31.
4314, rule 156	Sept. 25, 1925		115.6.
5185	Sept. 6, 1929		5.43.
7676	July 26, 1937	[1] 1	201.1.
7676	July 26, 1937	[2] 2, 3	1.3, 201.2.
7676	July 26, 1937	[3] 4	1.4.
7676	July 26, 1937	[4] 8	201.3.
7676	July 26, 1937	10	201.4.
7676	July 26, 1937	11, 12	201.5.
7676		[5] 12a	201.6.
7979	Sept. 26, 1938		5.22.
8515 [6]	Aug. 13, 1940		5.2.
8962, § 2	Dec. 6, 1941		201.6.
9434	Apr. 8, 1944		5.46.
9746		1	3.2.
9746	July 1, 1946	2	3.21.
9746	July 1, 1946	3	3.1.
9746	July 1, 1946	4	3.1.
9746		6	3.3.
10595	Feb. 7, 1955		3.1 to 3.3, 3.21.
11171 [7]	Aug. 18, 1964	1–4	Part 251.

[1] But this section not repealed.
[2] But sections 2 and 3 not repealed.
[3] But this section and sections 5–7 of this order not repealed.
[4] But this section and section 9 of this order not repealed.
[5] As added by E.O. No. 8962, § 2, Dec. 6, 1941.
[6] But this order not repealed.
[7] But this order not repealed.

Table 4—PROCLAMATIONS

Showing where proclamations of the President of the United States have been carried into, or codified in, this revision of 35 CFR. The proclamations were not repealed by any of the documents promulgating the regulations set out in this revision, and remain in full force and effect.

Proc. No.	Date	Revised 35 CFR
1371 (part)	May 23, 1917	131.1 to 131.13.
2247	Aug. 25, 1937	133.1.
2248	Aug. 27, 1937	135.1 to 135.511.
2249	Aug. 31, 1937	133.1.

Table 5—CANAL ZONE ORDERS

Showing where Canal Zone orders of the Secretary of War and Secretary of the Army, not previously codified in CFR, have been carried into this revision of 35 CFR. These orders were repealed, as such, by one or another of the documents promulgating the regulations set out in this revision.

C.Z.O. No.	Date	Section	Revised 35 CFR
7	Mar. 31, 1947	.....	5.23.
9	June 6, 1947	.....	5.44.
10	Aug. 7, 1950	10	61.360.
12	Mar. 9, 1948	.....	5.49.
13	Apr. 21, 1948	.....	5.41.
14	July 15, 1948	.....	5.45.
18	Sept. 14, 1949	.....	5.27.
21	Aug. 7, 1950	1	61.351.
21	Aug. 7, 1950	2	61.352.
21	Aug. 7, 1950	3	61.353.
21	Aug. 7, 1950	4	61.354, 61.364.
21	Aug. 7, 1950	5	61.355.
21	Aug. 7, 1950	6	61.356.
21	Aug. 7, 1950	7	61.357.
21	Aug. 7, 1950	8	61.358.
21	Aug. 7, 1950	9	61.359.
21	Aug. 7, 1950	11	61.361.
21	Aug. 7, 1950	12	61.362.
21	Aug. 7, 1950	13	61.363.
21	Aug. 7, 1950	16	61.365.
23	May 18, 1951	.....	5.24.
28	Aug. 11, 1952	.....	5.29, 5.62.
29	Sept. 26, 1952	.....	5.24 to 5.26, 5.61, 5.81.
33	Apr. 16, 1954	.....	5.25.
34	Sept. 18, 1954	.....	5.48, 5.49.
44	Sept. 7, 1956	.....	5.47.
47	July 9, 1957	.....	5.48.
48	Dec. 4, 1957	.....	5.27.
53	Jan. 20, 1960	.....	5.26, 5.61, 5.81.
54	Aug. 22, 1960	.....	5.28, 5.30, 5.42.
56	Aug. 24, 1961	.....	5.24, 5.25, 5.61, 5.81.
65	June 18, 1963	.....	5.71.

Table 6—NAVIGATION REGULATIONS

Showing where provisions of certain navigation regulations, not contained in 35 CFR (1960), but contained in ''Rules and Regulations Governing Navigation of the Panama Canal and Adjacent Waters'', 1952 edition, as amended and supplemented, and as expanded in 1957 (chapter 10), have been carried into this revision of 35 CFR.

Navigation Regulations	Revised 35 CFR
Sec.	*Sec.*
10.12	115.6.
10.17	119.7.

Navigation Regulations	Revised 35 CFR
Sec.	*Sec.*
10.18	119.14.
10.19	119.8.
10.20	119.9.
10.21	119.13.
10.22	119.10.
10.23	119.11.
10.24	119.12, 119.15.
10.25	119.16.
10.26	119.17.
10.27	119.18.
10.28	119.20.
10.29	119.21.
10.30	119.22.
10.31	119.23.
10.32	119.24.
10.33	119.25.
10.34	119.5.
10.35	119.26.
10.39	119.61.
10.40	119.62.
10.41	119.63.
10.42	119.64.
10.49	119.101.
10.49a	119.102.
10.50	119.141.
10.51	119.142.
10.52	119.143.
10.53	119.44.
10.53a	119.181.
10.53b	119.182.
10.54	119.183.
10.54a	119.184.
10.54b	119.185.
10.55	119.186.
10.56	119.221.
10.57	Omitted.
10.58	119.222.
10.59	119.223.
10.60	119.224.
10.61	119.225
10.62	119.226.
10.63	119.227.
10.64	119.228.
10.65	119.229.
10.66	119.230.
10.67	119.231.
10.68	119.232.
10.69	119.233.
10.70	119.19.
10.71	121.1.
10.72	121.44.
10.72a	121.46.
10.73	121.45.
10.74	121.47.
10.75	121.48.
10.76	121.49.
10.77	121.50.
10.78	121.51.
10.79	121.52.
10.80	121.53.
10.81	121.54.
10.82	121.55.
10.83	121.56.
10.84	121.57.

Navigation Regulations	Revised 35 CFR
Sec.	*Sec.*
10.85	121.58.
10.86	121.59.
10.87	121.60.
10.88	121.61.
10.89	121.62.
10.90	121.63.
10.91	121.64.
10.92	121.64.
10.93	121.65.
10.94	121.66.
10.95	121.67.
10.96	121.68.
10.97	121.69.
10.98	121.70.
10.99	121.71.
10.100	121.72.
10.101	121.73.
10.102	121.74.
10.103	121.75.
10.104	121.76.
10.105	121.77.
10.106	121.78.
10.107	121.79.
10.108	121.80.
10.109	121.81.
10.110	121.82.
10.111	121.83.
10.112	121.84.
10.113	121.85.
10.114	121.86.
10.115	121.87.
10.116	121.88.
10.117	121.89.
10.118	121.90.
10.119	121.91.
10.120	121.92.
10.121	121.93.
10.122	121.94.
10.123	121.95.
10.124	121.96.
10.125	121.97.
10.126	121.98.
10.127	121.99.
10.128	121.100.
10.129	121.101.
10.130	121.102.
10.131	121.103.
10.132	121.104.
10.133	121.105.
10.134	121.106.
10.135	121.107.
10.136	121.2.
10.137	121.131.
10.138	121.132.
10.139	121.133.
10.140	121.134.
10.141	121.172.
10.142	121.41.
10.143	121.42.
10.144	121.43.
10.145	121.108.
10.146	121.3.
11.10	133.71.
11.11	133.72.

Navigation Regulations	Revised 35 CFR
Sec.	*Sec.*
11.12	133.73.
11.13	133.74.
11.14	133.75.
19.4	101.1, 103.35.
19.5	103.36.
19.6	103.37.
19.7	103.38.
19.8	103.40.
19.9	Omitted.
19.10	103.41.
19.11	Omitted.
19.12	103.39.

Table 7—EXECUTIVE REGULATIONS

Showing where executive regulations of the Governor of the Canal Zone, not previously codified in CFR, have been carried into this revision of 35 CFR.

E.R. No.	Revision No.	Date	Section	Revised 35 CFR
11	.....	July 1, 1951	2	61.353.
11	.....	July 1, 1951	3	61.354.
11	.....	July 1, 1951	4	61.358.
11	.....	July 1, 1951	7	61.359.
11	.....	.....	8	61.363.
31	2	Aug. 1, 1962	.....	3.23.
53	9	May 15, 1961	1	69.1.
53	9	May 15, 1961	2	69.2.
53	9	May 15, 1961	3	69.3.
53	9	May 15, 1961	4	69.11.
53	9	May 15, 1961	5	69.12.
53	9	May 15, 1961	6	69.13.
53	9	May 15, 1961	7	69.14, 69.21 to 69.24, 69.31 to 69.33, 69.41 to 69.47, 69.61, 69.62, 69.64, 69.81, 69.82, 69.84, 69.85, 69.88, 69.111 to 69.115, 69.141 to 69.144, 69.161 to 69.163, 69.179, 69.180, 69.182.
53	9	May 15, 1961	8	69.171 to 69.178, 69.181, 69.182.
53	9	May 15, 1961	9	69.63, 69.117, 69.191 to 69.193.
53	9	May 15, 1961	10	69.211 to 69.213, 69.231.
53	9	May 15, 1961	11	69.86, 69.87.
53	9	May 15, 1961	12	69.116, 69.221 to 69.224.
53	9	May 15, 1961	13	69.233.
53	9	May 15, 1961	14	69.232.

Table 8—CANAL ZONE OFFICIAL POSTAL GUIDE

Showing where sections of the Canal Zone Official Postal Guide have been carried into, and codified in, revised 35 CFR.

C.Z. Offic. Post. Guide	Revised 35 CFR
Sec.	*Sec.*
1.11	67.1.
1.31	67.2.
1.41	67.7.
1.42	67.8.
2.211	67.10.
2.221	67.10.
2.231	67.10.
2.241	67.10.
2.251	67.10.
2.252	67.10.
2.253	67.10.
2.261	67.11.
4.51	67.651.
4.52	67.653.
4.53	67.652.
5.21	67.4.
5.22	67.4.
5.221	67.4.
5.231	67.5.
12.11	67.351.
12.12	67.351.
12.21	67.352.
12.31	67.353.
12.41	67.354.
12.42	67.355.
12.431	67.356.
12.432	67.356.
12.51	67.357.
12.53	67.357.
12.54	67.357.
12.55	67.357.
12.56	67.357.
12.61	67.358.
12.62	67.358.
12.63	67.358.
12.64	67.358.
12.65	67.358.
12.66	67.358.
12.67	67.358.
12.71	67.359.
12.72	67.359.
12.73	67.359.
12.81	67.360.
12.82	67.360.
15.211	67.6.
15.222	67.6.
30.1	67.31.
30.2	67.31.
30.31	67.41.
30.32	67.42.
30.33	67.45.
30.331	67.45.
30.332	67.45.

C.Z. Offic. Post. Guide	Revised 35 CFR
Sec.	*Sec.*
30.333	67.45.
30.334	67.45.
30.341	67.43.
30.342	67.44.
32.11	67.371.
32.21	67.372.
32.22	67.372.
32.31	67.373.
32.32	67.373.
32.35	67.373.
35.11	67.381.
35.15	67.381.
35.17	67.381.
35.21	67.382.
35.24	67.382.
35.32	67.383.
35.41	67.384.
35.51	67.385.
35.52	67.386.
35.53	67.386.
35.54	67.387.
35.61	67.388.
35.71	67.389.
35.72	67.389.
35.73	67.389.
35.81	67.390.
36.11	67.621.
36.12	67.622.
36.121	67.623.
39.11	67.71.
39.12	67.71.
39.211	67.72.
39.212	67.73.
42.11	67.401.
42.111	67.401.
42.112	67.401.
42.113	67.401.
42.114	67.401.
42.12	67.401.
53.11	67.3.
53.21	67.10.
54.1	67.91.
54.2	67.92.
54.51	67.93.
54.52	67.93.
54.61	67.94.
54.62	67.95.
54.71	67.96.
55.11	67.111.
55.111	67.111.
55.112	67.111.
55.12	67.112.
55.13	67.113.
55.14	67.114.
55.15	67.115.
55.161	67.116.
55.17	67.117.
55.21	67.118.
55.31	67.119.
55.32	67.119.
55.33	67.119.
55.34	67.119.
55.35	67.119.

Sec.	*Sec.*
55.41	67.120.
55.51	67.121.
56.11	67.131.
56.12	67.131.
56.21	67.131.
56.22	67.131.
56.32	67.131.
56.33	67.131.
56.41	67.131.
56.42	67.131.
56.421	67.131.
56.51	67.131.
56.52	67.131.
56.53	67.131.
56.61	67.131.
56.71	67.131.
56.81	67.131.
56.91	67.132.
57.11	67.141.
57.12	67.141.
57.13	67.141.
57.14	67.141.
57.15	67.141.
57.21	67.142.
57.22	67.142.
57.23	67.142.
57.3	67.143.
57.31	67.143.
57.32	67.143.
57.41	67.144.
57.51	67.145.
57.61	67.145.
57.71	67.146.
57.81	67.147.
57.82	67.147.
57.91	67.148.
58.111	67.161.
58.112	67.161.
58.12	67.161.
58.121	67.161.
58.122	67.161.
58.13	67.161.
58.14	67.161.
58.15	67.161.
58.16	67.161.
58.161	67.161.
58.162	67.161.
58.163	67.162.
58.21	67.163.
58.221	67.163.
58.222	67.163.
58.223	67.163.
58.224	67.163.
58.225	67.163.
58.231	67.163.
58.232	67.163.
58.241	67.163.
58.251	67.163.
58.252	67.163.
58.253	67.163.
59.11	67.181.
59.17	67.181.
59.21	67.182.

C.Z. Offic. Post. Guide	Revised 35 CFR
Sec.	*Sec.*
59.23	67.182.
59.24	67.182.
59.241	67.182.
59.25	67.182.
59.261	67.182.
59.262	67.182.
59.31	67.183.
59.41	67.184.
59.42	67.184.
59.43	67.184.
59.44	67.184
60.11	67.201.
60.12	67.201.
60.13	67.201.
60.14	67.201.
60.15	67.201
60.21	67.201.
61.1	67.211.
61.2	67.211.
61.3	67.211.
61.4	67.211.
61.5	67.211.
62.1	67.591.
62.11	67.591.
62.12	67.591.
62.121	67.591.
62.21	67.592.
62.22	67.592.
62.31	67.593.
62.411	67.594.
62.421	67.594.
62.431	67.594.
62.441	67.594.
62.451	67.594.
62.51	67.595.
62.52	67.595.
62.53	67.595.
62.54	67.595.
62.55	67.595.
62.56	67.595.
62.61	67.596.
62.71	67.597.
62.81	67.598.
63.11	67.221.
63.12	67.222.
63.21	67.223.
63.22	67.223.
63.23	67.223.
63.31	67.224.
63.32	67.224.
63.33	67.224.
63.41	67.225.
63.51	67.226.
63.52	67.227.
63.53	67.228.
63.61	67.229.
63.71	67.230.
63.81	67.311.
63.82	67.312.
63.83	67.313.
63.84	67.314.
63.85	67.315.
63.86	67.316.

C.Z. Offic. Post. Guide	Revised 35 CFR
Sec.	*Sec.*
63.87	67.317.
63.88	67.318.
63.91	67.331.
63.92	67.332.
63.93	67.333.
64.131	67.272.
64.132	67.272.
64.133	67.273.
64.134	67.274.
64.141	67.261.
64.142	67.262.
64.143	67.262.
64.144	67.263.
64.151	67.241.
64.152	67.242.
64.153	67.243.
64.154	67.244.
64.155	67.245.
65.11	67.281.
65.12	67.281.
65.121	67.281.
65.122	67.281.
65.123	67.281.
65.124	67.281.
65.21	67.282.
64.24	67.282.
66.11	67.411.
66.21	67.411.
66.22	67.411.
66.23	67.411.
66.24	67.412.
66.25	67.413.
66.27	67.415.
66.28	67.416.
66.31	67.411.
66.41	67.411.
66.511	67.417.
66.512	67.417.
66.513	67.417.
66.514	67.417.
66.515	67.417.
66.516	67.417.
66.521	67.417.
66.522	67.417.
66.531	67.417.
66.541	67.417.
66.61	67.418.
66.71	67.419.
66.72	67.419.
66.81	67.420.
66.82	67.420.
66.83	67.420.
66.84	67.420.
67.21	67.46.
67.22	67.46.
67.381	35.12 to 35.18, 35.21.
67.382	35.22, 35.23.
67.383	35.31.
67.41	67.9.
67.414	67.414.
69.11	67.441.
69.111	67.441.
69.112	67.441.

C.Z. Offic. Post. Guide	Revised 35 CFR
Sec.	*Sec.*
69.113	67.441.
69.121	67.442.
69.122	67.442.
69.123	67.442.
69.124	67.442.
69.125	67.442.
69.13	67.443.
69.131	67.443.
69.132	67.443.
69.133	67.443.
69.134	67.443.
69.135	67.443.
69.136	67.443.
69.137	67.443.
69.141	67.444.
69.142	67.444.
69.143	67.444.
69.144	67.444.
69.145	67.444.
69.21	67.451.
69.211	67.451.
69.212	67.451, 67.452.
69.31	67.461.
69.41	67.471.
69.411	67.471.
69.412	67.471.
69.413	67.471.
69.414	67.471.
69.51	67.472.
69.61	67.481.
71.11	67.561, 67.562.
71.21	67.561.
71.31	67.561.
71.33	67.561.
71.41	67.563.
71.42	67.564.
71.43	67.565.
71.44	67.561.
71.51	67.566.
71.52	67.567.
71.53	67.568.
72.11	67.491, 67.492.
72.32	67.561.
72.121	67.493.
72.122	67.493.
72.123	67.493.
72.131	67.494.
72.132	67.494.
72.133	67.494.
72.142	67.495.
72.151	67.496.
72.152	67.496.
72.171	67.498.
72.172	67.498.
72.173	67.498.
72.134	67.494.
72.135	67.494.
72.141	67.495.
72.16	67.497.
72.18	67.499.
72.21	67.511, 67.512.
72.31	67.521.
73.11	67.541.

C.Z. Offic. Post. Guide	Revised 35 CFR
Sec.	*Sec.*
73.12	67.542.
73.13	67.543.
73.21	67.551.
73.22	67.551.
73.23	67.551, 67.552.
73.24	67.551.
73.31	67.531.
73.32	67.532.
73.33	67.533.
75.12	67.840.
75.13	67.838.
75.14	67.841.

Table 9—CANAL ZONE POSTAL SAVINGS SYSTEM BOOKLET

Showing where sections of the Canal Zone Postal Savings System Booklet have been carried into, and codified in, revised 35 CFR.

C.Z. Post. Sav. System	Revised 35 CFR
Sec.	*Sec.*
1.2	67.791.
1.3	67.792.
1.4	67.793.
1.5	67.794.
2.25	67.811.
2.31	67.812.
2.32	67.812.
2.41	67.813.
2.51	67.814.
2.52	67.814.
3.111	67.831.
3.112	67.831.
3.113	67.831.
3.121	67.831.
3.131	67.831.
3.141	67.831.
3.211	67.832.
3.212	67.832.
3.213	67.832.
3.31	67.833.
3.32	67.833.
3.331	67.833.
3.332	67.833.
3.333	67.834.
3.334	67.835.
3.41	67.836.
3.42	67.836.
3.421	67.836.
3.422	67.836.
3.423	67.836.
3.43	67.836.
3.51	67.837.
3.511	67.837.

C.Z. Post. Sav. System	Revised 35 CFR
Sec.	*Sec.*
3.5111	67.837.
3.512	67.837.
3.513	67.837.
3.514	67.837.
3.515	67.837.
3.516	67.837.
3.517	67.837.
3.518	67.837.
3.521	67.838.
3.522	67.838.
3.523	67.838.
3.524	67.838.
3.525	67.838.
3.526	67.838.
3.527	67.838.
3.6	67.839.
5	67.840.
6.1	67.861.
6.2	67.862.
6.22	67.862.
6.23	67.862.
6.24	67.863.
6.31	67.864.

Table 10—CANAL ZONE POSTAL MONEY ORDER SYSTEM BOOKLET

Showing where sections of the Canal Zone Postal Money Order System Booklet have been carried into, and codified, in, revised 35 CFR.

C.Z. Post. M.O. System	Revised 35 CFR
Sec.	*Sec.*
1.1	67.671.
1.2	67.672.
2.25	67.681.
2.3	67.682.
2.31	67.682.
2.32	67.682.
2.4	67.683.
2.41	67.683.
2.5	67.684.
2.51	67.684.
2.53	67.684.
3.1	67.701.
3.11	67.701.
3.12	67.701.
3.13	67.701.
3.14	67.701,67.702.
3.15	67.701.
3.151	67.701.
3.16	67.701.
3.161	67.701.
3.2	67.701.
3.21	67.701.
3.3	67.701.

C.Z. Post. M.O. System	Revised 35 CFR
Sec.	*Sec.*
3.31	67.701.
3.312	67.701.
3.32	67.701.
3.321	67.701.
3.322	67.701.
3.323	67.701.
3.4	67.702.
3.5	67.703.
3.411	67.702.
3.511	67.703.
3.521	67.703.
3.522	67.703.
3.523	67.703.
3.6	67.704.
3.61	67.704.
3.62	67.704.
3.621	67.704.
4.1	67.721.
4.111	67.721.
4.12	67.721.
4.121	67.721.
4.122	67.721.
4.123	67.721.
4.124	67.721.
4.125	67.721.
4.2	67.722.
4.21	67.722.
4.211	67.722.
4.221	67.722.
4.2211	67.722.
4.2212	67.722.
4.2213	67.722.
4.2214	67.722.
4.222	67.722.
4.223	67.722.
4.23	67.722.
4.231	67.722.
4.232	67.722.
4.233	67.722.
4.234	67.722.
4.235	67.722.
4.236	67.722.
4.237	67.722.
4.238	67.722.
4.24	67.722.
4.241	67.722.
4.242	67.722.
4.243	67.722.
4.25	67.722.
4.251	67.722.
4.252	67.722.
4.253	67.722.
4.26	67.722.
4.261	67.722.
4.262	67.722.
4.262	67.722.
4.264	67.722.
4.265	67.722.
4.266	67.722.
4.27	67.722.
4.28	67.722.
4.291	67.722.
4.292	67.722.
4.293	67.722.

C.Z. Post. M.O. System	Revised 35 CFR
Sec.	*Sec.*
4.294	67.722.
4.31	67.723.
4.311	67.723.
4.312	67.723.
4.32	67.723.
4.321	67.723.
4.322	67.723.
6.11	67.741.
6.21	67.742.
7.1	67.761.
7.11	67.761.
7.12	67.761.
7.121	67.761.
7.21	67.762.
7.22	67.762.
7.23	67.762.
7.24	67.762.
7.3	67.763.
7.31	67.763.
7.32	67.763.
7.4	67.764.
7.41	67.764.
7.42	67.764.
7.43	67.764.
7.5	67.765.
7.51	67.765.
7.52	67.765.
7.6	67.765.
7.61	67.765.
7.62	67.765.
7.71	67.766.
8.1	67.673.

Table 11—MISCELLANEOUS REGULATIONS

Showing where miscellaneous regulations, instructions and other documents have been carried into this revision of 35 CFR. Except as otherwise noted, these separate regulations were repealed, as such by one or another of the documents promulgating the regulations set out in this revision.

Regulations or other document	Revised 35 CFR
Letter of President Harry S. Truman, May 30, 1952 (status of Sec'y of Army in supervising administration of C.Z. Government).	3.2.
Resolution of Panama Canal Co.'s Board of Directors, Oct. 9, 1954 (Payment of tolls and other vessel charges).[1]	133.71 to 133.75.
Regulations of Governor of Canal Zone, June 30, 1960 (small-tug masters).	119.181, 119.182.
U.S. Treas. Dept. Order 180–6, 26 F.R. 3142, Apr. 13, 1961.[2]	65.1 to 65.7.
Panama Canal Co. Comptroller's Circular No. 44, §6, Oct. 27, 1961 (narcotic drugs).	65.73.
Canal Zone Health Director's Policy Memo HL–2, §§1—12, 14, May 4, 1964 (narcotic drugs).	65.81 to 65.91, 65.111, 65.112.

Regulations or other document	Revised 35 CFR

[1] But this resolution not repealed.
[2] But this order not repealed.

Table 12—OMITTED 35 CFR (1960) SECTIONS

Showing sections of 35 CFR (1960) omitted from this revision of 35 CFR, but not repealed by any of the documents promulgating this revision nor superseded by any of the regulations set out in the revision.[1]

35 CFR (1960)	Source
1.4	E.O. 4019, June 5, 1924, as affected by E.O. 5704, Sept. 2, 1931.
4.175	Proc. 1371 (part), May 23, 1917.

[1] This table does not purport to list sections of 35 CFR (1960) which were omitted from this revision, and which were repealed by one or another of the documents promulgating the revision. Those sections are included in Table 2. Nor does this table purport to set forth omitted orders dealing with the Canal Zone which were not codified in 35 CFR (1960) and which continue to be in full force and effect. Examples of these are those provisions of Exec. Order No. 1888, Feb. 2, 1914, as amended, relating to leave of Canal Zone employees; and Exec. Order No. 2455, Sept. 15, 1916, transferring to the Governor of the ''Panama Canal'' (now Governor of Canal Zone) the administration of the Federal Employees' Compensation Act (5 U.S.C. 751 et seq.) with respect to Federal employees in the Canal Zone.

Table 13—Orders Omitted as Executed, Superseded, or Obsolete

Showing executive orders of the President of the United States, and other orders, relating to or affecting the Canal Zone, omitted from this revision as executed, superseded, and/or obsolete, or obsolete with respect to further effectiveness in the Canal Zone. The reason for the omission is given in the last column. Citations in that column to ''C.Z.C.'' and ''U.S.C.'' refer to the Canal Zone Code of 1963, and United States Code, respectively; and citations therein to 35 CFR refer to this revision of 35 CFR.

Executive Orders of the President of the United States

Exec. Ord. No.	Date	Subject	Reasons for Omission
	1904		
.....	Mar. 26	Compensation of Isthmian Canal Commissioners.	Obsolete.

Exec. Ord. No.	Date	Subject	Reasons for Omission
.....	May 9 (Letter)	Defining jurisdiction and functions of Isthmian Canal Commission.	Partly superseded by Title 1, § 1 of C.Z. Code of 1934 (now 1 C.Z.C. (1963) 31). Remainder obsolete.
.....	Nov. 15	Civil service classification of Isthmian Canal Commission.	Obsolete.
.....	Dec. 8	Employees' citizenship	Obsolete. See 2 C.Z.C. ch. 7.
	1905		
.....	Jan. 5	Civil service rules (amendment relating to Isthmian Canal Commission).	Now covered by C.Z. personnel laws and regulations. See 2 C.Z.C. ch. 7; 35 CFR Parts 251, 253.
.....	Jan. 13	Special Commissioner (J. L. Bristow).	Executed and obsolete.
.....	Apr. 1	Reorganization of Isthmian Canal Commission.	Obsolete.
.....	Apr. 1	Accounting system	Obsolete. See 31 U.S.C. §§41 et seq., 65 et seq., 71 et seq., 841 et seq.
.....	June 8	Appointments to positions under Isthmian Canal Commission.	Executed and obsolete.
.....	June 24	Appointments to board of consulting engineers re canal construction.	Executed and obsolete.
.....	July 15	Compensation of special Panama R.R. Commissioner (J. L. Bristow).	Executed and obsolete.
.....	Aug. 31	Compensation of consulting engineers re canal construction.	Executed and obsolete.
.....	Sept. 8	Removal of C.Z. employees	Now covered by C.Z. personnel laws and regulations. See 2 C.Z.C. ch. 7; 35 CFR Parts 251, 253.
.....	Nov. 25	Compensation of consulting engineers re canal construction.	Executed and obsolete.
.....	Dec. 7	Sessions of Isthmian Canal Commission.	Executed and obsolete.
.....	Dec. 18	Appointment to position under Isthmian Canal Commission (A. F. McCormick).	Executed and obsolete.
	1906		
.....	Jan. 8	Appointment to position under Isthmian Canal Commission (R. Whitman).	Executed and obsolete.
.....	Feb. 19	Compensation of consulting engineers re canal construction.	Executed and obsolete.
.....	Feb. 26	Compensation of members of Isthmian Canal Commission.	Executed and obsolete.

Exec. Ord. No.	Date	Subject	Reasons for Omission
.....	Mar. 26	Clarifies order of Feb. 26, 1906, relating to compensation of Commissioners.	Executed and obsolete.
.....	May 31	Procedure for appointments on Isthmus of Panama.	Obsolete. See 2 C.Z.C. ch. 7; 35 CFR Parts 251, 253.
.....	June 30	Compensation of Isthmian Canal Commission members.	Executed and obsolete.
.....	July 17	Appointments to certain positions on Isthmus of Panama.	Executed and obsolete.
.....	Sept. 20	Sessions of Isthmian Canal Commission.	Obsolete.
.....	Nov. 17	Reorganization of Isthmian Canal Commission.	Obsolete.
	1907		
.....	Feb. 21	Transfer of certain C.Z. employee to classified service in U.S. (J. E. Kidwell).	Executed and obsolete.
.....	Mar. 4	Appointments re Isthmian Canal Commission.	Executed and obsolete.
.....	Mar. 13	Administrative districts in C.Z.	Obsolete. See 2 C.Z.C.; 3 C.Z.C.; 35 CFR Parts 1, 3, 5, 201.
.....	Mar. 13	Marriages in Canal Zone	Superseded by E.O. May 31, 1907, and now covered by 8 C.Z.C. ch. 1.
.....	Mar. 16	Appointments and compensation of members of Isthmian Canal Commission.	Executed and obsolete.
.....	Mar. 18	Allowances for Lieut. Col. Geo. W. Goethals.	Executed and obsolete.
.....	Mar. 22	Promulgation of Code of Civil Procedure for C.Z.	Now covered by 4 C.Z.C.; 5 C.Z.C., and court rules.
.....	Mar. 26	Transfer of W. P. Armstrong, law clerk, to another position.	Executed and obsolete.
.....	Apr. 1	Appointment of Lieut. Col. Geo. W. Goethals to charimanship of Isthmian Canal Commission; compensation.	Executed and obsolete.
.....	Apr. 1	Appointment of J. C. S. Blackburn as Commission member.	Executed and obsolete.
.....	May 31	Marriages in Canal Zone	Now covered by 8 C.Z.C. ch. 1.
.....	July 1	Supervision of purchases by Chief of Engineers, U.S. Army.	Obsolete. See particularly 2 C.Z.C. §66.
.....	Aug. 12	Compensation of Lieut. Col. W. C. Gorgas and Jackson Smith.	Executed and obsolete.
.....	Aug. 15	Reorganization of Washington office of Isthmian Canal Commission.	Obsolete.

Exec. Ord. No.	Date	Subject	Reasons for Omission
.....	Aug. 15	Disbursing and accounting system.	Obsolete. See 31 U.S.C. §§41 et seq., 65 et seq., 71 et seq., 841 et seq.
	1908		
.....	Jan. 6	Powers of Isthmian Canal Commission and Chairman.	Partly revoked by order of Sec'y War, Aug. 4, 1932. Remainder obsolete.
.....	Jan. 9	Unclaimed freight and baggage.	Obsolete. See 4 C.Z.C. §§1872, 2446, 2627.
.....	Jan. 9	Judicial circuits	Now covered by 35 CFR §201.2. See, also, 2 C.Z.C. §2.
750	Feb. 6	Jury trials in criminal cases	Now covered by 6 C.Z.C. §4091 et seq., and court rules.
.....	Feb. 7	Reinstatement of Douglas B. Thompson, with privilege of transfer.	Executed and obsolete.
.....	Feb. 21	Appointment of Edwyn N. Purvis to classified service.	Executed and obsolete.
.....	Mar. 31	Jury trials in criminal cases	Now covered by 6 C.Z.C. §4091 et seq., and court rules.
.....	Apr. 24	Defacing of Survey Monuments.	Now covered by 6 C.Z.C. §1594.
.....	Sept. 15	Appointment of Doctors Hopkins and Cunningham.	Executed and obsolete.
.....	Sept. 30	Continuance in service of George Shaffer, Olof Ekedahl and Willoughby Culbertson.	Executed and obsolete.
.....	Oct. 3	Retention of eight persons employed jointly by Panama R.R. Co. and Isthmian Canal Commission.	Executed and obsolete.
.....	Nov. 7	Criminal appeals from district court of C.Z.	Now covered by 6 C.Z.C., 28 U.S.C.; and court.
.....	Dec. 23	Appointment of H. A. Gudger as Chief Justice of Supreme Court of C.Z.	Executed and obsolete.
.....	Dec. 23	Appointment of Wesley M. Diven as Associate Justice of Supreme Court of C.Z.	Executed and obsolete.
	1909		
.....	June 11	Safety-appliance acts (amendment of E.O. No. 1002, Jan. 6, 1909).	Obsolete.
.....	July 16	Hours of work on Saturday (inapplicability of certain orders to Isthmian employees.	Obsolete.
.....	July 30	Good behavior allowances in C.Z. penitentiary.	Covered by 6 C.Z.C. §6541 et seq.
.....	Oct. 2	Board of Local Inspectors	Superseded by E.O. No. 4314, Sept. 25, 1925, and now covered by 35 CFR Parts 115 et seq.

Exec. Ord. No.	Date	Subject	Reasons for Omission
	1910		
.....	Jan. 26	Sanitary improvement	Obsolete. See 2 C.Z.C. §911; 35 CFR Part 61.
.....	Apr. 2	Collection of liquor license fees.	Obsolete. See 2 C.Z.C. §731; 35 CFR Part 53.
.....	Apr. 12	Appointment and compensation of Maurice H. Thatcher as Commission member.	Executed and obsolete.
.....	Apr. 16	Duties of Counsel and Chief Attorney; and amendment of Code of Criminal Procedure.	Now covered by 3 C.Z.C. and 6 C.Z.C., generally.
.....	July 25	Authority of Isthmian Canal Commission to establish rules and regulations.	Obsolete.
.....	Oct. 4	Collection of taxes	Obsolete.
.....	Oct. 7	Lease of public lands	Obsolete. See 2 C.Z.C. §331 et seq.
	1911		
.....	Jan. 16	French dump cars (use)	Obsolete.
.....	Jan. 19	Land office for C.Z	Obsolete.
.....	Mar. 16	Appointment and compensation of Walter W. Warwick as Associate Justice of Supreme Court of C.Z.	Executed and obsolete.
.....	Mar. 16	Appointment and compensation of Thomas E. Brown, Jr. as Associate Justice of Supreme Court of C.Z.	Executed and obsolete.
.....	Mar. 20	Classification of certain employees.	Executed and obsolete.
.....	May 6	Deserting seamen	Superseded and obsolete. See 2 C.Z.C. §§1381, 1382; 46 U.S.C. §541 et seq.
.....	May 10	Insane asylum and procedure	Obsolete. See 5 C.Z.C. §§722(a), 1631 et seq.; 6 C.Z.C. §4454 et seq.; 24 U.S.C. §196.
.....	May 13	Distillation tax	Obsolete. Stills discontinued as of Jan. 1, 1913 by E.O. No. 1532, May 21, 1912.
.....	June 12	Amends E.O. of May 13, 1911, re distillation tax.	Executed and obsolete.
1386	July 21	Inspection of vessels	Superseded by E.O. No. 4314, Sept. 25, 1925, and now covered by 35 CFR Part 121.
1392	Aug. 4	Animal fights (prohibited) ...	Now covered by 6 C.Z.C. §234.
1413	Sept. 21	Appointment	Executed and obsolete.
1414	Sept. 26	Pleadings, dockets, and costs in former district courts.	Obsolete. See 3 C.Z.C. §373; 5 C.Z.C. §§717, 771.
1419	Oct. 14	Contagious diseases	Obsolete. See 2 C.Z.C. §§911, 912; 35 CFR Part 61.

Exec. Ord. No.	Date	Subject	Reasons for Omission
1420	Oct. 14	Practice of medicine, surgery, dentistry, etc.	Now covered by 35 CFR Part 69.
1430	Nov. 6	Alumni of Mexican engineering school.	Obsolete.
1435	Nov. 18	Notaris public	Now covered by 2 C.Z.C. §1071.
	1912		
1457	Jan. 9	Appointment	Executed and obsolete.
1463	Jan. 12	Census	Executed.
1466	Jan. 24	Appointment	Executed and obsolete.
1468	Feb. 5	Administration of small estates.	Now covered by 7 C.Z.C. §2141 et seq.
1532	May 21	Stills	Obsolete. See reason given above for omitting E.O. of May 13, 1911.
1547	June 19	Temporary waiver of Act relating to hours of labor.	Executed and obsolete.
1605	Sept. 12	Administrative districts in C.Z.	Obsolete.
	1913		
1680	Jan. 13	Inspection of steam vessels	Now covered by 35 CFR Part 121.
1722½	Feb. 26	Workmen's compensation	Now covered by 5 U.S.C. §751 et seq. See particularly, 5 U.S.C. §§790, 791, 793.
1749	Mar. 19	Birds and nests	Superseded by Act July 5, 1932, ch. 420, 47 Stat. 576 (2 C.Z.C. 1934, §§291–293), and now covered by 2 C.Z.C. (1963) §§1471, 1474, 1511.
1751	Mar. 20	Administration of small estates.	Now covered by 7 C.Z.C. §2141 et seq.
1752	Mar. 20	Foreign corporations	Now covered by 2 C.Z.C. §871 et seq.
1755	Mar. 24	Suspends E.O. No. 1722½, re- workmen's compensation.	Executed and obsolete.
1761	Apr. 15	Maritime quarantine regulations for C.Z., etc.	Obsolete. See 35 CFR 61.121 et seq., 101.5.
1792	June 30	Jury trials in criminal cases	Now covered by 6 C.Z.C. §4091 et seq., and court rules.
1810	Aug. 7	Aircraft (unauthorized use)	Now covered by 35 CFR Part 51. See also, 2 C.Z.C. §§701, 702.
1812	Aug. 9	Appointment	Executed and obsolete.
1832	Sept. 25	Returning deportees	Superseded by Act July 5, 1932, ch. 423, 47 Stat. 577, and now covered by 2 C.Z.C. §§842, 843.
	1914		
	Jan. 21	Corrupt influence of agents, employees or servants.	No statute authorizating promulgation.

Exec. Ord. No.	Date	Subject	Reasons for Omission
1885	Jan. 27	Government organization	Obsolete.
1888, §§ 1–19, 40.	Jan. 27 Feb. 2	Conditions of employment, including medical and hospital care of employees, and office hours and hours of labor.	Sections 1–19, 40 (section 19, as last amended by C.Z.O. 32, Feb. 25, 1954, 19 F.R. 1246, and section 40, as so recommended by E.O. 9740, June 20, 1946, 11 F.R. 7029), are obsolete and superseded. See 2 C.Z.C. ch. 7, 76A Stat.; also local regulations and 35 CFR 251, 253.
1902	Mar. 20	Claims for injuries to workmen.	Obsolete. See 5 U.S.C. § 751 et seq., particularly §§ 790, 791, 793.
1917	Apr. 16	Payment of tools and charges.	Now covered by 35 CFR Part 133.
1938	May 13	Pardons; remission of fines and forfeitures; prison labor.	Now covered by 6 C.Z.C., §§ 6501, 6502, 6541 et seq., 6581.
1944	May 20	Ceremonial committee	Executed and obsolete.
1948	May 26	Balboa Naval Radio Station	Obsolete.
1962	June 9	Hours of work for federal employees.	Obsolete in C.Z. See 2 C.Z.C. 101 et seq., 76A Stat. 14; and local regulations.
1964	June 15	Amending Civil Service Rules.	Obsolete in C.Z. See 2 C.Z.C. 141 et seq., 76A Stat. 16; 35 CFR Parts 251, 253.
1988	July 9	Radio equipment on ocean-going vessels.	Now covered by 47 U.S.C. § 351 et seq.
1989	July 9	Board of admeasurement, power to administer oaths etc.	Covered by 2 C.Z.C. §§ 1101, 1102.
1990	July 9	Navigation	Now covered by 35 CFR Part 101 et seq.; 2 C.Z.C. ch. 81.
2014	Aug. 6	Board of Health	Obsolete.
2016	Aug. 8	Customs service in C.Z	Superseded by E.O. No. 4314, Sept. 25, 1925, and now covered by 35 CFR Part 57.
2018	Aug. 14	Postal crimes	Now covered by 6 C.Z.C. § 2001.
2020	Aug. 14	Maritime Quarantine Regulations for C.Z., etc. (amendment).	Obsolete. See 35 CFR Part 61.121 et seq., 101.5.
2026	Aug. 22	Street railways (operation)	Obsolete.
2037	Sept. 3	Punishment for violating navigation rules.	Now covered by 2 C.Z.C. ch. 81. See particularly, 2 C.Z.C. § 1331.
2051	Sept. 19	Gambling	Obsolete. See 6 C.Z.C. § 1531 et seq.
2052	Sept. 19	Workmen's compensation	Obsolete. See 5 U.S.C. § 751 et seq., particularly §§ 790, 791, 793.

Exec. Ord. No.	Date	Subject	Reasons for Omission
2073	Nov. 4	Navigation; radio tolls re ships on Canal business.	Covered by 35 CFR 123.11.
	1915		
2118	Jan 11	Maritime Quarantine Regulations for C.Z. etc. (amendment).	Obsolete. See 35 CFR Part 61.121 et seq., 101.5.
2135	Feb. 4	Accounting to Treasury of U.S. for Panama Canal collections.	Obsolete. Enabling act repealed
2142	Mar. 1	Narcotics	Now covered by CFR Part 65.
2152	Mar. 23	Appointment	Executed.
2185	Apr. 27	Renaming of Culebra Cut as Gaillard Cut.	
2204	May 25	Temporary suspension of certain rent, fuel and power charges.	Executed.
	1916		
	May 16	Appointments	Executed and obsolete.
2410	June 30	Appointments	Executed and obsolete.
2428	July 25	Quarters, fuel and electricity.	Superseded and obsolete. See 2 C.Z.C. §§66, 103, 122.
2440	Aug. 10	Alien silver employes (quarters, fuel and electricity).	Obsolete.
2475	Oct. 17	Commutation of leave privileges in certain cases.	Temporary and obsolete.
	1917		
2526	Feb. 6	Exclusion of Chinese	Superseded by E.O. No. 4314, Sept. 25, 1925, rules 129–141, which, in turn, were revoked by C.Z.O. No. 22, Oct. 20, 1950.
2527	Feb. 6	Exclusion of undesirable persons.	Now covered by 35 CFR Part 59. See also, 2 C.Z.C. §841 et seq.
	1918		
2825	Mar 25	Ft. Sherman Military Reservation.	Now covered by 35 CFR 5.31.
2907	July 9	Anchorage and movement of vessels during national emergency arising from World War I.	Obsolete.
2926	July 26	Navigation	Now covered by 35 CFR ch. I, subch. C.
2968–A	Oct. 3	Funds for mail censorship in C.Z.	Temporary and obsolete.
2971	Oct. 9	Licensing of automobile drivers.	Now covered by local regulations. See also, 2 C.Z.C. §1001 et seq.; 35 CFR 3.3(a) (1) (2).
	Nov. 27	War Trade funds (transfer for expenditure in C.Z.).	Obsolete

Exec. Ord. No.	Date	Subject	Reasons for Omission
	1919		
3031	Jan. 25	Leave due employees returning from military service.	Obsolete.
3062	Mar. 4	Tonnage certificate (amendment of form).	Now covered by 35 CFR Part 135.
3093	May 31	Appointment	Executed and obsolete.
	Nov. 25	Employment, appointment and compensation (amendment of E.O. No. 1888 §3).	Obsolete. See 2 C.Z.C., ch. 7; 35 CFR Parts 251, 253.
	1920		
	Jan. 7	Liquors (use for medicinal, etc., purposes).	Now covered by 35 CFR Part 53, 2 C.Z.C. ch. 53.
	Feb. 3	Obtaining vessels and equipment from Navy.	Obsolete.
	Feb. 11	Quarantine service changes	Now covered by 35 CFR ch. I, subchs. B, C.
	Feb. 20	That part amending E.O. No. 1888, Feb. 2, 1914, §6.	Obsolete. See 2 C.Z.C. ch. 7; 35 CFR Parts 251, 253.
	Mar. 1	Punta Mala Naval Radio Station.	Obsolete.
	Mar. 31	Quarantine in Canal Zone	Superseded by E.O. No. 4314, Sept. 25, 1925, and now covered by 35 CFR Part 61.
	Sept. 1	Paitilla Point Military Reservation.	Obsolete.
3332	Oct. 2	Lease of Hoboken pier to Panama R. S.S. Co.	Obsolete.
	Oct. 30	Licensing of motorcycle operators.	Now covered by local regulations. See also, 2 C.Z.C. §1001 et seq.; 35 CFR 3.3(a) (1) (2).
	Nov. 6	Ft. Sherman Military Reservation.	Now covered by 35 CFR 5.31.
	1921		
	Jan. 5	Payment of tolls and charges (mints, assay offices, etc.).	Now covered by 35 CFR Part 133.
3434	Apr. 14	Motor vehicle regulations	Now covered by local regulations. See also, 2 C.Z.C. §1001 et seq.
3522	July 27	Navigation of Panama Canal	Now covered by 35 CFR ch. 1, subch. C.
3562	Oct. 18	Entry of aliens into Canal Zone.	Now covered by 35 CFR Part 59
3573	Nov. 2	Hoboken piers and use by Panama R.R.S.S. Line.	Executed and obsolete.
3581	Nov. 17	Tolls exemption for vessels transiting Canal for repairs.	Now covered by 35 CFR 133.35.
3585	Dec. 3	Rent and other charges for C.Z. personnel.	Now covered by local personnel regulations. See also, 2 C.Z.C. §§66, 101, 121.
	1922		
3709	July 17	Amendment of E.O. No. 3585, Dec. 3, 1921.	Now covered by local personnel regulations.

Exec. Ord. No.	Date	Subject	Reasons for Omission
3754	Nov. 14	Boxing	Now covered by local regulations. See also, 6 C.Z.C. §§ 2061, 2062.
3761	Dec. 6	Interest on deposit money orders.	Obsolete. See 2 C.Z.C. § 1134; 35 CFR 67.831 et seq.
	1923		
3848	May 16	Balboa Naval Radio Station (addition).	Obsolete.
3903	Sept. 13	Exclusion and deportation of undesirable persons.	Superseded by E.O. No. 4314, Sept. 25, 1925, and now covered by 35 CFR Part 59.
3917	Oct. 16	Transfer of certain buildings in Cristobal to War Dept.	Executed and obsolete. See E.O. No. 6072, Mar. 8, 1933, transferring same property to Navy Department.
3938	Dec. 20	Transit and habor regulations for Panama Canal and approaches.	Superseded by E.O. No. 4314, Sept. 25, 1925, and now covered by 35 CFR Part 101 et Seq.
	1924		
3968	Mar. 5	Pardons, paroles, and remission of fines and forfeitures.	Now covered by 6 C.S.Z. §§ 6541 et seq., 6581, 6621 et seq.
4006	Mar. 17	Appointment	Executed and obsolete.
4087	Oct. 17	Appointment	Executed and obsolete.
	1925		
4276	July 28	Rules of procedure for district court.	Now covered by 3 C.Z.C.; 5 C.Z.C.; 6 C.Z.C. § 3501 et seq., Federal procedural rules, and local rules of district court.
4314 (except rules 14–16).	Sept. 25	Rules governing navigation of Panama Canal and adjacent waters.	Obsolete and covered by 35 CFR 57.1 et seq., 59.1 et seq., 61–121 et seq., and Part 101 et seq.; 2 C.Z.C. 291 et seq., 76A Stat. 23–25. Rules 129–141 repealed by C.Z.O. No. 22, Oct. 20, 1950.
4335	Nov. 6	Motor vehicle licensing	Now covered by local regulations. See also, 2 C.Z.C. § 1001 et seq.
	1926		
4370	Jan. 20	Appointment	Executed and obsolete.
4459	June 17	Overtime compensation (amending E.O. No. 1888, Feb. 2, 1914, § 12).	Now covered by local personnel regulations. See also, 2 C.Z.C., ch. 7; 35 CFR Part 253.
4481	July 19	Appointment	Executed and obsolete.
	1927		
4567	Jan. 15	Appointment	Executed and obsolete.

Exec. Ord. No.	Date	Subject	Reasons for Omission
4636	Apr. 23	Motor vehicle licensing	Now covered by local regulations. See, also, 2 C.Z.C. § 1001 et seq.
4721, par. I	Sept. 14	Compensation of alien employees.	Obsolete. See 2 C.Z.C. §§ 101, 121, 141 et seq.; 35 CFR 253.132.
4729	Sept. 29	Motor vehicle regulations	Now covered by local regulations. See also, 2 C.Z.C. § 1001 et seq.; 6 C.Z.C. § 1691 et seq.
4767	Nov. 25	Appointment	Executed and obsolete.
	1928		
4801	Feb. 2	Licensing of bicycles	Obsolete.
	1929		
5065	Feb. 28	Exclusion of undesirable persons.	Now covered by 2 C.Z.C., ch. 59; 35 CFR Part 59.
5250	Dec. 31	Pardons, paroles, etc. (pardon board).	Now covered by 6 C.Z.C. §§ 6581, 6621 et seq.
	1930		
5298	Mar. 10	Motor vehicle licensing	Now covered by local regulations. See also, 2 C.Z.C. § 1001 et seq.
5369	June 16	Cerro Tigre Ordnance Depot Military Reservation.	Now covered by 35 CFR 5.23.
5382	June 24	Advance of funds to bonded employees.	Obsolete.
	1932		
5788	Feb. 2	Size, weight and speed of motor vehicles.	Obsolete. See local regulations; also, 2 C.Z.C. § 1001 et seq.
5849	May 19	Balboa Naval Base	Now covered by 35 CFR 5.47.
5880	July 9	C.Z. Judicial Divisions	Now covered by 35 CFR 201.2. See also, 3 C.Z.C. § 2.
5888	July 16	Transportation of liquors	Obsolete. See 35 CFR 53; 2 C.Z.C. §§ 731, 732.
	1933		
6010	Jan. 31	Fort Randolph and France Field.	Obsolete. See 35 CFR 5.30.
6128	May 10	Navigation of Panama Canal	Now covered by 35 CFR ch. I, subch. C.
6219	July 26	Healing arts practice regulations for Canal Zone.	Covered by 35 CFR 69.301 et seq.
6243	Aug. 5	Postpones transfer of district court to Department of Justice.	Executed and obsolete.
6301	Sept. 30	Postpones transfer of district court to Department of Justice.	Executed and obsolete.
	1934		
6589	Feb. 6	Motor vehicles licensing	Now covered by local regulations. See also, 2 C.Z.C. § 1001 et seq.

Exec. Ord. No.	Date	Subject	Reasons for Omission
6608	Feb. 20	Interest on deposit money orders.	Obsolete. See 2 C.Z.C. §1134; 35 CFR 67.836.
6848	Sept. 15	Ft. William D. Davis Reservation.	Now covered by 35 CFR 5.27.
	1935		
6997	Mar. 25	Regulations governing manufacture, etc. of alcoholic beverages in Canal Zone.	Covered by 35 CFR Part 53.
7242	Dec. 6	Motor vehicle regulations	Now covered by local regulations. See also, 2 C.Z.C. §1001 et seq.
	1937		
7687	Aug. 10	Retirement benefits for certain employees.	Obsolete. See 2 C.Z.C. §181; Act July 25, 1958, Pub. L. 85–550, §13, 72 Stat. 410, as amended Oct. 18, 1962, Pub. L. 87–845, §2, 76A Stat. 697 (5 U.S.C. §2252 note).
	1939		
8191	July 5	Goethals Memorial Commission.	Executed.
8215	July 25	Free transportation to U.S. on termination of employment (amendment of E.O. No. 1888, §15).	Now covered by local personnel regulations.
8267	Oct. 5	Motor vehicle regulations (amendment of E.O. No. 7242 of Dec. 6, 1935).	Now covered by local regulations.
8306	Dec. 19	Taxes and licenses in Canal Zone.	Now covered by 35 CFR Part 63.
	1940		
8417	May 22	Amending E.O. 4314, rule 120, Sept. 25, 1925.	Covered by 35 CFR 59.1.
	1941		
8719	Mar. 22	Suspending certain statutory provisions relating to employment in Canal Zone, during national emergency proclaimed by Proc. No. 2352, Sept. 8, 1939.	Obsolete.
8753	May 13	Motor vehicle licensing (license tags).	Now covered by local regulations.
8812	June 30	Suspension, during emergency, of certain statutory provisions re employment in C.Z.	Obsolete.
8846	Aug. 8	Revokes license for street railways.	Executed.
8879	Aug. 30	Interest on postal savings certificates.	Now covered by 35 CFR 67.836. See also, 2 C.Z.C. §1134.

Exec. Ord. No.	Date	Subject	Reasons for Omission
	1942		
9064	Feb. 16	Transportation for Isthmian employees during World War II, etc.	Obsolete.
9065	Feb. 17	Motor vehicle regulations	Obsolete. See local regulations.
9175	May 28	Motor vehicle licenses	Now covered by local regulations.
9188	June 30	Employment (temporary suspension of certain statutory provisions).	Obsolete.
9189	July 2	Employment (temporary suspension of certain statutory provisions).	Obsolete.
9212	Aug. 1	Transportation for employees (temporary).	Obsolete.
9227	Aug. 19	Amending E.O. 4314, rules 30, 89–101, Sept. 25, 1925.	Covered by 35 CFR 105.6 117.1 et seq.; 2 C.Z.C. 291 et seq., 76A Stat. 23–25.
9228	Aug. 19	Amending E.O. 4314, Sept. 25, 1925, by adding rule 45a.	Covered by 35 CFR 103.24.
	1943		
9359	July 1	Employment (temporary suspension of certain statutory provisions).	Obsolete.
9404	Dec. 17	Acquisition and disposal of property under title II of Second War Powers Act, 1942.	Obsolete.
	1944		
9456	July 13	Employment (temporary suspension of certain statutory provisions).	Obsolete.
9467, §§ 1–3	Aug. 19	Compensation of employees; R.R. passes; medical care.	Now covered by local personnel regulations. See, also, 35 CFR Part 253; 2 C.Z.C. §§ 101, 121, 233, 76A. Stat. 14, 15, 22.
	1945		
9515	Jan. 18	Navigation (speeds of vessels).	Now covered by 35 CFR ch. I, Subch. C.
9563	June 4	Navigation (meals to be furnished by vessels in certain cases).	Now covered by 35 CFR ch. I, subch. C.
9584	July 3	Employment (temporary suspension of certain statutory provisions).	Obsolete.
	1946		
9740[1]	June 20	Office hours and hours of labor (C.Z. employees).	Superseded. See 2 C.Z.C. ch. 7, 76A Stat. 14; and local regulations. See, also, 35 CFR Parts 251, 253.

Exec. Ord. No.	Date	Subject	Reasons for Omission
9759	July 22	Employment (temporary suspension of certain statutory provisions).	Obsolete.
	1947		
9888	Aug. 26	Employment (temporary suspension of certain statutory provisions).	Obsolete.
	1948		
9999	Sept. 14	Employment (temporary suspension of certain statutory provisions).	Obsolete.
	1949		
10040	Feb. 21	Employment (amendment of E.O. No. 9999, Sept. 14, 1948).	Obsolete.
10089	Dec. 6	Employment (temporary suspension of certain statutory provisions).	Obsolete.
	1950		
10176	Oct. 27	Employment (temporary suspension of certain statutory provisions).	Obsolete.
	1951		
10311	Dec. 10	Employment (temporary suspension of certain statutory provisions).	Obsolete.
	1953		
10502	Dec. 1	Employment (temporary suspension of certain statutory provisions).	Obsolete.
	1954		
10523	Mar. 26	Goethals memorial dedication.	Executed.
10568	Oct. 1	Employment (temporary suspension of certain statutory provisions).	Obsolete.
	1955		
10642	Oct. 26	Employment (temporary suspension of certain statutory provisions).	Obsolete.
	1956		
10690	Nov. 23	Employment (temporary suspension of certain statutory provisions).	Obsolete.
	1957		
10726	Aug. 16	Employment (temporary suspension of certain statutory provisions).	Obsolete.

Exec. Ord. No.	Date	Subject	Reasons for Omission
	1958		
10788	Nov. 14	Employment (temporary suspension of certain statutory provisions).	Obsolete.

[1] That part renumbering (as sec. 40) and amending sec. 42 of E.O. 1888, which see in this table.

Orders of the Secretary of War

Date	Subject	Reasons for Omission
1905		
Jan. 17	Appointments to Joint Commission	Obsolete.
Jan. 19	Appointment to Joint Commission (amendment of order of Jan. 17, 1905).	Obsolete.
Apr. 3	Compensation and allowances of Isthmian Canal Commissioners.	Obsolete.
Apr. 18	Appointments to Joint Commission	Obsolete.
Apr. 24	Appropriation	Obsolete.
May 31	Compensation of Isthmian Canal Commissioners.	Obsolete.
Nov. 5	Accounting system for C.Z	Obsolete. See 31 U.S.C. §§41 et seq., 65 et seq., 71 et seq., 841 et seq.
1906		
July 27	Accounting regulations for C.Z	Obsolete.
Sept. 24	Appropriation for Schools	Obsolete.
Sept. 24	Appropriation of funds for contingent expenses of C.Z. Government.	Obsolete.
Nov. 17	Panamanian stamps	Obsolete.
1907		
Feb. 21	Ratifies action of Commission re salaries.	Obsolete.
Feb. 28	Ratifies acts and resolutions of Commission changing C.Z. laws.	Obsolete.
Feb. 28	Ratifies payment of surety bond premiums.	Obsolete.
Mar. 4	Appointment of J. B. Bishop	Obsolete.
Mar. 12	Patent, trade-mark and copyright laws	Now covered by 4 C.Z.C. §471.
Mar. 12	Appointments to Joint Commission	Obsolete.
Mar. 12	Insurance companies (regulation)	Now covered by 2 C.Z.C. §871, et seq.
Apr. 2	Authority of Governor vested in Chairman of Isthmian Canal Commission.	Obsolete.
Aug. 15	Appointment of H. F. Hodges	Obsolete.

Date	Subject	Reasons for Omission
Aug. 15	Compensation of members of joint tribunal.	Obsolete.
Aug. 17	Expenses of Joint Commissioners	Obsolete.
Sept. 4	Water rates contract (ratification)	Obsolete.
Sept. 4	Liquor regulations	Obsolete.
Sept. 13	Compensation of Ramon Arias F., member of joint tribunal.	Obsolete.
Sept. 13	License fees (minstrel, musical, variety, and other shows).	Obsolete.
Sept. 25	Purchase of bricks	Obsolete.
Oct. 16	Sewer and water regulations	Obsolete.
1908		
Feb. 8	Gold employees (requirements as to U.S. citizenship).	Obsolete.
Feb. 27	Hospital charges for Panamanian indigent sick, lepers, etc.	Obsolete.
Apr. 25	Transfer of certain work projects to Dept. of Civil Administration.	Obsolete.
May 19	Appropriation	Obsolete.
July 6	Appointment of F. C. Boggs	Obsolete.
Aug. 6	Compensation of certain Joint Commission members.	Obsolete.
Aug. 6	Compensation of certain Panamanian Joint Commission members.	Obsolete.
Aug. 12	Approval of resolution authorizing approval of vouchers, etc.	Obsolete.
Sept. 17	Changes names of certain divisions under Dept. of Civil Administration.	Obsolete.
Sept. 28	Compensation E. C. Bumpus	Obsolete.
Oct. 23	Compensation of general purchasing officer and officers detailed for commissary work.	Executed.
Dec. 23	C.Z. Gold employees (restrictions as to U.S. citizenship).	Obsolete.
1909		
Mar. 20	Administration of Korp estate	Executed.
May 14	Abolishes office of Director of Hospitals.	Executed.
May 14	Payment of fines and fees (amending E.O. Mar. 13, 1907, re administrative districts).	Obsolete.
Oct. 15	Insurance companies (amending E.O. Mar. 12, 1907).	Obsolete. See 2 C.Z.C. §871 et seq.
1910		

Date	Subject	Reasons for Omission
Feb. 8	Board of Local Inspectors (administration of oaths).	Now covered by 2 C.Z.C. §1101.
May 24	Executive Secretary (abolishment of office).	Obsolete. Office still exists.
Oct. 4	Department of Law	Obsolete.
1911		
Mar. 11	Exemption of Juan Vampero from employment restrictions.	Obsolete.
Sept. 1	Appointment of E. R. Johnson	Obsolete.
1913		
Jan. 24	Compensation of Joint Land Commissioners.	Obsolete.
Sept. 20	Retention and leave of D. DuB. Gaillard.	Obsolete.
1914		
Jan. 20	Compensation of E. R. Johnson	Obsolete.
May 8	Compensation of Joint Land Commissioners.	Obsolete.
May 13	Approval of acts of Isthmian Canal Commission.	Obsolete.
June 16	Exemption of Isthmian employees from E.O. No. 1962, June 9, 1914 (Saturday hours of work).	Obsolete.
Sept. 8	Compensation of N. Cornet	Obsolete.
Sept. 29	Payment of tolls, etc., as to Government-owned vessels.	Now covered by 35 CFR Part 133. See 35 CFR 133.72.
Nov. 16	Payment of tolls by estimated tonnage, plus percentage, until Oct. 1, 1915.	Obsolete.
1915		
May 12	Sale of materiel acquired for Canal construction.	Obsolete.
Oct. 16	Recesses for Joint Land Commission, and leave regulations.	Obsolete.
1916		
Mar. 25	Appointment of C. L. Bouvé	Obsolete.
May 13	Umpire for Joint Land Commission	Obsolete.
1917		
Mar. 20	Compensation of Joint Commission umpire.	Obsolete.
Sept. 14	Compensation of Joint Land Commissioners.	Obsolete.
Nov. 8	Compensation of Joint Land Commissioners.	Obsolete.

Date	Subject	Reasons for Omission
1918		
May 18	Coordination of purchases with War Industries Board.	Obsolete.
1920		
Jan. 30	Appointment of H. A. Smith	Obsolete.
May 1	Expenses of Joint Land Commission umpire.	Obsolete.
1921		
Feb. 26	Maximum rates for transportation of passengers for hire.	Obsolete, and covered by local regulations.
June 6	Special Panama Canal Commission	Obsolete.
1922		
July 28	Marine Superintendent as acting Governor of C.Z.	Obsolete.
1923		
Aug. 15	Motor vehicle regulations (amending E.O. Apr. 14, 1921).	Obsolete, and covered by local regulations.
1924		
June 21	Saturday hours of work (exemption of Isthmian employees from E.O. No. 4026).	Obsolete.
Dec. 23	Motor vehicle, licensing, and transportation regulations (amendments).	Obsolete, and covered by local regulations.
1925		
Jan. 10	Conditions of employment (amending E.O. No. 3585, Dec. 3, 1921).	Obsolete.
1927		
May 24	Saturday hours of work (exemption of Isthmian employees from E.O. No. 4644).	Obsolete.
May 25	Supplemental instructions to Governor re status and duties of civil officers.	Obsolete. See 2 C.Z.C. chs. 3–7; 3 C.Z.C. ch. 1; 35 CFR Part 3.
1928		
June 18	Appointment of P. A. Bentz	Obsolete.
Sept. 4	Authorizing codification of C.Z. law	Executed and obsolete.
1929		
Jan. 28	Passenger transportation rates (amendment).	Now covered by local regulations.
Aug. 7	Pay increase for 12 additional alien employees.	Obsolete.
1930		
Oct. 10	Passenger transportation rates (amendment).	Now covered by local regultions.
1932		

Date	Subject	Reasons for Omission
Aug. 4	Purchase of supplies (revocation of certain requirement).	Executed.
1934		
July 18	Alcoholic beverages (regulation)	Obsolete. See 2 C.Z.C. §§731, 732; 35 CFR Part 53.

Canal Zone Orders of the Secretary of War and the Secretary of the Army

C.Z.O. No.	Date	Subject	Reasons for Omission
	1946		
1	July 1	Compensation of employees (amendment of E.O. No. 1888, Feb. 2, 1914).	Now covered by personnel regulations. See also, 35 CFR Part 253.
	1947		
8	Mar. 31	Compensation of employees (amendment of E.O. No. 1886, Feb. 2, 1914).	Now covered by personnel regulations. See also, 35 CFR Part 253.
10	Sept. 12	Smallpox vaccination: quarantine of dogs and cats.	Superseded by C.Z.O. 39, 20 F.R. 1399, Mar. 9, 1955; C.Z.O. 41, 20 F.R. 7825, Oct. 19, 1955, and now covered by 35 CFR 61.1 et seq., 61.226 et seq., 61.281.
11	Nov. 21	Navigation (amendment of E.O. No. 4314, rules 46–85, Sept. 25, 1925).	Now covered by 35 CFR Part 111.
	1948		
15	July 15	Navigation and quarantine (amendment of E.O. No. 4314, Sept. 25, 1925).	Now covered by 35 CFR 61.121 et seq., 101.2.
	1950		
22	Oct. 20	Revokes E.O. No. 4314, Ch. X	Executed, and not an appropriate subject of codification.
	1951		
24	Nov. 5	Compensation of employees (amendment of E.O. NO. 1888, Feb. 2, 1914).	Now covered by personnel regulations. See also, 35 CFR Part 253.
	1952		
25	Mar. 10	Maritime and aircraft quarantine (amendment of E.O. 4314, rules 119c, 119g, Sept. 25, 1925).	Superseded by C.Z.O. 39, 20 F.R. 1395, Mar. 9, 1955, as amended by C.Z.O. 40, 20 F.R. 2751, Apr. 26, 1955, and now covered by 35 CFR 61.171, 61.192.

C.Z.O. No.	Date	Subject	Reasons for Omission
	1954		
32	Feb. 25	Medical and hospital care of employees (amendment of E.O. No. 1888, §19, Feb. 2, 1914).	Obsolete and superseded. See local personnel regulations; also 2 C.Z.C. 101, 121, 233, 76A Stat. 14, 15, 22.
	1960		
55	Sept. 28	Air navigation (amendment of 35 CFR (1960), 5.1, and addition of 5.25 to 5.27 thereto).	Superseded by C.Z.O. 67, 28 F.R. 12164, Nov. 15, 1963, and now covered by 35 CFR 51.1, 51.31 to 51.33.

Table 14—EXECUTIVE ORDERS OMITTED BUT NOT REPEALED

Showing executive orders of the President of the United States, relating to the Canal Zone, not codified in this revision of 35 CFR, but regarded as still being in force or serving as the basic authority for actions taken, and therefore not repealed. Orders merely rescinding or repealing prior orders, which also are not repealed, are not included in this table.

E.O. No.	Date
1888, §§20–36 (employees' leave provisions)[1].	Feb. 2, 1914.
2455	Sept. 15, 1916.
4019 (as affected by E.O. No. 5704).	June 5, 1924; 35 CFR (1960) 1.4.
5704	Sept. 2, 1931; 35 CFR (1960) 1.4.
7676, §§5–7, 9	July 26, 1937.
7837	May 12, 1938.
8234	Sept. 5, 1939.
8382	Mar. 25, 1940.
8398	Apr. 25, 1940.
10263	June 29, 1951.

[1] As renumbered and amended by E.O. No. 9740, June 20, 1946, 11 F.R. 7029; amended by Canal Zone Orders No. 5 of Jan. 30, 1947 (Secretary of War), 13 F.R. 8648, No. 17 of Mar. 25, 1949 (Secretary of the Army), 14 F.R. 1499, No. 19 of Feb. 218, 1950 (Secretary of the Army), 15 F.R. 1271, and No. 37 of Oct. 26, 1954 (Secretary of the Army), 19 F.R. 7127; renumbered and amended by Canal Zone Order No. 51 of Feb. 17, 1959 (Secretary of the Army), 24 F.R. 1462; and amended by Canal Zone Order No. 57 of Oct. 19, 1961 (Secretary of the Army), 26 F.R. 10055.

Table 15—ORDERS AND PROCLAMATIONS REPEALED PRIOR TO REVISION

Showing orders and proclamations, relating to the Canal Zone, specifically repealed, superseded, or terminated prior to this revision of 35 CFR. In the last column, ''E.O.'' means Executive Order of the President of the United States; ''Proc.'' means Proclamation of the President of the United States; and ''C.Z.O.'' means Canal Zone Order of the Secretary of War or Secretary of the Army.

Executive Orders of the President of the United States

No. or subject	Date	Repealed or superseded by
Temporary appointments	Nov. 15, 1905	E.O. Jan. 12, 1906.
Transfer of employee to classified position..	June 11, 1907	E.O. Aug. 3, 1907.
Chinese	Jan. 9, 1908	E.O. No. 2526, Feb. 16, 1917.
1076	May 22, 1909	E.O. No. 9636, Oct. 3, 1945.
Hunting	Sept. 8, 1909	E.O. No. 1884, Jan. 27, 1914; Act July 5, 1932, ch. 417, §2, 47 Stat. 572.
Enticement of laborers	Nov. 23, 1909	Act Feb. 16, 1933, ch. 86, 47 Stat. 810.
1239	Aug. 20, 1910	Act Feb. 27, 1933, ch. 128, §1732, 47 Stat. 1346.
1295	Feb. 2, 1911	Act Feb. 27, 1933, ch. 128, §1732, 47 Stat. 1346.
Deportees who return	May 2, 1911	E.O. No. 1832, Sept. 25, 1913.
1409	Sept. 8, 1911	E.O. No. 2040, Sept. 5, 1914; Act Feb. 16, 1933, ch. 89, §4, 47 Stat. 813.
1448	Dec. 26, 1911	C.Z.O. No. 68, May 27, 1964.
1489	Feb. 28, 1912	E.O. No. 3434, Apr. 14, 1921.
1705	Feb. 18, 1913	E.O. No. 2121, Jan. 19, 1915.
1857	Nov. 7, 1913	E.O. Mar. 6, 1920; Act July 5, 1932, ch. 418, §8, 47 Stat. 574.
1884	Jan. 27, 1914	Act July 5, 1932, ch. 417, §2, 47 Stat. 572.
1897	Mar. 12, 1914	Order Secretary War, Aug. 4, 1932.
1898	Mar. 12, 1914	E.O. No. 7676, July 26, 1937.
2006	July 30, 1914	E.O. No. 8250, Sept. 11, 1939.
2007	Aug. 3, 1914	E.O. No. 7676, July 26, 1937.
2019	Aug. 14, 1914	E.O. Jan. 9, 1920.
2062	Oct. 13, 1914	E.O. No. 8306, Dec. 9, 1939.
2120	Jan. 15, 1915	E.O. July 25, 1916.
2164	Apr. 7, 1915	E.O. No. 10351, May 15, 1952.
2382	May 17, 1916	E.O. No. 10398, Sept. 26, 1952.
2451	Sept. 5, 1916	E.O. No. 3434, Apr. 14, 1921.
2479	Oct. 22, 1916	E.O. No. 3761, Dec. 6, 1922.
Control of Canal Zone during hostilities.	Apr. 9, 1917	E.O. No. 3032, Jan. 25, 1919.
2692	Aug. 27, 1917	E.O. No. 3027, Jan. 25, 1919.
2737	Oct. 24, 1917	E.O. No. 3027, Jan. 25, 1919.
2867	May 28, 1918	E.O. No. 2907, July 9, 1918.
2869	May 28, 1918	E.O. No. 3130, July 25, 1919.
2987	Nov. 4, 1918	E.O. No. 9147, Apr. 25, 1942.
2993	Nov. 14, 1918	E.O. No. 9039, Jan. 24, 1942.
2996	Nov. 16, 1918	E.O. May 16, 1921.
3202	Dec. 22, 1919	E.O. No. 7407, July 6, 1936.

No. or subject	Date	Repealed or superseded by
3203	Dec. 22, 1919	E.O. No. 7806, Feb. 5, 1938.
3207	Dec. 30, 1919	C.Z.O. No. 29, Sept. 26, 1952.
Carrying and keeping arms	Mar. 6, 1920	Act July 5, 1932, ch. 418, §8, 47 Stat. 574.
3257	Apr. 9, 1920	C.Z.O. No. 31, June 30, 1953.
3386	Jan. 21, 1921	E.O. No. 7407, July 6, 1936.
3427	Apr. 7, 1921	E.O. No. 3562, Oct. 18, 1921.
3428	Apr. 8, 1921	E.O. No. 7407, July 6, 1936.
3603	Dec. 30, 1921	E.O. No. 4276, July 28, 1925.
3965	Feb. 26, 1924	E.O. No. 7676, July 26, 1937.
3985	Apr. 3, 1924	E.O. No. 4006, May 7, 1924.
4047	July 8, 1924	E.O. No. 7387, June 15, 1936.
4104	Nov. 22, 1924	E.O. No. 7387, June 15, 1936.
4125	Jan. 12, 1925	E.O. No. 4476 July 12, 1926.
4314, rules 19–25, 129–141	Sept. 25, 1925	C.Z.O. No. 22, Oct. 20, 1950; C.Z.O. No. 36, Oct. 26, 1954.
4711	Aug. 29, 1927	E.O. No. 7676, July 26, 1937.
4792	Jan. 3, 1928	E.O. No. 7676, July 26, 1937.
4813	Feb. 21, 1928	E.O. No. 5426, Aug. 20, 1930.
4947	Aug. 11, 1928	E.O. No. 8354, Feb. 25, 1940.
4971	Sept. 28, 1928	E.O. No. 8251, Sept. 12, 1939.
5047	Feb. 18, 1929	C.Z.O. No. 3, Jan. 21, 1947.
5426	Aug. 20, 1930	E.O. No. 5869, June 30, 1932.
5704	Sept. 2, 1931	E.O. No. 7676, July 26, 1937.
6010	Jan. 31, 1933	C.Z.O. No. 31, June 30, 1953.
6390	Nov. 3, 1933	E.O. No. 7676, July 26, 1937.
6713	May 21, 1934	C.Z.O. No. 29, Sept. 26, 1952.
6843	Sept. 15, 1934	E.O. No. 7806, Feb. 5, 1938.
7021	Apr. 19, 1935	E.O. No. 10102, Jan. 31, 1950.
7234	Nov. 25, 1935	E.O. No. 8879, Aug. 30, 1941.
7387	June 15, 1936	C.Z.O. No. 44, Sept. 7, 1956.
7399	June 23, 1936	E.O. No. 9434, Apr. 8, 1944.
7407	July 6, 1936	E.O. No. 9293, Jan. 2, 1943.
7806	Feb. 5, 1938	C.Z.O. No. 18, Sept. 14, 1949.
7862	Apr. 7, 1938	C.Z.O. No.44, Sept. 7, 1956.
8232	Sept. 5, 1939	E.O. No. 10107, Feb. 8, 1950.
8251	Sept. 12, 1939	C.Z.O. No. 3, Jan. 21, 1947.
8271	Oct. 16, 1939	C.Z.O. No. 3, Jan. 21, 1947.
8306	Dec. 19, 1939	C.Z.O. No. 69, 29 F.R. 15573, Nov. 20, 1954.
8354	Feb. 25, 1940	C.Z.O. No. 28, Aug. 11, 1952.
8430	June 5, 1940	E.O. No. 8766, June 3, 1941.
8737	Apr. 16, 1941	C.Z.O. No. 6, Mar. 31, 1947.
8782	June 12, 1941	C.Z.O. No. 2, Dec. 1, 1946.
8981	Dec. 17, 1941	C.Z.O. No. 23, May 18, 1951.
8986	Dec. 19, 1941	E.O. No. 9467, Aug. 19, 1944.
9039	Jan. 24, 1942	E.O. No. 9740, June 20, 1946.
9110	Mar. 24, 1942	C.Z.O. No. 6, Mar. 31, 1947.
9164	May 18, 1942	E.O. No. 9467, Aug. 19, 1944.
9171	May 21, 1942	E.O. No. 9434, Apr. 8, 1944.
9293	Jan. 2, 1943	C.Z.O. No. 65, June 18, 1963.
9479	Sept. 6, 1944	E.O. No. 10102, Jan. 31, 1950.
9512	Jan. 16, 1945	E.O. No. 10093, Dec. 20, 1949.
10101	Jan. 31, 1950	E.O. No. 10595, Feb. 7, 1955.
10794	Dec. 10, 1958	E.O. No. 11171, Aug. 18, 1964.

Proclamations of the President of the United States

No.	Date	Repealed or superseded by
1225	Nov. 13, 1912	Proc. No. 2247, Aug. 25, 1937.

No.	Date	Repealed or superseded by
1258	Nov. 21, 1913	Proc. No. 2248, Aug. 25, 1937.
2775	Mar. 26, 1948	Proc. No. 2903, Sept. 26, 1950.
2808	Sept. 7, 1948	Proc. No. 2903, Sept. 26, 1950.
2831	Mar. 12, 1949	Proc. No. 2903, Sept. 26, 1950.
2852	Aug. 25, 1949	Proc. No. 2903, Sept. 26, 1950.
2875	Mar. 6, 1950	Proc. No. 2903, Sept. 26, 1950.

Orders of the Secretary of War

Subject	Date	Repealed or superseded by
Customs service	June 24, 1904	Order Secretary War, Dec. 16, 1904.
Postal service	June 24, 1904	Act Feb. 16, 1933, ch. 89, §4, 47 Stat. 813.
Importations	Dec. 3, 1904	Proc. No. 1699, May 28, 1924; see also, 43 Stat. 1952; Act Feb. 16, 1933, ch. 89, §4, 47 Stat. 813.
Importations	Dec. 6, 1904	Proc. No. 1699, May 28, 1924; see also, 43 Stat. 1952.
Customs administration	Dec. 28, 1904	Proc. No. 1699, May 28, 1924; see also, 43 Stat. 1952.
Entries of merchandise	Jan. 7, 1905	Proc. No. 1699, May 28, 1924; see also, 43 Stat. 1952.
Recording instruments	Mar. 12, 1907	E.O. Feb. 2, 1911.
Administration of estates	June 22, 1907	E.O. No. 1468, Feb. 5, 1912.
Speed of automobiles	Feb. 27, 1908	E.O. No. 1489, Feb. 28, 1912.
Amendment of Code Civ. Proc. §321.	July 3, 1908	Act Feb. 27, 1933, ch. 127, §1240, 47 Stat. 1123.
Administration of estates	July 21, 1909	E.O. No. 1468, Feb. 5, 1912.
Arms and hunting licenses	Dec. 1, 1909	E.O. No. 1857, Nov. 7, 1913; Act July 5, 1932, ch. 418, §8, 47 Stat. 574.
Import duties and commissary privileges.	Jan. 5, 1911	Proc. No. 1699, May 28, 1924, see also, 43 Stat. 1952.
Hunting licenses (enlisted men).	Nov. 3, 1911	E.O. No. 1857, Nov. 7, 1913; Act July 5, 1932, ch. 418, §8, 47 Stat. 574.
Rates of fare and transportation.	Jan. 12, 1918	Order Secretary War, Feb. 26, 1921.
Rates of fare and transportation.	May 29, 1919	Order Secretary War, Feb. 26, 1921.

Canal Zone Orders Issued by Secretary of War or Secretary of the Army

No.	Date	Repealed or superseded by
2	Dec. 1, 1946	C.Z.O. No. 49, July 8, 1958.
4	Jan. 24, 1947	E.O. No. 10263, June 29, 1951.
6	Mar. 31, 1947	C.Z.O. No. 20, June 29, 1950.
20	June 29, 1950	C.Z.O. No. 49, July 8, 1958.
23	May 18, 1951	C.Z.O. No. 35, Sept. 27, 1954.
26	Mar. 18, 1952	C.Z.O. No. 29, Sept. 26, 1952.
27	Apr. 18, 1952	C.Z.O. No. 29, Sept. 26, 1952.
31	June 30, 1953	C.Z.O. No. 54, Aug. 22, 1960.
38	Dec. 23, 1954	C.Z.O. No. 52, Feb. 17, 1959.
39	Mar. 9, 1955	C.Z.O. No. 68, May 27, 1964.
49	July 8, 1958	C.Z.O. No. 54, Aug. 22, 1960.

No.	Date	Repealed or superseded by
50	Nov. 26, 1958	C.Z.O. No. 54, Aug. 22, 1960.

Table 16—EXECUTIVE ORDERS TO CANAL ZONE CODE

This table shows the location in the Canal Zone Code of sections having their original source in Executive Orders.

		Canal Zone Code (1934)		Canal Zone Code (1963)	
Date	Section	Title	Section	Title	Section
1904					
May 9		1	1	1	31
1907					
Mar. 13		5	342,344, 441,773	6	331,332, 1342
Mar. 22	18	4	43	8	431
Do	29	4	65	4	43
Do	242	4	1161	4	65
Do	243	4	1163	4	1161
Do	247	4	1171	4	1163
Do	393	4	151	4	1171
Do	399	4	958	4	151
Do	414	4	169	4	958
Do	527	4	1009	4	169
Do	530	4	1007	4	1007
Do	531	4	1005	4	1005
Do	670	3	532	4	1009
Do	671	3	533	3	532
Do	794	3	191	3	533
Do	795	3	192	3	191
Do	796	3	193	3	192
Do	797	3	194		
Mar. 22	798	3	195		
Do	809	4	981		
Do	812	4	985		
Do	813	4	986,987		
Do	814	4	988		
Do	817	4	989		
Do	818	4	991		
1908					
Jan. 9		5	603	5	603
Aug. 14		5	773	5	733
1909					
Jan. 6	1	2	241	2	241
Do	2	2	242	2	242
Do	3	2	243	2	243
Do	4	2	244	2	244

Date	Section	Canal Zone Code (1934) Title	Canal Zone Code (1934) Section	Canal Zone Code (1963) Title	Canal Zone Code (1963) Section
Do	5	2	244, note	2	244, note
July 30		5	254	5	254
Do	796			3	193
Do	797			3	194
Do	798			3	195
Do	809			4	981
Do	812			4	985
Do	813			4	986, 987
Do	814			4	988
Do	817			4	989
Do	818			4	991
Oct. 2	1	5	443	5	443
Do	2	5	810	5	810
Do	3	5	44, 811	5	444, 811
Nov. 23		2	224	2	224
1910					
July 28	1	4	121	4	121
1911					
May 11	1	5	828	5	828
June 28		2	304	2	304
Sept. 8	1	5	843	5	843
Sept. 14		5	827	5	827
Nov. 15		5	787	5	787
1912					
Apr. 17	1	5	844	5	844
Do	2	5	845	5	845
Do	3	5	846	5	846
1913					
Mar. 19		2	244, note	2	244, note
Aug. 29	3	6	613	6	613
Nov. 11	1	3	1266	3	1266
Do	2	3	1267	3	1267
Do	3	3	1268	3	1268
Nov. 11	4	3	1269	3	1269
1914					
July 3	1	4	967	4	967
1920					
Jan. 9	1	4	1001	4	1001
Do	2	4	982	4	982
Do	3	4	983	4	983
Do	4	4	1021	4	1021
Do	5	4	1022	4	1022
Do	6	4	1023	4	1023
Do	7	4	1002	4	1002
Do	8	4	1024	4	1024
Do	9	4	1025	4	1025
Do	10	4	1026	4	1026
Do	12	4	1003	4	1003
Do	15	4	1004	4	1004
Do	16	4	1006	4	1006

Date	Section	Canal Zone Code (1934) Title	Canal Zone Code (1934) Section	Canal Zone Code (1963) Title	Canal Zone Code (1963) Section
Do	17	4	984	4	984
1924					
Mar. 5	1	4	982	4	982
Do	2	4	984, 1004, 1005, 1006	4	984, 1004, 1005, 1006
1925					
July 28	Rule 1	4	153	4	153
Do	Rule 2	4	26	4	26
Do	Rule 7	4	442	4	442
Do	Rule 18	4	45	4	45
Do	Rule 20	4	965, 966	4	965, 966
1928					
Jan. 3	2	4	393	4	393
Do	3	4	394	4	394
Do	4	4	395	4	395
Do	5	4	396	4	396
Do	7	4	397	4	397
June 23	.....	4	987	4	987
Nov. 3	3	4	1751	4	1751
Do	4	4	1752	4	1752
Do	5	4	1753	4	1753
Do	6	4	1754	4	1754
Do	7	4	1755	4	1755
Do	9	4	1756	4	1756
Do	10	4	1758	4	1758
Do	11	4	1759	4	1759
Do	12	4	1760	4	1760
Do	13	4	1761	4	1761
Do	14	4	1762	4	1762
Do	15	4	1762	4	1762

List of CFR Sections Affected

All changes in this volume of the Code of Federal Regulations which were made by documents published in the Federal Register since January 1, 1986, are enumerated in the following list. Entries indicate the nature of the changes effected. Page numbers refer to Federal Register pages. The user should consult the entries for chapters and parts as well as sections for revisions.

For the period before January 1, 1986, see the ''List of CFR Sections Affected, 1949–1963, 1964–1972, and 1973–1985'' published in seven separate volumes.

1986

35 CFR

51 FR Page

Chapter I

3.1 (Subpart A) Revised eff. 7–14–86 21359
61 Part heading revised 21360
61.121—61.281 (Subpart E) Revised eff. 7–14–86 21361
103.8 (f)(1) revised; interim 27174
Confirmed 45884
105 Authority citation revised 36011
105.1 (a) revised 36011
105.7 Added 36011
251 Authority citation revised 33262
251.3 (b)(4) amended 33262
251.4 (a) and (b)(2) amended; (b)(3) and (4) removed; (c)(8) redesignated as (b)(6); (g) added 33262
(b) (4) and (6) effective date corrected 40418
251.6 Added 33262
251.12 (b)(1) amended 33262
251.43 (a) and (b) amended 33262
253 Authority citation revised 33262
253.8 (b) introductory text, (1), and (6) revised 25693
(a) and (c)(9) and (10) amended; (c)(8) removed 33262
(b)(6) revised 37182
253.44 (e) revised 33262
253.47 (b) and (c) amended 33262
253.291 (Subpart J) Revised 33262

35 CFR—Continued

51 FR Page

Chapter I —Continued

253.292 Removed 33262

1987

35 CFR

52 FR Page

Chapter I

9 Authority citation revised 31397
9.2 Revised 31397
9.4 Amended 31397
9.5 (a) revised 31397
9.6 (a)(1) amended; (b) revised 31397
9.8 (b)(1) revised 31397
9.11 Revised 31397
9.12 Redesignated as 9.14 31397
Added 31398
9.13 Redesignated as 9.15 31397
Added 31398
9.14 Redesignated from 9.12 31397
9.15 Redesignated from 9.13 31397
103.8 (d)(2) and (3) and (g) revised; (d)(4) added; (f)(1) amended 37952
119 Authority citation revised 3800
119.103 Revised 3800
257 Added 26007

1988

35 CFR

53 FR Page

Chapter I

9.2 Confirmed 16256

35 CFR—Continued

53 FR Page

Chapter I —Continued

9.4 Confirmed 16256
9.5 Confirmed 16256
9.6 Confirmed 16256
9.8 Confirmed 16256
9.11 Revision confirmed; (e) revised 16256
9.12 Redesignation and addition confirmed 16256
9.13 Redesignation and addition confirmed 16256
9.14 Confirmed 16256
9.15 Confirmed 16256
60 Revised 7894
103 Authority citation revised 12517
103.6 (e)(1) revised 12517
103.8 (d)(2) and (3) and (g) revisions, (d)(4) addition, and (f)(1) amendment confirmed 15385

1989

35 CFR

54 FR Page

Chapter I

101.10 (a)(3), (e) and (f) revised 37326
103.1 Amended (OMB numbers) 29336
103.7 Revised 43962
103.19 Heading, (a), and (d) revised; new (e) and (f) added 43962
113.3 (a) introductory text revised 37326
113.4 (a) revised 37327
113.5 Revised 37327
113.21 Revised 37327
113.22 Revised 37327
113.26 (a) revised 37327
113.29 (b) and (c) revised 37327
113.42 Revised 37327
113.43 (c) revised 37327
113.45 Revised 37327
113.49 (b) and (c) revised 37327
113.50 (c), (d) and (e) revised 37327
117.4 Amended (OMB numbers) 29336
121.2 Revised 37328
121.3 Removed 37328
121.41 (a) and (c) revised 37328
121.42 Revised 37328
121.45 Revised 37328
121.47 (c) revised 37328
121.58 Revised 37328
121.63 Heading revised 37328

35 CFR—Continued

54 FR Page

Chapter I —Continued

121.65 Revised 37328
121.66 Revised 37328
121.67 Revised 37329
121.69 Revised 37329
121.70 Revised 37329
121.71 Revised 37329
121.72 Revised 37329
121.74 Revised 37329
121.76 Revised 37329
121.79 Revised 37329
121.85 Revised 37329
121.87 Revised 37329
121.88 Revised 37329
121.89 (a) introductory text, and (1) and (b) revised 37329
121.90 Revised 37330
121.92 Revised 37330
121.99 (c) added 37330
121.102 Revised 37330
121.107 (a), (b) and (c) revised; (d) added 37330
121.108 Revised 37330
121.131 Revised 37330
121.171 Revised 37331
121.173 Revised 37331
123.3 (c) revised 37331
123.4 Heading and (a) revised 37331
133.1 Revised 35148
133.32 Revised 43965
133.34 Revised 35148
Corrected 36096
135 Authority citation revised 29336, 35148
135.1 Amended (OMB numbers) 29336
135.2 Amended (OMB numbers) 29336
135.285 Revised 35148
135.352 Revised 35148
Corrected 36096
135.443 Amended (OMB numbers) 29336
135.484 Amended (OMB numbers) 29336
253.8 (b)(1) and (d) revised 4019
Technical correction 6364

1990

35 CFR

55 FR Page

Chapter I

101.13 (b) introductory text revised 11908
103.3 Nomenclature change 11908

35 CFR—Continued

55 FR Page

Chapter I —Continued
103.4 (b) introductory text nomenclature change 11908
103.6 (b)(1), (f)(2), and (j)(3) amended 11908
103.28 Nomenclature change 11908
103.34 Nomenclature change 11908
105.1 (b) nomenclature change 11909
105.2 Introductory text, (b), and (c) nomenclature change 11909
109.3 Revised 11909
109.6 (a) revised 11909
111.6 (f) nomenclature change 11909
111.13 (e) nomenclature change 11909
111.19 (f) and (g) amended 11909
111.38 (b) nomenclature change 11909
115 Authority citation revised 11909
115.2 (a)(2) amended 11909
117 Authority citation revised 11909
117.5 Nomenclature change 11909
119.221 Revised 4837
Regulation at 55 FR 4837 confirmed 15228
119.223 (c) revised; (d) added 4837
Regulation at 55 FR 4837 confirmed 15228
119.226 Added 4837
Regulation at 55 FR 4837 confirmed; (e) revised 15229

1991

35 CFR

56 FR Page

Chapter I
9 Authority citation revised 11373
9.16 Added; interim 11373
Regulation at 56 FR 11373 confirmed 29179
60.1 (b)(8) revised; (b)(9) and (10) added 59882
60.2 (b)(1) and (c) revised 59882
60.3 (f)(3)(ii) revised 59882
60.4 (a)(1) and (2) revised; (a)(3) added 59882
60.6 (d) introductory text revised 59882
60.8 (b) and (m) intorductory text revised 59882
60.9 (f) revised 59882
60.10 (a), (d)(4)(i) and (e) revised 59883

35 CFR—Continued

56 FR Page

Chapter I —Continued
60.11 (c) and (d) revised 59883
60.12 (a), (d)(3) and (e) revised 59883
60.13 (b), (d) and (e)(1) revised 59883
60.14 (a) revised 59884
60.15 Revised 59884
60.17 (b) and (c) revised; (d) added 59884
101.2 (a) and (b) revised 55632
251.4 (g) revised; (h) added 1923
(h) revised 40555
251.25 Revised 40555
251.31 (a), (b) introductory text, (1) and (c) revised; (b)(4) removed; (b)(5) redesignated as (b)(4) and revised; (e) added 40556
251.32 (b) revised; (d) added 40556
253.8 (b) introductory text, (1), (c)(9) and (10) revised; (c)(8) added 1924
(b) introductory text and (d) revised 40556
253.41 Revised 1924
253.76—253.77 (Subpart D) Added 1924
255 Removed 29180

1992

35 CFR

57 FR Page

Chapter 1
133.1 Revised 37066
251.32 (b) designation corrected 28907

1993

35 CFR

58 FR Page

Chapter I
251.4 (a) amended; (i) added 5616

1994

35 CFR

59 FR Page

Chapter I
7.9 Amended 26122
9.2 Amended 26122
9.4 Amended 26122
9.6 (a)(1) amended 26122
9.8 (b)(1) amended 26122

35 CFR—Continued

59 FR Page

Chapter I —Continued

9.11 (e) introductory text and (4) amended 26122
10.5 (b)(1) amended 26123
10.10 (b)(1) amended 26123
10.12 (a) amended 26123
10.14 (b)(1) amended 26123
10.21 Revised 9089
Regulation at 59 FR 9089 eff. date corrected to 2–25–94 11659
10.22 Revised 9090
Regulation at 59 FR 9090 eff. date corrected to 2–25–94 11659
60.12 (a) and (d)(3) amended 26123
103 Authority citation revised 44929
103.8 (e) revised; OMB number 44929
133 Authority citation revised 43254
133.1 Introductory text, (a) and (b) revised 43254
133.31 Revised 43254
133.32 Revised; OMB number 43254
133.33 Revised 43254
135 Revised 43255
135.2 OMB number 43255
135.3 OMB number 43255
135.31 OMB number 43265
135.42 (a)(2)(i) corrected 52862
135.443 Amended 26123

1995

(No regulations published)

1996

35 CFR

61 FR Page

Chapter I

61.155 (e) added 36497
70 Authority citation revised 16719
70.14 Removed; new 70.14 redesignated from 70.16 and amended 16719
70.15 Removed 16719
70.16 Redesignated as 70.14 16719
123.4 (a) amended 36498
133 Authority citation revised 60612
133.1 Revised 60612

35 CFR—Continued

61 FR Page

Chapter I—Continued

135 Authority citation revised 60612
135.2 Amended 60612
135.3 Heading and (a) revised 60612
135.13 (a) introductory text amended; (a)(10) and (11) added; (b) revised 60612
135.14 (d) added 60612
135.15 (d) and (e) added 60612
135.31 Amended 60612
135.41 Amended 60612
135.42 (c) added 60612

1997

(Regulations published from January 1, 1997 through July 1, 1997)

35 CFR

62 FR Page

Chapter I

61.31—61.38 (Subpart B) Removed 33748
61.61—61.69 (Subpart C) Removed 33748
61.91—61.95 (Subpart D) Removed 33748
61.121—61.281 (Subpart E) Nomenclature change 33748
61.121 Amended 33748
61.122 Amended 33748
61.152 Amended 33748
61.154 (a) amended 33748
61.155 (e) correctly revised 12751
(a)(1) and (d) revised 33748
61.193 (a) and (b) amended 33748
61.195 (b) amended 33748
61.201 Amended 33748
61.222 (d) and (e) amended 33748
61.223 (c) amended 33748
61.224 (c) amended 33748
61.225 Amended 33748
61.227 Amended 33748
61.242 (b) amended 33748
61.243 Amended 33748
61.263 (a) revised; (b) amended 33748
61.264 Amended 33748
103.8 Removed; interim 18276
103.9 Removed; interim 18276
104 Added; interim 18276

○