AUTHENTICATED
U.S. GOVERNMENT
INFORMATION
GPO

code of federal regulations

Parks, Forests, and Public Property

36

PART 300 TO END

Revised as of July 1, 1997

CONTAINING
A CODIFICATION OF DOCUMENTS
OF GENERAL APPLICABILITY
AND FUTURE EFFECT

AS OF JULY 1, 1997

With Ancillaries

Published by
the Office of the Federal Register
National Archives and Records
Administration

as a Special Edition of
the Federal Register

As of July 1, 1997
Title 36, Part 200 to End
Revised as of July 1, 1996
Is Replaced by Two Volumes
Title 36, Parts 200 to 299
and
Title 36, Part 300 to End

U.S. GOVERNMENT PRINTING OFFICE
WASHINGTON : 1997

For sale by U.S. Government Printing Office
Superintendent of Documents, Mail Stop: SSOP, Washington, DC 20402–9328

Table of Contents

	Page
Explanation	v
Title 36:	
Chapter III—Corps of Engineers, Department of the Army	3
Chapter IV—American Battle Monuments Commission	33
Chapter V—Smithsonian Institution	47
Chapter VI—[Reserved]	
Chapter VII—Library of Congress	55
Chapter VIII—Advisory Council on Historic Preservation	83
Chapter IX—Pennsylvania Avenue Development Corporation	125
Chapter X—[Reserved]	
Chapter XI—Architectural and Transportation Barriers Compliance Board	191
Chapter XII—National Archives and Records Administration	427
Chapter XIV—Assassination Records Review Board	667
Finding Aids:	
Material Approved for Incorporation by Reference	689
Table of CFR Titles and Chapters	691
Alphabetical List of Agencies Appearing in the CFR	707
Redesignation Tables	717
List of CFR Sections Affected	721

Cite this Code: CFR

To cite the regulations in this volume use title, part and section number. Thus, 36 CFR 312.1 *refers to title 36, part 312, section 1.*

Explanation

The Code of Federal Regulations is a codification of the general and permanent rules published in the Federal Register by the Executive departments and agencies of the Federal Government. The Code is divided into 50 titles which represent broad areas subject to Federal regulation. Each title is divided into chapters which usually bear the name of the issuing agency. Each chapter is further subdivided into parts covering specific regulatory areas.

Each volume of the Code is revised at least once each calendar year and issued on a quarterly basis approximately as follows:

Title 1 through Title 16.....as of January 1
Title 17 through Title 27.....as of April 1
Title 28 through Title 41.....as of July 1
Title 42 through Title 50.....as of October 1

The appropriate revision date is printed on the cover of each volume.

LEGAL STATUS

The contents of the Federal Register are required to be judicially noticed (44 U.S.C. 1507). The Code of Federal Regulations is prima facie evidence of the text of the original documents (44 U.S.C. 1510).

HOW TO USE THE CODE OF FEDERAL REGULATIONS

The Code of Federal Regulations is kept up to date by the individual issues of the Federal Register. These two publications must be used together to determine the latest version of any given rule.

To determine whether a Code volume has been amended since its revision date (in this case, July 1, 1997), consult the ''List of CFR Sections Affected (LSA),'' which is issued monthly, and the ''Cumulative List of Parts Affected,'' which appears in the Reader Aids section of the daily Federal Register. These two lists will identify the Federal Register page number of the latest amendment of any given rule.

EFFECTIVE AND EXPIRATION DATES

Each volume of the Code contains amendments published in the Federal Register since the last revision of that volume of the Code. Source citations for the regulations are referred to by volume number and page number of the Federal Register and date of publication. Publication dates and effective dates are usually not the same and care must be exercised by the user in determining the actual effective date. In instances where the effective date is beyond the cutoff date for the Code a note has been inserted to reflect the future effective date. In those instances where a regulation published in the Federal Register states a date certain for expiration, an appropriate note will be inserted following the text.

OMB CONTROL NUMBERS

The Paperwork Reduction Act of 1980 (Pub. L. 96–511) requires Federal agencies to display an OMB control number with their information collection request.

Many agencies have begun publishing numerous OMB control numbers as amendments to existing regulations in the CFR. These OMB numbers are placed as close as possible to the applicable recordkeeping or reporting requirements.

OBSOLETE PROVISIONS

Provisions that become obsolete before the revision date stated on the cover of each volume are not carried. Code users may find the text of provisions in effect on a given date in the past by using the appropriate numerical list of sections affected. For the period before January 1, 1986, consult either the List of CFR Sections Affected, 1949–1963, 1964–1972, or 1973–1985, published in seven separate volumes. For the period beginning January 1, 1986, a ''List of CFR Sections Affected'' is published at the end of each CFR volume.

INCORPORATION BY REFERENCE

What is incorporation by reference? Incorporation by reference was established by statute and allows Federal agencies to meet the requirement to publish regulations in the Federal Register by referring to materials already published elsewhere. For an incorporation to be valid, the Director of the Federal Register must approve it. The legal effect of incorporation by reference is that the material is treated as if it were published in full in the Federal Register (5 U.S.C. 552(a)). This material, like any other properly issued regulation, has the force of law.

What is a proper incorporation by reference? The Director of the Federal Register will approve an incorporation by reference only when the requirements of 1 CFR part 51 are met. Some of the elements on which approval is based are:

(a) The incorporation will substantially reduce the volume of material published in the Federal Register.

(b) The matter incorporated is in fact available to the extent necessary to afford fairness and uniformity in the administrative process.

(c) The incorporating document is drafted and submitted for publication in accordance with 1 CFR part 51.

Properly approved incorporations by reference in this volume are listed in the Finding Aids at the end of this volume.

What if the material incorporated by reference cannot be found? If you have any problem locating or obtaining a copy of material listed in the Finding Aids of this volume as an approved incorporation by reference, please contact the agency that issued the regulation containing that incorporation. If, after contacting the agency, you find the material is not available, please notify the Director of the Federal Register, National Archives and Records Administration, Washington DC 20408, or call (202) 523–4534.

CFR INDEXES AND TABULAR GUIDES

A subject index to the Code of Federal Regulations is contained in a separate volume, revised annually as of January 1, entitled CFR INDEX AND FINDING AIDS. This volume contains the Parallel Table of Statutory Authorities and Agency Rules (Table I), and Acts Requiring Publication in the Federal Register (Table II). A list of CFR titles, chapters, and parts and an alphabetical list of agencies publishing in the CFR are also included in this volume.

An index to the text of ''Title 3—The President'' is carried within that volume.

The Federal Register Index is issued monthly in cumulative form. This index is based on a consolidation of the ''Contents'' entries in the daily Federal Register.

A List of CFR Sections Affected (LSA) is published monthly, keyed to the revision dates of the 50 CFR titles.

REPUBLICATION OF MATERIAL

There are no restrictions on the republication of material appearing in the Code of Federal Regulations.

INQUIRIES

For a legal interpretation or explanation of any regulation in this volume, contact the issuing agency. The issuing agency's name appears at the top of odd–numbered pages.

For inquiries concerning CFR reference assistance, call 202–523–5227 or write to the Director, Office of the Federal Register, National Archives and Records Administration, Washington, DC 20408.

SALES

The Government Printing Office (GPO) processes all sales and distribution of the CFR. For payment by credit card, call 202–512–1800, M–F, 8 a.m. to 4 p.m. e.s.t. or fax your order to 202–512–2233, 24 hours a day. For payment by check, write to the Superintendent of Documents, Attn: New Orders, P.O. Box 371954, Pittsburgh, PA 15250–7954. For GPO Customer Service call 202–512–1803.

RAYMOND A. MOSLEY,
Director,
Office of the Federal Register.

July 1, 1997.

THIS TITLE

Title 36—PARKS, FORESTS, AND PUBLIC PROPERTY is composed of three volumes. The parts in these volumes are arranged in the following order: parts 1 to 199, parts 200 to 299, and part 300 to End. The contents of these volumes represent all current regulations codified under this title of the CFR as of July 1, 1997.

Redesignation tables appear in the Finding Aids section of the third volume.

For this volume, Carol Conroy was Chief Editor. The Code of Federal Regulations publication program is under the direction of Frances D. McDonald, assisted by Alomha S. Morris.

Would you like to know. . .

if any changes have been made to the *Code of Federal Regulations* or what documents have been published in the *Federal Register* without reading the *Federal Register* every day? If so, you may wish to subscribe to the *LSA* (List of CFR Sections Affected), the *Federal Register Index,* or both.

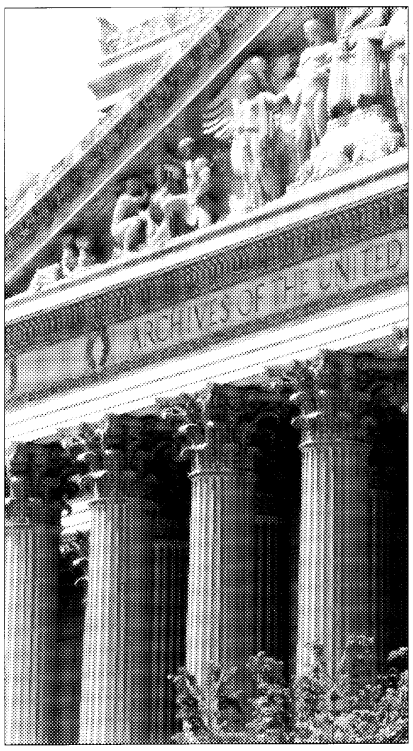

LSA

The *LSA* (List of CFR Sections Affected) is designed to lead users of the *Code of Federal Regulations* to amendatory actions published in the *Federal Register*. The *LSA* is issued monthly in cumulative form. Entries indicate the nature of the changes—such as revised, removed, or corrected.
$27 per year.

Federal Register Index

The index, covering the contents of the daily *Federal Register,* is issued monthly in cumulative form. Entries are carried primarily under the names of the issuing agencies. Significant subjects are carried as cross-references.
$25 per year.

A finding aid is included in each publication which lists *Federal Register* page numbers with the date of publication in the *Federal Register.*

Superintendent of Documents Subscription Order Form

Order Processing Code:
***5421**

❑ **YES,** send me the following indicated subscriptions for one year:

____ **LSA (List of CFR Sections Affected),** (LCS) for $27 per year.

____ **Federal Register Index** (FRSU) $25 per year.

The total cost of my order is $ _____
Price is subject to change. International customers please add 25%.

(Includes regular shipping and handling.)

For privacy check box below:

❑ Do not make my name available to other mailers

Check method of payment:

❑ Check payable to Superintendent of Documents

❑ GPO Deposit Account ☐☐☐☐☐☐☐ — ☐

❑ VISA ❑ MasterCard ☐☐☐☐ (expiration date)

Company or personal name

Street address

City, State, ZIP code

Daytime phone with area code

Purchase order No. (optional)

Credit card No. (must be 20 digits)

Thank you for your order!

Authorizing signature 1/97

Mail To: Superintendent of Documents
PO Box 371954
Pittsburgh PA 15250–7954

Fax your orders (202) 512–2250
Phone your orders (202) 512–1800

Title 36—Parks, Forests, and Public Property

(This book contains part 300 to End)

	Part
CHAPTER III—Corps of Engineers, Department of the Army	312
CHAPTER IV—American Battle Monuments Commission	400
CHAPTER V—Smithsonian Institution	504
CHAPTER VI—[Reserved]	
CHAPTER VII—Library of Congress	701
CHAPTER VIII—Advisory Council on Historic Preservation	800
CHAPTER IX—Pennsylvania Avenue Development Corporation	901
CHAPTER X—[Reserved]	
CHAPTER XI—Architectural and Transportation Barriers Compliance Board	1120
CHAPTER XII—National Archives and Records Administration	1200
CHAPTER XIV—Assassination Records Review Board	1400

CHAPTER III—CORPS OF ENGINEERS, DEPARTMENT OF THE ARMY

Part		*Page*
312	Prohibition of discriminatory practices in water resource development projects	5
327	Rules and regulations governing public use of water resource development projects administered by the Chief of Engineers	5
328	Regulation of seaplane operations at civil works water resource development projects administered by the Chief of Engineers	22
330	Regulation of law enforcement services contracts at civil works water resource projects administered by the Chief of Engineers	24
331	Regulations governing the protection, use and management of the falls of the Ohio National Wildlife Conservation Area, Kentucky and Indiana	28
332–399	[Reserved]	

PART 312—PROHIBITION OF DISCRIMINATORY PRACTICES IN WATER RESOURCE DEVELOPMENT PROJECTS

Sec.
312.1 Areas covered.
312.2 Discriminatory practices prohibited.

AUTHORITY: Sec. 4, 58 Stat. 889, as amended; 16 U.S.C. 460d.

§ 312.1 Areas covered.

The regulation covered in this part shall be applicable to all water resource project lands under the supervision of the Secretary of the Army not covered in parts 311 and 326, of this title.

[29 FR 9710, July 18, 1964]

§ 312.2 Discriminatory practices prohibited.

All project land and water areas which are open to the public shall be available for use and enjoyment by the public without regard to race, creed, color or national origin. Each lessee or licensee of a project area under lease or license providing for a public or quasi-public use, including group camp activities, and each concessionaire of a lessee or licensee providing a service to the public including facilities and accommodations, shall not discriminate against any person or persons because of race, creed, color or national origin in the conduct of its operations under the lease, license or concession agreement.

[29 FR 9710, July 18, 1964]

PART 327—RULES AND REGULATIONS GOVERNING PUBLIC USE OF WATER RESOURCE DEVELOPMENT PROJECTS ADMINISTERED BY THE CHIEF OF ENGINEERS

Sec.
327.0 Applicability.
327.1 Policy.
327.2 Vehicles.
327.3 Vessels.
327.4 Aircraft.
327.5 Swimming.
327.6 Picnicking.
327.7 Camping.
327.8 Hunting, fishing and trapping.
327.9 Sanitation.
327.10 Fires.
327.11 Control of animals.
327.12 Restrictions.
327.13 Explosives, firearms, other weapons and fireworks.
327.14 Public property.
327.15 Abandonment and impoundment of personal property.
327.16 Lost and found articles.
327.17 Advertisement.
327.18 Commercial activities.
327.19 Permits.
327.20 Unauthorized structures.
327.21 Special events.
327.22 Unauthorized occupation.
327.23 Recreation use fees.
327.24 Interference with Government employees.
327.25 Violations of rules and regulations.
327.26 State and local laws.
327.27—327.29 [Reserved]
327.30 Shoreline Management on Civil Works Projects.
327.31 Shoreline Management fee schedule.

AUTHORITY: The Rivers and Harbors Act of 1894, as amended and supplemented (33 U.S.C. 1); 16 U.S.C. 460d and 460l–6a.

SOURCE: 50 FR 35556, Sept. 3, 1985, unless otherwise noted.

§ 327.0 Applicability.

The regulations covered in this part 327 shall be applicable to water resource development projects, completed or under construction, administered by the Chief of Engineers, and to those portions of jointly administered water resource development projects which are under the administrative jurisdiction of the Chief of Engineers. All other Federal, State and local laws and regulations remain in full force and effect where applicable to those water resource development projects.

§ 327.1 Policy.

(a) It is the policy of the Secretary of the Army, acting through the Chief of Engineers, to manage the natural, cultural and developed resources of each project in the public interest, providing the public with safe and healthful recreational opportunities while protecting and enhancing these resources.

(b) Unless otherwise indicated herein, the term *District Engineer* shall include the authorized representatives of the District Engineer.

(c) The term *project* or *water resource development project* refers to the water areas of any water resource development project administered by the Chief

of Engineers, without regard to ownership of underlying land, to all lands owned in fee by the Federal Government and to all facilities therein or thereon of any such water resource development project.

(d) All water resource development projects open for public use shall be available to the public without regard to sex, race, color, creed, age, nationality or place of origin. No lessee, licensee, or concessionaire providing a service to the public shall discriminate against any person because of sex, race, creed, color, age, nationality or place of origin in the conduct of the operations under the lease, license or concession contract.

(e) In addition to the regulations in this part 327, all applicable Federal, state and local laws and regulations remain in full force and effect on project lands or waters which are outgranted by the District Engineer by lease, license or other written agreement.

(f) The regulations in this part 327 shall be deemed to apply to those lands and waters which are subject to treaties and Federal laws and regulations concerning the rights of Indian Nations and which lands and waters are incorporated, in whole or in part, within water resource development projects administered by the Chief of Engineers, to the extent that the regulations in this part 327 are not inconsistent with such treaties and Federal laws and regulations.

(g) Any violation of any section of this part 327 shall constitute a separate violation for each calendar day in which it occurs.

(h) For the purposes of this part 327, the owner of any unattended vehicle, vessel or aircraft as described herein shall be presumed to be responsible for its use on project property. Unless proven otherwise, such presumption will be sufficient to issue a citation for the violation of regulations applicable to the use of such vehicle, vessel or aircraft as provided for in § 327.25, Violation of Rules and Regulations.

§ 327.2 Vehicles.

(a) This section pertains to all vehicles, including, but not limited to, automobiles, trucks, motorcycles, mini-bikes, snowmobiles, dune buggies, all-terrain vehicles and trailers, campers, bicycles or any other such equipment.

(b) Vehicles shall not be parked in violation of posted restrictions, or in such a manner as to obstruct or impede normal or emergency traffic movement or the parking of other vehicles, create a safety hazard, or endanger any person, project property or environmental feature. Vehicles so parked are subject to removal and impoundment at the owner's expense.

(c) The operation and/or parking of a vehicle off authorized roadways is prohibited except at locations and times designated by the District Engineer. Taking any vehicle through, around or beyond a restrictive sign, recognizable barricade, fence or traffic control barrier is prohibited.

(d) Vehicles shall be operated only in accorance with posted regulations and applicable Federal, state and local laws, which shall be enforced by authorized enforcement officials.

(e) No person shall operate any vehicle in a careless, negligent or reckless manner so as to endanger any person, project property or environmental feature.

(f) At developed recreation areas, vehicles shall be used only to enter or leave the area or individual sites or facilities unless otherwise posted.

(g) Except as authorized by the District Engineer, no person shall operate any motorized vehicle without a proper and effective exhaust muffler as defined by state and local laws, or with an exhaust muffler cutout open, or in any other manner which renders the exhaust muffler ineffective in muffling the sound of engine exhaust.

§ 327.3 Vessels.

(a) This section pertains to all vessels or watercraft, including, but not limited to, powerboats, cruisers, houseboats, sailboats, rowboats, canoes, kayaks, jetskis and any other such equipment capable of navigation on water, whether in motion or at rest.

(b) The placement and/or operation of any vessel or watercraft for a fee or profit upon project waters or lands is prohibited except as authorized by permit, lease, license, or concession contract with the Department of the

Army. This paragraph (§327.3(b)) shall not apply to the operation of commercial tows or passenger carrying vessels not based at a Corps project which utilize project waters as a link in continous transit over navigable waters of the United States.

(c) Vessels or other watercraft may be operated on the project waters, except in prohibited or restricted areas, in accordance with posted regulations, including buoys, and applicable Federal, state and local laws, as regulated by authorized enforcement officials. All vessels or watercraft so required by applicable Federal, state and local laws shall display an appropriate registration on board whenever the vessel is operated on project waters.

(d) The operation of vessels or other watercraft in a careless, negligent or reckless manner so as to endanger any property or person (including the operator and/or user(s) of the vessel or watercraft) is prohibited.

(e) All vessels, when in use, shall have safety equipment, including personal floatation devices, on board in compliance with U.S. Coast Guard boating safety requirements (Coast Guard Pamphlet CG–290; 46 CFR parts 25, 30; 33 CFR part 175) and in compliance with boating safety laws issued and enforced by the state in which the vessel is being operated.

(f) Unless otherwise permitted by Federal, state or local law, vessels or other watercraft, while moored in commercial facilities, community or corporate docks, or at any fixed or permanent mooring point, may only be used for overnight occupancy when such use is incidental to recreational boating. Vessels or other watercraft are *not* to be used as a place of habitation or residence.

(g) Water skis, parasails, ski-kites and similar devices are permitted in nonrestricted areas except that they may not be used in a careless, negligent, or reckless manner so as to endanger any property or person (including the user and/or operator of the towing vessel).

(h) All vessels when not in actual use shall be removed from project lands and water unless securely moored or stored at designated areas approved by the District Engineer. The placing of floating or stationary mooring facilities on, adjacent to, or interfering with a buoy, channel marker or other navigational aid is prohibited.

(i) The use at a project of any vessel not constructed or maintained in compliance with the standards and requirements established by the Federal Safe Boating Act of 1971 (Pub. L 92–75, 85 Stat. 213), or promulgated pursuant to such act, is prohibited.

(j) Except as authorized by the District Engineer, no person shall operate any vessel or watercraft without a proper and effective exhaust muffler as defined by State and local laws, or with an exhaust muffler cutout open, or in any other manner which renders the exhaust muffler ineffective in muffling the sound of engine exhaust.

§327.4 Aircraft.

(a) This section pertains to all aircraft including, but not limited to, airplanes, seaplanes, helicopters, ultralight aircraft, motorized hang gliders, hot air balloons, any non-powered flight devices or any other such equipment.

(b) The operation of aircraft on project lands at locations other than those designated by the District Engineer is prohibited. This provision shall not be applicable to aircraft engaged on official business of Federal, state or local governments or law enforcement agencies, aircraft used in emergency rescue in accordance with the directions of the District Engineer or aircraft forced to land due to circumstances beyond the control of the operator.

(c) No person shall operate any aircraft while on or above project waters or project lands in a careless, negligent or reckless manner so as to endanger any person or property.

(d) Nothing in this section (§327.4) bestows authority to deviate from rules and regulations or prescribed standards of the appropriate State Aeronautical Agency, or the Federal Aviation Administration, including, but not limited to, regulations and standards concerning pilot certifications or ratings, and airspace requirements.

(e) Except in extreme emergencies threatening human life or serious property loss, the air delivery of any person, material or equipment by parachute, helicopter or other means onto project lands or waters without written permission of the District Engineer is prohibited.

(f) In addition to the above provisions, seaplanes, as defined below, are subject to the following restrictions:

(1) Such use is limited to aircraft utilized for water landings and takeoff, herein called seaplanes, at the risk of the owner, operator and passenger(s).

(2) Seaplane operations contrary to the prohibitions or restrictions established by the District Engineer (pursuant to part 328 of title 36) are prohibited. The responsibility to ascertain whether seaplane operations are prohibited or restricted is incumbent upon the person(s) contemplating the use of, or using, such waters.

(3) All operations of seaplanes while upon project waters shall be in accordance with marine rules of the road for power boats or vessels and § 327.3 Vessels.

(4) Seaplanes on project waters and lands in excess of 24 hours shall be securely moored at mooring facilities and at locations permitted by the District Engineer. Seaplanes may be temporarily moored on project waters and lands, except in areas prohibited by the District Engineer, for periods less than 24 hours providing that (i) the mooring is safe, secure, and accomplished so as not to damage the rights of the Government or members of the public and (ii) the operator remains in the vicinity of the seaplane and reasonably available to relocate the seaplane if necessary.

(5) Commercial operation of seaplanes from project waters is prohibited without written approval of the District Engineer following consultation with and necessary clearance from the Federal Aviation Administration (FAA) and other appropriate public authorities and affected interests.

(6) Seaplanes may not be operated at Corps projects between sunset and sunrise unless adequate lighting and supervision approved by the District Engineer are available.

§ 327.5 Swimming.

(a) Swimming, diving, snorkling or scuba diving at one's own risk is permitted, except at launching sites, designated mooring points and other areas so designated by the District Engineer. Diving or jumping from bridges or other structures which cross project waters is prohibited.

(b) An international diving flag must be displayed during underwater activities.

§ 327.6 Picnicking.

Picnicking and related day-use activities are permitted, except in those areas where prohibited by the District Engineer.

§ 327.7 Camping.

(a) Camping is permitted only at sites and/or areas designated by the District Engineer.

(b) Camping at one or more campsites at any one water resource project for a period longer than 14 days during any 30-consecutive-day period is prohibited without the written permission of the District Engineer.

(c) The unauthorized placement of camping equipment or other items on a campsite and/or personal appearance without overnight occupancy at a campsite for the purpose of reserving a designated campsite for future occupancy is prohibited.

(d) The digging or leveling of any ground or the construction of any structure without written permission of the District Engineer is prohibited.

§ 327.8 Hunting, fishing, and trapping.

Hunting, fishing, and trapping are permitted except in areas where prohibited by the District Engineer. All Federal, state and local laws governing these activities apply on project lands and waters, as regulated by authorized enforcement officials.

§ 327.9 Sanitation.

(a) Garbage, trash, rubbish, litter, or any other waste material or waste liquid generated on the project and incidental to authorized recreational activities shall be either removed from the project or deposited in receptacles

provided for that purpose. The improper disposal of such wastes, human and animal waste included, on the project is prohibited.

(b) It is a violation to bring onto a project any household or commercial garbage, trash, rubbish, debris, dead animals or litter of any kind for disposal or dumping without the written permission of the District Engineer.

(c) The spilling, pumping or other discharge of contaminants, pollutants or other wastes, including, but not limited to, human or animal waste, petroleum, industrial and commercial products and by-products, on project lands or into project waters is prohibited.

(d) Campers, picnickers, and all other persons using a water resource development project shall keep their sites free of trash and litter during the period of occupancy and shall remove all personal equipment and clean their sites upon departure.

(e) The discharge or placing of sewage, galley waste, garbage, refuse, or pollutants into the project waters from any vessel or watercraft is prohibited.

§ 327.10 Fires.

(a) Gasoline and other fuels, except that which is contained in storage tanks of vehicles, vessels, camping equipment, or hand portable containers designed for such purpose, shall not be carried onto or stored on the project without written permission of the District Engineer.

(b) Fires shall be confined to those areas designated by the District Engineer, and shall be contained in fireplaces, grills, or other facilities designated for this purpose. Fires shall not be left unattended and must be completely extinguished prior to departure. The burning of materials that produce toxic fumes, including, but not limited to, tires, plastic or treated wood products is prohibited.

(c) Improper disposal of lighted smoking materials, matches or other burning material is prohibited.

§ 327.11 Control of animals.

(a) No person shall bring or allow dogs, cats, or other pets into developed recreation areas unless penned, caged, on a leash under 6 feet in length, or otherwise physically restrained. No person shall allow animals to impede or restrict otherwise full and free use of project lands and waters by the public. All animals and pets are prohibited in swimming beaches. Animals and pets, except properly trained animals assisting the handicapped (such as seeing-eye dogs), are prohibited in sanitary facilities or other areas so designated by the District Engineer. Unclaimed or unattended animals are subject to immediate impoundment and removal in accordance with state and local laws.

(b) Persons bringing or allowing pets in designated public use areas shall be responsible for proper removal and disposal, in sanitary facilities, of any waste produced by these animals.

(c) No person shall bring or allow horses, cattle, or other livestock in camping, picnicking, swimming or other recreation areas except in areas designated by the District Engineer.

(d) Ranging, grazing, watering or allowing livestock on project lands and waters is prohibited except when authorized by lease, license or other written agreement with the District Engineer.

(e) Unauthorized livestock are subject to impoundment and removal in accordance with Federal, state and local laws.

(f) Any animal impounded under the provisions of this section may be confined at a location designated by the District Engineer, who may assess a reasonable impoundment fee. This fee shall be paid before the impounded animal is returned to its owner(s).

§ 327.12 Restrictions.

(a) The District Engineer may establish and post a schedule of visiting hours and/or restrictions on the public use of a project or portion of a project. The District Engineer may close or restrict the use of a project or portion of a project when necessitated by reason of public health, public safety, maintenance, or other reasons in the public interest. Entering or using a project in a manner which is contrary to the schedule of visiting hours, closures or restrictions is prohibited.

(b) Quiet shall be maintained in all public use areas between the hours of

10 p.m. and 6 a.m., or those hours designated by the District Engineer. Excessive noise during such times which unreasonably disturbs persons is prohibited.

(c) Any act or conduct by any person which interferes with, impedes or disrupts the use of the project or impairs the safety of another person is prohibited. Individuals who are boisterous, rowdy, disorderly or otherwise disturb the peace on project lands or waters may be requested to leave the project.

(d) The operation or use of any audio or other noise producing device including, but not limited to, radios, televisions, or musical instruments and motorized equipment, including vessels or vehicles, in such a manner as to unreasonably annoy or endanger persons at any time or exceed state or local laws governing noise levels from motorized equipment is prohibited.

§ 327.13 Explosives, firearms, other weapons and fireworks.

The possession of loaded firearms, ammunition, loaded projectile firing devices, bows and arrows, crossbows, explosives or explosive devices of any kind, including fireworks, is prohibited unless:

(a) In the possession of a Federal, state or local law enforcement officer;

(b) Being used for hunting or fishing as permitted under § 327.8, with devices being unloaded when transported to, from or between hunting and fishing sites;

(c) Being used at authorized shooting ranges; or

(d) Written permission has been received from the District Engineer.

§ 327.14 Public property.

(a) Destruction, injury, defacement, removal or any alteration of public property including, but not limited to, developed facilities, natural formations, mineral deposits, historical and archaeological features, and vegetative growth, is prohibited except when in accordance with written pemission of the District Engineer.

(b) Cutting or gathering of trees or parts of trees and/or the removal of wood from project lands is prohibited without written permission of the District Engineer.

(c) Gathering of dead wood on the ground for use in designated recreation areas as firewood is permitted.

§ 327.15 Abandonment and impoundment of personal property.

(a) Personal property of any kind shall not be abandoned, stored or left unattended upon project lands or waters. After a period of 24 hours, or at any time after a posted closure hour in a public use area, unattended personal property shall be presumed to be abandoned and may be impounded and stored at a storage point designated by the District Engineer, who may assess a reasonable impoundment fee. Such fee shall be paid before the impounded property is returned to its owner.

(b) The District Engineer shall, by public or private sale or otherwise, dispose of all lost, abandoned or unclaimed personal property that comes into Government custody or control. However, property may not be disposed of until diligent effort has been made to find the owner, heirs, next of kin or legal representative(s). If the owner, heirs, next of kin or legal representative(s) are determined but not found, the property may not be disposed of until the expiration of 120 days after the date when notice, giving the time and place of the intended sale or other disposition, has been sent by certified or registered mail to that person at the last known address. When diligent efforts to determine the owner, heirs, next of kin or legal representative(s) are unsuccessful, the property may be disposed of without delay except that if it has a fair market value of $25 or more the property may not be disposed of until 90 days after the date it is received at the storage point designated by the District Engineer. The net proceeds from the sale of property shall be covered into the Treasury of the United States as miscellaneous receipts.

(c) Personal property placed on Federal lands or waters adjacent to a private residence and/or developments of any private nature for more than 24 hours without permssion of the District Engineer shall be presumed to have been abandoned and, unless proven otherwise, such presumption will be sufficient to issue a citation as provided for in § 327.25.

§ 327.16 Lost and found articles.

All articles found shall be deposited by the finder at the Resource Manager's office or with a ranger. All such articles shall be disposed of in accordance with the procedures set forth in § 327.15.

§ 327.17 Advertisement.

Advertising by the use of billboards, signs, markers, audio devices, handbills, circulars, posters, or any other means whatsoever, is prohibited without written permission of the District Engineer. Vessels and vehicles with semipermanent or permanent painted or installed signs are exempt as long as they are used for authorized recreational activities and comply with all other rules and regulations pertaining to vessels and vehicles.

§ 327.18 Commercial activities.

The engaging in or solicitation of business without the express written permission of the District Engineer is prohibited.

§ 327.19 Permits.

(a) It shall be a violation of these regulations to refuse to or fail to comply with the fee requirements or other terms or conditions of any permit issued under the provisions of this part 327.

(b) Permits for floating structures (issued under the authority of § 327.30) of any kind on/in waters of water resources development projects, whether or not such waters are deemed navigable waters of the United States but where such waters are under the management of the Corps of Engineers, shall be issued at the discretion of the District Engineer under the authority of this regulation. District Engineers will delineate those portions of the navigable waters of the United States where this provision is applicable and post notices of this designation in the vicinity of the appropriate Resource Manager's office.

(c) Permits for nonfloating structures (issued under the authority of § 327.30) of any kind constructed, placed in or affecting waters of water resource development projects where such waters are deemed navigable waters of the U.S. shall be issued under the provisions of section 10 of the Act approved March 3, 1899 (33 U.S.C. 403). If a discharge of dredged or fill material in these waters is involved, a permit is required under section 404 of the Clean Water Act (33 U.S.C. 1344). (See 33 CFR parts 320–330).

(d) Permits for nonfloating structures (issued under the authority of § 327.30) of any kind in waters of water resource development projects, where such waters are under the management of the Corps of Engineers and where such waters are not deemed navigable waters of the United States shall be issued as set forth in paragraph (b) of this section. If a discharge of dredged or fill material into any water of the United States is involved, a permit is required under Section 404 of the Clean Water Act (33 U.S.C. 1344) (See 33 CFR parts 320–330). Certification may be required pursuant to section 401 of the Clean Water Act (33 U.S.C. 1341).

§ 327.20 Unauthorized structures.

The construction, placement, or existence of any structure (including, but not limited to, roads, trails, signs or landscape features) of any kind under, upon, in or over the project lands or waters is prohibited unless a permit, lease, license or other appropriate written agreement has been issued by the District Engineer. The design, construction, placement, existence or use of structures in violation of the terms of the permit, lease, license or other written agreement is prohibited. The government shall not be liable for the loss of, or damage to, any private structures, whether authorized or not, placed on project lands or waters. Unauthorized structures are subject to summary removal or impoundment by the District Engineer.

§ 327.21 Special events.

(a) Special events including, but not limited to, water carnivals, boat regattas, music festivals, dramatic presentations or other special recreation programs are prohibited unless written permission has been granted by the District Engineer. An appropriate fee may be charged under the authority of § 327.23.

(b) The public shall not be charged any fee by the sponsor of such event unless the District Engineer has approved in writing (and the sponsor has properly posted) the proposed schedule of fees. The District Engineer shall have authority to revoke permission and require removal of any equipment upon failure of the sponsor to comply with terms and conditions of the permit/permission or the regulations in this part 327.

§ 327.22 Unauthorized occupation.

(a) Occupying any lands, buildings, vessels or other facilities within water resource development projects for the purpose of maintaining same as a full- or part-time residence without the written permission of the District Engineer is prohibited. The provisions of this section shall not apply to the occupation of lands for the purpsose of camping, in accordance with the provisions of § 327.7.

(b) Use of project lands or waters for agricultural purposes is prohibited except when in compliance with terms and conditions authorized by lease, license or other written agreement issued by the District Engineer.

§ 327.23 Recreation use fees.

(a) In accordance with 16 U.S.C. 4601, the Corps of Engineers is required to collect special recreation use fees and/or special permit fees for the use of specialized sites, facilities, equipment or services related to outdoor recreation furnished at Federal expense.

(b) All use fees shall be fair and equitable and will be based on the following criteria (as contained in the Land and Water Conservation Fund Act of 1965, Pub. L. 88–578, as amended):

(1) The direct and indirect amount of Federal expenditure.

(2) The benefit to the recipient.

(3) The public policy or interest served.

(4) The comparable recreation fees charged by other Federal and non-Federal public agencies and the private sector within the service area of the management unit at which the fee is charged.

(5) The economic and administrative feasibility of fee collection.

(6) The extent of regular maintenance required.

(7) Other pertinent factors.

Based upon the above criteria, it shall be the policy of the Chief of Engineers to publish in the FEDERAL REGISTER, as a general notice document, the established range of fees for specialized sites, facilities, equipment or services whenever such fees are adjusted.

(c) Where such fees are charged, the District Engineer shall insure that clear notice of fee requirements is prominently posted at each area, and at appropriate locations therein and that the notice be included in publications distributed at such areas. Failure to pay authorized recreation use fees as established pursuant to Pub. L. 88–578, 78 Stat. 897, as amended (16 U.S.C. 4601-6a), is prohibited and is punishable by a fine of not more than $100.

(d) Any Golden Age or Golden Access Passport permittee shall be entitled, upon presentation of such a permit, to utlilize special recreation facilities at a rate of 50 percent off the established use fee at federally operated areas.

(e) At each Corps lake or reservoir where camping is permitted, the District Engineer will provide at least one primitive campground, containing designated campsites, sanitary facilities and vehicular access, where no fees will be charged.

§ 327.24 Interference with Government employees.

(a) It is a Federal crime pursuant to the provisions of sections 1114 and 111 of title 18 U.S.C., to forcibly assault, resist, oppose, impede, intimidate, or interfere with any civilian official or employee of the U.S. Army Corps of Engineers engaged in the performance of his or her official duties, or on account of the performance of his or her official duties. Such actions or interference directed against a Federal employee while carrying out these regulations are also a violation of these regulations and may be a state crime pursuant to the laws of the state where they occur.

(b) Failure to comply with a lawful order issued by a Federal employee acting pursuant to these regulations shall be considered as interference with that employee while engaged in the

performance of their official duties. Such interference with a Federal employee includes failure to provide a correct name, address or other identification upon request of the Federal employee, when that employee is authorized by the District Engineer to issue citations in the performance of the employees official duties.

§ 327.25 Violation of rules and regulations.

(a) Any person who violates the provisions of these regulations, other than for a failure to pay authorized recreation use fees as separately provided for in § 327.23, may be punished by a fine of not more than $500 or imprisonment for not more than six months or both and may be tried and sentenced in accordance with the provisions of section 3401 of title 18 U.S.C. Persons designated by the District Engineer shall have the authority to issue a citation for violation of these regulations, requiring the appearance of any person charged with the violation to appear before the United States Magistrate within whose jurisdiction the affected water resources development project is located. (16 U.S.C. 460d).

(b) Any person who commits an act against any official or employee of the U.S. Army Corps of Engineers that is a crime under the provisions of section 1114 or section 111 of title 18 U.S.C. or under provisions of pertinent state law may be tried and sentenced as further provided in Federal or state law, as the case may be.

§ 327.26 State and local laws.

Except as otherwise provided herein or by Federal law or regulation, state and local laws and ordinances shall apply on project lands and waters. This includes, but is not limited to, state and local laws and ordinances governing:

(a) Operation and use of motor vehicles, vessels, and aircraft;

(b) Hunting, fishing and trapping;

(c) Use of firearms or other weapons;

(d) Civil disobedience and criminal acts; and,

(e) Littering, sanitation and pollution.

These state and local laws and ordinances are enforced by those state and local enforcement agencies established and authorized for that purpose.

§§ 327.27—327.29 [Reserved]

§ 327.30 Shoreline Management on Civil Works Projects.

(a) *Purpose.* The purpose of this regulation is to provide policy and guidance on management of shorelines of Civil Works projects where 36 CFR part 327 is applicable.

(b) *Applicability.* This regulation is applicable to all field operating agencies with Civil Works responsibilities except when such application would result in an impingement upon existing Indian rights.

(c) *References.* (1) Section 4, 1944 Flood Control Act, as amended (16 U.S.C. 460d).

(2) The Rivers and Harbors Act of 1894, as amended and supplemented (33 U.S.C. 1)

(3) Section 10, River and Harbor Act of 1899 (33 U.S.C. 403).

(4) National Historic Preservation Act of 1966 (Pub. L. 89–665; 80 Stat. 915) as amended (16 U.S.C. 470 *et seq.*).

(5) The National Environmental Policy Act of 1969 (42 U.S.C. 4321, *et seq.*).

(6) The Clean Water Act (33 U.S.C. 1344, *et seq.*).

(7) The Water Resources Development Act of 1986 (Pub. L. 99–662).

(8) Title 36, chapter III, part 327, Code of Federal Regulations, ''Rules and Regulations Governing Public Use of Water Resource Development Projects Administered by the Chief of Engineers.''

(9) Executive Order 12088 (13 Oct. 78).

(10) 33 CFR parts 320–330, ''Regulatory Programs of the Corps of Engineers.''

(11) ER 1130–2–400, ''Management of Natural Resources and Outdoor Recreation at Civil Works Water Resource Projects.''

(12) EM 385–1–1, ''Safety and Health Requirements Manual.''

(d) *Policy.* (1) It is the policy of the Chief of Engineers to protect and manage shorelines of all Civil Works water resource development projects under Corps jurisdiction in a manner which will promote the safe and healthful use of these shorelines by the public while maintaining environmental safeguards to ensure a quality resource for use by

the public. The objectives of all management actions will be to achieve a balance between permitted private uses and resource protection for general public use. Public pedestrian access to and exit from these shorelines shall be preserved. For projects or portions of projects where Federal real estate interest is limited to easement title only, management actions will be appropriate within the limits of the estate acquired.

(2) Private shoreline uses may be authorized in designated areas consistent with approved use allocations specified in Shoreline Management Plans. Except to honor written commitments made prior to publication of this regulation, private shoreline uses are not allowed on water resource projects where construction was initiated after December 13, 1974, or on water resource projects where no private shoreline uses existed as of that date. Any existing permitted facilities on these projects will be grandfathered until the facilities fail to meet the criteria set forth in § 327.30(h).

(3) A Shoreline Management Plan, as described in § 327.30(e), will be prepared for each Corps project where private shoreline use is allowed. This plan will honor past written commitments. The plan will be reviewed at least once every five years and revised as necessary. Shoreline uses that do not interfere with authorized project purposes, public safety concerns, violate local norms or result in significant environmental effects should be allowed unless the public participation process identifies problems in these areas. If sufficient demand exists, consideration should be given to revising the shoreline allocations (e.g. increases/decreases). Maximum public participation will be encouraged as set forth in § 327.30(e)(6). Except to honor written commitments made prior to the publication of this regulation, shoreline management plans are not required for those projects where construction was initiated after December 13, 1974, or on projects not having private shoreline use as of that date. In that case, a statement of policy will be developed by the district commander to present the shoreline management policy. This policy statement will be subject to the approval of the division commander. For projects where two or more agencies have jurisdiction, the plan will be cooperatively prepared with the Corps as coordinator.

(4) Where commercial or other public launching and/or moorage facilities are not available within a reasonable distance, group owned mooring facilities may be allowed in Limited Development Areas to limit the proliferation of individual facilities. Generally only one permit will be necessary for a group owned mooring facility with that entity, if incorporated, or with one person from the organization designated as the permittee and responsible for all moorage spaces within the facility. No charge may be made for use of any permitted facility by others nor shall any commercial activity be engaged in thereon.

(5) The issuance of a private shoreline use permit does not convey any real estate or personal property rights or exclusive use rights to the permit holder. The public's right of access and use of the permit area must be maintained and preserved. Owners of permitted facilities may take necessary precautions to protect their property from theft, vandalism or trespass, but may in no way preclude the public right of pedestrian or vessel access to the water surface or public land adjacent to the facility.

(6) Shoreline Use Permits will only be issued to individuals or groups with legal right of access to public lands.

(e) *Shoreline Management Plan*—

(1) *General.* The policies outlined in § 327.30(d) will be implemented through preparation of Shoreline Management Plans, where private shoreline use is allowed.

(2) *Preparation.* A Shoreline Management Plan is prepared as part of the Operational Management Plan. A moratorium on accepting applications for new permits may be placed in effect from the time an announcement of creation of a plan or formal revision of a plan is made until the action is completed.

(3) *Approval.* Approval of Shoreline Management Plans rests with division commanders. After approval, one copy of each project Shoreline Management Plan will be forwarded to HQUSACE

(CECW–ON) WASH DC 20314–1000. Copies of the approved plan will also be made available to the public.

(4) *Scope and Format.* The Shoreline Management Plan will consist of a map showing the shoreline allocated to the uses listed in § 327.30(e)(6), related rules and regulations, a discussion of what areas are open or closed to specific activities and facilities, how to apply for permits and other information pertinent to the Corps management of the shoreline. The plan will be prepared in sufficient detail to ensure that it is clear to the public what uses are and are not allowed on the shoreline of the project and why. A process will be developed and presented in the Shoreline Management Plan that prescribes a procedure for review of activities requested but not specifically addressed by the Shoreline Management Plan.

(5) *Shoreline Allocation.* The entire shoreline will be allocated within the classifications below and delineated on a map. Any action, within the context of this rule, which gives a special privilege to an individual or group of individuals on land or water at a Corps project, that precludes use of those lands and waters by the general public, is considered to be private shoreline use. Shoreline allocations cover that land and/or water extending from the edge of the water and waterward with the exception of allocations for the purpose of vegetation modification which extends landward to the project boundary. These allocations should complement, but certainly not contradict, the land classifications in the project master plan. A map of sufficient size and scale to clearly display the shoreline allocations will be conspicuously displayed or readily available for viewing in the project administration office and will serve as the authoritative reference. Reduced or smaller scale maps may be developed for public dissemination but the information contained on these must be identical to that contained on the display map in the project administration office. No changes will be made to these maps except through the formal update process. District commanders may add specific constraints and identify areas having unique characteristics during the plan preparation, review, or updating process in addition to the allocation classifications described below.

(i) *Limited Development Areas.* Limited Development Areas are those areas in which private facilities and/or activities may be allowed consistent with § 327.30(h) and appendix A. Modification of vegetation by individuals may be allowed only following the issuance of a permit in accordance with appendix A. Potential low and high water conditions and underwater topography should be carefully evaluated before shoreline is allocated as Limited Development Area.

(ii) *Public Recreation Areas.* Public Recreation Areas are those areas designated for commercial concessionaire facilities, Federal, state or other similar public use. No private shoreline use facilities and/or activities will be permitted within or near designated or developed public recreation areas. The term ''near'' depends on the terrain, road system, and other local conditions, so actual distances must be established on a case by case basis in each project Shoreline Management Plan. No modification of land forms or vegetation by private individuals or groups of individuals is permitted in public recreation areas.

(iii) *Protected Shoreline Areas.* Protected Shoreline Areas are those areas designated to maintain or restore aesthetic, fish and wildlife, cultural, or other environmental values. Shoreline may also be so designated to prevent development in areas that are subject to excessive siltation, erosion, rapid dewatering, or exposure to high wind, wave, or current action and/or in areas in which development would interfere with navigation. No Shoreline Use Permits for floating or fixed recreation facilities will be allowed in protected areas. Some modification of vegetation by private individuals, such as clearing a narrow meandering path to the water, or limited mowing, may be allowed only following the issuance of a permit if the resource manager determines that the activity will not adversely impact the environment or physical characteristics for which the area was designated as protected. In making this determination the effect

on water quality will also be considered.

(iv) *Prohibited Access Areas.* Prohibited Access Areas are those in which public access is not allowed or is restricted for health, safety or security reasons. These could include hazardous areas near dams, spillways, hydro-electric power stations, work areas, water intake structures, etc. No shoreline use permits will be issued in Prohibited Access Areas.

(6) *Public Participation.* District commanders will ensure public participation to the maximum practicable extent in Shoreline Management Plan formulation, preparation and subsequent revisions. This may be accomplished by public meetings, group workshops, open houses or other public involvement techniques. When master plan updates and preparation of the Shoreline Management Plans are concurrent, public participation may be combined and should consider all aspects of both plans, including shoreline allocation classifications. Public participation will begin during the initial formulation stage and must be broad-based to cover all aspects of public interest. The key to successful implementation is an early and continual public relations program. Projects with significant numbers of permits should consider developing computerized programs to facilitate exchange of information with permittees and to improve program efficiency. Special care will be taken to advise citizen and conservation organizations; Federal, state and local natural resource management agencies; Indian Tribes; the media; commercial concessionaires; congressional liaisons; adjacent landowners and other concerned entities during the formulation of Shoreline Management Plans and subsequent revisions. Notices shall be published prior to public meetings to assure maximum public awareness. Public notices shall be issued by the district commander allowing for a minimum of 30 days for receipt of written public comment in regard to the proposed Shoreline Management Plan or any major revision thereto.

(7) *Periodic Review.* Shoreline Management Plans will be reviewed periodically, but no less often than every five years, by the district commander to determine the need for update. If sufficient controversy or demand exists, consideration should be given, consistent with other factors, to a process of reevaluation of the shoreline allocations and the plan. When changes to the Shoreline Management Plan are needed, the plan will be formally updated through the public participation process. Cumulative environmental impacts of permit actions and the possibility of preparing or revising project NEPA documentation will be considered. District commanders may make minor revisions to the Shoreline Management Plan when the revisions are consistent with policy and funds for a complete plan update are not available. The amount and type of public involvement needed for such revision is at the discretion of the district commander.

(f) *Instruments for Shoreline Use.* Instruments used to authorize private shoreline use facilities, activities or development are as follows:

(1) *Shoreline Use Permits.* (i) Shoreline Use Permits are issued and enforced in accordance with provisions of 36 CFR 327.19.

(ii) Shoreline Use Permits are required for private structures/activities of any kind (except boats) in waters of Civil Works projects whether or not such waters are deemed navigable and where such waters are under the primary jurisdiction of the Secretary of the Army and under the management of the Corps of Engineers.

(iii) Shoreline Use Permits are required for non-floating structures on waters deemed commercially non-navigable, when such waters are under management of the Corps of Engineers.

(iv) Shoreline Use Permits are also required for land vegetation modification activities which do not involve disruption to land form.

(v) Permits should be issued for a term of five years. To reduce administration costs, one year permits should be issued only when the location or nature of the activity requires annual reissuance.

(vi) Shoreline Use Permits for erosion control may be issued for the life or period of continual ownership of the structure by the permittee and his/her legal spouse.

(2) *Department of the Army Permits.* Dredging, construction of fixed structures, including fills and combination fixed-floating structures and the discharge of dredged or fill material in waters of the United States will be evaluated under authority of section 10, River and Harbor Act of 1899 (33 U.S.C. 403) and section 404 of the Clean Water Act (33 U.S.C. 1344). Permits will be issued where appropriate.

(3) *Real Estate Instruments.* Commercial development activities and activities which involve grading, cuts, fills, or other changes in land form, or establishment of appropriate land-based support facilities required for private floating facilities, will continue to be covered by a lease, license or other legal grant issued through the appropriate real estate element. Shoreline Management Plans should identify the types of activities that require real estate instruments and indicate the general process for obtaining same. Shoreline Use Permits are not required for facilities or activities covered by a real estate instrument.

(g) *Transfer of Permits.* Shoreline Use Permits are non-transferable. They become null and void upon sale or transfer of the permitted facility or the death of the permittee and his/her legal spouse.

(h) *Existing Facilities Now Under Permit.* Implementation of a Shoreline Management Plan shall consider existing permitted facilities and prior written Corps commitments implicit in their issuance. Facilities or activities permitted under special provisions should be identified in a way that will set them apart from other facilities or activities.

(1) Section 6 of Pub. L. 97–140 provides that no lawfully installed dock or appurtenant structures shall be required to be removed prior to December 31, 1989, from any Federal water resources reservoir or lake project administered by the Secretary of the Army, acting through the Chief of Engineers, on which it was located on December 29, 1981, if such property is maintained in usable condition, and does not occasion a threat to life or property.

(2) In accordance with section 1134(d) of Pub. L. 99–662, any houseboat, boathouse, floating cabin or lawfully installed dock or appurtenant structures in place under a valid shoreline use permit as of November 17, 1986, cannot be forced to be removed from any Federal water resources project or lake administered by the Secretary of the Army on or after December 31, 1989, if it meets the three conditions below except where necessary for immediate use for public purposes or higher public use or for a navigation or flood control project.

(i) Such property is maintained in a usable and safe condition,

(ii) Such property does not occasion a threat to life or property, and

(iii) The holder of the permit is in substantial compliance with the existing permit.

(3) All such floating facilities and appurtenances will be formally recognized in an appropriate Shoreline Management Plan. New permits for these permitted facilities will be issued to new owners. If the holder of the permit fails to comply with the terms of the permit, it may be revoked and the holder required to remove the structure, in accordance with the terms of the permit as to notice, time, and appeal.

(i) *Facility Maintenance.* Permitted facilities must be operated, used and maintained by the permittee in a safe, healthful condition at all times. If determined to be unsafe, the resource manager will establish together with the permittee a schedule, based on the seriousness of the safety deficiency, for correcting the deficiency or having it removed, at the permittee's expense. The applicable safety and health prescriptions in EM 385–1–1 should be used as a guide.

(j) *Density of Development.* The density of private floating and fixed recreation facilities will be established in the Shoreline Management Plan for all portions of Limited Development areas consistent with ecological and aesthetic characteristics and prior written commitments. The facility density in Limited Development Areas should, if feasible, be determined prior to the development of adjacent private property. The density of facilities will not be more than 50 per cent of the Limited Development Area in which they are

located. Density will be measured by determining the linear feet of shoreline as compared to the width of the facilities in the water plus associated moorage arrangements which restrict the full unobstructed use of that portion of the shoreline. When a Limited Development Area or a portion of a Limited Development area reaches maximum density, notice should be given to the public and facility owners in that area that no additional facilities will be allowed. In all cases, sufficient open area will be maintained for safe maneuvering of watercraft. Docks should not extend out from the shore more than one-third of the width of a cove at normal recreation or multipurpose pool. In those cases where current density of development exceeds the density level established in the Shoreline Management Plan, the density will be reduced to the prescribed level through attrition.

(k) *Permit Fees.* Fees associated with the Shoreline Use Permits shall be paid prior to issuing the permit in accordance with the provisions of § 327.30(c)(1). The fee schedule will be published separately.

APPENDIX A TO § 327.30—GUIDELINES FOR GRANTING SHORELINE USE PERMITS

1. General

a. Decisions regarding permits for private floating recreation facilities will consider the operating objectives and physical characteristics of each project. In developing Shoreline Management Plans, district commanders will give consideration to the effects of added private boat storage facilities on commercial concessions for that purpose. Consistent with established policies, new commercial concessions may be alternatives to additional limited development shoreline.

b. Permits for individually or group owned shoreline use facilities may be granted only in Limited Development Areas when the sites are not near commercial marine services and such use will not despoil the shoreline nor inhibit public use or enjoyment thereof. The installation and use of such facilities will not be in conflict with the preservation of the natural characteristics of the shoreline nor will they result in significant environmental damage. Charges will be made for Shoreline Use Permits in accordance with the separately published fee schedule.

c. Permits may be granted within Limited Development Areas for ski jumps, floats, boat moorage facilities, duck blinds, and other private floating recreation facilities when they will not create a safety hazard and inhibit public use or enjoyment of project waters or shoreline. A Corps permit is not required for temporary ice fishing shelters or duck blinds when they are regulated by a state program. When the facility or activity is authorized by a shoreline use permit, a separate real estate instrument is generally not required.

d. Group owned boat mooring facilities may be permitted in Limited Development Areas where practicable (e.g. where physically feasible in terms of access, water depths, wind protection, etc.).

2. Applications for Shoreline Use Permits

a. Applications for private Shoreline Use Permits will be reviewed with full consideration of the policies set forth in this and referenced regulations, and the Shoreline Management Plan. Fees associated with the Shoreline Use Permit shall be paid prior to issuing the permit. Plans and specifications of the proposed facility shall be submitted and approved prior to the start of construction. Submissions should include engineering details, structural design, anchorage method, and construction materials; the type, size, location and ownership of the facility; expected duration of use; and an indication of willingness to abide by the applicable regulations and terms and conditions of the permit. Permit applications shall also identify and locate any land-based support facilities and any specific safety considerations.

b. Permits will be issued by the district commander or his/her authorized representative on ENG Form 4264–R (Application for Shoreline Use Permit) (appendix B). Computer generated forms may be substituted for ENG Form 4264–R provided all information is included. The computer generated form will be designated, ''ENG Form 4264–R–E, Oct 87 (Electronic generation approved by USACE, Oct 87)''.

c. The following are guides to issuance of Shoreline Use Permits:

(1) Use of boat mooring facilities, including piers and boat (shelters) houses, will be limited to vessel or watercraft mooring and storage of gear essential to vessel or watercraft operation.

(2) Private floating recreation facilities, including boat mooring facilities shall not be constructed or used for human habitation or in a manner which gives the appearance of converting Federal public property on which the facility is located to private, exclusive use. New docks with enclosed sides (i.e. boathouses) are prohibited.

(3) No private floating facility will exceed the minimum size required to moor the owner's boat or boats plus the minimum size required for an enclosed storage locker of oars, life preservers and other items essential to

watercraft operation. Specific size limitations may be established in the project Shoreline Management Plan.

(4) All private floating recreation facilities including boat mooring facilities will be constructed in accordance with plans and specifications, approved by the resource manager, or a written certification from a licensed engineer, stating the facility is structurally safe will accompany the initial submission of the plans and specifications.

(5) Procedures regarding permits for individual facilities shall also apply to permits for non-commercial group mooring facilities.

(6) Facilities attached to the shore shall be securely anchored by means of moorings which do not obstruct the free use of the shoreline, nor damage vegetation or other natural features. Anchoring to vegetation is prohibited.

(7) Electrical service and equipment leading to or on private mooring facilities must not pose a safety hazard nor conflict with other recreational use. Electrical installations must be weatherproof and meet all current applicable electrical codes and regulations. The facility must be equipped with quick disconnect fittings mounted above the flood pool elevation. All electrical installations must conform to the National Electric Code and all state, and local codes and regulations. In those states where electricians are licensed, registered, or otherwise certified, a copy of the electrical certification must be provided to the resource manager before a Shoreline Use Permit can be issued or renewed. The resource manager will require immediate removal or disconnection of any electrical service or equipment that is not certified (if appropriate), does not meet code, or is not safely maintained. All new electrical lines will be installed underground. This will require a separate real estate instrument for the service right-of-way. Existing overhead lines will be allowed, as long as they meet all applicable electrical codes, regulations and above guidelines, to include compatibility and safety related to fluctuating water levels.

(8) Private floating recreation facilities will not be placed so as to interfere with any authorized project purposes, including navigation, or create a safety or health hazard.

(9) The district commander of his/her authorized representative may place special conditions on the permit when deemed necessary.

(10) Vegetation modification, including but not limited to, cutting, pruning, chemical manipulation, removal or seeding by private individuals is allowed only in those areas designated as Limited Development Areas or Protected Shoreline Areas. An existing (as of July 1, 1987) vegetation modification permit, within a shoreline allocation which normally would not allow vegetation modification, should be grandfathered. Permittees will not create the appearance of private ownership of public lands.

(11) The term of a permit for vegetation modification will be for five years. Where possible, such permits will be consolidated with other shoreline management permits into a single permit. The district commander is authorized to issue vegetation modification permits of less than five years for one-time requests or to aid in the consolidation of shoreline management permits.

(12) When issued a permit for vegetative modification, the permittee will delineate the government property line, as surveyed and marked by the government, in a clear but unobtrusive manner approved by the district commander and in accordance with the project Shoreline Management Plan and the conditions of the permit. Other adjoining owners may also delineate the common boundary subject to these same conditions. This delineation may include, but is not limited to, boundary plantings and fencing. The delineation will be accomplished at no cost to the government.

(13) No permit will be issued for vegetation modification in Protected Shoreline Areas until the environmental impacts of the proposed modification are assesed by the resource manager and it has been determined that no significant adverse impacts will result. The effects of the proposed modification on water quality will also be considered in making this determination.

(14) The original of the completed permit application is to be retained by the permittee. A duplicate will be retained in the resource manager's office.

3. Permit Revocation

Permits may be revoked by the district commander when it is determined that the public interest requires such revocation or when the permittee fails to comply with terms and conditions of the permit, the Shoreline Management Plan, or of this regulation. Permits for duck blinds and ice fishing shelters will be issued to cover a period not to exceed 30 days prior to and 30 days after the season.

4. Removal of Facilities

Facilities not removed when specified in the permit or when requested after termination or revocation of the permit will be treated as unauthorized structures pursuant to 36 CFR 327.20.

5. Posting of Permit Number

Each district will procure 5″ × 8″ or larger printed permit tags of light metal or plastic for posting. The permit display tag shall be posted on the facility and/or on the land area covered by the permit, so that it can be visually checked, with ease in accordance with

instructions provided by the resource manager. Facilities or activities permitted under special provisions should be identified in a way that will set apart from other facilities or activities.

APPENDIX B TO § 327.30—APPLICATION FOR SHORELINE USE PERMIT [RESERVED]

APPENDIX C TO § 327.30—SHORELINE USE PERMIT CONDITIONS

1. This permit is granted solely to the applicant for the purpose described on the attached permit.

2. The permittee agrees to and does hereby release and agree to save and hold the Government harmless from any and all causes of action, suits at law or equity, or claims or demands or from any liability of any nature whatsoever for or on account of any damages to persons or property, including a permitted facility, growing out of the ownership, construction, operation or maintenance by the permittee of the permitted facilities and/or activities.

3. Ownership, construction, operation, use and maintenance of a permitted facility are subject to the Government's navigation servitude.

4. No attempt shall be made by the permittee to forbid the full and free use by the public of all public waters and/or lands at or adjacent to the permitted facility or to unreasonably interfere with any authorized project purposes, including navigation in connection with the ownership, construction, operation or maintenance of a permitted facility and/or activity.

5. The permittee agrees that if subsequent operations by the Government require an alteration in the location of a permitted facility and/or activity or if in the opinion of the district commander a permitted facility and/or activity shall cause unreasonable obstruction to navigation or that the public interest so requires, the permittee shall be required, upon written notice from the district commander to remove, alter, or relocate the permitted facility, without expense to the Government.

6. The Government shall in no case be liable for any damage or injury to a permitted facility which may be caused by or result from subsequent operations undertaken by the Government for the improvement of navigation or for other lawful purposes, and no claims or right to compensation shall accrue from any such damage. This includes any damage that may occur to private property if a facility is removed for noncompliance with the conditions of the permit.

7. Ownership, construction, operation, use and maintenance of a permitted facility and/or activity are subject to all applicable Federal, state and local laws and regulations. Failure to abide by these applicable laws and regulations may be cause for revocation of the permit.

8. This permit does not convey any property rights either in real estate or material; and does not authorize any injury to private property or invasion of private rights or any infringement of Federal, state or local laws or regulations, nor does it obviate the necessity of obtaining state or local assent required by law for the construction, operation, use or maintenance of a permitted facility and/or activity.

9. The permittee agrees to construct the facility within the time limit agreed to on the permit issuance date. The permit shall become null and void if construction is not completed within that period. Further, the permittee agrees to operate and maintain any permitted facility and/or activity in a manner so as to provide safety, minimize any adverse impact on fish and wildlife habitat, natural, environmental, or cultural resources values and in a manner so as to minimize the degradation of water quality.

10. The permittee shall remove a permitted facility within 30 days, at his/her expense, and restore the waterway and lands to a condition accepted by the resource manager upon termination or revocation of this permit or if the permittee ceases to use, operate or maintain a permitted facility and/or activity. If the permittee fails to comply to the satisfaction of the resource manager, the district commander may remove the facility by contract or otherwise and the permittee agrees to pay all costs incurred thereof.

11. The use of a permitted boat dock facility shall be limited to the mooring of the permittee's vessel or watercraft and the storage, in enclosed locker facilities, of his/her gear essential to the operation of such vessel or watercraft.

12. Neither a permitted facility nor any houseboat, cabin cruiser, or other vessel moored thereto shall be used as a place of habitation or as a full or part-time residence or in any manner which gives the appearance of converting the public property, on which the facility is located, to private use.

13. Facilities granted under this permit will not be leased, rented, sub-let or provided to others by any means of engaging in commercial activity(s) by the permittee or his/her agent for monetary gain. This does not preclude the permittee from selling total ownership to the facility.

14. On all new docks and boat mooring buoys, floatation shall be of materials which will not become waterlogged (not over 1½ percent by volume ASTM), is resistant to damage by animals, and will not sink or contaminate the water if punctured. No metal covered or injected drum floatation will be allowed. Foam bead floatation that is not subject to deterioration through loss of beads, meets the above criteria, and has a

minimum density of 1.2 lb/cu ft. is authorized. Foam bead floatation with a density of 1.0 lb/cu ft. but does not otherwise meet the above criteria is authorized provided it is encased in an approved protective coating which enables it to meet the specifications above. An approved coating is defined as warranted by the manufacturer for a period of a least eight years against cracking, peeling, sloughing and deterioration from ultra violet rays, while retaining its resiliency against ice and bumps by watercraft. Existing floatation will be authorized until it has severely deteriorated and is no longer serviceable or capable of supporting the structure, at which time it should be replaced with approved floatation.

15. Permitted facilities and activities are subject to periodic inspection by authorized Corps representatives. The resource manager will notify the permittee of any deficiencies and together establish a schedule for their correction. No deviation or changes from approved plans will be allowed without prior written approval of the resource manager.

16. Floating facilities shall be securely attached to the shore in accordance with the approved plans by means of moorings which do not obstruct general public use of the shoreline or adversely affect the natural terrain or vegetation. Anchoring to vegetation is prohibited.

17. The permit display tag shall be posted on the permitted facility and/or on the land areas covered by the permit so that it can be visually checked with ease in accordance with instructions provided by the resource manager.

18. No vegetation other than that prescribed in the permit will be damaged, destroyed or removed. No vegetation of any kind will be planted, other than that specifically prescribed in the permit.

19. No change in land form such as grading, excavation or filling is authorized by this permit.

20. This permit is non-transferable. Upon the sale or other transfer of the permitted facility or the death of the permittee and his/her legal spouse, this permit is null and void.

21. By 30 days written notice, mailed to the permittee by certified letter, the district commander may revoke this permit whenever the public interest necessitates such revocation or when the permittee fails to comply with any permit condition or term. The revocation notice shall specify the reasons for such action. If the permittee requests a hearing in writing to the district commander through the resource manager within the 30-day period, the district commander shall grant such hearing at the earliest opportunity. In no event shall the hearing date be more than 60 days from the date of the hearing request. Following the hearing, a written decision will be rendered and a copy mailed to the permittee by certified letter.

22. Notwithstanding the conditions cited in condition 21 above, if in the opinion of the district commander, emergency circumstances dictate otherwise, the district commander may summarily revoke the permit.

23. When vegetation modification on these lands is accomplished by chemical means, the program will be in accordance with appropriate Federal, state and local laws, rules and regulations.

24. The resource manager or his/her authorized representative shall be allowed to cross the permittee's property, as necessary to inspect facilities and/or activities under permit.

25. When vegetation modification is allowed, the permittee will delineate the government property line in a clear, but unobtrusive manner approved by the resource manager and in accordance with the project Shoreline Management Plan.

26. If the ownership of a permitted facility is sold or transferred, the permittee or new owner will notify the Resource Manager of the action prior to finalization. The new owner must apply for a Shoreline Use Permit within 14 days or remove the facility and restore the use area within 30 days from the date of ownership transfer.

27. If permitted facilities are removed for storage or extensive maintenance, the resource manager may require all portions of the facility be removed from public property.

APPENDIX D TO §327.30—PERMIT—[RESERVED]

[55 FR 30697, July 27, 1990, as amended at 57 FR 21895, May 26, 1992; 57 FR 29220, July 1, 1992]

EFFECTIVE DATE NOTE: The amendment to §327.30 revising the last sentence of paragraph (k), published at 56 FR 29587, June 28, 1991, was deferred indefinitely. See 56 FR 49706, Oct. 1, 1991. The administrative charges contained in §327.30, Shoreline Management on Civil Works Projects, published in the July 1, 1991 edition of the Code of Federal Regulations will remain in effect. Any future decisions affecting this regulation will be published in the FEDERAL REGISTER at a later date by the Corps of Engineers, Department of the Army. For the convenience of the user, the rule published on June 28, 1991, at FR page 29587, is set forth as follows:

§327.30 Shoreline Management on Civil Works Projects.

* * * * *

(k) * * * The Fee Schedule is published in §327.31.

§ 327.31 Shoreline management fee schedule.

A charge will be made for Shoreline Use Permits to help defray expenses associated with issuance and administration of the permits. As permits become eligible for renewal after July 1, 1976, a charge of $10 for each new permit and a $5 annual fee for inspection of floating facilities will be made. There will be no annual inspection fee for permits for vegetative modification on Shoreline areas. In all cases the total administrative charge will be collected initially at the time of permit issuance rather than on a piecemeal annual basis.

[56 FR 61163, Dec. 2, 1991; 56 FR 65190, Dec. 16, 1991]

PART 328—REGULATION OF SEAPLANE OPERATIONS AT CIVIL WORKS WATER RESOURCE DEVELOPMENT PROJECTS ADMINISTERED BY THE CHIEF OF ENGINEERS

Sec.
328.1 Purpose.
328.2 Applicability.
328.3 References.
328.4 Policy.
328.5 Guidelines for seaplane use of project waters.
328.6 Procedures.
328.7 Other authorities.

AUTHORITY: Sec. 4 of the Act of Dec. 22, 1944, 58 Stat. 889, as amended, (16 U.S.C. 460d).

SOURCE: 42 FR 59076, Nov. 15, 1977, unless otherwise noted.

§ 328.1 Purpose.

This regulation, in connection with the modification of the present prohibition of seaplane operations by the amendment to § 327.4 of title 36 of the Code of Federal Regulations, is designed to provide uniform policies and criteria for designating Corps projects, or portions thereof, at which seaplane operations are prohibited or restricted; and to continue to protect the integrity and all authorized uses of such projects and the safety of users of such projects. As used in this regulation, *projects* or *Corps projects* means water resources development projects administered by the Chief of Engineers.

§ 328.2 Applicability.

This regulation is applicable to all Field Operating Agencies having Civil Works responsibilities.

§ 328.3 References.

(a) Title 36 CFR, part 327, Rules and Regulations Governing Public Use of Water Resource Development Projects Administered by the Chief of Engineers (38 FR 7552, March 23, 1973).
(b) ER 1105–2–507.
(c) ER 1130–2–400.
(d) ER 1145–2–301.
(e) ER 1145–2–303.
(f) ER 1165–2–400.
(g) ER 405–2–800 Series.

§ 328.4 Policy.

(a) The objective of Corps of Engineers resources management is to maximize public enjoyment and use of the lands, waters, forests, and associated recreational resources, consistent with their aesthetic and biological values. Such management includes efforts to preserve and enhance the environmental amenities that are the source of the recreational value associated with the project and to allow such other new and innovative uses of the projects that are not detrimental thereto.

(b) Seaplane operations at water resource development projects administered by the Chief of Engineers may involve hazards including, but not limited to, conflicting recreational activities, floating debris, and underwater hazards, which may be accentuated by the normal fluctutations of water levels.

(c) Seaplane operations may be prohibited or restricted at such water resource development projects, or portions thereof, for a variety of management reasons. Prohibiting or restricting seaplane operations in certain portions within a project in no way implies that safety hazards to seaplane operations or to other recreation users may not exist in other portions of such project.

(d) The operation of a seaplane at Corps projects is at the risk of the plane's owner, operator, and passenger(s). The responsibility to ascertain whether seaplane operations are permitted, prohibited or restricted at

such projects, and portions thereof, is incumbent upon the person(s) contemplating the use of, or using, such waters.

§ 328.5 Guidelines for seaplane use of project waters.

(a) All operations of the aircraft while upon the water shall be in accordance with the marine rules of the road for power boats or vessels.

(b) Seaplanes on project waters and lands in excess of 24 hours shall be securely moored at mooring facilities and at locations permitted by the District Engineer. Seaplanes may be temporarily moored on project waters and lands, except in areas prohibited by the District Engineer, for periods less than 24 hours providing that—

(1) The mooring is safe, secure, and accomplished so as not to damage the rights of the government or members of the public and

(2) The operator remains in the vicinity of the seaplane and reasonably available to relocate the seaplane if necessary.

(c) No commercial operation of seaplanes from project waters will be allowed without written approval of the District Engineer following consultation with and the necessary clearance from the Federal Aviation Administration (FAA) and other appropriate public authorities and affected interests.

(d) Seaplanes may not be operated at Corps projects between sunset and sunrise unless adequate lighting and supervision are available.

(e) Requests for public commercial facilities in support of seaplanes will be handled under normal concession policies.

(f) Permits for floating and nonfloating structures of any kind, in, on, or affecting project waters, under the management of the Resource Manager, including waters under lease, license or other outgrant agreement, shall be handled in accordance with the lakeshore management plan or policy statement for the project involved, § 327.19 of title 36, Code of Federal Regulations and, where required by statute or regulation, section 10 of the River and Harbor Act (approved March 3, 1899) and section 404 of the Federal Water Pollution Control Act of 1972 (Pub. L. 92–500).

(g) Appropriate signs should be employed to inform users of projects, or portions thereof, where seaplane operations are permitted.

§ 328.6 Procedures.

(a) In order to protect the integrity and all authorized uses of Corps projects and the safety of all users of the lake projects, the District Engineer shall:

(1) Examine and investigate each Corps project within his district which a seaplane operator could conceivably attempt to use for seaplane operations, and determine those projects, or portions thereof, in which seaplane operations should be prohibited.

(2) Establish such restrictions on seaplane operations as he deems necessary or desirable in accordance with these regulations for other areas. Seaplane takeoff and landing maneuvers within specified distances of the shoreline, bridges, causeways, water utility crossings, dams, and similar structures should be prohibited.

(3) Prior to concluding any such examination and investigation, consult with the FAA, appropriate State aeronautical agency, lessee or licensee of outgranted lands, the Coast Guard, and state boating law administrators, and use his best efforts to consult with other interested or affected public authorities and private interests for their guidance, particularly for those projects which are regularly used by the public for recreational purposes or are located in the vicinity of actively used airports, air fields, or densely populated areas. News releases, public notice, and congressional liaison should be used. Public hearings are encouraged.

(4) In making his investigation, examination, and determination, consider environmental factors in accordance with the National Environmental Policy Act of 1969 (NEPA), Pub. L. 91–190—particularly should he consider the impact that seaplane operations may have on the safety at the project, aquatic, fish and wildlife, noise levels, recreation, and air and water quality. Prior to concluding such investigation and examination, he shall prepare an

environmental impact assessment (EIA) and, if necessary, an environmental impact statement (EIS) assessing the environmental impacts of permitting seaplanes to operate at the projects, or portions thereof, in his district.

(5) Place on Corps maps, brochures and otherwise adequately apprise the public and interested agencies of projects, or portions thereof, where seaplane operations are prohibited or restricted. Each map, brochure, or other notice should clearly indicate that operation of a seaplane at Corps projects is at the risk of the plane's owner, operator, and/or passenger(s).

(6) Notify the FAA by letter of projects, or portions thereof, where seaplane operations are prohibited or restricted. The letter should use the words ''seaplane operations prohibited,'' or ''seaplane operations restricted,'' describe the geographical location of such areas as precisely as possible, describe any restrictions, include a telephone number for FAA to contact the District, and be sent to: Federal Aviation Administration, Area Traffic Service, Flight Services Division (AAT–432), 800 Independence Avenue SW., Washington, DC 20591.

(b) The removal of the present prohibition on seaplane operations will be effective one year from the date of publication of these regulations. The District Engineer should complete the examination, investigation, determination and notification to the FAA of projects, or portions thereof, where seaplane operations are prohibited or restricted, within one year from the date of this regulation. The District Engineer may extend the present prohibition for up to one additional year if he cannot complete his examination, investigation, determination, and notification within one year. In such event, he should notify the FAA by letter and publish other appropriate notices. Any further extension of time will require the approval of the Chief of Engineers.

(c) After he has completed his examination, investigation, determination and notification of the FAA of projects, or portions thereof where seaplane operations will be prohibited or restricted, The District Engineer should periodically reevaluate his determination as additional operational data becomes available. He may modify, delete, or add projects, or portions thereof, where seaplane operations are prohibited or restricted. Except where immediate action is required, he should consult with appropriate public authorities and private interests for their guidance with regard to such actions. Notification of these actions shall be forwarded to the FAA as indicated in paragraph (a)(6) of this section.

§ 328.7 Other authorities.

Nothing in the preceding provisions bestows authority to deviate from rules and regulations or prescribed standards of the State Aeronautical Agency, Federal Aviation Administration, Coast Guard, or other appropriate Federal, state, or local authority.

PART 330—REGULATION OF LAW ENFORCEMENT SERVICES CONTRACTS AT CIVIL WORKS WATER RESOURCE PROJECTS ADMINISTERED BY THE CHIEF OF ENGINEERS

Sec.

330.1 Purpose.
330.2 Applicability.
330.3 References.
330.4 General.
330.5 Policy.
330.6 Criteria.
330.7 Funding.
330.8 Annual report.

AUTHORITY: Sec. 120 of the Water Resource Development Act of 1976, 90 Stat. 2917.

SOURCE: 42 FR 61986, Dec. 8, 1977, unless otherwise noted.

§ 330.1 Purpose.

This regulation provides policy and guidance for the establishment and management of the contract law enforcement program including preparation of and management of contracts ensuing from this program.

§ 330.2 Applicability.

This regulation is applicable to all field operating agencies having responsibilities for Civil Works water resource development projects.

§330.3 References.

(a) Section 4 of the Flood Control Act of 1944, as amended (16 U.S.C. 460d).

(b) Section 234 of the River and Harbor and Flood Control Act of 1970 (Pub. L. 91–611, 84 Stat. 1818).

(c) Section 120 of the Water Resource Development Act of 1976 (Pub. L. 94–587, 90 Stat. 2917).

(d) 36 CFR chapter III.

(e) ER 190–2–3.

(f) ER 190–3–4.

§330.4 General.

(a) Section 120(a) of reference §330.3(c) authorizes the Secretary of the Army, acting through the Chief of Engineers, to contract with States and their political subdivisions for the purpose of obtaining increased law enforcement services at water resource development projects under the jurisdiction of the Secretary of the Army to meet needs during peak visitation periods.

(b) Further, section 120(b) of the Act authorizes a maximum appropriation of up to $6,000,000 per fiscal year for the fiscal years ending 30 September 1978 and 30 September 1979, to carry out section 120(a).

§330.5 Policy.

(a) It is the policy of the Corps of Engineers to provide, to the extent of its authorities, a safe and healthful environment for public use of lands and waters at Civil Works water resource development projects. To insure this safe and healthful environment, and to augment the citation authorities granted to the Corps of Engineers by reference §330.3(b), District Engineers, subject to the authority of the Division Engineers, as set out below, are hereby delegated the authority to contract with States or their political subdivisions to obtain increased law enforcement services at Civil Works water resource development projects. Division Engineers are hereby delegated the authority to approve any minor deviations from this regulation except that any substantial deviations from the policies expressed within this regulation will require the prior approval of the Chief of Engineers or his authorized representative. Any required approval for deviation shall be made prior to the execution of the contract. When fiscal year 1978 and fiscal year 1979 work allowances are issued, instructions will be furnished on reporting requirements and the control of expenditures.

(b) Contracts for law enforcement services, as authorized in §330.5(a), shall be subject to the terms and conditions as provided for within this regulation and in accordance with standard contracting and accounting procedures applicable to the Corps of Engineers.

(c) This regulation is not intended to diminish or otherwise limit the existing law enforcement responsibilities of the State or local law enforcement agencies.

(d) Contract law enforcement personnel shall not be given Federal citation authority for enforcement of regulations contained in title 36 of the Code of Federal Regulations, Chapter III nor shall they be empowered to enforce such regulations. These regulations shall remain the responsibility of the Corps of Engineers.

(e) Contracts for increased law enforcement shall be for those projects or portions of projects that are operated and maintained by the Corps of Engineers. Law enforcement services will not be provided under this program to those outgrant areas operated and maintained by a non-Federal sponsor.

§330.6 Criteria.

(a) In order to provide reimbursement for law enforcement services supplied by a State or local law enforcement agency, a contract must be executed and approved in accordance with this regulation prior to the provisions of such services.

(b) The authorized contract law enforcement program extends only to 30 September 1979. Law enforcement services acquired by contract under this program shall be limited to those increased law enforcement services required to meet the needs of the public during peak visitation periods. Accordingly, the contract period shall not extend beyond the dates of 1 April through 30 September inclusive, and in no event shall the contract be written for more than 120 days within that time period. The contract may provide for an option to renew for a similar, additional period not to exceed 120-day

period in Fiscal Year 1979. Any exceptions to this criteria must be approved by the Chief of Engineers or his authorized representative.

(c) Contracts shall be consummated only with those public law enforcement agencies legally empowered to enforce State and local criminal and civil laws within their respective political jurisdictions. In light of this requirement and the authority cited in § 330.3(c), it is recognized that sole source negotiations may necessarily be utilized in the procurement of these services. In negotiating law enforcement contracts with these agencies the District Engineer must determine the reasonableness of the price for the law enforcement services offered under the contract. Such a determination shall be made prior to execution of the contract, in accordance with the applicable Contract Cost Principles and Procedures as set out in ASPR, section 15, part 7, and as subject to the policies contained in this regulation. Such a determination shall be contained in the official contract file and must accompany any requests for deviations from the Division Engineer or Chief of Engineers as provided for in § 330.5(a) of this regulation. Contract law enforcement personnel must meet all the qualifications, including minimal law enforcement training, required by State and local laws and regulations.

(d) The contractor shall provide all personnel, equipment and supplies which are required to provide the increased law enforcement services contracted for by the District Engineer. The Corps of Engineers shall not reimburse the contractor for the purchase of any equipment or supplies desired by the contractor for use under this program. However, the Corps of Engineers shall reimburse the contractor for the reasonable costs incurred by him in the rental or use of such equipment which is allocated to the work performed by him under the contract. Such use shall include:

(1) A depreciation or use allowance for such equipment as determined by the service life evaluation system used by the contractor, and (2) the costs of necessary maintenance, repair, and upkeep of the property which neither adds to the permanent value of the property nor appreciably prolongs its intended life, but keeps it at an efficient operating condition.

(e) Reimbursement for law enforcement services shall be considered only for increased law enforcement services to meet needs during peak visitation periods. Each District Engineer shall evaluate and establish a normal law enforcement service standard for each contract situation and include such standard in the plan of operation to be developed in accordance with § 330.6(h). Each District Engineer shall evaluate the existing law enforcement services now being provided by State or local law enforcement agencies at those water resources projects or recreation areas where it is anticipated that law enforcement service contracts may be executed, and determine the scope including the type and amount, of law enforcement service which exceeds the normal law enforcement standard, and which will become eligible for reimbursement under the contract. Normally, requests by the District Engineer or his authorized representative for emergency or unanticipated law enforcement assistance will be considered nonreimbursable. Increased law enforcement services, eligible for reimbursement under the terms of the contract, shall be those regularly scheduled patrols or surveillance in excess of the normal law enforcement standard presently being provided by the contractor.

(f) An appropriate orientation program will be given by Corps personnel to all contract law enforcement personnel assigned to Corps projects. The purpose of this orientation will be to familiarize the contract law enforcement personnel with the policies and procedures of the Corps of Engineers, and to familiarize Corps personnel with the functions and duties of the State or local law enforcement agency. The Corps of Engineers shall reimburse the contractor for the cost per man hour as set out in § 330.6(h)(4) for attending the orientation program.

(g) The contractor shall be required to keep a record of the services provided to the District under the terms and conditions of the contract in accordance with the criteria established

in the plan of operation required in §330.6(h).

(h) The District Engineer, in cooperation with the Contractor, shall prepare a Plan of Operation for the Provision of law enforcement services as an attachment to the contract. The Plan of Operation shall contain, but not necessarily be limited to, the following information:

(1) Identify, by name and location, the project or projects and specific areas (recreation and others) that require law enforcement services.

(2) Describe the normal law enforcement services to be provided by the Contractor without reimbursement by the Government (see §330.6(e)). Identify time of day, number of hours-per-day number of days-per-week, and the number of patrols.

(3) Describe the increased law enforcement services to be provided by the Contractor under the contract. Identify the time-of-day, number of hours-per-day, number of days-per-week, number of patrols, manpower per patrol, and effective starting and ending dates.

(4) Identify the cost-per-man-hour for the provision of reimbursable law enforcement services, and identify the costs for utilization and operation, maintenance and repair of such equipment as allocated for use under the contract. (See §330.6(d).)

(5) The District Engineer and the Contractor should designate specific individuals to issue or receive requests for reimbursable law enforcement services under the contract.

(6) Describe the billing procedures to be utilized for the increased law enforcement services. The Contractor shall provide, at a minimum, the total charges, the number of hours involved, and starting and ending dates of the billing period.

(7) The Contractor shall prepare a Daily Law Enforcement Log (see §330.6(g) for the law enforcement services rendered as specified in §330.6(h)(3)). These logs shall be compiled by the Contractor and submitted to the District Engineer or his designated representative on a regular basis throughout the life of the contract. It is intended by this reporting requirement to minimize the paperwork burden on behalf of the Contractor while, at the same time, providing assurance to the Government with an adequate information base on which to administer the law enforcement services being provided under the contract. Any requirement for additional information to be contained in these reports due to unique or special circumstances encountered in negotiating a Plan of Operation with a particular law enforcement jurisdiction must receive the prior approval of the Division Engineer.

§330.7 Funding.

(a) Section 330.3(c) sets forth the maximum authorized funds for law enforcement contracting in FY 1978 and FY 1979. The Division funding levels for FY 1978 are based on information as previously submitted.

(b) The FY 1979 funding request for law enforcement contracting will be submitted as part of the FY 1979 budget submittal.

§330.8 Annual report.

(RCS–DAEN–CWO–53) The Division Engineer will submit a consolidated annual report to reach HQDA (DAEN–CWO–R) WASH DC 20314 not later than 30 October. This requirement expires 30 October 1979. The report will contain the following:

(a) Districts reporting.

(b) Number assigned each contract.

(c) Name of projects covered under each contract.

(d) Number of man-hours of increased law enforcement services provided under each contract.

(e) Total contract cost.

(f) Cost per man-hour for each contract.

(g) Corps of Engineers administrative or overhead costs associated with each contract.

(h) Number of arrests and type of offense committed, i.e., assault, burglary, auto theft, etc.

(i) The Division Engineers assessment of the effects of the contract law enforcement program and recommendation.

PART 331—REGULATIONS GOVERNING THE PROTECTION, USE AND MANAGEMENT OF THE FALLS OF THE OHIO NATIONAL WILDLIFE CONSERVATION AREA, KENTUCKY AND INDIANA

Sec.
331.1 Applicability and scope.
331.2 Policy.
331.3 Hunting and trapping.
331.4 Fishing.
331.5 Explosives and fireworks.
331.6 Public property.
331.7 Sanitation.
331.8 Picnicking.
331.9 Camping.
331.10 Swimming.
331.11 Special events.
331.12 Vehicles.
331.13 Vessels.
331.14 Aircraft.
331.15 Fires.
331.16 Interference with government employees.
331.17 Minerals.
331.18 Restrictions.
331.19 Commercial activities.
331.20 Advertisement.
331.21 Unauthorized structures.
331.22 Abandonment of personal property.
331.23 Control of animals.
331.24 Permits.
331.25 Violation of regulations.

AUTHORITY: Pub. L. 97–137.

SOURCE: 48 FR 40720, Sept. 9, 1983, unless otherwise noted.

§ 331.1 Applicability and scope.

(a) The regulations contained in this part apply to those lands and waters within the established boundary of the Falls of the Ohio National Wildlife Conservation Area (WCA). Included in this boundary, which was published in the FEDERAL REGISTER of August 12, 1982, are publicly and privately owned lands, waters and improvements. The Federal Government, acting through the Corps of Engineers, will acquire such rights to privately-owned properties in the WCA as are necessary to carry out the purposes of title II, Pub. L. 97–137. The regulations prescribed herein are for the use, management and protection of the resources of the WCA and all persons entering, using or visiting within the boundaries of the WCA are subject to these regulations. All other applicable Federal, State and local laws and regulations remain in full force and effect. The District Engineer, US Army Corps of Engineers, exercises non-exclusive jurisdiction over the lands and waters of the WCA and enforces these regulations.

(b) The WCA boundary encompasses an existing hydroelectric generating station and the McAlpine Locks and Dam, operating navigation structures which are part of the authorized Ohio River Navigation System. The continued operation and maintenance of this system take precedence over the purposes of the WCA, except that such operation and maintenance will be consistent with the basic purpose of the WCA as regards prohibition of hunting, vandalism, and dumping of refuse. Management of the WCA to achieve its intended purposes will, to the extent practicable, be accomplished in a manner consistent and compatible with continued generation of electricity and navigation on the Ohio River, including operation and maintenance of the McAlpine Locks and Dam and the Louisville Repair Station and material storage areas located on Shippingport Island.

§ 331.2 Policy.

(a) It is the policy of the Secretary of the Army, acting through the Chief of Engineers, to manage the natural and cultural resources of the WCA in the public interest, providing the public with safe and healthful recreational opportunities while protecting and enhancing these resources.

(b) Unless otherwise indicated herein, the term *District Engineer* shall include the authorized representatives of the District Engineer.

(c) The WCA shall be available to the public without regard to sex, race, color, creed or national origin. No lessee, licensee or concessionaire providing a service to the public shall discriminate against any person because of sex, race, creed, color, or national origin in the conduct of the operations under the lease, license, or concession contract.

§ 331.3 Hunting and trapping.

Unless authorized in writing by the District Engineer:

(a) The hunting, trapping, catching, molesting, killing, or having in possession any wild animal or bird, or taking the eggs of any such bird, is prohibited.

(b) Possession of equipment (including, but not limited to, firearms, ammunition, traps, projectile firing devices including bow and arrow) which could be used for hunting, trapping, or the taking of wildlife, is prohibited.

§ 331.4 Fishing.

Unless otherwise authorized in writing by the District Engineer:

(a) Fishing is only permitted in accordance with the laws and regulations of the State within whose exterior boundaries that portion of the WCA is located, and such laws and regulations which are now or may hereafter be in effect are hereby adopted as part of these regulations.

(b) Fishing by means of the use of drugs, poisons, explosives, bow and arrow or electricity is prohibited.

(c) Commercial fishing and fishing with gill nets, trammel nets, hoop nets, bow and arrow or trot lines is prohibited.

§ 331.5 Explosives and fireworks.

Unless otherwise authorized in writing by the District Engineer.

(a) The possession or use of fireworks is prohibited.

(b) The possession or use of explosives is prohibited.

§ 331.6 Public property.

Unless otherwise authorized in writing by the District Engineer, the destruction, injury, defacement, removal, or any alteration of public property including, but not limited to natural formations, paleontological features, historical and archaeological features and vegetative growth is prohibited. Any such destruction, removal, or alteration of public property shall be in accordance with the conditions of any permission granted.

§ 331.7 Sanitation.

(a) Garbage, trash, rubbish, litter, or any other waste material or waste liquid generated on the WCA shall be removed from the area or deposited in receptacles provided for that purpose. The improper disposal of such wastes within the boundaries of the WCA is prohibited.

(b) The use of refuse containers for the disposal of refuse not generated on the WCA is prohibited.

(c) It is a violation to bring any material onto the WCA for the purpose of disposal.

(d) The discharge or placing of sewage, galley waste, garbage, refuse or pollutants into the WCA waters from any vessel or watercraft is prohibited.

§ 331.8 Picnicking.

(a) Picnicking is permitted only in designated areas.

(b) Picnickers shall remove all personal equipment and clean their sites upon departure.

§ 331.9 Camping.

Camping is not permitted within the WCA.

§ 331.10 Swimming.

Swimming is prohibited unless authorized in writing by the District Engineer.

§ 331.11 Special events.

(a) Special events including, but not limited to, water carnivals, boat regattas, music festivals, dramatic presentations, or other special recreation programs are prohibited unless written permission has been granted by the District Engineer.

(b) The public shall not be charged any fee by the sponsor of such permitted event unless the District Engineer has approved in writing the proposed schedule of fees. The District Engineer shall have authority to revoke permission and require removal of any equipment upon failure of the sponsor to comply with terms and conditions of the permit/permission. Any violation shall constitute a separate violation for each calendar day in which it occurs.

§ 331.12 Vehicles.

(a) The use of a vehicle off roadways is prohibited except as may be authorized by the District Engineer.

(b) Vehicles shall not be parked in violation of any posted restriction, or in such a manner as to endanger any Federal property to include natural

features. The owner of any vehicle parked in violation of this section shall be presumed to have parked it, and unless rebutted such presumption will be sufficient to sustain a conviction as provided for in § 331.25.

(c) Vehicles shall be operated in accordance with all posted regulations.

(d) Driving or operating any vehicle in a careless, negligent, or reckless manner, heedlessly or in willful disregard for the safety of other persons, or in such manner as to endanger any property or environmental feature, or without due care or at a speed greater than is reasonable and prudent under prevailing conditions with regard to traffic, weather, road, light and surface conditions, is prohibited.

(e) This section pertains to all vehicles, including, but not limited to, automobiles, trucks, motorcycles, minibikes, trail bikes, snowmobiles, dune buggies, all terrain vehicles, bicycles, trailers, campers, or any other such equipment.

(f) Except as authorized by the District Engineer, no person shall operate any motorized vehicle without a proper and effective exhaust muffler, or with an exhaust muffler cutout open, or in any other manner which renders the exhaust muffler ineffective in muffling the sound of engine exhaust.

§ 331.13 Vessels.

(a) Vessels or other watercraft may be operated in the WCA waters except in prohibited or restricted areas in accordance with posted regulations and applicable Federal, State and local laws.

(b) All vessels when not in actual use shall be removed from the WCA unless securely moored at mooring facilities approved by the District Engineer. The placing of floating or stationary mooring facilities to, or interfering with, a buoy, channel marker, or other navigational aid is prohibited.

(c) The operation of vessels or other watercraft in a careless, negligent, or reckless manner so as to endanger any property (including the operator and/or user(s) of the vessel or watercraft) is prohibited.

§ 331.14 Aircraft.

(a) The operation of aircraft on WCA lands and waters is prohibited, unless authorized in writing by the District Engineer.

(b) Except in extreme emergencies threatening human life or serious property loss, the air delivery of any person or thing by parachute, helicopter, or other means onto project lands or waters without written permission of the District Engineer is prohibited.

(c) The provisions of this section shall not be applicable to aircraft engaged on official business of the Federal Government or used in emergency rescue in accordance with the directions of the District Engineer.

§ 331.15 Fires.

Open fires are prohibited unless confined to fireplaces, grills, or other facilities designed for this purpose as designated by the District Engineer. Fires shall not be left unattended and must be completely extinguished prior to departure.

§ 331.16 Interference with government employees.

Interference with any Government employee in the conduct of his or her official duties pertaining to the administration of these regulations is prohibited. It is a violation to fail to comply with a lawful order directed by any Government employee or to knowingly give any false, fictitious, or fraudulent report or other information to any government employee in the performance of his or her official duties pertaining to the administration of these regulations.

§ 331.17 Minerals.

All activities in connection with prospecting, exploration, development, mining or other removal or the processing of mineral resources and all uses reasonably incident thereto are prohibited.

§ 331.18 Restrictions.

The District Engineer may establish and post a schedule of visiting hours and/or restrictions on the public use of a portion or portions of the WCA. The District Engineer may close or restrict

the use of the WCA or portion of the WCA when necessitated by reason of public health, public safety, security, maintenance, or other reasons in the public interest. Entering or using the project in a manner which is contrary to the schedule of visiting hours, closure or restrictions is prohibited.

§ 331.19 Commercial activities.

Unless otherwise authorized in writing by the District Engineer, the engaging in or solicitation of business or money is prohibited.

§ 331.20 Advertisement.

Unless otherwise authorized in writing by the District Engineer, advertising by the use of billboards, signs, markers, audio devices, or any other means whatsoever including handbills, circulars, and posters is prohibited. Vessels or vehicles with semipermanent or permanently installed signs are exempt if being used for authorized recreational activities or special events and in compliance with all other rules and regulations pertaining to vessels and vehicles.

§ 331.21 Unauthorized structures.

The construction, placing, or continued existence of any structure of any kind under, upon, in, or over WCA lands or waters is prohibited unless a permit, lease, license, or other appropriate written agreement therefor has been issued by the District Engineer. Structures not so authorized are subject to summary removal or impoundment by the District Engineer. The design, construction, placing, existence, or use of structures in violation of the terms of the permit, lease, license, or other written agreement therefor is prohibited.

§ 331.22 Abandonment of personal property.

(a) Personal property of any kind left unattended upon WCA lands or waters for a period of 24 hours shall be considered abandoned and may be impounded and stored at a storage point designated by the District Engineer who may assess a reasonable impoundment fee. Such fee shall be paid before the impounded property is returned to its owner.

(b) If abandoned property is not claimed by its owner within 3 months after the date it is received at the storage point designated by the District Engineer, it may be disposed of by public or private sale or by other means determined by the District Engineer. Any net proceeds from the sale of property shall be conveyed unto the Treasury of the United States as miscellaneous receipts.

§ 331.23 Control of animals.

(a) No person shall bring or allow horses, cattle, or other livestock in the WCA.

(b) No person shall bring dogs, cats, or other pets into the WCA unless penned, caged, or on a leash under 6 feet in length, or otherwise under physical restraint at all times. Unclaimed or unattended animals are subject to immediate impoundment and removal in accordance with State and local laws.

§ 331.24 Permits.

It shall be a violation of these regulations to refuse to or fail to comply with the terms or conditions of any permit isued by the District Engineer.

§ 331.25 Violation of regulations.

Anyone violating the provisions of this regulation shall be subject to a fine of not more than $500 or imprisonment for not more than 6 months, or both. All persons designated by the Chief of Engineers, U.S. Army Corps of Engineers, for that purpose shall have the authority to issue a citation for the violation of these regulations, requiring the appearance of any person charged with violation to appear before the U.S. Magistrate within whose jurisdiction the violation occurred.

PARTS 332—399 [RESERVED]

CHAPTER IV—AMERICAN BATTLE MONUMENTS COMMISSION

Part		*Page*
400	Employee responsibilities and conduct	34
401	Procedures	35
402	Erection of war memorials in foreign countries by American citizens, States, municipalities, or associations	36
403	Erection of memorial monuments, buildings, and headstones in American cemeteries located outside the United States and its Territories and possessions	36
404	Procedures and guidelines for compliance with the Freedom of Information Act	36
405	Schedule of fees for search and duplication of records	40
406	Enforcement of nondiscrimination on the basis of handicap in programs or activities conducted by American Battle Monuments Commission	40
407—499	[Reserved]	

PART 400—EMPLOYEE RESPONSIBILITIES AND CONDUCT

Sec.
400.735–1 Adoption of regulations.
400.735–2 Review of statements of employment and financial interests.
400.735–3 Disciplinary and other remedial action.
400.735–4 Gifts, entertainment, and favors.
400.735–5 Outside employment and other activity.
400.735–6 Specific provisions of agency regulations governing special Government employees.
400.735–7 Statements of employment and financial interests.
400.735–8 Supplementary statements.

AUTHORITY: E.O. 11222, 30 FR 6469, 3 CFR 1965 Supp.; 5 CFR 735.101 *et seq.*

SOURCE: 33 FR 15379, Oct. 17, 1968, unless otherwise noted.

§ 400.735–1 Adoption of regulations.

Pursuant to 5 CFR 735.104(f), the American Battle Monuments Commission (referred to hereinafter as the agency) hereby adopts the following sections of part 735 of title 5, Code of Federal Regulations: §§ 735.101, 735.102, 735.201a, 735.202 (a), (d), (e), (f), 735.210, 735.302, 735.303(a), 735.304, 735.305(a), 735.403(a), 735.404, 735.405, 735.407—735.411, 735.412 (b) and (d). These adopted sections are modified and supplemented as set forth in this part.

§ 400.735–2 Review of statements of employment and financial interests.

Each statement of employment and financial interests submitted under this part shall be reviewed by the Officer in Charge, U.S. Office, except those of the Officer in Charge, U.S. Office, and the Secretary, American Battle Monuments Commission. The statement of the Officer in Charge, U.S. Office, shall be reviewed by the Secretary of the American Battle Monuments Commission. The statement of the Secretary, American Battle Monuments Commission, shall be reviewed by the Chairman of the Agency. When a review indicates a conflict between the interests of an employee or special Government employee of the agency and the performance of his services for the Government, the reviewer shall have the indicated conflict brought to the attention of the employee or special Government employee, grant the employee or special Government employee an opportunity to explain the indicated conflict, and attempt to resolve the indicated conflict. If the indicated conflict cannot be resolved, the reviewer shall forward a written report on the indicated conflict to the Chairman, American Battle Monuments Commission, through the counselor for the agency designated under 5 CFR 735.105(a).

§ 400.735–3 Disciplinary and other remedial action.

An employee or special Government employee of the agency who violates any of the regulations in this part or adopted under § 400.735–1 may be disciplined. The disciplinary action may be in addition to any penalty prescribed by law for the violation. In addition to or in lieu of disciplinary action, remedial action to end conflicts or appearance of conflicts of interest may include but is not limited to:

(a) Changes in assigned duties;

(b) Divestment by the employee or special Government employee of his conflicting interest; or

(c) Disqualification for a particular assignment.

§ 400.735–4 Gifts, entertainment, and favors.

The agency authorizes the exceptions to 5 CFR 735.202(a) set forth in 5 CFR 735.202(b) (1)–(4).

§ 400.735–5 Outside employment and other activity.

An employee of the agency may engage in outside employment or other outside activity not incompatible with the full and proper discharge of the duties and responsibilities of his Government employment. An employee who engages in outside employment shall report that fact in writing to his supervisor.

§400.735–6 Specific provisions of agency regulations governing special Government employees.

(a) Special Government employees of the agency shall adhere to the standards of conduct applicable to employees as set forth in this part and adopted under §400.735–1, except 5 CFR 735.203(b).

(b) Special Government employees of the agency may teach, lecture, or write in a manner not inconsistent with 5 CFR 735.203(c).

(c) Pursuant to 5 CFR 735.305(b), the agency authorizes the same exceptions concerning gifts, entertainment, and favors for special Government employees as are authorized for employees by §400.735–4.

§400.735–7 Statements of employment and financial interests.

(a) In addition to the employees required to submit statements of employment and financial interests under 5 CFR 735.403(a), employees in the following named positions shall submit statements of employment and financial interests:

(1) Secretary;

(2) Officer in Charge, U.S. Office;

(3) Officer in Charge, European Office;

(4) Chief Maintenance Division, European Office;

(5) Chief Purchasing and Contracting Branch, European Office;

(6) Officer in Charge, Mediterranean Office;

(7) Superintendent, Manila American Cemetery.

(b) Each statement of employment and financial interests required by this section shall be submitted to:

American Battle Monuments Commission 2018 Munitions Building, Washington, DC 20360. Attention: Officer in Charge.

Statements shall be submitted in double sealed envelopes, and the inner envelope shall be annotated with the words: ''Statement of Employment and Financial Interests—Attention: Officer in Charge.''

(c) An employee who believes that his position has been improperly included in this section as one requiring the submission of a statement of employment and financial interests may obtain a review of his complaint under the agency's grievance procedure.

§400.735–8 Supplementary statements.

Notwithstanding the filing of the annual supplementary statement required by 5 CFR 735.406, each employee shall at all times avoid acquiring a financial interest that could result, or taking an action that would result, in a violation of the conflicts-of-interest provisions of section 208 of title 18 U.S.C. or the regulations in this part or adopted under §400.735–1.

PART 401—PROCEDURES

AUTHORITY: Sec. 3, 70 Stat. 640, 641; 5 U.S.C. 132 note, 36 U.S.C. 123–125; E.O. 6614, E.O. 9704, 11 FR 2675, 3 CFR 1949–53 Comp., p. 519, E.O. 10057, 10087, 14 FR 2585, 7287, 3 CFR 1949–1953 Comp., pp. 269, 285.

§401.1 Erection of war memorials outside continental limits of United States.

Federal Government agencies, American citizens, States, municipalities, or associations desiring to erect war memorials outside the continental limits of the United States should proceed as follows:

(a) Submit general idea of the memorial to the American Battle Monuments Commission, with a request for the tentative allocation of the site desired.

(b) When site is provisionally allocated, prepare and submit the design of the memorial, together with the inscription, for approval. The design of the memorial will then be referred, in accordance with law, by the Commission to the National Commission of Fine Arts for its approval.

(c) After a site is allocated and the design and inscription are approved, the American Battle Monuments Commission will, if the sponsors so desire, consult with the foreign government concerning the question of securing approval for the erection of the memorial.

(d) When the approval of the foreign government is obtained, the Commission will cooperate, if the sponsors so desire, in obtaining the ground and erection of the memorial. Such cooperation may include construction of

the memorial by the Commission, using funds provided by the sponsors, in which case user charges will be made in accordance with general Government policy.

[35 FR 19666, Dec. 29, 1970]

PART 402—ERECTION OF WAR MEMORIALS IN FOREIGN COUNTRIES BY AMERICAN CITIZENS, STATES, MUNICIPALITIES, OR ASSOCIATIONS

AUTHORITY: Sec. 3, 70 Stat. 640, 641; 5 U.S.C. 132 note, 36 U.S.C. 123, 125; E.O. 6614, E.O. 9704, 11 FR 2675, 3 CFR 1943–1948 Comp., p. 519, E.O. 10057, 10087, 14 FR 2585, 7287, 3 CFR, 1949–1953 Comp., pp. 269, 285.

§ 402.1 Restrictions on erection.

(a) No administrative agency of the United States shall give assistance to American citizens, States, municipalities, or associations in erecting any war memorial outside the continental United States unless the plan has been approved in accordance with § 401.1 above.

(b) It is the opinion of the Commission that no battlefield memorial should be erected to any unit smaller than a division or comparable unit or to an individual, unless the services of such unit or individual clearly were of such distinguished character as to warrant a separate memorial.

(c) It is the opinion of the Commission that, as a general rule, memorials should be erected to organizations rather than to troops from a particular locality of the United States.

(d) The policy of the Commission is to approve plans for memorials in foreign countries only in cases in which the sponsors make adequate and permanent arrangements for their maintenance. If the sponsors so desire, the Commission will maintain such memorials, including those previously existing which it deems worthy of preservation, using funds provided by the sponsors; in such cases it will make user charges in accordance with general Government policy.

[35 FR 19666, Dec. 29, 1970]

PART 403—ERECTION OF MEMORIAL MONUMENTS, BUILDINGS, AND HEADSTONES IN AMERICAN CEMETERIES LOCATED OUTSIDE THE UNITED STATES AND ITS TERRITORIES AND POSSESSIONS

AUTHORITY: Sec. 3, 70 Stat. 641; 36 U.S.C. 123; E.O. 6614, Feb. 26, 1934; E.O. 9704, 3 CFR, 1943–1948 Comp., 519; E.O. 10057, 10087, 3 CFR 1949–1953 Comp., pp. 269, 285.

§ 403.1 Restrictions on erection.

(a) No memorial monuments or buildings shall be placed in these cemeteries unless the design and site have been approved by the American Battle Monuments Commission. No steps toward the erection of any memorial monument or building in these cemeteries should be taken until the idea has first been approved by the American Battle Monuments Commission.

(b) There shall be no variation in the types of headstones officially adopted for use in American cemeteries located outside the United States and its Territories and possessions.

[13 FR 6812, Nov. 19, 1948, as amended at 23 FR 9780, Dec. 19, 1958]

PART 404—PROCEDURES AND GUIDELINES FOR COMPLIANCE WITH THE FREEDOM OF INFORMATION ACT

Sec.
404.1 Purpose.
404.2 General policy.
404.3 Response to requests.
404.4 Denial of access.
404.5 Appeals.
404.6 Fees to be charged.
404.7 Assessment and collection of fees.
404.8 Categories of requesters.
404.9 Waiver of fees.
404.10 Maintenance of statistics.

AUTHORITY: 5 U.S.C. 552.

SOURCE: 53 FR 120, Jan. 5, 1988, unless otherwise noted.

§ 404.1 Purpose.

These guidelines prescribe procedures to obtain information and records of the American Battle Monuments Commission under the Freedom of Information Act of 1986, 5 U.S.C. 552(a)(4)(A)(i). This act requires each agency to promulgate regulations that specify the

schedule of fees for processing FOIA requests and the guidelines when fees may be waived. It applies only to records and information of the Commission which are in the Commission's custody.

§404.2 General policy.

Public requests for information from the records of the American Battle Monuments Commission should be sent to the Freedom of Information Representative, American Battle Monuments Commission, Room 5127, Casimir Pulaski Building, 20 Massachusetts Ave., NW., Washington, DC 20314. They may also be sent to its field offices at the addresses listed below:

(a) Officer-in-Charge, European Office, American Battle Monuments Commission, APO New York 09777.

(b) Officer-in-Charge, Mediterranean Office, American Battle Monuments Commission, APO New York 09794.

(c) Superintendent, Manila American Cemetery, FPO San Francisco 96528.

(d) Superintendent, Corozal American Cemetery, The American Battle Monuments Commission, Attn: AFZU–AG–CRB, Drawer #38, APO Miami, FL 34004–5000.

(e) Superintendent, Mexico City National Cemetery, American Battle Monuments Commission, c/o U.S. Embassy, Mexico, P.O. Box 3087, Laredo, TX 78044–3087.

§404.3 Response to requests.

(a) Except for records and information exempted from disclosure by 5 U.S.C. 552(a)(1), all records of the Commission or in its custody are available to any person who requests them.

(b) Requests for information from the public will be honored within ten working days unless the confidentiality of such information is protected by law, or when it is necessary to search and/or collect records in separate offices or another office of the Commission, which would usually require more than ten working days.

(c) Whenever information cannot be dispatched within ten work days after receipt of request, an interim reply will be sent informing the requester of the status of the request.

(d) The records of the ABMC may be examined and copied between the hours of 8:00 a.m. and 3:30 p.m., Monday through Friday under the supervision of the Freedom of Information representative.

§404.4 Denial of access.

(a) Letters denying confidential information will be dispatched within ten working days of receipt of the request and will be signed by one of the below listed personnel:

(1) Officer-in-Charge, ABMC European Office.

(2) Officer-in-Charge, ABMC Mediterranean Office.

(3) Directors, ABMC Washington Office.

(4) Secretary, ABMC.

(b) Letters denying access to information will:

(1) Provide the requester with the reason for denial,

(2) Inform the requester of his or her right to appeal the denial within 30 days,

(3) Give the name of the official to whom the appeal may be sent.

(c) If an unusual circumstance delays a decision concerning access to information, the requester will be informed of the delay within ten working days of the request's initial receipt. In no case will the decision be delayed more than 20 working days from initial receipt of the request.

(d) A copy of each denial of information will be furnished to the Secretary, ABMC at the time of its dispatch.

§404.5 Appeals.

(a) The Secretary is the appellate authority for all denials except those which he authors. The Chairman is the appellate authority for denials authored by the Secretary.

(b) The requester will be informed of the decision on his or her appeal within 20 working days after its receipt. If the denial is upheld, the requester will be advised that there are provisions for judicial review of such decisions under the Freedom of Information Act.

(c) In the event a court finds that the American Battle Monuments Commission has arbitrarily and capriciously withheld information from the public and a subsequent Office of Personnel

Management investigation finds agency personnel responsible, these personnel will be subject to disciplinary action by the American Battle Monuments Commission.

§ 404.6 Fees to be charged.

While most information will be furnished promptly at no cost as a service to the general public, fees will be charged if the cost of search and duplication warrants. In those instances where ABMC deems it necessary to charge a fee, ABMC shall use the most efficient and least costly methods to comply with requests for documents, drawings, photographs, and any other materials made available under the FOIA. The Freedom of Information Representative shall charge the fees stated in paragraphs (a) through (g) of this section. The Freedom of Information Representative shall, however, waive the fees in the circumstances stated in § 404.9. The specific fees which ABMC shall charge the requester when so required by the FOIA are as follows:

(a) *Manual searches of records.* $9.00 per hour for clerical personnel; $15.00 per hour for supervisory personnel.

(b) *Computer searches for records.* Fees for searches of computerized records shall be the actual cost to the Commission but shall not exceed $12.00 per hour. This fee includes machine time and that of the operator and clerical personnel. The fee for computer printouts shall be $.40 per page. The word ''page'' refers to paper copies of standard computer size, which normally are 11 x 15 inches.

(c) *Copying fee.* The machine copy fee for each page up to 8½ x 14 shall be $.25 per page. Copying fees shall not be charged for the first 100 pages of copies unless the copies are requested for commercial purposes.

(d) $2.00 for each 8 x 10 inch black and white photograph.

(e) $3.00 for each 8 x 10 inch color photograph.

(f) $1.75 per cemetery booklet.

(g) $1.50 per lithograph.

§ 404.7 Assessment and collection of fees.

(a) *Assessment of fees.* (1) ABMC shall assess interest charges on an unpaid bill starting on the 31st day following the day on which the billing was dispatched. Once the fee has been received by ABMC, even if not processed, accrual of interest will cease. Interest will be at the rate prescribed in section 3717 of title 31 U.S.C. and will accrue from the date billing is sent.

(2) *Charges for unsuccessful searches.* If ABMC estimates that charges for an unsuccessful search may exceed $10.00, it shall so inform the requester unless the requester has indicated in advance a willingness to pay fees as high as those anticipated. Such notice shall offer the requester the opportunity to confer with agency personnel with the object of reformulating the request to meet the requester's needs at a lower cost. Dispatch of such a notice shall temporarily suspend the ten day period for response by ABMC until a reply is received from the requester.

(3) *Aggregating requests.* Except for requests that are for a commercial use, ABMC shall not charge for the first two hours of search time or for the first 100 pages of reproduction. However, a requester may not file multiple requests at the same time, each seeking portions of a document or documents, solely in order to avoid payment of fees. When ABMC believes that a group of requesters are acting in concert and attempting to divide a request into a series of requests for the purpose of evading the assessment of fees, ABMC shall aggregate any such requests and charge accordingly. One element to be considered is the time period in which the requests have been made. Before aggregating requests from more than one requester, ABMC must be reasonably certain that the requesters are acting specifically to avoid payment of fees. In no case shall ABMC aggregate multiple requests on unrelated subjects from one requester.

(4) *Advance payments.* ABMC shall not require payment for fees before work has commenced or continued on a request unless:

(i) ABMC estimates that the charges may exceed $25.00. In such an event, ABMC shall notify the requester of the estimated cost and may require an advance payment of an amount up to the full amount of estimated charges; or

(ii) A requester has previously failed to pay a fee within 30 days of the date

of billing. In this event, ABMC shall require the requester to pay the full amount owed plus any applicable interest and make an advance payment of the full amount of the estimated fee before ABMC begins to process a new request or a pending request from that requester.

(iii) When ABMC acts under paragraph (a)(4)(i) or (ii) of this section, the administrative time limits prescribed in §404.3 will begin only after ABMC has received fee payments described above.

(5) *Form of payment.* Remittances shall be in the form of a personal check or bank draft drawn on any bank in the United States, a postal money order, or cash. Remittances shall be made payable to the American Battle Monuments Commission.

(6) ABMC will not defray cost sending records by special methods such as express mail or for transportation of personnel.

(b) *Restrictions on assessing fees.* With the exception of requesters seeking documents for commercial use, section (a)(4)(A)(iv) of the Freedom of Information Act, as amended, requires ABMC to provide the first 100 pages of duplication and the first two hours of search time without charge. ABMC shall not charge fees to any requester, including commercial use requesters, if the cost of collecting a fee would be equal to or greater than the fee itself. ABMC will not begin to assess fees until it has first provided the free search and reproduction authorized.

§404.8 Categories of requesters.

There are four categories of FOIA requesters: Commercial; educational and noncommerical scientific institutions; representatives of the news media; and all others. The fees to be charges each of these categories of requesters are as follows:

(a) *Commerical.* When ABMC receives a request for documents for commerical use, it shall assess charges that recover the full direct costs of searching for, reviewing for release, and duplicating the records sought. Commercial requesters are not entitled to two hours of free search time or 100 free pages of reproduction. ABMC shall recover the cost of searching for the records even if ultimately there is no disclosure of records. Requesters must provide a reasonable description of the records sought.

(b) *Educational and non-commerical scientific institutions.* ABMC shall provide documents to educational and non-commercial scientific institutions for the cost of reproduction alone, except there will be no charge for the first 100 pages of duplication. To be eligible for inclusion in this category, requesters must show that the request is authorized by and under the auspices of a qualifying institution and that the records are not being sought for a commercial use, but are sought in furtherance of scholarly (if the request is from an educational institution) or scientific (if the request is from a non-commercial scientific institution) research. Requesters must provide a reasonable description of the records being sought;

(c) *Representatives of the news media.* ABMC shall provide documents to requesters who are representatives of the news media for the cost of reproduction alone, except there will be no charge for the first 100 pages. A request for records supporting the news-dissemination function of the requester shall not be considered commerical use. Requesters must provide a reasonable description of the records sought;

(d) *All other requesters.* ABMC shall charge requesters who do not fit into any of the above categories fees that recover the full reasonable costs of direct search and reproduction records responsive to the request, except that the first 100 pages of reproduction and the first two hours of search time shall be furnished without charge. Requesters must provide reasonable description of the records sought.

§404.9 Waiver of fees.

The Freedom of Information Representative shall waive all fees assessed under 404, if the following two conditions are satisfied: Disclosure of the information is in the public interest as it is likely to contribute significantly to public understanding of the operations or activities of the government; and disclosure is not primarily in the commercial interest of the requester. The Freedom of Information

Representative shall afford the requester the opportunity to show that he satisfies these two conditions. Under the above standards should ABMC refuse to waive a request for information and the requester petition for a waiver, the senior Freedom of Information Representative will make the determination.

§ 404.10 Maintenance of statistics.

(a) The Freedom of Information Representative shall maintain record of:

(1) The total amount of fees collected by ABMC under this part;

(2) The number of denials of requests for records or information made under this part and the reason for each;

(3) The number of appeals from such denials, together with the results of such appeals, and the reasons for the action upon each appeal that results in a denial of information or documents;

(4) The name and title or position of each person responsible for each denial of records and the number of instances of each;

(5) The results of each proceeding conducted under 5 U.S.C. 552(a)(4)(F), including a report of the disciplinary action against the official or employee primarily responsible for improperly withholding records, or an explanation of why disciplinary action was not taken;

(6) A copy of every rule made by this agency affecting or implementing 5 U.S.C. 552;

(7) A copy of the fee schedule for copies of records and documents requested under this part; and

(8) All other information that indicates efforts to administer fully the letter and spirit of the Freedom of Information Act and the above rules.

(b) The Freedom of Information Act Representative shall annually, within 60 days following the close of each calendar year, prepare a report covering each of the categories of records to be maintained in accordance with the foregoing and submit the same to the Speaker of the House of Representatives and the President of the Senate for referral to the appropriate committees of the Congress.

PART 405—SCHEDULE OF FEES FOR SEARCH AND DUPLICATION OF RECORDS

Sec.
405.1 General.
405.2 Schedule.

AUTHORITY: 5 U.S.C. 552, as amended.

§ 405.1 General.

(a) While most information will be furnished promptly at no cost as a service to the general public, fees will be charged if the cost of search and duplication warrants.

(b) When a fee is to be charged, the individual requesting the information will be informed of the fee, and no work will be performed until he or she has agreed to pay it.

[40 FR 7304, Feb. 19, 1975]

§ 405.2 Schedule.

Fees which may be charged by this Commission for search and duplication of records are as follows:

(a) *Duplication fees*: (1) $2.00 for first 6 pages, 5¢ per page thereafter for photocopying.

(2) $1.50 per 8×10 inch black and white print of photographs.

(3) $2.50 per 8×10 inch color print of photographs.

(b) *Search fees*: (1) $8.00 per hour to search records for specific documents.

(2) $215.00 for selective extracts from Commission computer tapes.

(3) Transportation costs of personnel and records arising from searches for requested information.

[40 FR 7304, Feb. 19, 1975]

PART 406—ENFORCEMENT OF NONDISCRIMINATION ON THE BASIS OF HANDICAP IN PROGRAMS OR ACTIVITIES CONDUCTED BY AMERICAN BATTLE MONUMENTS COMMISSION

Sec.
406.101 Purpose.
406.102 Application.
406.103 Definitions.
406.104—406.109 [Reserved]
406.110 Self-evaluation.
406.111 Notice.
406.112—406.129 [Reserved]

406.130 General prohibitions against discrimination.
406.131—406.139 [Reserved]
406.140 Employment.
406.141—406.148 [Reserved]
406.149 Program accessibility: Discrimination prohibited.
406.150 Program accessibility: Existing facilities.
406.151 Program accessibility: New construction and alterations.
406.152—406.159 [Reserved]
406.160 Communications.
406.161—406.169 [Reserved]
406.170 Compliance procedures.
406.171—406.999 [Reserved]

AUTHORITY: 29 U.S.C. 794.

SOURCE: 51 FR 4577, Feb. 5, 1986, unless otherwise noted.

§ 406.101 Purpose.

This part effectuates section 119 of the Rehabilitation, Comprehensive Services, and Developmental Disabilities Amendments of 1978, which amended section 504 of the Rehabilitation Act of 1973 to prohibit discrimination on the basis of handicap in programs or activities conducted by Executive agencies or the United States Postal Service.

§ 406.102 Application.

This part applies to all programs or activities conducted by the agency.

§ 406.103 Definitions.

For purposes of this part, the term—

Assistant Attorney General means the Assistant Attorney General, Civil Rights Division, United States Department of Justice.

Auxiliary aids means services or devices that enable persons with impaired sensory, manual, or speaking skills to have an equal opportunity to participate in, and enjoy the benefits of, programs or activities conducted by the agency. For example, auxiliary aids useful for persons with impaired vision include readers, Brailled materials, audio recordings, telecommunications devices and other similar services and devices. Auxiliary aids useful for persons with impaired hearing include telephone handset amplifiers, telephones compatible with hearing aids, telecommunication devices for deaf persons (TDD's), interpreters, notetakers, written materials, and other similar services and devices.

Complete complaint means a written statement that contains the complainant's name and address and describes the agency's alleged discriminatory action in sufficient detail to inform the agency of the nature and date of the alleged violation of section 504. It shall be signed by the complainant or by someone authorized to do so on his or her behalf. Complaints filed on behalf of classes or third parties shall describe or identify (by name, if possible) the alleged victims of discrimination.

Facility means all or any portion of buildings, structures, equipment, roads, walks, parking lots, rolling stock or other conveyances, or other real or personal property.

Handicapped person means any person who has a physical or mental impairment that substantially limits one or more major life activities, has a record of such an impairment, or is regarded as having such an impairment.

As used in this definition, the phrase:

(1) *Physical or mental impairment* includes—

(i) Any physiological disorder or condition, cosmetic disfigurement, or anatomical loss affecting one of more of the following body systems: Neurological; musculoskeletal; special sense organs; respiratory, including speech organs; cardiovascular; reproductive; digestive; genitourinary; hemic and lymphatic; skin; and endocrine; or

(ii) Any mental or psychological disorder, such as mental retardation, organic brain syndrome, emotional or mental illness, and specific learning disabilities. The term *physical or mental impairment* includes, but is not limited to, such diseases and conditions as orthopedic, visual, speech, and hearing impairments, cerebral palsy, epilepsy, muscular dystrophy, multiple sclerosis, cancer, heart disease, diabetes, mental retardation, emotional illness, and drug addition and alcholism.

(2) *Major life activities* includes functions such as caring for one's self, performing manual tasks, walking, seeing, hearing, speaking, breathing, learning, and working.

(3) *Has a record of such an impairment* means has a history of, or has been misclassified as having, a mental or

physical impairment that substantially limits one or more major life activities.

(4) *Is regarded as having an impairment* means—

(i) Has a physical or mental impairment that does not substantially limit major life activities but is treated by the agency as constituting such a limitation;

(ii) Has a physical or mental impairment that substantially limits major life activities only as a result of the attitudes of others toward such impairment; or

(iii) Has none of the impairments defined in subparagraph (1) of this definition but is treated by the agency as having such an impairment.

Qualified handicapped person means—

(1) With respect to any agency program or activity under which a person is required to perform services or to achieve a level of accomplishment, a handicapped person who meets the essential eligibility requirements and who can achieve the purpose of the program or activity without modifications in the program or activity that the agency can demonstrate would result in a fundamental alteration in its nature; or

(2) With respect to any other program or activity, a handicapped person who meets the essential eligibility requirements for participation in, or receipt of benefits from, that program or activity.

(3) *Qualified handicapped person* is defined for purposes of employment in 29 CFR 1613.702(f), which is made applicable to this part by § 406.140.

Section 504 means section 504 of the Rehabilitation Act of 1973 (Pub. L. 93–112, 87 Stat. 394 (29 U.S.C. 794)), as amended by the Rehabilitation Act Amendments of 1974 (Pub. L. 93–516, 88 Stat. 1617), and the Rehabilitation, Comprehensive Services, and Developmental Disabilities Amendments of 1978 (Pub. L. 95–602, 92 Stat. 2955). As used in this part, section 504 applies only to programs or activities conducted by Executive agencies and not to federally assisted programs.

[51 FR 4577, Feb. 5, 1986; 51 FR 7543, Mar. 5, 1986]

§§ 406.104—406.109 [Reserved]

§ 406.110 Self-evaluation.

(a) The agency shall, by April 9, 1987, evaluate its current policies and practices, and the effects thereof, that do not or may not meet the requirements of this part, and, to the extent modification of any such policies and practices is required, the agency shall proceed to make the necessary modifications.

(b) The agency shall provide an opportunity to interested persons, including handicapped persons or organizations representing handicapped persons, to participate in the self-evaluation process by submitting comments (both oral and written).

(c) The agency shall, until three years following the completion of the self-evaluation, maintain on file and make available for public inspections:

(1) A description of areas examined and any problems identified, and

(2) A description of any modifications made.

§ 406.111 Notice.

The agency shall make available to employees, applicants, participants, beneficiaries, and other interested persons such information regarding the provisions of this part and its applicability to the programs or activities conducted by the agency, and make such information available to them in such manner as the head of the agency finds necessary to apprise such persons of the protections against discrimination assured them by section 504 and this regulation.

§§ 406.112—406.129 [Reserved]

§ 406.130 General prohibitions against discrimination.

(a) No qualified handicapped person shall, on the basis of handicap, be excluded from participation in, be denied the benefits of, or otherwise be subjected to discrimination under any program or activity conducted by the agency.

(b)(1) The agency, in providing any aid, benefit, or service, may not, directly or through contractual, licensing, or other arrangements, on the basis of handicap—

(i) Deny a qualified handicapped person the opportunity to participate in or benefit from the aid, benefit, or service;

(ii) Afford a qualfied handicapped person an opportunity to participate in or benefit from the aid, benefit, or service that is not equal to that afforded others;

(iii) Provide a qualified handicapped person with an aid, benefit, or service that is not as effective in affording equal opportunity to obtain the same result, to gain the same benefit, or to reach the same level of achievement as that provided to others;

(iv) Provide different or separate aid, benefits, or services to handicapped persons or to any class of handicapped persons than is provided to others unless such action is necessary to provide qualified handicapped persons with aid, benefits, or services that are as effective as those provided to others;

(v) Deny a qualified handicapped person the opportunity to participate as a member of planning or advisory boards; or

(vi) Otherwise limit a qualified handicapped person in the enjoyment of any right, privilege, advantage, or opportunity enjoyed by others receiving the aid, benefit, or service.

(2) The agency may not deny a qualified handicapped person the opportunity to participate in programs or activities that are not separate or different, despite the existence of permissibly separate or different programs or activities.

(3) The agency may not, directly or through contractual or other arrangements, utilize criteria or methods of administration the purpose or effect of which would—

(i) Subject qualified handicapped persons to discrimination on the basis of handicap; or

(ii) Defeat or substantially impair accomplishment of the objectives of a program or activity with respect to handicapped persons.

(4) The agency may not, in determining the site or location of a facility, make selections the purpose or effect of which would—

(i) Exclude handicapped persons from, deny them the benefits of, or otherwise subject them to discrimination under any program or activity conducted by the agency; or

(ii) Defeat or substantially impair the accomplishment of the objectives of a program or activity with respect to handicapped persons.

(5) The agency, in the selection of procurement contractors, may not use criteria that subject qualified handicapped persons to discrimination on the basis of handicap.

(c) The exclusion of nonhandicapped persons from the benefits of a program limited by Federal statute or Executive order to handicapped persons or the exclusion of a specific class of handicapped persons from a program limited by Federal statute or Executive order to a different class of handicapped persons is not prohibited by this part.

(d) The agency shall administer programs and activities in the most integrated setting appropriate to the needs of qualified handicapped persons.

§§ 406.131—406.139 [Reserved]

§ 406.140 Employment.

No qualified handicapped person shall, on the basis of handicap, be subjected to discrimination in employment under any program or activity conducted by the agency. The definitions, requirements, and procedures of section 501 of the Rehabilitation Act of 1973 (29 U.S.C. 791), as established by the Equal Employment Opportunity Commission in 29 CFR part 1613, shall apply to employment in federally conducted programs or activities.

§§ 406.141—406.148 [Reserved]

§ 406.149 Program accessibility: Discrimination prohibited.

Except as otherwise provided in § 406.150, no qualified handicapped person shall, because the agency's facilities are inaccessible to or unusable by handicapped persons, be denied the benefits of, be excluded from participation in, or otherwise be subjected to discrimination under any program or activity conducted by the agency.

§ 406.150 Program accessibility: Existing facilities.

(a) *General.* The agency shall operate each program or activity so that the

program or activity, when viewed in its entirety, is readily accessible to and usable by handicapped persons. This paragraph does not—

(1) Necessarily require the agency to make each of its existing facilities accessible to and usable by handicapped persons; or

(2) Require the agency to take any action that it can demonstrate would result in a fundamental alteration in the nature of a program or activity or in undue financial and administrative burdens. In those circumstances where agency personnel believe that the proposed action would fundamentally alter the program or activity or would result in undue financial and administrative burdens, the agency has the burden of proving that compliance with § 406.150(a) would result in such alteration or burdens. The decision that compliance would result in such alteration or burdens must be made by the agency head or his or her designee after considering all agency resources available for use in the funding and operation of the conducted program or activity, and must be accompanied by a written statement of the reasons for reaching that conclusion. If an action would result in such an alteration or such burdens, the agency shall take any other action that would not result in such an alteration or such burdens but would nevertheless ensure that handicapped persons receive the benefits and services of the program or activity.

(b) *Methods.* The agency may comply with the requirements of this section through such means as redesign of equipment, reassignment of services to accessible buildings, assignment of aides to beneficiaries, home visits, delivery of services at alternate accessible sites, alteration of existing facilities and construction of new facilities, use of accessible rolling stock, or any other methods that result in making its programs or activities readily accessible to and usable by handicapped persons. The agency is nor required to make structural changes in existing facilities where other methods are effective in achieving compliance with this section. The agency, in making alterations to existing buildings, shall meet accessibility requirements to the extent compelled by the Architectural Barriers Act of 1968, as amended (42 U.S.C. 4151–4157), and any regulations implementing it. In choosing among available methods for meeting the requirements of this section, the agency shall give priority to those methods that offer programs and activities to qualified handicapped persons in the most integrated setting appropriate.

(c) *Time period for compliance.* The agency shall comply with the obligations established under this section by June 6, 1986, except that where structural changes in facilities are undertaken, such changes shall be made by April 7, 1989, but in any event as expeditiously as possible.

(d) *Transition plan.* In the event that structural changes to facilities will be undertaken to achieve program accessibility, the agency shall develop, by October 7, 1986, a transition plan setting forth the steps necessary to complete such changes. The agency shall provide an opportunity to interested persons, including handicapped persons or organizations representing handicapped persons, to participate in the development of the transition plan by submitting comments (both oral and written). A copy of the transition plan shall be made available for public inspection. The plan shall, at a minimum—

(1) Identify physical obstacles in the agency's facilities that limit the accessibility of its programs or activities to handicapped persons;

(2) Describe in detail the methods that will be used to make the facilities accessible;

(3) Specify the schedule for taking the steps necessary to achieve compliance with this section and, if the time period of the transition plan is longer than one year, identify steps that will be taken during each year of the transition period; and

(4) Indicate the official responsible for implementation of the plan.

[51 FR 4577, Feb. 5, 1986; 51 FR 7543, Mar. 5, 1986]

§ 406.151 Program accessibility: New construction and alterations.

Each building or part of a building that is constructed or altered by, on behalf of, or for the use of the agency

shall be designed, constructed, or altered so as to be readily accessible to and usable by handicapped persons. The definitions, requirements, and standards of the Architectural Barriers Act (42 U.S.C. 4151–4157), as established in 41 CFR 101–19.600 to 101–19.607, apply to buildings covered by this section.

§§ 406.152—406.159 [Reserved]

§ 406.160 Communications.

(a) The agency shall take appropriate steps to ensure effective communication with applicants, participants, personnel of other Federal entities, and members of the public.

(1) The agency shall furnish appropriate auxiliary aids where necessary to afford a handicapped person an equal opportunity to participate in, and enjoy the benefits of, a program or activity conducted by the agency.

(i) In determining what type of auxiliary aid is necessary, the agency shall give primary consideration to the requests of the handicapped person.

(ii) The agency need not provide individually prescribed devices, readers for personal use or study, or other devices of a personal nature.

(2) Where the agency communicates with applicants and beneficiaries by telephone, telecommunication devices for deaf persons (TDD's) or equally effective telecommunication systems shall be used.

(b) The agency shall ensure that interested persons, including persons with impaired vision or hearing, can obtain information as to the existence and location of accessible services, activities, and facilities.

(c) The agency shall provide signage at a primary entrance to each of its inaccessible facilities, directing users to a location at which they can obtain information about accessible facilities. The international symbol for accessibility shall be used at each primary entrance of an accessible facility.

(d) This section does not require the agency to take any action that it can demonstrate would result in a fundamental alteration in the nature of a program or activity or in undue financial and administrative burdens. In those circumstances where agency personnel believe that the proposed action would fundamentally alter the program or activity or would result in undue financial and administrative burdens, the agency has the burden of proving that compliance with § 406.160 would result in such alteration or burdens. The decision that compliance would result in such alteration or burdens must be made by the agency head or his or her designee after considering all agency resources available for use in the funding and operation of the conducted program or activity, and must be accompanied by a written statement of the reasons for reaching that conclusion. If an action required to comply with this section would result in such an alteration or such burdens, the agency shall take any other action that would not result in such an alteration or such burdens but would nevertheless ensure that, to the maximum extent possible, handicapped persons receive the benefits and services of the program or activity.

§§ 406.161—406.169 [Reserved]

§ 406.170 Compliance procedures.

(a) Except as provided in paragraph (b) of this section, this section applies to all allegations of discrimination on the basis of handicap in programs or activities conducted by the agency.

(b) The agency shall process complaints alleging violations of section 504 with respect to employment according to the procedures established by the Equal Employment Opportunity Commission in 29 CFR part 1613 pursuant to section 501 of the Rehabilitation Act of 1973 (29 U.S.C. 791).

(c) The Director, Personnel and Administration shall be responsible for coordinating implementation of this section. Complaints may be sent to the Director, Personnel and Administration, American Battle Monuments Commission, Room 5127, Pulaski Building, 20 Massachusetts Ave., NW., Washington, DC 20314.

(d) The agency shall accept and investigate all complete complaints for which it has jurisdiction. All complete complaints must be filed within 180 days of the alleged act of discrimination. The agency may extend this time period for good cause.

(e) If the agency receives a complaint over which it does not have jurisdiction, it shall promptly notify the complainant and shall make reasonable efforts to refer the complaint to the appropriate government entity.

(f) The agency shall notify the Architectural and Transportation Barriers Compliance Board upon receipt of any complaint alleging that a building or facility that is subject to the Architectural Barriers Act of 1968, as amended (42 U.S.C. 4151–4157), or section 502 of the Rehabilitation Act of 1973, as amended (29 U.S.C. 792), is not readily accessible to and usable by handicapped persons.

(g) Within 180 days of the receipt of a complete complaint for which it has jurisdiction, the agency shall notify the complainant of the results of the investigation in a letter containing—

(1) Findings of fact and conclusions of law;

(2) A description of a remedy for each violation found;

(3) A notice of the right to appeal.

(h) Appeals of the findings of fact and conclusions of law or remedies must be filed by the complainant within 90 days of receipt from the agency of the letter required by § 406.170(g). The agency may extend this time for good cause.

(i) Timely appeals shall be accepted and processed by the head of the agency.

(j) The head of the agency shall notify the complainant of the results of the appeal within 60 days of the receipt of the request. If the head of the agency determines that additional information is needed from the complainant, he or she shall have 60 days from the date of receipt of the additional information to make his or her determination on the appeal.

(k) The time limits cited in paragraphs (g) and (j) of this section may be extended with the permission of the Assistant Attorney General.

(l) The agency may delegate its authority for conducting complaint investigations to other Federal agencies, except that the authority for making the final determination may not be delegated to another agency.

[51 FR 4577, Feb. 5, 1986, as amended at 51 FR 4577, Feb. 5, 1986]

§§ 406.171—406.999 [Reserved]

PARTS 407—499 [RESERVED]

CHAPTER V—SMITHSONIAN INSTITUTION

Part		*Page*
504	Rules and regulations governing Smithsonian Institution buildings and grounds	48
520	Rules and regulations governing the buildings and grounds of the National Zoological Park of the Smithsonian Institution	50
530	Claims against the Smithsonian Institution including the National Gallery of Art, the John F. Kennedy Center for the Performing Arts and the Woodrow Wilson International Center for Scholars	52
531–599	[Reserved]	

PART 504—RULES AND REGULATIONS GOVERNING SMITHSONIAN INSTITUTION BUILDINGS AND GROUNDS

Sec.
504.1 General.
504.2 Recording presence.
504.3 Preservation of property.
504.4 Conformity with signs and emergency directions.
504.5 Nuisances.
504.6 Gambling.
504.7 Intoxicating beverages and narcotics.
504.8 Soliciting, vending, debt collection, and distribution of handbills.
504.9 Placards, signs, banners and flags.
504.10 Dogs and other animals.
504.11 Photographs for news, advertising, or commercial purposes.
504.12 Items to be checked.
504.13 Vehicular and pedestrian traffic.
504.14 Weapons and explosives.
504.15 Nondiscrimination.
504.16 Penalties.

AUTHORITY: Secs. 1–9, 65 Stat. 634, as amended, secs. 1–4, 78 Stat. 365; 40 U.S.C. 193n–193w.

SOURCE: 33 FR 6656, May 1, 1968, unless otherwise noted.

§ 504.1 General.

These rules and regulations apply to all buildings and grounds of the Smithsonian Institution, as defined in section 3, 78 Stat. 366; 40 U.S.C. 193v(1) (A) and (C), and to all persons entering in or on such buildings and grounds, hereinafter referred to as the premises

§ 504.2 Recording presence.

Except as otherwise ordered, Smithsonian buildings shall be closed to the public after normal visiting hours. Such buildings, or portions thereof, shall also be closed to the public in emergency situations and at such other times as may be necessary for the orderly conduct of business. Whenever the buildings are closed to the public for any reason, visitors will immediately leave the premises upon being requested by a guard or other authorized individuals. Admission to such premises during periods when closed to the public will be limited to authorized individuals who will be required to register and identify themselves when requested by guards or other authorized individuals.

§ 504.3 Preservation of property.

It is unlawful willfully to destroy, damage, or remove property or any part thereof. Any parcels, portfolios, bags, or containers of any kind may be required to be opened and the contents identified prior to removal from the premises. In order to remove any property from the premises, a properly completed property pass signed by an authorized official of the Smithsonian Institution may be required prior to removal.

§ 504.4 Conformity with signs and emergency directions.

Persons in or on the premises shall comply with official signs of a prohibitory or directory nature and with the directions of authorized individuals.

§ 504.5 Nuisances.

The use of loud, abusive, or otherwise improper language; unwarranted loitering, sleeping or assembly; the creation of any hazard to persons or things; improper disposal of rubbish; spitting, prurient prying; the commission of any obscene or indecent act, or any other unseemly or disorderly conduct on the premises; throwing articles of any kind from or within a building; or climbing upon any part of a building is prohibited.

§ 504.6 Gambling.

Participating in games for money or other personal property or the operation of gambling devices, the conduct of a lottery or pool, or the selling or purchasing of numbers tickets in or on the premises is prohibited.

§ 504.7 Intoxicating beverages and narcotics.

Entering the premises or the operating of a motor vehicle thereon by a person under the influence of any intoxicating beverage or narcotic drug or the use of such drug in or on the premises is prohibited. Consumption of intoxicating beverages on the premises is prohibited unless officially authorized.

§504.8 Soliciting, vending, debt collection, and distribution of handbills

The soliciting of alms and contributions, commercial soliciting and vending of all kinds, the display or distribution of commercial advertising, or the collecting of private debts, in or on the premises is prohibited. This rule does not apply to national or local drives for funds for welfare, health, and other purposes sponsored or approved by the Smithsonian Institution concessions, or personal notices posted by employees on authorized bulletin boards. Distribution of material such as pamphlets, handbills, and flyers is prohibited without prior approval of authorized individuals.

§504.9 Placards, signs, banners and flags.

The displaying or carrying of placards, signs, banners, or flags is prohibited unless officially authorized.

§504.10 Dogs and other animals.

Dogs and other animals, except seeing-eye dogs, shall not be brought upon the premises for other than official purposes.

§504.11 Photographs for news, advertising, or commercial purposes.

No photographs for advertising or any other commercial purpose may be taken on the premises unless officially authorized.

§504.12 Items to be checked.

Umbrellas, canes (not needed to assist in walking), or other objects capable of inflicting damage to property or exhibits may be required to be checked in buildings where checking facilities are provided.

§504.13 Vehicular and pedestrian traffic.

(a) Drivers of all vehicles in or on the premises shall drive in a careful and safe manner at all times and shall comply with the signals and directions of the guards and all posted traffic signs.

(b) The blocking of entrances, driveways, walks, loading platforms, or fire hydrants in or on property is prohibited. Parking without authority, or parking in unauthorized locations or in locations reserved for other persons or contrary to the direction of posted signs, is prohibited. This paragraph may be supplemented from time to time by the issuance and posting of such additional traffic and parking directives as may be required, and such directives shall have the same force and effect as if made a part thereof.

§504.14 Weapons and explosives.

No person while on the premises shall carry firearms, other dangerous or deadly weapons, or explosives, either openly or concealed, except for official purposes.

§504.15 Nondiscrimination.

There shall be no discrimination by segregation or otherwise against any person or persons because of race, religion, color, or national origin in furnishing or by refusing to furnish to such person or persons the use of any facility of a public nature, including all services, privileges, accommodations, and activities provided thereby on the premises.

§504.16 Penalties.

Section 6 of the Smithsonian Institution Special Policing Statute, Act of October 24, 1951, 65 Stat. 635, 40 U.S.C. 193(s) states that:

> Whoever violates any provision of sections 193o–193q of this Title, or any regulation prescribed under section 193r of this Title, shall be fined not more than $100 or imprisoned not more than sixty days, or both, prosecution for such offenses to be had in the District of Columbia Court of General Sessions, upon information by the U.S. attorney or any of his assistants: *Provided*, That in any case where, in the commission of such offense, property is damaged in an amount exceeding $100, the amount of the fine for the offense may be not more than $5,000, the period of imprisonment for the offense may be not more than 5 years and prosecution shall be had in the U.S. District Court for the District of Columbia by indictment, or if the defendant, after he has been advised of the nature of the charge and of his rights, waives in open court prosecution by indictment, by information by the U.S. attorney or any of his assistants.

PART 520—RULES AND REGULATIONS GOVERNING THE BUILDINGS AND GROUNDS OF THE NATIONAL ZOOLOGICAL PARK OF THE SMITHSONIAN INSTITUTION

Sec.
520.1 General.
520.2 Recording presence.
520.3 Preservation of property.
520.4 Protection of zoo animals.
520.5 Conformity with signs and emergency directions.
520.6 Nuisances.
520.7 Gambling.
520.8 Intoxicating beverages and narcotics.
520.9 Soliciting, vending, debt collection, and distribution of handbills.
520.10 Placards, signs, banners, and flags.
520.11 Dogs and other animals.
520.12 Photographs for news, advertising, or commercial purposes.
520.13 Items to be checked.
520.14 Vehicular and pedestrian traffic.
520.15 Weapons and explosives.
520.16 Nondiscrimination.
520.17 Lost and found.
520.18 Penalties.

AUTHORITY: Secs. 1–9, 65 Stat. 634, as amended, secs. 1–4, 78 Stat. 365; 40 U.S.C. 193n–193w.

SOURCE: 33 FR 17175, Nov. 20, 1968, unless otherwise noted.

§ 520.1 General.

The rules and regulations in this part apply to all buildings and grounds of the National Zoological Park of the Smithsonian Institution, as defined in sec. 3, 78 Stat. 366; 40 U.S.C. 193v(1)(B), and to all persons entering in or on such buildings and grounds, hereinafter referred to as the premises.

§ 520.2 Recording presence.

Except as otherwise ordered, National Zoological Park buildings and grounds shall be closed to the public after posted visiting hours. Such buildings and grounds, or portions thereof, shall be also closed to the public in emergency situations and at such other times as may be necessary for the orderly conduct of business. Whenever the buildings and grounds or portions thereof are closed to the public for any reason, visitors will immediately leave the premises upon being requested by a police officer or other authorized individual. Admission to such premises during periods when closed to the public will be limited to authorized individuals who will be required to register and identify themselves when requested by police officers or other authorized individuals.

§ 520.3 Preservation of property.

It is unlawful willfully to destroy, damage, or remove property or any part thereof. Any parcels, portfolios, bags, or containers of any kind may be required to be opened and the contents identified prior to removal from the premises. In order to remove any property from the premises, a properly completed property pass signed by an authorized official of the National Zoological Park may be required prior to removal.

§ 520.4 Protection of zoo animals.

Except for official purposes, no person shall:

(a) Kill, injure, or disturb any exhibit or research animal by any means except to secure personal safety;

(b) Pet, attempt to pet, handle, move, or remove exhibit or research animals;

(c) Feed exhibit or research animals, except in strict accordance with authorized signs;

(d) Catch, attempt to catch, trap, remove, or kill any free roaming animals inhabiting the premises;

(e) Go over, under, between, or otherwise cross any guardrail, fence, moat, wall, or any other safety barrier; or to seat, stand, or hold children over any of the above-mentioned barriers;

(f) Throw or toss rocks, or any other missiles into, from, or while on premises;

(g) Bring strollers, baby carriages, or other conveyances, except wheel chairs, into exhibit buildings and public restrooms;

(h) Engage in ball games, or any athletic activity, except in places as may be officially designated for such purposes;

(i) Smoke or carry lighted cigarettes, cigars, or pipes into exhibit buildings, or to have a fire of any kind on the premises; or

(j) Damage, deface, pick, or remove any herb, shrub, bush, tree, or turf, or portion thereof, on the premises.

§520.5 Conformity with signs and emergency directions.

Persons in or on the premises shall comply with official signs of a prohibitory or directory nature and with the directions of authorized individuals.

§520.6 Nuisances.

The use of loud, abusive, or otherwise improper language; unwarranted loitering, sleeping or assembly; the creation of any hazard to persons or things; improper disposal of rubbish; spitting; prurient prying; the commission of any obscene or indecent act, or any other unseemly or disorderly conduct on the premises; throwing articles of any kind on the premises, or climbing upon any part of the building is prohibited.

§520.7 Gambling.

Participating in games for money or other personal property or the operation of gambling devices, the conduct of a lottery or pool, or the selling or purchasing of numbers tickets in or on the premises is prohibited.

§520.8 Intoxicating beverages and narcotics.

Entering the premises or the operating of a motor vehicle thereon by a person under the influence of any intoxicating beverage or narcotic drug or the use of such drug in or on the premises is prohibited. Consumption of intoxicating beverages on the premises is prohibited, unless officially authorized.

§520.9 Soliciting, vending, debt collection, and distribution of handbills.

The soliciting of alms and contributions, commercial soliciting and vending of all kinds, the display or distribution of commercial advertising or the collecting of private debts, in or on the premises is prohibited. This rule does not apply to national or local drives for funds for welfare, health, and other purposes sponsored or approved by the National Zoological Park, concessions, or personal notices posted by employees on authorized bulletin boards. Distribution of material such as pamphlets, handbills, and flyers is prohibited without prior approval of authorized individuals.

§520.10 Placards, signs, banners, and flags.

The displaying or carrying of placards, signs, banners, or flags is prohibited unless officially authorized.

§520.11 Dogs and other animals.

Dogs and other animals, except seeing-eye dogs, shall not be brought upon the premises for other than official purposes unless confined to automobiles.

§520.12 Photographs for news, advertising, or commercial purposes.

No photographs for advertising or any other commercial purpose may be taken on the premises unless officially authorized.

§520.13 Items to be checked.

Umbrellas, canes (not needed to assist in walking), or other objects capable of inflicting damage to property or exhibits may be required to be checked at the police station where checking facilities are provided.

§520.14 Vehicular and pedestrian traffic.

(a) Drivers of all vehicles in or on the premises shall drive in a careful and safe manner at all times and shall comply with the signals and directions of the police and all posted traffic signs.

(b) The blocking of entrances, driveways, walks, loading platforms, or fire hydrants in or on property is prohibited. Parking without authority, or parking in unauthorized locations or in locations reserved for other persons or contrary to the direction of posted signs, is prohibited. This paragraph may be supplemented from time to time by the issuance and posting of such additional traffic and parking directives as may be required, and such directives shall have the same force and effect as if made a part thereof.

§520.15 Weapons and explosives.

No person while on the premises shall carry firearms, other dangerous or deadly weapons, or explosives, either openly or concealed, except for official purposes, nor shall any person discharge or set off any firework or explosive of any nature on the premises.

§ 520.16 Nondiscrimination.

There shall be no discrimination by segregation or otherwise against any person or persons because of race, religion, color, or national origin in furnishing or by refusing to furnish to such person or persons the use of any facility of a public nature, including all services, privileges, accommodations, and activities provided thereby on the premises.

§ 520.17 Lost and found.

(a) Lost articles or money which are found in areas covered by this part shall be immediately referred to the police station. Proper records shall be kept at Police Headquarters of the receipt and disposition of such articles. If an article or money found on park areas and referred to Zoo Police Headquarters is not claimed by the owner within a period of 60 days, it shall be returned to the finder and appropriate receipt obtained; except that in the case of National Zoological Park employees, articles or money turned in which are not claimed by the owner within 60 days shall be considered as abandoned to the Smithsonian Institution. Such articles or money shall be transferred to the Treasurer of the Smithsonian Institution, who shall make suitable disposition of articles and remit all proceeds of such disposition and all unclaimed money into the unrestricted funds of the Smithsonian Institution.

(b) The abandonment of any personal property in any of the park areas is prohibited.

§ 520.18 Penalties.

Section 6 of the Smithsonian Institution Special Policing Statute, Act of October 24, 1951, 65 Stat. 635, 40 U.S.C. 193 (s) states that:

Whoever violates any provision of sections 193o–193q of this title, or any regulation prescribed under section 193r of this Title, shall be fined not more than $100 or imprisoned not more than 60 days, or both, prosecution for such offenses to be had in the District of Columbia Court of General Sessions, upon information by the United States attorney or any of his assistants: *Provided,* That in any case where, in the commission of such offense, property is damaged in an amount exceeding $100, the amount of the fine for the offense may be not more than $5,000, the period of imprisonment for the offense may be not more than 5 years and prosecution shall be had in the U.S. District Court for the District of Columbia by indictment, or if the defendant, after he has been advised of the nature of the charge and of his rights, waives in open court prosecution by indictment, by information by the U.S. attorney or any of his assistants.

PART 530—CLAIMS AGAINST THE SMITHSONIAN INSTITUTION INCLUDING THE NATIONAL GALLERY OF ART, THE JOHN F. KENNEDY CENTER FOR THE PERFORMING ARTS AND THE WOODROW WILSON INTERNATIONAL CENTER FOR SCHOLARS

AUTHORITY: 20 U.S.C. 41, *et seq.*

§ 530.1 Tort claims.

The Smithsonian Institution (which encompasses the National Gallery of Art, the John F. Kennedy Center for the Performing Arts and the Woodrow Wilson International Center for Scholars) falls within the purview of the Federal Tort Claims Act. Internal procedures for implementing the Act follow the current general guidance issued by the U.S. Department of Justice in 28 CFR part 14. Information on specific claims procedures can be obtained as follows:

(a) Smithsonian Institution: Office of the General Counsel, Smithsonian Institution, Washington, DC 20560.

(b) National Gallery of Art: Administrator, National Gallery of Art, Washington, DC 20565.

(c) John F. Kennedy Center for the Performing Arts: Director of Operations, John F. Kennedy Center for the Performing Arts, Washington, DC 20566.

(d) Woodrow Wilson International Center for Scholars: Assistant Director for Administration, Woodrow Wilson International Center for Scholars, Smithsonian Institution, Washington, DC 20560.

[49 FR 9421, Mar. 13, 1984]

PARTS 531—599 [RESERVED]

CHAPTER VI—[RESERVED]

CHAPTER VII—LIBRARY OF CONGRESS

Part		*Page*
701	Procedures and services	56
702	Conduct on Library premises	70
703	Availability of Library of Congress records	74
704	National Film Registry of the Library of Congress	77
705	Financial Administration	80
706—799	[Reserved]	

EDITORIAL NOTE: The regulations in this chapter VII were formerly codified in 44 CFR chapter V.

PART 701—PROCEDURES AND SERVICES

Sec.
701.1 Application for employment.
701.2 Access to Library buildings.
701.3 Removal of materials from the Library buildings.
701.4 Information about the Library.
701.5 The Library's reading rooms and public use thereof.
701.6 Service of the general collections.
701.7 Reference and bibliographic assistance.
701.8 Special study facilities.
701.9 Loans of library materials.
701.10 Loans of library materials for blind and other physically handicapped persons.
701.11 Lending of materials from the Library for exhibition.
701.12 Photoduplication service.
701.13 Service of African and Middle Eastern materials.
701.14 Service of Asian materials.
701.15 Service of European materials.
701.16 Service of folklife materials.
701.17 Service of Hispanic materials.
701.18 Service of legal materials.
701.19 Service of local history and genealogical materials.
701.20 Service of manuscript materials.
701.21 Service of maps and cartographic materials.
701.22 Service of microfilmed materials.
701.23 Service of motion picture and television materials.
701.24 Service of music materials.
701.25 Service of prints and photographs.
701.26 Service of rare books and special collections.
701.27 Service of scientific and technical materials.
701.28 Service of serial materials.
701.29 Service of sound recordings.
701.30 Cataloging distribution.
701.31 Library of Congress publications.
701.32 Offers of materials for purchase.
701.33 Acquisition of library materials by non-purchase means and disposition of surplus library materials.
701.34 Contracting officers.
701.35 Credit and recognition policy on the use of the Library name, seal, or logo.
701.36 Use of the Seal of the Library of Congress and the Library of Congress Trust Fund Board.

AUTHORITY: 2 U.S.C. 136; 18 U.S.C. 1017.

§ 701.1 Application for employment.

The Library of Congress is an Excepted Service Legislative Branch agency. As such, it has its own independent merit system, and applicants do not need Civil Service status to apply for its positions. The Library has a wide range of clerical, technical, and professional positions (the latter being primarily oriented to library operations such as processing, cataloging, and reference, but with some positions in non-librarian occupations such as computer, subject area and research analyst specialists). The Library's Employment Office is located in Room LM–107, James Madison Building, First Street and Independence Avenue, SE., Washington, DC 20540. Information about current employment needs and the procedure for application may be obtained by either visiting this office (Monday–Friday, 8:30 a.m. to 4:30 p.m.), calling during these hours at (202) 287–JOBS, or writing to the above address. A 24-hour recording of general information is available at (202) 287–5295.

[46 FR 48660, Oct. 2, 1981]

§ 701.2 Access to Library buildings.

(a) In accordance with the Library's general policy, persons other than staff members may be admitted to the Library buildings and to the various areas therein that are open to the public during the announced hours of public opening. Such persons may be admitted to other areas within the buildings and at other times only in accordance with established access regulations.

(b) Persons having legitimate business in buildings closed to the public may be admitted after identification by responsible officials in the building or by authority as evidenced by a building access pass issued by the Associate Librarian for Management.

[35 FR 10588, June 30, 1970. Redesignated at 38 FR 27049, Sept. 28, 1973, and amended at 46 FR 48660, Oct. 2, 1981]

§ 701.3 Removal of materials from the Library buildings.

No material may be removed from the Library buildings without the proper stamp, pass, or other authorization as prescribed by regulations established by The Librarian of Congress. All property including, but not limited to, suitcases, briefcases, handbags, large envelopes, packages, and office

equipment may be inspected upon leaving Library buildings in order to prevent the improper removal of property belonging to the U.S. Government.

[51 FR 22073, June 18, 1986]

§ 701.4 Information about the Library.

Information about the activities, program, services, organization, and history of the Library of Congress is provided by the Information Office, which has primary responsibility for responding, or for arranging for other divisions of the Library to respond, to inquiries on these subjects from the public and from representatives of public-information media. Such information is provided through publications and through individual response by telephone, by mail, and in personal conference. For convenience of the public, the office administers information counters in the James Madison and Thomas Jefferson Buildings; its staff answers visitors' inquiries about the Library but does not provide reference service for readers wishing to use the Library's collections. Free publications about the Library and some price publications and facsimiles of famous documents are available at this counter.

[35 FR 10588, June 30, 1970. Redesignated at 38 FR 27049, Sept. 28, 1973, and amended at 51 FR 22073, June 18, 1986]

§ 701.5 The Library's reading rooms and public use thereof.

(a) All members of the public wishing to use materials from the Library's collections first must obtain a User Card. The Library will issue User Cards, in accordance with established access regulations, to those persons who present a valid photo identification card containing their name and current address. The Library-issued User Card will include the name, digitized photograph, and signature of the user. It must be presented when requesting materials housed in the book stacks or other non-public areas or upon request of a Library staff member. In accordance with Library regulations which prescribe the conditions of reader registration and use of Library materials, presentation of a User Card may be required for entry into certain reading rooms. The Library will maintain the information found on the User Cards, including the digitized photograph and other pertinent information, in an automated file for collections security purposes. Access to the automated file shall be limited to only those Library staff whose official duties require access. The automated file shall be physically separated and accessible only from inside the Library.

(b) Materials in the general classified collections of the Library are serviced in the Main and Local History and Genealogy reading rooms (Thomas Jefferson Building), and the Science and Social Science reading rooms (John Adams Building). Special collections, as explained further in subsequent sections, are serviced in the following reading rooms; Archive of Folk Culture, European, Microform, and Rare Book and Special Collections (Thomas Jefferson Building), African and Middle East and Asian (Adams Building), and Geography and Map, Law Library, Manuscript, Motion Picture and Television, Newspaper and Current Periodical, Performing Arts, Prints and Photographs, and Recorded Sound Reference Center (James Madison Memorial Building). Reference and bibliographic assistance is provided by the staff on duty in the reading rooms, to the extent necessary to supplement the reader's prior use of library resources elsewhere and/or to facilitate use of the Library's collections.

[51 FR 22073, June 18, 1986, as amended at 60 FR 34853, July 5, 1995]

§ 701.6 Service of the general collections.

(a) Requests for materials in the general classified collections are submitted by readers on forms provided for that purpose. Available materials so requested are located and delivered to readers by the staff. Subject to specified limitations, materials may be reserved for continued use. Access to the bookstacks is permitted only under regulations established by the Librarian of Congress.

(b) *Definitions.*

(1) *Security* means administration of continuing, effective controls in areas where materials are housed for the purpose of preprocessing or processing, storage, access, or use. These controls

are designed to safeguard against theft, loss, misplacement, or damage from improper use or vandalism and may vary as appropriate to the quality, monetary value, replaceability, fragility, or other special or unusual conditions relating to the materials concerned.

(2) *Library material* means:

(i) Items in all formats (including, but not limited to, books and pamphlets; documents; manuscripts; maps; microfiche, microfilms, and other microforms; motion pictures, photographs, posters, prints, drawings, videotapes, and other visual materials; newspapers and periodicals; recorded discs, tapes, or audio/video/digital materials in other formats) either in the collections of the Library of Congress or acquired for and in process for the Library's collections;

(ii) Objects such as musical instruments, printing blocks, copper engraving plates, paintings, and scrolls, and

(iii) Control files, which are manual or automated files essential to the physical or intellectual access to Library materials, such as catalogs, computer tapes, finding aids, and shelflists. These include items that are acquired as an integral part of Library materials and are accessioned into the collections with them permanent inventory records, public catalogs, and other finding aids.

(3) *Security-controlled environment* means, but is not limited to: general and special reading rooms and research facilities where materials are issued under controlled circumstances for use of readers; the bookstacks and other storage facilities where materials are housed when not in use; and work areas where materials are held temporarily for processing.

(c) *General policy for use of Library materials.* Materials retrieved for readers' use shall be used only in assigned reading rooms or research facilities. Use elsewhere in Library buildings requires specific authorization from designated staff members of the custodial unit. Use of materials assigned to reference collections shall be in accordance with established regulations. To minimize the risk of theft, loss, or damage when the materials are removed from designated storage areas, the conditions of availability and use will vary as appropriate to the quality of materials, their monetary value, replaceability, format, physical condition, and the purpose for which they are to be circulated—reader use within the Library, exhibits, preservation, photoduplication, or loan outside the Library. Unless otherwise specified by Library regulations, and/or legal or contractual obligations, the conditions and procedures for use of materials, including duplication, either inside or outside of the Library buildings, shall be determined by or in consultation with the unit head responsible for the custody of the material used.

(1) Any material removed from the security-controlled environment of a reading room or storage area, and meeting the established criteria must be charged as an internal or external loan through the Loan Division, in accordance with established loan regulations. The security of in-process material, and special collections material not meeting the criteria of these regulations, is the responsibility of the division chief or equivalent Library officer with physical control of the material. That division shall determine whether or not a Loan Division internal charge must be created when an item is removed for use. If a Loan Division record is not created, the division shall create and maintain a local record until the item is returned.

(2) When the period of use is completed, all materials shall be returned immediately to the custodial unit to be placed in designated shelf or other locations in assigned storage areas. Charge records for the returned materials shall be removed from the charge files.

(d) *Penalties.* Readers who violate established conditions and/or procedures for using material are subject to penalties to be determined by or in consultation with the unit head responsible for the custody of the material used.

(1) When a reader violates a condition and/or procedure for using material, the division chief or head of the unit where the infraction occurred may, upon written notification, deny further access to the material, or to the unit in which it is housed, to be determined by

the nature of the infraction and the material involved.

(2) Within five workdays of receipt of such notification, the reader may make a written request, including the reasons for such request to the Associate Librarian for that service unit, or his/her designee, for a reconsideration of said notification.

(3) The Associate Librarian for that service unit, or his/her designee, shall respond within five workdays of receipt of such request for reconsideration and may rescind, modify, or reaffirm said notification, as appropriate.

(4) Repeated violations of established conditions and/or procedures for using material may result in denial of further access to the premises and further use of the Library's facilities or revocation of the reader's User Card, in accordance with established access regulations.

(5) Mutilation or theft of Library property also may result in criminal prosecution, as set forth in 18 U.S.C. 641, 1361, and 2071; and 22 D.C. Code 3106.

(6) In certain emergency situations requiring prompt action, the division chief or head of the unit where the infraction occurred immediately may deny further access to the material or unit prior to making written notification action. In such cases, the reader shall be notified, in writing, within three days of the action taken and the reasons therefor. The reader then may request reconsideration.

(7) A copy of any written notification delivered pursuant to this part shall be forwarded to the Captain, Library Police, the service unit, and the Director, Integrated Support Services, for retention.

[35 FR 10588, June 30, 1970. Redesignated at 38 FR 27049, Sept. 28, 1973, and amended at 51 FR 22073, June 18, 1986; 60 FR 34853, July 5, 1995]

§ 701.7 Reference and bibliographic assistance.

(a) Reference and bibliographic services provided in response to requests from readers and requests received by telephone and by mail are governed by policies and regulations established by the Librarian of Congress.

(b) Readers requiring reference and bibliographic assistance in the general collections and aid in the use of the catalogs may request help from the staff on duty in the general reading rooms. Requests for such assistance in special collections are referred to the appropriate specialized division and reading rooms.

(c) Reference inquiries and requests for service which cannot be satisfied by other libraries or scholarly institutions nearer the inquirer may be submitted to the Library of Congress, which will respond to them insofar and on such conditions as available staff and facilities permit.

[35 FR 10588, June 30, 1970. Redesignated at 38 FR 27049, Sept. 28, 1973, and amended at 46 FR 48661, Oct. 2, 1981]

§ 701.8 Special study facilities.

Special study facilities and reserved shelves are available for assignment to persons engaged in research. Applications for such assignments are acted upon by the Chief of the General Reading Rooms Division or by other authorized officials, and assignments on approved applications are made on specified conditions of registration, tenure, and use.

[35 FR 10588, June 30, 1970. Redesignated at 38 FR 27049, Sept. 28, 1973, and amended at 46 FR 48661, Oct. 2, 1981]

§ 701.9 Loans of library materials.

The Library of Congress is not a public circulating library and no material in its collections may be taken from the Library buildings except upon approval by the Chief of the Loan Division. Members of Congress, heads of executive departments, and other statutory borrowers, however, have the privilege of withdrawing books by virtue of their office. Subject to regulations and conditions established by The Librarian of Congress, special permission to withdraw materials may be given to congressional staff. Applications for such privilege are acted upon by the Chief of the Loan Division, who is responsible for the interpretation and enforcement of the regulations governing loans. Except for Members of Congress, heads of executive departments, and others authorized by the Librarian to have materials assembled and delivered to them, persons having the borrowing privilege must present

materials to be borrowed to the Loan Division for recording and for issuance of a door pass. Borrowers must present the materials for inspection to the guards on duty at the exits to the Library buildings. Materials are issued on interlibrary loan to other libraries within and outside the District of Columbia under regulations established by the Librarian of Congress. Applications from established libraries for such loans, and requests for information about interlibrary loans and loan service, generally, should be directed to the Chief of the Loan Division.

[35 FR 10588, June 30, 1970. Redesignated at 38 FR 27049, Sept. 28, 1973, and amended at 46 FR 48661, Oct. 2, 1981; 51 FR 22073, June 18, 1986]

§ 701.10 Loans of library materials for blind and other physically handicapped persons.

(a) *Program.* In connection with the Library's program of service under the Act of March 3, 1931 (46 Stat. 1487), as amended, its National Library Service for the Blind and Physically Handicapped provides books in raised characters (braille), on sound reproduction recordings, or in any other form, under regulations established by the Librarian of Congress. The National Library Service also provides and maintains reproducers for such sound reproduction recordings for the use of blind and other physically handicapped residents of the United States, including the several States, Territories, Insular Possessions, and the District of Columbia, and American citizens temporarily domiciled abroad.

(b) *Eligibility criteria.* (1) The following persons are eligible for such service:

(i) Blind persons whose visual acuity, as determined by competent authority, is 20/200 or less in the better eye with correcting glasses, or whose widest diameter if visual field subtends an angular distance no greater than 20 degrees.

(ii) Persons whose visual disability, with correction and regardless of optical measurement, is certified by competent authority as preventing the reading of standard printed material.

(iii) Persons certified by competent authority as unable to read or unable to use standard printed material as a result of physical limitations.

(iv) Persons certified by competent authority as having a reading disability resulting from organic dysfunction and of sufficient severity to prevent their reading printed material in a normal manner.

(2) In connection with eligibility for loan services ''competent authority'' is defined as follows:

(i) In cases of blindness, visual disability, or physical limitations ''competent authority'' is defined to include doctors of medicine, doctors of osteopathy, ophthalmologists, optometrists, registered nurses, therapists, professional staff of hospitals, institutions, and public or welfare agencies (e.g., social workers, case workers, counselors, rehabilitation teachers, and superintendents). In the absence of any of these, certification may be made by professional librarians or by any persons whose competence under specific circumstances is acceptable to the Library of Congress.

(ii) In the case of reading disability from organic dysfunction, competent authority is defined as doctors of medicine who may consult with colleagues in associated disciplines.

(c) *Loans through regional libraries.* Sound reproducers are lent to individuals and appropriate centers through agencies, libraries, and other organizations designated by the Librarian of Congress to service specific geographic areas, to certify eligibility of prospective readers, and to arrange for maintenance and repair of reproducers. Libraries designated by the Librarian of Congress serve as local or regional centers for the direct loan of such books, reproducers, or other specialized material to eligible readers in specific geographic areas. They share in the certification of prospective readers, and utilize all available channels of communication to acquaint the public within their jurisdiction with all aspects of the program.

(d) *National collections.* The Librarian of Congress, through the National Library Service for the Blind and Physically Handicapped, defines regions and determines the need for new regional libraries in cooperation with other libraries or agencies whose activities are

primarily concerned with the blind and physically handicapped. It serves as the center from which books, recordings, sound reproducers, and other specialized materials are lent to eligible blind and physically handicapped readers who may be temporarily domiciled outside the jurisdictions enumerated by the Act. It maintains a special collection of books in raised characters and on sound reproduction recordings not housed in regional libraries and makes these materials available to eligible borrowers on interlibrary loan.

(e) *Institutions.* The reading materials and sound reproducers for the use of blind and physically handicapped persons may be loaned to individuals who qualify, to institutions such as nursing homes and hospitals, and to schools for the blind or physically handicapped for the use of such persons only. The reading materials and sound reproducers may also be used in public or private schools where handicapped students are enrolled; however, the students in public or private schools must be certified as eligible on an individual basis and must be the direct and only recipients of the materials and equipment.

(f) *Musical scores.* The National Library Service also maintains a library of musical scores, instructional texts, and other specialized materials for the use of the blind and other physically handicapped residents of the United States and its possessions in furthering their educational, vocational, and cultural opportunities in the field of music. Such scores, texts, and materials are made available on a loan basis under regulations developed by the Librarian of Congress in consultation with persons, organizations, and agencies engaged in work for the blind and for other physically handicapped persons.

(g) *Veterans.* In the lending of such books, recordings, reproducers, musical scores, instructional texts, and other specialized materials, preference shall be at all times given to the needs of the blind and other physically handicapped persons who have been honorably discharged from the Armed Forces of the United States.

(h) Inquiries for information relative to the prescribed procedures and regulations governing such loans and requests for loans should be addressed to: Director, National Library Service for the Blind and Physically Handicapped, Library of Congress, Washington, DC 20542.

[39 FR 20203, June 7, 1974, as amended at 46 FR 48661, Oct. 2, 1981]

§ 701.11 Lending of materials from the Library for exhibition.

Subject to special conditions and procedures determined by the Library, certain materials in the Library's collections are available for loan to recognized institutions, such as libraries and museums, with established exhibition programs and with staffs proficient in handling the particular material requested. This service is subject to limitations in terms of the character of the materials and the availability of staff to prepare materials for shipment. Each request for loan is judged on its particular merits, i.e., type of institution and program for which loan is proposed in relation to the importance and value, both monetary and intrinsic, of the material requested and the probability of its being replaceable in the event of loss. Communications concerning the lending of materials for exhibition should be addressed to the Exhibits Officer, Library of Congress, Washington, DC 20540.

[35 FR 10588, June 30, 1970. Redesignated at 38 FR 27049, Sept. 28, 1973]

§ 701.12 Photoduplication service.

Photocopies of materials in the Library's general and special collections may be obtained from the Library's Photoduplication Service at prevailing rates and subject to prescribed contract provisions, provided that they are not subject to copyright or other restrictions, or provided that permission to copy has been obtained. Order forms for photocopies may be secured from the Photoduplication Service, Library of Congress, Washington, DC 20540.

[35 FR 10588, June 30, 1970. Redesignated at 38 FR 27049, Sept. 28, 1973]

§ 701.13 Service of African and Middle Eastern materials.

(a) Services to readers in the African and Middle Eastern Division are provided in accordance with prescribed

conditions of use of materials in the custody of the division: materials written or printed in Arabic, Hebrew, Persian, Turkish, Yiddish, etc.

(b) Readers requiring reference and bibliographic assistance in the general areas of African and Middle Eastern studies are assisted in the African and Middle Eastern Division's three component sections: African, Hebraic, and Near East, each of which maintains a reference collection and pertinent bibliographic tools. Reference service on special materials of interest to African and Middle Eastern studies (except law) is provided by the divisions holding such materials, as identified in § 701.5. In the fields of science and technology, reference and bibliographic services are provided by the Science and Technology Division.

[51 FR 22073, June 18, 1986]

§ 701.14 Service of Asian materials.

(a) Services to readers in the Asian Division are provided in accordance with prescribed conditions of use of materials in the custody of the division: materials written or printed in Bengali, Burmese, Chinese, Hindi, Indonesian, Japanese, Korean, Thai, Urdu, Vietnamese, etc.

(b) Readers requiring reference and bibliographic assistance in the general areas of Asian studies are assisted in the Asian Division's three component sections. Reference service on special materials of interest to Asian studies (except law) is provided by the divisions holding such materials, as identified in § 701.5. In the fields of science and technology, reference and bibliographic services are provided by the Science and Technology Division.

[51 FR 22073, June 18, 1986]

§ 701.15 Service of European materials.

(a) Services to readers in the European Division are provided in accordance with prescribed conditions of use of the materials in the custody of the European Division: Unbound serials and newspapers, (with the exception of those assigned to the Law Library), written or printed in any of the Slavic languages and in Estonian, Latvian, and Lithuanian. Readers requesting reference and bibliographic assistance on European materials classified in the general collections are assisted by staff on duty in the general reading rooms, or in the European Reading Room, which maintains a reference collection and pertinent informational files.

(b) The professional staff of the European Division renders reference and bibliographic services pertaining to the cultural, political, social, and economic life of Albania, Austria, Belgium, Bulgaria, Cyprus, Czechosloviakia, Denmark, Estonia, Finland, France, the German Democratic Republic, the Federal Republic of Germany, Greece, Hungary, Iceland, Italy, Latvia, Liechtenstein, Lithuania, Luxembourg, Monaco, The Netherlands, Norway, Poland, Romania, San Marino, the Soviet Union, Sweden, Switzerland, the Vatican City, and Yugoslavia. Reference service on special materials of interest to European studies (except law) is provided by the divisions holding such materials, as identified in § 701.5. In the fields of science and technology, reference and bibliographic services are provided by the Science and Technology Division.

[51 FR 22073, June 18, 1986]

§ 701.16 Service of folklife materials.

(a) The American Folklife Center renders specialized reference, bibliographic and consulting services pertaining to ''preserving and presenting'' folk cultural traditions in the United States. The Center is not a grant-giving agency but concentrates on varied services to the field—coordination of folk cultural activities, local, state, Federal and at the Library of Congress; field projects, technical and consultant services; research and archival service; and publications, exhibits and live presentations designed to disseminate ideas and materials pertaining to American folk culture.

(b) The Center's Archive of Folk Song provides reference and referral services concerning folklife and ethnomusicology by telephone, through correspondence, and directly to readers in the Archive's Reading

Room on the Library's pertinent collection of books, periodicals, recordings, manuscripts, etc. Printed descriptions of the Archive's published reference and findings aids, recordings, intern program, and other services, are available from the Archive of Folk Culture, Library of Congress, Washington, DC 20540.

[46 FR 48663, Oct. 2, 1981, as amended at 51 FR 22073, June 18, 1986]

§ 701.17 Service of Hispanic materials.

(a) Readers requesting reference and bibliographic assistance on hispanic materials classified in the general collections may consult staff on duty in the general reading rooms, or in the Hispanic Reading Room, which maintains a reference collection and pertinent informational files.

(b) The professional staff of the Hispanic Division renders reference and bibliographic services pertaining to the cultural, political, social and economic life of Spain, Portugal, and the countries of Latin America and the Caribbean, as well as for materials pertaining to the social and cultural life of Hispanics in the United States. Reference service on special materials of interest to Hispanic studies (except law) is provided by the divisions holding such materials, as identified in § 701.5. In the fields of science and technology, reference and bibliographic services are provided by the Science and Technology Division.

[51 FR 22074, June 18, 1986]

§ 701.18 Service of legal materials.

(a) Legal materials are served in the reading room of the Law Library in the James Madison Building. Those volumes which are not on the open shelves may be obtained for reading room use by filling out and presenting to a reference assistant a slip provided for the purpose.

(b) The collections of the Law Library are available in part, for use outside the Library for a limited period, to authorized borrowers in Washington, DC, and through interlibrary loan to the general public residing in other parts of the country, in conformity with Loan Division procedures. Books which are lent for use outside of the Law Library must be charged in the Law Library. Books which are lent for use outside the Library building must be charged in the Loan Division, where a formal charge is made and a door pass is issued.

[46 FR 48662, Oct. 2, 1981]

§ 701.19 Service of local history and genealogical materials.

Readers requesting reference and bibliographic assistance on materials in local history and genealogy may consult the staff in the Local History and Genealogy Room.

[46 FR 48662, Oct. 2, 1981]

§ 701.20 Service of manuscript materials.

(a) Services to readers in the Manuscript Reading Room are provided in accordance with prescribed conditions of reader registration and use of the materials in the custody of the Manuscript Division. The use of such materials is restricted to the Manuscript Reading Room.

(b) The professional staff of the Manuscript Division renders reference and bibliographic services pertaining to its collections by telephone, through correspondence, and directly to adult readers in the Manuscript Reading Room.

[51 FR 22074, June 18, 1986]

§ 701.21 Service of maps and cartographic materials.

(a) Services to readers in the Geography and Map Reading Room are provided in accordance with prescribed conditions of reader registration and use of the maps, atlases and globes in the custody of the Geography and Map Division. The use of such materials is restricted to the Geography and Map Reading Room.

(b) The professional staff of the Geography and Map Division renders reference and bibliographic services pertaining to its collections by telephone, through correspondence, and directly to adult readers in the Geography and Map Reading Room.

[51 FR 22074, June 18, 1986]

§ 701.22 Service of microfilmed materials.

(a) Service to readers in the Microform Reading Room is provided in accordance with prescribed conditions governing the use of microfilm and microprint material in the custody of the Microform Reading Room. Investigators may requisition inkprint materials from other collections of the Library for use in the Microform Reading Room, but such requests will be subject to limitations consistent with the care and service of the collections, and with regard for service to readers in other reading rooms.

(b) Other units have custody of microfilmed materials, such as manuscripts, newspapers, music, law, and orientalia, and render service on these materials.

[46 FR 48662, Oct. 2, 1981]

§ 701.23 Service of motion picture and television materials.

(a) Services to readers in the Motion Picture and Television Reading Room are provided in accordance with prescribed conditions of reader registration and use of the motion picture film, and videotape materials in the custody of the Motion Picture, Broadcasting and Recorded Sound Division. The use of such materials is restricted to the Motion Picture and Television Reading Room.

(b) The professional staff of the Motion Picture, Broadcasting and Recorded Sound Division renders reference and filmographic services pertaining to its collections by telephone, through correspondence and directly to adult readers in the Motion Picture and Television Reading Room.

[51 FR 22074, June 18, 1986]

§ 701.24 Service of music materials.

(a) Services to readers in the Performing Arts Reading Room are provided in accordance with prescribed conditions of reader registration and use of the music materials in the custody of the Music Division. The use of such materials is restricted to the Performing Arts Reading Room.

(b) The professional staff of the Music Division renders reference and bibliographic services pertaining to its collections, by telephone, through correspondence and directly to adult readers in Performing Arts Reading Room (see also § 701.29).

[51 FR 22074, June 18, 1986]

§ 701.25 Service of prints and photographs.

(a) Services to readers in the Prints and Photographs Reading Room are provided in accordance with prescribed conditions of reader registration and use of the collections of fine and historical prints, drawings, photographs, posters, and architectural drawings and photographs, in the custody of the Prints and Photographs Division. The use of such materials is restricted to the Prints and Photographs Reading Room.

(b) The professional staff of the Prints and Photographs Division renders reference and bibliographic services pertaining to its collections, by telephone, through correspondence and directly to adult readers in the Prints and Photographs Reading Room.

[51 FR 22074, June 18, 1986]

§ 701.26 Service of rare books and special collections.

(a) Services to readers in the Rare Book and Special Collections Reading Room are provided in accordance with prescribed conditions of reader registration and use of the materials in the custody of the Rare Book and Special Collections Division. The use of such materials is restricted to the Rare Book and Special Collections Reading Room.

(b) The professional staff of the Rare Book and Special Collections Division renders reference and bibliographic services pertaining to its collections by telephone, through correspondence, and directly to adult readers in the Rare Book and Special Collections Reading Room.

(c) Service to readers of the rare books in the custody of the Law Library and the Music Division are subject to similar regulations.

[51 FR 22074, June 18, 1986]

§ 701.27 Service of scientific and technical materials.

(a) Readers requesting reference and bibliographic assistance in science and technology may consult the staff on duty in the Science Reading Room. Inquiries are referred when necessary to subject specialists in the Science and Technology Division. A special collection of technical reports is available in the Science Reading Room. Materials on science in the Library's subject-classified collections are also served in the Library's other general reading rooms.

(b) In answering requests for referral service, the Resources Analysis Section of the General Reading Rooms Division compiles names, addresses, telephone numbers, and brief descriptions of appropriate information resources, which may include professional societies, university research bureaus and institutes, Federal and State agencies, industrial laboratories, museums, testing stations, and individual experts as well as more traditional sources of information, such as technical libraries, information and document centers, and abstracting and indexing services.

[51 FR 22074, June 18, 1986]

§ 701.28 Service of serial materials.

(a) Services to readers in the Newspaper and Current Periodical Reading Room are provided in accordance with prescribed conditions of use of the collections of current and unbound periodicals, bound, unbound and microfilmed newspapers, Government documents, ephemera, etc. not assigned to other divisions, in the custody of the Serial and Government Publications Division. The use of such materials is restricted to the Newspaper and Current Periodical Reading Room.

(b) The professional staff of the Serial and Government Publications Division renders reference and bibliographic services pertaining to its collections as well as to the government publications in the general classified collections, by telephone, through correspondence and directly to adult readers in the Newspaper and Current Periodical Reading Room.

[51 FR 22074, June 18, 1986]

§ 701.29 Service of sound recordings.

(a) Services to readers in the Recorded Sound Reference Center in the Performing Arts Reading Room are provided in accordance with prescribed conditions of reader registration and use of the sound recordings of all kinds (except recordings for the blind) in the custody of the Motion Picture, Broadcasting and Recorded Sound Division. The use of such materials, for serious research only, is restricted to the Performing Arts Reading Room and appointments to use them must be sought in advance by application to the Motion Picture, Broadcasting and Recorded Sound Division.

(b) The professional staff of the Recorded Sound Reference Center renders reference and discographic services pertaining to the collections, by telephone, through correspondence, and directly to adult readers in the Performing Arts Reading Room.

(c) Reference and information pertaining to folk music and ethnomusicology are available from the Archive of Folk Culture, American Folklife Center.

(d) A list of recordings of poetry and folk music issued by the Library of Congress and available for a sale may be obtained from the Public Services Coordinator, Motion Picture, Broadcasting and Recorded Sound Division, Library of Congress, Washington, DC 20540.

[51 FR 22075, June 18, 1986]

§ 701.30 Cataloging distribution.

Bibliographic products and services are produced and supplied to the Library of Congress and other libraries by the Cataloging Distribution Service. The Service sells bibliographic data in the form of printed cards, machine-readable tapes (MARC), book catalogs, microfiche catalogs and technical publications to libraries, learned societies, professional institutions, government agencies, private institutions, and cooperative and commercial processing centers. Information may be obtained from the Cataloging Distribution Service, Library of Congress.

[51 FR 22075, June 18, 1986]

§ 701.31 Library of Congress publications.

Publications of the Library include guides to its collections and services, catalogs of materials in the Library of Congress and other libraries, lists and descriptions of serials and monographs received, registers of personal papers of American public figures, bibliographies, facsimiles of rare items in its collections, exhibit catalogs, annual reports, acquisitions reports, and various other issuances relating to the Library and its programs. Most of the Library's publications are sold by the Superintendent of Documents, Government Printing Office, Washington, DC 20402. A complete list of available publications, *Library of Congress Publications in Print,* is distributed free by the Central Services Division, Library of Congress, Washington, DC 20540.

[46 FR 48663, Oct. 2, 1981, as amended at 51 FR 22075, June 18, 1986]

§ 701.32 Offers of materials for purchase.

The Library solicits offers of library materials (including books, periodicals, pamphlets, manuscripts, maps, views, music, recordings, motion pictures, photographs, posters, prints, etc.). Lists or catalogs offering materials should specify author, title, place of publication, date of publication, whether or not copyrighted, edition note, series note, and number of pages or volumes. Each item must be priced. All offers of materials and all other correspondence concerning the acquisition by purchase of materials for the Library's collections (including invoices, statements, and questions concerning payment for material purchased by the Library) should be addressed to the Library of Congress, Order Division, Washington, DC 20504. Materials should be sent ''on approval'' unless specifically requested by the Order Division.

[51 FR 22075, June 18, 1986; 51 FR 23537, June 30, 1986]

§ 701.33 Acquisition of library materials by non-purchase means and disposition of surplus library materials.

(a) *Acquisition of non-purchase materials.* The Exchange and Gift Division has responsibility for the Library's acquisition of materials by non-purchase means, including exchange, gift and transfer, and other government sources.

(1) *Exchanges.* Official exchanges, numbering about one hundred agreements, are maintained between the Library and official agencies or institutions designated in other countries to send and receive official documents. Agreements for official exchanges stem from multilateral treaties, Executive Agreements, and informal agreements. Sets of U.S. official publications are supplied under these agreements. In addition to official exchanges, general (or non-official) exchanges negotiated on an informal basis are conducted with government agencies at all levels, universities, colleges, museums, libraries, learned organizations and international organizations. (Currently about 15,000 non-official exchanges are in effect throughout the world). The Library sends to these exchange partners selections from its duplicates or current U.S. Government publications. By law (44 U.S.C. 1718 and 1719) the Library is authorized to requisition for use on international exchange up to 125 copies of each U.S. Government publication issued by the Government Printing Office.

(2) *Gift.* The Library solicits gifts from individuals, businesses, foundations, and other organizations throughout the world, including unions, political parties, chambers of commerce, religious groups, etc., that do not enter into exchanges or offer their publications for regular sale. The Library also actively solicits material for its special collections which it would not usually be in a position to purchase, including personal papers, music manuscripts, sound recordings, rare books, fine prints and photographs, etc.

(3) *Government source.* In addition to the documents provided by the Superintendent of Documents for international exchange, the Library is entitled under 44 U.S.C. 1718 to requisition up to 25 copies of each publication issued by the Government Printing Office for use in its own collections. Other laws provide the Library with books for the blind and with publications deposited for copyright. Under a variety of arrangements the Exchange and Gift Division also acquires the official publications of the states, territories, and possessions of the United States for listing in its accessions list, the *Monthly Checklist of State Publications,* and for inclusion in its collections.

(4) *Transfer.* Libraries and other agencies of the Federal Government are encouraged to send to the Library for disposition soft or hard-bound books that are surplus to their needs in the following categories: (1) Novels and (2) Reference works (e.g. encyclopedias, directories, guides, such as Encyclopedia of Associations, The World of Learning, The Stateman's Yearbook, Books in Print, etc.) not older than three years. And not older than five years in: (1) Humanities (art, music, belles letters etc.); (2) History and area studies; (3) Social sciences (economics, politics, etc.); (4) Education; and (5) Science (agriculture, medicine, computer science, mathematics, physics, etc.). Such transferred materials are needed to fill gaps in the Library's holdings, for exchanges, to transfer to other Federal agencies, and to make available through the Surplus Books Program to qualified recipients. The Library's Exchange and Gift Division (E&G) requests notification at the earliest possible date of any government libraries that are scheduled to close or be substantially reduced. The Library also requests that shipments of 1,000 pounds or more be cleared with E&G in advance. The Library does not accept bound and unbound serials. Federal agencies should dispose of surplus serials, and other surplus library materials not specified above, in accordance with their agency's regulations governing the disposal of surplus materials.

(b) *Disposition of surplus books.* The Exchange and Gift Division has available at all times surplus books not needed by the Library for its own uses. These materials are made available for selection on exchange by eligible institutions, organizations, book dealers, and collections, and by donation to educational institutions (tax-supported or non-profit schools, school systems, colleges, universities, museums, and public libraries), non-profit tax-exempt organizations (section 501 of IRS Code) and public bodies (agencies of local, state, or national governments) in the United States. A public library is defined as ''a library that serves free all residents of a community, district, state, or region, and receives its financial support in whole or in part from public funds.''

(c) Inquiries concerning the programs relating to the acquisition of materials for the collections of the Library by non-purchase methods and the disposition of surplus materials should be addressed to: Chief, Exchange and Gift Division, Library of Congress, Washington, DC 20540.

[46 FR 35088, July 7, 1981. Redesignated at 46 FR 48663, Oct. 2, 1981, and amended at 51 FR 22075, June 18, 1986; 61 FR 49262, Sept. 19, 1996]

§ 701.34 Contracting officers.

Incumbents of the following positions are authorized to contract for materials and services on behalf of the Library of Congress and to execute contracts in the areas as specified below. The Librarian of Congress may further delegate contracting authority in specific situations.

Library officers	Area of contracting authority
The Librarian of Congress.	All areas.
The Deputy Librarian of Congress.	All areas.
The Associate Librarian of Congress.	All areas.
Associate Librarian for Management.	All areas except materials for the Library's collections.
Director, Congressional Research Service (CRS).	Agreements to procure experts or consultants (including stenographic reporters) pursuant to 2 U.S.C. 166(h)(2).
Assistant Librarian for Research Services.	Performance fees for readings, lectures, dramatic fees, and the Council of Scholars.
Director, Library Environment Resources Office.	Rental/space agreements with Government agencies.

Library officers	Area of contracting authority
Director, Acquisitions and Overseas Operations, Processing Services.	Agreements for bibliographic services.
Director, National Library for the Blind and Physically Handicapped.	Collection materials for the Library's blind and physically handicapped program.
Director of Publishing.	Agreements directly related to publications of the Publishing Office.
Chief, Procurement and Supply Division.	All areas except materials for the Library's collections.
Chief and Assistant Chief, Order Division.	Purchased materials for the Library's collections.
Chief and Assistant Chief, Exchange and Gift Division.	Agreements involving all non-purchase materials for the Library's collections (exchanges, gifts, deposits, and so forth).
Chief, Financial Management Office, and Budget Officer.	Interagency agreements, entertainment, performance of services by the Library and interdepartmental charges.
Chief, Manuscript Division.	Agreements involving the Library's literature programs (nonappropriated funds).
Chief, Music Division.	Agreements involving the Library's music programs (nonappropriated funds).
Exhibits Officer	Agreements involving loans of exhibits.
Staff Training and Development Officer.	Training agreements with educational institutions.

[52 FR 34383, Sept. 11, 1987]

§ 701.35 Credit and recognition policy on the use of the library name, seal, or logo.

(a) *Purpose.*

The purpose of this section is to assure that the Library of Congress is properly and appropriately identified and credited as a source of materials in publications that rely on Library resources, so that the public may know that the resources in its national library are being used productively in fulfillment of its mission.

(b) *Definitions.*

(1) *Publication* means any tangible expression of words or thoughts in any form or format, including print, sound recording, television, optical disc, software, online delivery, or other technology now known or hereinafter created. It includes the whole range of tangible products from simple signs, posters, pamphlets, and brochures to books, television productions, and movies.

(2) *Internal Library publication* means a publication over which any unit of the Library has complete or substantial control or responsibility.

(3) *Collaborative publications* means those in which any unit of the Library is providing more than routine assistance. The assistance may be pursuant to a formal agreement or may simply be an extensive courtesy.

(4) *Commercial publications* means those known or likely to involve subsequent mass distribution, whether by a for-profit or not-for-profit organization or individual.

(5) *Noncommercial user* means an individual whose publication includes a significant number of Library references, but the intended purpose of which is personal, scholarly, or noncommercial.

(6) *Official Library logo* means any official seal of the Library.

(c) *Credit and recognition policy.*

(1) The name ''Library of Congress,'' or any abbreviation thereof, is used officially to represent the Library of Congress and its programs, projects, functions, activities, or elements thereof. In addition, the Library recognizes that its name may be used informationally by others in publications. Except as provided for in this part, however, the use of the Library's name, explicitly or implicitly to endorse materials in any publication, is prohibited.

(2) The Library of Congress seal symbolizes the Library's authority and standing as an official agency of the U.S. Government. As such, it shall be displayed only on official documents or publications of the Library. The seal of the Library of Congress Trust Fund Board shall be affixed to documents of that body as prescribed by the Librarian of Congress. Procedures governing the use of any other Library of Congress logo are set out in paragraphs (c)(3) through (c)(10) of this section.

(3) Questions regarding the appropriateness of the recognition or credit shall be referred to the Public Affairs Office.

(4) *Internal Publications.* Each internal Library publication shall include a copy of an official Library logo in a position, format, and location suitable to the particular media involved. The logo may be alone or in addition to an approved unit or activity logo, but

shall be no less prominent than any other logo used, except in the cases of the Copyright Office, the Congressional Research Service, and the Center for the Book. Other exceptions to this policy may be made only if a written request is approved by the Management Team member under whose jurisdiction the publication falls.

(5) *Collaborative/Commercial Publications*

(i) Individuals with whom the Library is engaged in a collaborative publication, and individuals requesting assistance for commercial publications, shall be instructed regarding Library policy on credit, recognition, and endorsement by the Library employee with whom they are dealing.

(ii) Ordinarily, the Library logo accompanied by a concise acknowledgement should appear in an appropriate and suitable location on all collaborative and all commercial publications. The Library requires that a credit line accompany reproductions of images from its collections.

(iii) The size, location, and other attributes of the logo and credit line should be positioned in such a way that they do not imply Library endorsement of the publication unless such endorsement is expressly intended by the Library, as would be the case in co-publication or coproduction activities. Use of the Library name or logo in any context suggesting an explicit or implicit endorsement may be approved in only those instances where the Library has sufficient expertise to pass judgment on the subject matter, where that expertise has been engaged or applied, and where the terms of the collaborative undertaking are such that the Library has sufficient control over the publication to make changes necessary to reflect Library expertise.

(iv) Library officers working on commercial publication projects shall notify all collaborators of Library policy in writing if the collaboration is arranged through an exchange of correspondence. A statement of Library policy shall be incorporated into the agreement if the terms of the collaboration are embodied in any written instrument, such as a contract or letter of understanding.

(6) *Noncommercial Users.* Staff members assisting individuals who are noncommercial users of Library resources shall encourage them to extend the customary professional courtesy of acknowledging their sources in publications, including films, television, and radio, and to use approved credit lines.

(7) Each product acquired for resale by the Library that involves new labeling or packaging shall bear a Library logo and shall contain information describing the relevance of the item to the Library or its collections. Items not involving new packaging shall be accompanied by a printed description of the Library and its mission, with Library logo, as well as the rationale for operating a gift shop program in a statement such as, ''Proceeds from gift shop sales are used to support the Library collections and to further the Library's educational mission.''

(8) Each item authorized by the Library pursuant to a licensing agreement (directly or through a third party) shall bear a Library logo and shall contain information describing the relevance of the item to the Library or its collections.

(9) Office Systems Services shall make available copies of the Library seal or logo in a variety of sizes and formats, including digital versions.

(10) Each service unit head shall be responsible for devising the most appropriate way to carry out and enforce this policy.

(d) *Violations.*

(1) All violations or suspected violations of this section or of 18 U.S.C. 1017 shall be reported to the Office of the General Counsel as soon as they become known.

(2) Whenever the General Counsel has determined that any person or organization is engaged in or about to engage in an act or practice that constitutes or will constitute conduct prohibited by this part or a violation of any requirements of this section, the General Counsel shall take whatever action necessary, including seeking the assistance of the U.S. Department of Justice, to obtain injunctive relief or damages.

[59 FR 55812, Nov. 9, 1994]

§ 701.36 Use of the Seal of the Library of Congress and the Library of Congress Trust Fund Board.

(a) The Seal is the official emblem of the Library of Congress and its use is therefore permitted only on official documents or publications of the Library.

(b) The Seal may be used on Library publications, leaflets, brochures, letterhead, or other printed matter prepared as official documents of the Library.

(c) The embossed Seal shall be used primarily to authenticate contracts, agreements, certifications, and other documents signed by The Librarian, or his/her designated representative(s).

(d) With the approval of The Associate Librarian of Congress, the Seal may be used in cooperative programs in which the Library officially engages with other organization(s).

(e) Any other use shall be approved in advance by The Associate Librarian of Congress.

(f) The official Seal of the Library of Congress Trust Fund Board shall be affixed to documents of that body as prescribed by The Librarian of Congress.

(g) Any person or organization that uses the Library Seal or the Seal of the Library of Congress Trust Fund Board in a manner other than as authorized by the provisions of this section shall be subject to the criminal provisions of 18 U.S.C. 1017.

[49 FR 8607, Mar. 8, 1984]

PART 702—CONDUCT ON LIBRARY PREMISES

Sec.

702.1 Applicability.
702.2 Access to Library buildings and collections.
702.3 Conduct on Library premises.
702.4 Demonstrations.
702.5 Photographs.
702.6 Gambling.
702.7 Alcoholic beverages and controlled substances.
702.8 Weapons and explosives.
702.9 Use and carrying of food and beverages in Library buildings.
702.10 Inspection of property.
702.11 Protection of property.
702.12 Smoking In Library buildings.
702.13 Space for meetings and special events.
702.14 Soliciting, vending, debt collection, and distribution of handbills.
702.15 Penalties.

AUTHORITY: Sec. 1, 29 Stat. 544, 546; 2 U.S.C. 136.

§ 702.1 Applicability.

The rules and regulations in this part apply to all Federal property under the charge and control of the Librarian of Congress and to all persons entering in or on such property.

[35 FR 19019, Dec. 16, 1970. Redesignated at 38 FR 27049, Sept. 28, 1973]

§ 702.2 Access to Library buildings and collections.

Admittance and movement of visitors in Library buildings will be restricted to the areas providing facilities and services to the public during announced hours of public opening. Persons having legitimate business in areas closed to the public may be admitted after identification by responsible officials in the building or by authority as evidenced by a building access pass issued by the Associate Librarian for Management.

[35 FR 19019, Dec. 16, 1970. Redesignated at 38 FR 27049, Sept. 28, 1973, and amended at 46 FR 48663, Oct. 2, 1981]

§ 702.3 Conduct on Library premises.

(a) All persons using the premises shall conduct themselves in such manner as not to affect detrimentally the peace, tranquility, and good order of the Library. Such persons shall:

(1) Use areas that are open to them only at the times those areas are open to them and only for the purposes for which those areas are intended;

(2) Comply with any lawful order of the police or of other authorized individuals; and

(3) Comply with official signs of a restrictive or directory nature.

(b) All persons using the premises shall refrain from:

(1) Creating any hazard to persons or property, such as by fighting or by throwing or deliberately dropping any breakable article, such as glass, pottery, or any sharp article, or stones or other missiles;

(2) Using Library facilities for living accommodation purposes, such as unauthorized bathing, sleeping, or storage of personal belongings, regardless of the specific intent of the individual;

(3) Engaging in inordinately loud or noisy activities;

(4) Disposing of rubbish other than in receptacles provided for that purpose;

(5) Throwing articles of any kind from or at a Library building or appurtenance;

(6) Committing any obscene or indecent act such as prurient prying, indecent exposure, and soliciting for illegal purposes;

(7) Removing, defacing, damaging, or in any other way so misusing a statue, seat, wall, fountain, or other architectural feature or any tree, shrub, plant, or turf;

(8) Stepping upon or climbing upon any statue, fountain, or other ornamental architectural feature or any tree, shrub, or plant;

(9) Bathing or swimming in any fountain;

(10) Painting, marking or writing on, or posting or otherwise affixing any handbill or sign upon any part of a Library building or appurtenance, except on bulletin boards installed for that purpose and with the appropriate authorization;

(11) Bringing any animal onto Library buildings and turf other than dogs trained to assist hearing or visually impaired persons;

(12) Threatening the physical well-being of an individual; and

(13) Unreasonably obstructing reading rooms, food service facilities, entrances, foyers, lobbies, corridors, offices, elevators, stairways, or parking lots in such manner as to impede or disrupt the performance of official duties by the Library staff or to prevent Library patrons from using or viewing the collections.

(c) Public reading rooms, research facilities, and catalog rooms are designated as nonpublic forums. As such, they shall be used only for quiet scholarly research or educational purposes requiring use of Library materials. All persons using these areas shall comply with the rules in effect in the various public reading rooms, shall avoid disturbing other readers, and shall refrain from, but not limited to,

(1) Eating, drinking, or smoking in areas where these activities are expressly prohibited;

(2) Using loud language or making disruptive noises;

(3) Using any musical instrument or device, loudspeaker, sound amplifier, or other similar machine or device for the production or reproduction of sound, except for devices to assist hearing or visually impaired persons, without authorization;

(4) Interfering by offensive personal hygiene with the use of the area by other persons;

(5) Spitting, defecating, urinating, or similar disruptive activities;

(6) Intentionally abusing the furniture or furnishings in the area;

(7) Intentionally damaging any item from the collections of the Library of Congress or any item of Library property;

(8) Using computing terminals for purposes other than searching or training persons to search the Library's data bases or those under contract to the Library, or misusing the terminals by intentional improper or obstructive searching; and

(9) Using the Library's photocopy machines for purposes other than copying Library materials whenever other persons are waiting in line.

[52 FR 672, Jan. 8, 1987]

§ 702.4 Demonstrations.

(a) Library buildings and grounds are designated as limited public forums, except for those areas designated as nonpublic forums. However, only Library grounds (defined in 2 U.S.C. 167j), not buildings, may be utilized for demonstrations, including assembling, marching, picketing, or rallying. In addition, as the need for the determination of other matters arises, The Librarian will determine what additional First Amendment activities may not be permitted in a limited public forum. In making such determination, The Librarian will consider only whether the intended activity is incompatible with the primary purpose and intended use of that area.

(b) The only areas of the Library grounds that are designated for use for demonstrations are the following:

(1) *Thomas Jefferson Building:* The Neptune Plaza and the interior sidewalks on the north and south sides of the building;

(2) *John Adams Building:* The plaza in front of the south entrance to the building; and

(3) *James Madison Building:* The portion of Independence Plaza between the pylons that demarcate the driveway and Independence Avenue, and the western and eastern ends of the plaza beyond the ramps for the handicapped.

(c) Persons seeking to use such designated areas for the purpose of demonstrations shall first secure written permission from the Associate Librarian for Management. An application for such permission shall be filed with the Library Support Services Office no later than three workdays before the time of the proposed demonstration. Permission to demonstrate shall be based upon—

(1) The availability of the requested location and

(2) The likelihood that the demonstration will not interfere with Library operations or exceed city noise limitations as defined by District of Columbia regulations (26 D.C. Reg. 229 and 24 D.C. Reg. 293).

(d) No person(s) having permission to demonstrate pursuant to this Regulation shall at any time block either the entrances to or exits from the Library buildings nor shall such person(s) harass, intimidate, or otherwise interfere with the use of the Library's facilities by persons not participating in the demonstration.

[52 FR 672, Jan. 8, 1987]

§ 702.5 Photographs.

Photographs for advertising or commercial purposes may be taken only with the permission of the Library's Information Officer. Cameras and other photographic equipment may be carried on the premises, but their use in certain areas may be restricted by rules or posted signs. Persons using still, motion picture, or video cameras with flash attachments or lights or with tripods or other stationary equipment shall obtain the prior permission of the Library's Information Officer.

[52 FR 672, Jan. 8, 1987]

§ 702.6 Gambling.

Participation in any illegal gambling, such as the operation of gambling devices, the conduct of an illegal pool or lottery, or the unauthorized sale or purchase of numbers or lottery tickets, on the premises is prohibited.

[52 FR 673, Jan. 8, 1987]

§ 702.7 Alcoholic beverages and controlled substances.

(a) The use of alcoholic beverages on the premises is prohibited except on official occasions for which advance written approval has been given by the Associate Librarian for Management and except for concessionaires to whom Library management has granted permission to sell alcoholic beverages on the premises.

(b) The illegal use or possession of controlled substances on the premises is prohibited.

[52 FR 673, Jan. 8, 1987]

§ 702.8 Weapons and explosives.

Except where duly authorized by law, and in the performance of law enforcement functions, no person shall carry firearms, other dangerous or deadly weapons, or explosives, either openly or concealed, while on the premises.

[52 FR 673, Jan. 8, 1987]

§ 702.9 Use and carrying of food and beverages in Library buildings.

Consumption of food and beverages in Library buildings is prohibited except at point of purchase or other authorized eating places. Under no circumstances may food or beverages be carried to the bookstacks or other areas where there exists significant risk to Library materials or property or where there may result a detraction from the dignity or efficiency of public service.

[35 FR 19019, Dec. 16, 1970. Redesignated at 38 FR 27049, Sept. 28, 1973 and 52 FR 672, Jan. 8, 1987]

§ 702.10 Inspection of property.

(a) Individuals entering Library buildings do so with the understanding that all property in their possession including, but not limited to, suitcases, briefcases, large envelopes, packages, and office equipment may be inspected.

(b) Upon entering the Library buildings privately owned office machines including but not limited to typewriters, computing machines, stenotype machines, and dictating machines, shall be registered at the guard's desk at the entrance to buildings for the purpose of controlling such equipment.

(c) In the discharge of official duties, Library officials are authorized to inspect Government-owned or furnished property assigned to readers and the general public for their use, such as cabinets, lockers, and desks. Unauthorized property or contraband found in the possession of members of the Library staff, readers, or the general public as a result of such inspections will be subject to confiscation by Library officials.

[35 FR 19019, Dec. 16, 1970. Redesignated at 38 FR 27049, Sept. 28, 1973 and 52 FR 672, Jan. 8, 1987]

§ 702.11 Protection of property.

(a) Any person who shall steal, wrongfully deface, injure, mutilate, tear, or destroy library materials, or any portion thereof, shall be punished by a fine of not more than $2,000 or imprisoned not more than 3 years, or both (18 U.S.C. 641; 18 U.S.C. 1361; 18 U.S.C. 2071; and 22 D.C. Code 3106).

(b) Any person who embezzles, steals, purloins, or, without authority, disposes of anything of value of the United States, or willfully injures or commits any depredation against any Government property shall be punished by a fine of not more than $10,000 or imprisoned not more than 10 years, or both; but if the value of such property does not exceed the sum of $100, he shall be fined not more than $1,000 or imprisoned not more than 1 year, or both. (18 U.S.C. 641 and 18 U.S.C. 1361.)

[35 FR 19019, Dec. 16, 1970. Redesignated at 38 FR 27049, Sept. 28, 1973, and amended at 46 FR 48664, Oct. 2, 1981; further redesignated at 52 FR 672, Jan. 8, 1987]

§ 702.12 Smoking in Library buildings.

Smoking in Library buildings is prohibited except in those areas specifically designated for this purpose.

[35 FR 19019, Dec. 16, 1970. Redesignated at 38 FR 27049, Sept. 28, 1973 and 52 FR 672, Jan. 8, 1987]

§ 702.13 Space for meetings and special events.

The use of ''meeting places'' in the Library shall be limited to official staff functions, or functions sponsored by the Library. The Library's facilities are not available for meetings, performances or special events that: (a) Involve any organization practicing or promoting discrimination based upon race, religion, color, sex, age, marital status, handicap, national origin, or political affiliation; (b) have a partisan political, sectarian, or similar nature or purpose; (c) are sponsored by profit-making organizations that promote commercial enterprises or commodities.

[46 FR 48664, Oct. 2, 1981. Redesignated at 52 FR 672, Jan. 8, 1987]

§ 702.14 Soliciting, vending, debt collection, and distribution of handbills.

(a) The soliciting of alms and contributions, commercial soliciting and vending of all kinds, the display or distribution of commercial advertising, the offering or exposing of any article for sale, or the collecting of private debts on the grounds or within the buildings of the Library is prohibted. This rule does not apply to national or local drive for funds for welfare, health, or other purposes sponsored or approved by The Librarian of Congress, nor does it apply to authorized concessions, vending devices in approved areas, or as specifically allowed by the Associate Librarian for Management.

(b) Distribution of material such as pamphlets, handbills, and flyers is prohibited without prior approval of the Associate Librarian for Management.

(c) Peddlers and solicitors will not be permitted to enter Library buildings unless they have a specific appointment, and they will not be permitted to canvass Library buildings.

[52 FR 673, Jan. 8, 1987]

§ 702.15 Penalties.

(a) Persons violating provisions of 2 U.S.C. 167a to 167e, inclusive, regulations promulgated pursuant to 2 U.S.C. 167f, this Regulation, or other applicable Federal laws relating to the Library's property, including its collections, are subject to removal from the premises, to arrest, and to any additional penalties prescribed by law. In instances of mutilation or theft of Library materials or other Library property, prosecution by appropriate authorities shall be in accordance with the provisions of the statutes cited in § 702.11.

(b) Upon written notification by the Associate Librarian for Management, disruptive persons may be denied further access to the premises and may be prohibited from further use of the Library's facilities.

(1) Within three workdays of receipt of such notification, an affected individual may make a written request, including the reasons for such a request, to the Associate Librarian for Management for a reconsideration of said notification.

(2) The Associate Librarian for Management shall respond within three workdays of receipt of such request for reconsideration and may, at his or her option, rescind, modify, or reaffirm said notification.

[52 FR 673, Jan. 8, 1987]

PART 703—AVAILABILITY OF LIBRARY OF CONGRESS RECORDS

Sec.
703.1 Policy.
703.2 Records covered.
703.3 Exemptions.
703.4 Procedures for inspection and copying of records.
703.5 Public reading facility.
703.6 Fees.

AUTHORITY: 2 U.S.C. 136.

SOURCE: 41 FR 2230, Jan. 15, 1976, unless otherwise noted.

§ 703.1 Policy.

Subject to limitations set forth in this part, Library of Congress records are available as hereinafter provided and shall be furnished as promptly as possible within the Library to any member of the public at appropriate places and times and at an appropriate fee, if any. Although this policy reflects the public information section of the Administrative Procedure Act (5 U.S.C. 552, *et seq.*) as amended, the application of that legislation to the Library of Congress is not to be inferred; nor should this document be considered as conferring on any member of the public a right under that Act of access to or information from the records of the Library.

§ 703.2 Records covered.

As used herein, Library of Congress ''records'' include all books, papers, maps, photographs or other documentary materials exclusive of materials in the collections of the Library of Congress, regardless of physical form or characteristics, made or received by the Library of Congress in pursuance of Federal law or in connection with the transaction of public business, and preserved, or appropriate for preservation, by the Library as evidence of the organization, functions, policies, decisions, procedures, operations, or other activities of the Government or because of the informational value of data contained therein. The term refers only to such items in being and in the possession or under the control of an office of the Library. It does not include records to be compiled or procured in the future, nor does the term include objects or articles, such as furniture, paintings, sculpture, three-dimension models, structures, vehicles, and equipment.

§ 703.3 Exemptions.

(a) The Library shall exempt from disclosure materials that are:

(1) Specifically authorized under criteria established by Executive order to be withheld from public disclosure in the interest of national defense or foreign policy and are in fact properly classified pursuant to Executive Order 11652;

(2) Related solely to the internal personnel rules and practices of the Library;

(3) Specifically exempted from disclosure by statute;

(4) Related to copyrights except as provided by 37 CFR 201.2, 203.4 and 203.5;

(5) Privileged or confidential, in that they contain trade secrets and commercial or financial information obtained from any person; this exemption pertains to information which would not customarily be made public by the person from whom it was obtained by the Government. It includes, but is not limited to, business sales statistics, inventories, customer lists, scientific or manufacturing processes or developments; information customarily subject to protection as privileged in a court or other proceeding, such as information protected by the doctor-patient, lawyer-client, or lender-borrower privilege; information submitted by any person to the Government in confidence or where the Government has obligated itself not to disclose information it received; formulate, designs, drawings, research data, and other records developed by or for the Government which are significant as items of valuable property;

(6) Contained in interagency or intragency communications, such as internal drafts, memoranda between officials or agencies, opinions and interpretations prepared by staff or consultants; records of the deliberations of staff or committees on internal matters; and records whose premature disclosure would interfere with the achievement of the purpose for which they were being prepared;

(7) Gathered, prepared, or compiled specifically for the use of the Congress by the Congressional Research Service, the Law Library, or any other subdivision of the Library;

(8) Contained in personnel and medical files and similar files the disclosure of which would constitute a clearly unwarranted invasion of privacy;

(9) Contained in investigative records compiled for law enforcement or in files prepared in connection with Government litigation and adjudicative proceedings, except for those portions of such files which are available by law to persons in litigation with the Library;

(10) Contained in or related to examination, operating, or condition reports prepared by, on behalf of, or for the use of an agency responsible for the regulation or supervision of financial institutions; and

(11) Related to specific reader use of the collections, either in the Library or through lending service.

(b) Any reasonably segregable portion of a record shall be provided to any person requesting such record after deletion of the portions which are exempt under this section. A portion of a record shall be considered reasonably segregable when segregation can produce an intelligible record which is not distorted out of context and does not contradict the record being withheld.

[41 FR 2230, Jan. 15, 1976, as amended at 46 FR 48664, Oct. 2, 1981]

§ 703.4 Procedures for inspection and copying of records.

(a) Requests to inspect or copy, or have copied, the Library's records shall be directed to the Chief, Central Services Division. Upon approval, requests for photocopying of records shall be referred to the Photoduplication Service for processing.

(b) Requests for records not available in the public reading facility (see § 703.6) shall be specific and shall identify the precise records or materials which are desired by name, date, number, or other identifying data sufficient to allow the Central Services Division staff to locate, retrieve, and prepare the record for inspection or copying and to delete exempted matter where appropriate. Blanket or generalized requests (such as ''all matters relating to'' a general subject) shall not be honored, and shall be returned to the requester.

(c) Records shall be available for inspection and copying in person during the usual business hours.

(d) Records in media other than print (e.g. microforms and machine media) shall be available for inspection in the medium in which they usually exist, and copies of records in machine media shall be made in media of the Library's selection.

(e) Every effort shall be made to respond to requests with reasonable dispatch. Use of a document by the Library or its staff shall be given precedence over any request. Under no circumstances shall records be removed from the Library's offices.

(f) The Chief of the Central Services Division shall make the initial determination on whether the record described in a request can be identified and located after a reasonable search and, if so, whether the record (or portions thereof) will be made available or will be withheld from disclosure under the provisions of this regulation. In so doing, the Chief shall consult with any division or office in the Library having a continuing substantial interest in the record requested. Where the Chief finds no valid objection or doubt as to the propriety of making the requested record available, the request shall be honored upon payment of the prescribed fees (see § 703.6).

(g) A member of the public who has requested a Library record and has been refused all or part of said record by the Chief, Central Services Division, may request reconsideration by the Chief. The request shall be in writing and include a copy of the initial request as well as the reasons why the requested record, or part thereof, should be made available.

(h) The Chief, Central Services Division, shall reconsider the request and shall grant it or re-affirm the denial with reasons for such. Re-affirmed denials shall be referred to the General Counsel.

(i) The General Counsel shall make the final determination on a request for reconsideration and shall notify the requester thereof, directly, and in writing.

(1) If the final determination reverses in whole or in part the initial determination, the record requested (or portions thereof) shall be made available to the requester.

(2) If the final determination sustains in whole or in part an initial determination, the notification of the final determination shall explain the basis on which the record (or portions thereof) will not be made available. Such decision by the General Counsel shall be the final administrative review within the Library of Congress.

[41 FR 2230, Jan. 15, 1976, as amended at 46 FR 48664, Oct. 2, 1981]

§ 703.5 Public reading facility.

(a) The Library shall maintain a reading facility for the public inspection and copying of Library regulations, opinions, statements of policy, and instructions (including staff manuals) which may be relied upon, used, or cited as authority or precedent in the determination of rights, privileges, and obligations of members of the public in dealing with the Library. This facility shall be open to the public from 8:30 a.m. to 4:30 p.m., except Saturdays, Sundays, and Holidays.

(b) The materials to be available in the public reading facility shall be selected by the General Counsel after consultation with the heads of divisions or offices which may be concerned.

(c) There shall be maintained in the reading facility for public use a current index of materials available in the reading facility.

§ 703.6 Fees.

(a) Fees charged by the Library for the search for and duplication of any records requested shall comply with the following fee schedule:

(1) *Search for records.* There shall be a fee of $7 per hour when the search is conducted by a clerical employee and $10 per hour when the search is conducted by a professional employee. There shall be no charge for searches of less than one hour. In situations involving the use of computers to locate and extract the requested information, charges shall be based on the direct cost to the Library, including labor, material, and computer time.

(2) *Duplication of records.* Records shall be duplicated in accordance with prevailing rates established by the Photoduplication Service and by the Automated Systems Office in the case of machine media.

(3) *Other.* When no specific fee has been established for a service, the Associate Librarian for Management is authorized to establish an appropriate

fee based on ''direct costs'' in accordance with the Office of Management and Budget Circular No. A–25.

(b) The Associate Librarian for Management may determine, in connection with specific requests for records, that the public interest is best served by the provision of the requested records at no cost or at a cost below the above fee schedule and, in those specific instances, is authorized to waive the schedule, in whole or in part.

(c) Fees actually charged a person for the search and duplication of records shall be paid in full prior to issuance of those records. Payment of fees shall be made by a personal check, postal money order or bank draft made payable to the order of the Treasurer of the United States.

[41 FR 2230, Jan. 15, 1976, as amended at 46 FR 48664, Oct. 2, 1981; 51 FR 22076, June 18, 1986]

PART 704—NATIONAL FILM REGISTRY OF THE LIBRARY OF CONGRESS

Subpart A—Films Selected for Inclusion in the National Film Registry

Sec.
704.10 Criteria for the selection of films for inclusion in the National Film Registry.
704.11 Procedures for the public to recommend films for inclusion in the National Film Registry.
704.20 Films selected for inclusion in the National Film Registry in the Library of Congress for 1989.
704.21 Films selected for inclusion in the National Film Registry in the Library of Congress for 1990.
704.22 Films selected for inclusion in the National Film Registry in the Library of Congress for 1991.
704.23 Films selected for inclusion in the National Film Registry in the Library of Congress for 1992.
704.24 Films selected for inclusion in the National Film Registry in the Library of Congress for 1993.

Subpart B [Reserved]

AUTHORITY: Public Law 102–307, 106 Stat. 267 (2 U.S.C. 179).

Subpart A—Films Selected for Inclusion in the National Film Registry

§ 704.10 Criteria for the selection of films for inclusion in the National Film Registry.

(a) All of the films nominated for inclusion in the National Film Registry should reflect the mission of the National Film Registry in the Library of Congress, found in section 202 of the National Film Preservation Act of 1992 (Pub. L. 102–307), of ''maintaining and preserving films that are culturally, historically or aesthetically significant.''

(b) In accordance with the intent of Congress, all of the guidelines for the selection of films in the National Film Registry are intended to be read broadly, so that as many films as possible will be eligible for inclusion in the National Film Registry.

(c) For the purposes of film selection, the term ''film'' means a ''motion picture'' as defined in the U.S. copyright law, except, that the term ''film'' does not include any work not originally fixed on film stock, such as a work fixed on videotape or laser disks. ''Motion pictures'' are defined in the copyright law as: ''audiovisual works consisting of a series of related images which, when shown in succession, impart an impression of motion, together with accompanying sounds, if any.'' 17 U.S.C. 101.

(d) Films should not be considered for inclusion in the National Film Registry if no element or copy of the film exists. While the Librarian intends to promote the goals of film preservation and restoration provided for in the Act, no film will be denied inclusion in the National Film Registry because that film has already been preserved or restored.

(e) No film is eligible for inclusion in the National Film Registry until 10 years after such film's first publication. ''Publication'' is defined in the copyright act as: ''the distribution of copies or phonorecords of a work to the public by sale or other transfer of ownership, or by rental, lease, or lending. The offering to distribute copies or phonorecords to a group of persons for purposes of further distribution, public

performance, or public display, constitutes publication. A public performance or display of a work does not of itself constitute publication.'' 17 U.S.C. 101.

[58 FR 30708, May 27, 1993]

§ 704.11 Procedures for the public to recommend films for inclusion in the National Film Registry.

(a) The public shall be informed of all open meetings of the National Film Preservation Board.

(b) A mailing address within the Library of Congress will be maintained to allow the public to make nominations of films to the Librarian and the National Film Preservation Board. All nominations should include the film title, and any other relevant information necessary to prevent confusion with similarly named titles.

(c) Materials will be available to congressional offices and members of the Board to make information available to the public regarding nominations of films. Materials will also be made available for distribution to libraries, movie theaters, and through the guilds and societies representing directors, producers, screenwriters, actors, cinematographers, film critics, film preservation organizations and representatives of academic institutions with film study programs, in order to encourage broad participation from the general public. Nominations received by the Librarian, will be forwarded to the Board to assist in the film selection process.

(d) All nominations for inclusion of films in the National Film Registry must be submitted in writing to the Librarian of Congress no later than March 30th of each year. All nominations should be mailed to: National Film Registry, Library of Congress, Washington, DC 20540.

[58 FR 30709, May 27, 1993]

§ 704.20 Films selected for inclusion in the National Film Registry in the Library of Congress for 1989.

(a) The Librarian of Congress, Dr. James H. Billington, after consultation with the National Film Preservation Board registers these films in the National Film registry within the Library of Congress for 1989:

(1) The Best Years Of Our Lives (1946)
(2) Casablanca (1942)
(3) Citizen Kane (1941)
(4) The Crowd (1928)
(5) Dr. Strangelove (or, How I Learned To Stop Worrying And Love the Bomb) (1964)
(6) The General (1927)
(7) Gone With The Wind (1939)
(8) The Grapes Of Wrath (1940)
(9) High Noon (1952)
(10) Intolerance (1916)
(11) The Learning Tree (1969)
(12) The Maltese Falcon (1941)
(13) Mr. Smith Goes to Washington (1939)
(14) Modern Times (1936)
(15) Nanook Of The North (1922)
(16) On The Waterfront (1954)
(17) The Searchers (1956)
(18) Singin' In The Rain (1952)
(19) Snow White And The Seven Dwarfs (1937)
(20) Some Like it Hot (1959)
(21) Star Wars (1977)
(22) Sunrise (1927)
(23) Sunset Boulevard (1950)
(24) Vertigo (1958)
(25) The Wizard Of Oz (1939)

(b) In keeping with section 3(c) of the Act, 2 U.S.C. 178b, the Librarian will endeavor to obtain an archival quality copy for each of these twenty-five films for the National Film Board Collection in the Library of Congress.

[55 FR 32570, Aug. 9, 1990]

§ 704.21 Films selected for inclusion in the National Film Registry in the Library of Congress for 1990.

(a) The Librarian of Congress, Dr. James H. Billington, after consultation with the National Film Preservation Board registers these films in the National Film Registry within the Library of Congress for 1990:

(1) All About Eve (1950)
(2) All Quiet On the Western Front (1930)
(3) Bringing Up Baby (1938)
(4) Dodsworth (1936)
(5) Duck Soup (1933)
(6) Fantasia (1940)
(7) The Freshman (1925)
(8) The Godfather (1972)
(9) The Great Train Robbery (1903)
(10) Harlan County, U.S.A. (1976)
(11) How Green Was My Valley (1941)
(12) It's A Wonderful Life (1946)
(13) Killer Of Sheep (1977)
(14) Love Me Tonight (1932)
(15) Meshes Of the Afternoon (1943)
(16) Ninotchka (1939)
(17) Primary (1960)
(18) Raging Bull (1980)
(19) Rebel Without A Cause (1955)
(20) Red River (1948)

(21) The River (1937)
(22) Sullivan's Travels (1941)
(23) Top Hat (1935)
(24) The Treasure Of The Sierra Madre (1948)
(25) A Woman Under The Influence (1974)

(b) In keeping with section 3(c) of the Act (2 U.S.C. 178b), the Librarian will endeavor to obtain an archival quality copy for each of these twenty-five films for the National Film Board Collection in the Library of Congress.

[55 FR 52845, Dec. 24, 1990]

§ 704.22 Films Selected for Inclusion in the National Film Registry in the Library of Congress for 1991.

(a) The Librarian of Congress, Dr. James H. Billington, after consultation with the National Film Preservation Board registers these films in the National Film Registry within the Library of Congress for 1991:

(1) 2001: A Space Odyssey (1968)
(2) Battle Of San Pietro, The (1945)
(3) Blood Of Jesus, The (1941)
(4) Chinatown (1974)
(5) City Lights (1931)
(6) David Holzman's Diary (1968)
(7) Frankenstein (1931)
(8) Gertie The Dinosaur (1914)
(9) Gigi (1958)
(10) Greed (1924)
(11) High School (1968)
(12) I Am A Fugitive From A Chain Gang (1932)
(13) Italian, The (1915)
(14) King Kong (1933)
(15) Lawrence Of Arabia (1962)
(16) Magnificent Ambersons, The (1942)
(17) My Darling Clementine (1946)
(18) Out Of The Past (1947)
(19) Place In The Sun, A (1951)
(20) Poor Little Rich Girl (1917)
(21) Prisoner of Zenda, The (1937)
(22) Shadow Of A Doubt (1943)
(23) Sherlock, Jr. (1924)
(24) Tevye (1939)
(25) Trouble In Paradise (1932)

(b) In keeping with section 3(c) of the Act, 2 U.S.C. 178b, the Librarian will endeavor to obtain an archival quality copy for each of these twenty-five films for the National Film Board Collection in the Library of Congress.

[56 FR 49414, Sept. 30, 1991]

§ 704.23 Films Selected for Inclusion in the National Film Registry in the Library of Congress for 1992.

(a) The Librarian of Congress, Dr. James H. Billington, after consultation with the National Film Preservation Board, registers these films in the National Film Registry within the Library of Congress for 1992:

1. Adam's Rib (1949)
2. Annie Hall (1977)
3. The Bank Dick (1940)
4. Big Business (1929)
5. The Big Parade (1925)
6. The Birth of a Nation (1915)
7. Bonnie and Clyde (1967)
8. Carmen Jones (1954)
9. Castro Street (1966)
10. Detour (1946)
11. Dog Star Man (1964)
12. Double Indemnity (1944)
13. Footlight Parade (1933)
14. The Gold Rush (1925)
15. Letter From an Unknown Woman (1948)
16. Morocco (1930)
17. Nashville (1975)
18. The Night of the Hunter (1955)
19. Paths of Glory (1957)
20. Psycho (1960)
21. Ride the High Country (1962)
22. Salesman (1969)
23. Salt of the Earth (1954)
24. What's Opera, Doc? (1957)
25. Within Our Gates (1920)

(b) In keeping with section 206(a) of the Act, 2 U.S.C. 179d(a), the Librarian shall endeavor to obtain an archival quality copy for each of these twenty-five films for the National Film Registry Collection of the Library of Congress.

[59 FR 35034, July 8, 1994]

§ 704.24 Films Selected for Inclusion in the National Film Registry in the Library of Congress for 1993.

(a) The Librarian of Congress, Dr. James H. Billington, after consultation with the National Film Preservation Board, registers these films in the National Film Registry within the Library of Congress for 1993:

1. An American in Paris (1951)
2. Badlands (1973)
3. The Black Pirate (1926)
4. Blade Runner (1982)
5. Cat People (1942)
6. The Cheat (1915)
7. Chulas Fronteras (1976)
8. Eaux D'Artifice (1953)
9. The Godfather, Part II (1974)

10. His Girl Friday (1940)
11. It Happened One Night (1934)
12. Lassie Come Home (1943)
13. Magical Maestro (1952)
14. March of Time: Inside Nazi Germany—1938 (1938)
15. A Night at the Opera (1935)
16. Nothing But a Man (1964)
17. One Flew Over the Cuckoo's Nest (1975)
18. Point of Order (1964)
19. Shadows (1959)
20. Shane (1953)
21. Sweet Smell of Success (1957)
22. Touch of Evil (1958)
23. Where Are My Children? (1916)
24. The Wind (1928)
25. Yankee Doodle Dandy (1942)

(b) In keeping with section 206(a) of the Act, 2 U.S.C. 179d(a), the Librarian shall endeavor to obtain an archival quality copy for each of these twenty-five films for the National Film Registry Collection of the Library of Congress.

[59 FR 35035, July 8, 1994]

Subpart B [Reserved]

PART 705—FINANCIAL ADMINISTRATION

AUTHORITY: 5 U.S.C. 5514 and 5 CFR 550.1101.

§ 705.1 Salary offset

(a) *Purpose.* This part describes the rights of current and former staff members in the collection of debts owed to the Federal Government by them and sets out the procedures for collecting debts through deductions from their pay following due process.

(b) *Definitions.*—(1) *Debt* is an amount owed to the U.S. Government from insured or guaranteed loans, fees, leases, rents, royalties, services, sales of real or personal property, overpayments, penalties, damages, interest, fines and forfeitures (except those arising under the Uniform Code of Military Justice), and all other similar sources.

(2) *Disposable pay,* for purposes of this part, means that part of current basic pay, special pay, incentive pay, retirement pay, retainer pay, or other authorized pay remaining after the deduction of any amount required by law to be withheld, such as Federal taxes, retirement, court-ordered payments, and FICA.

(3) *Staff member* refers to current and former employees who owe debts to the Library and/or other Federal Government agencies.

(c) *Procedures.*—(1) *Notification of indebtedness.* The Director of Human Resources, or designee, shall notify the staff member, in writing, of the individual's indebtedness to the Library and the intention of the Library to collect this debt by deductions from the individual's pay. This notice shall be given not less than 30 days before any deduction is made. This notice shall state, at a minimum:

(i) The Library's determination that a debt is owed, including the origin, nature, and amount of the debt;

(ii) The Library's intention to collect the debt by means of deduction from the staff member's disposable pay account;

(iii) The amount, frequency, proposed beginning date, and duration of the intended deductions;

(iv) An explanation of the Library's policy concerning interest, penalties, and administrative costs, including a statement that such assessments must be made unless excused;

(v) The staff member's right to inspect and to copy Government records relating to the debt or, if he or she or his or her representative cannot personally inspect the records, to request and receive a copy of such records;

(vi) If not previously provided, the opportunity (under terms agreeable to the Library) to establish a schedule for the voluntary repayment of the debt or to enter into a written agreement to establish a schedule for the repayment of the debt in lieu of offset (the agreement must be in writing, signed by both the staff member and the Library, and documented in the Library's files);

(vii) The staff member's right to a hearing conducted by an official arranged for or engaged by the Library (an administrative law judge or, alternatively, a hearing official not under the control of the Librarian of Congress) if a petition is filed as prescribed by the Library;

(viii) The method and time period for petitioning for a hearing;

(ix) That the timely filing of a petition for hearing will stay the commencement of collection proceedings;

(x) That a final decision on the hearing, if one is requested, will be issued at the earliest practicable date, but not later than 60 days after the filing of the petition requesting the hearing unless the staff member requests and the hearing official grants a delay in the proceedings;

(xi) That any knowingly false or frivolous statements, representations, or evidence may subject the staff member to

(A) Disciplinary procedures appropriate under Library of Congress Regulation 2020–3, or any other applicable regulations or statutes,

(B) Penalties under the False Claim Act, Section 3729 of Title 31, U.S. Code, or any other applicable statutory authority, or

(C) Criminal penalties under Sections 286, 287, 1001, and 1002 of Title 18, U.S. Code, or any other applicable statutory authority;

(xii) Any other rights and remedies available to the staff member under statutes or regulations governing the program for which the collection is being made;

(xiii) Unless there are applicable contractual or statutory provisions to the contrary, that amounts paid on or deducted for the debt which are later waived or found not owed to the United States will be promptly refunded to the staff member;

(xiv) That if the staff member elects not to contest the determination of indebtedness or the amount or the terms of a repayment schedule, the staff member may still wish to exercise the right to request a waiver of the collection of the indebtedness pursuant to the provisions of Library of Congress Regulation 1556, *Claims* (if the amount of the indebtedness exceeds $1,500, the staff member should be advised that a final determination must be made by the Comptroller General of the United States); and

(xv) That any involuntary payments already made or withheld from salary of any portion of the indebtedness will not be construed as a waiver by the staff member of any rights that he or she may have under this part.

(2) *Amount of deduction.* If possible, the debt shall be collected in one lump sum. If multiple deductions are necessary, however, the amount deducted from a staff member's pay for any single period will not exceed 15 percent of disposable pay, except that a greater percentage may be deducted upon the written consent of the individual involved. The staff member may enter into a written agreement for a repayment schedule different from that proposed so long as the terms are approved by the Library. If the individual retires or resigns or if his or her employment otherwise ends before collection of the amount of the indebtedness is completed, deduction shall be made from subsequent payments of any nature due the individual.

(3) *Petitions for hearing.* (i) To elect a hearing, the staff member must notify the Director, Human Resources, no later than 15 days after the receipt of the notification of indebtedness. A timely filing of a petition for hearing will stay any further commencement of collection proceedings. A final decision on the hearing will be issued at the earliest practicable date, but not later than 60 days after the filing of petition, unless the individual requests and the hearing official grants a delay in the proceedings.

(ii) The petition or statement must be signed by the staff member and must fully identify and explain with reasonable specificity all the facts, evidence, and witnesses, if any, which he or she believes supports his or her position.

(iii) Petitions for hearings made later than 15 days after the receipt of the notification of indebtedness will be accepted provided the staff member can show that the delay was because of circumstances beyond his or her control or because of failure to receive notice of the time limit (unless otherwise aware of it).

(4) *Form of hearings and final decisions.* (i) The staff member shall be provided an appropriate hearing as decided by the hearing official, based on the nature of the transactions giving rise to the debt. The hearing official shall be guided by the procedures set out in 4 CFR 102.3(c) in deciding on the type of hearing to provide.

(ii) A written decision will be provided to the staff member and must, at a minimum, state the fact(s) purported

to support the nature and origin of the alleged debt; the hearing official's analysis, findings, and conclusions, in light of the hearing, as to the staff member's or the Library's grounds; the amount and validity of the alleged debt; and, where applicable, the repayment schedule.

(d) *Creditor agency is not the Library of Congress.* When the Library receives from a creditor agency a debt claim properly certified in accordance with 5 CFR 550.1108(a), deductions shall be scheduled to begin at the next officially established pay interval. The Director, Human Resources, shall provide the employee with written notice stating that the Library has received a certified debt claim from the creditor agency (including the amount) and written notice of the date deductions from salary will commence and of the amount of such deductions. When the Library receives an incomplete debt claim from a creditor agency, the Director, Human Resources, shall return the debt claim with a written notice that procedures under 5 U.S.C. 5514 must be followed and a properly determined debt claim received before action will be taken to collect from the employee's pay account.

(e) *Exclusions and exceptions.* (1) This part does not apply to debts where collection of the debt is explicitly provided for or prohibited by another statute, or to debts of $1 or less, which, it is hereby determined, is not cost effective to attempt to collect (65 Comp. Gen. 843, September 29, 1986).

(2) An exception to the entitlement of notice, hearings, written responses, and final decisions provided for under paragraph (c) of this section is made for overpayments arising out of an employee's election of coverage or a change in coverage under a Federal benefits program requiring periodic deductions from pay, if the amount to be recovered was accumulated over four pay periods or less.

[59 FR 38367, July 28, 1994]

PARTS 706—799 [RESERVED]

CHAPTER VIII—ADVISORY COUNCIL ON HISTORIC PRESERVATION

Part		*Page*
800	Protection of historic and cultural properties.	84
801	Historic preservation requirements of the Urban Development Action Grant Program	96
805	Procedures for implementation of National Environmental Policy Act	109
810	Freedom of Information Act regulations	111
811	Conflicts of interest	113
812	Enforcement of nondiscrimination on the basis of handicap in programs or activities conducted by the Advisory Council on Historic Preservation ...	117
813—899	[Reserved]	

PART 800—PROTECTION OF HISTORIC AND CULTURAL PROPERTIES

Subpart A—Background and Policy

Sec.
800.1 Authorities, purposes, and participants.
800.2 Definitions.

Subpart B—The Section 106 Process

800.3 General.
800.4 Identifying historic properties.
800.5 Assessing effects.
800.6 Affording the Council an opportunity to comment.
800.7 Agreements with States for section 106 reviews.
800.8 Documentation requirements.
800.9 Criteria of effect and adverse effect.

Subpart C—Special Provisions

800.10 Protecting National Historic Landmarks.
800.11 Properties discovered during implementation of an undertaking.
800.12 Emergency undertakings.
800.13 Programmatic Agreements.
800.14 Coordination with other authorities.
800.15 Counterpart regulations.

AUTHORITY: Pub. L. 89–665, 80 Stat. 915 (16 U.S.C. 470), as amended, 84 Stat. 204 (1970), 87 Stat. 139 (1973), 90 Stat. 1320 (1976), 92 Stat. 3467 (1978): E.O. 11593, 3 CFR 1971 Comp., p. 154.

SOURCE: 51 FR 31118, Sept. 2, 1986, unless otherwise noted.

Subpart A—Background and Policy

§ 800.1 Authorities, purposes, and participants.

(a) *Authorities.* Section 106 of the National Historic Preservation Act requires a Federal agency head with jurisdiction over a Federal, federally assisted, or federally licensed undertaking to take into account the effects of the agency's undertaking on properties included in or eligible for the National Register of Historic Places and, prior to approval of an undertaking, to afford the Advisory Council on Historic Preservation a reasonable opportunity to comment on the undertaking. Section 110(f) of the Act requires that Federal agency heads, to the maximum extent possible, undertake such planning and actions as may be necessary to minimize harm to any National Historic Landmark that may be directly and adversely affected by an undertaking and, prior to approval of such undertaking, afford the Council a reasonable opportunity to comment. These regulations define the process used by a Federal agency to meet these responsibilities, commonly called the section 106 process.

(b) *Purposes of the section 106 process.* The Council seeks through the section 106 process to accommodate historic preservation concerns with the needs of Federal undertakings. It is designed to identify potential conflicts between the two and to help resolve such conflicts in the public interest. The Council encourages this accommodation through consultation among the Agency Official, the State Historic Preservation Officer, and other interested persons during the early stages of planning. The Council regards the consultation process as an effective means for reconciling the interests of the consulting parties. Integration of the section 106 process into the normal administrative process used by agencies for project planning ensures early, systematic consideration of historic preservation issues. To this end, the Council encourages agencies to examine their administrative processes to see that they provide adequately for the efficient identification and consideration of historic properties, that they provide for participation by the State Historic Preservation Officer and others interested in historic preservation, that they provide for timely requests for Council comment, and that they promote cost-effective implementation of the section 106 process. When impediments are found to exist in the agency's administrative process, the agency is encouraged to consult with the Council to develop special section 106 procedures suited to the agency's needs.

(c) *Participants in the section 106 process*—(1) *Consulting parties.* Consulting parties are the primary participants in the section 106 process whose responsibilities are defined by these regulations. Consulting parties may include:

(i) *Agency Official.* The Agency Official with jurisdiction over an undertaking has legal responsibility for complying with section 106. It is the responsibility of the Agency Official to identify and evaluate affected historic properties, assess an undertaking's effect upon them, and afford the Council its comment opportunity. The Agency Official may use the services of grantees, applicants, consultants, or designees to prepare the necessary information and analyses, but remains responsible for section 106 compliance. The Agency Official should involve applicants for Federal assistance or approval in the section 106 process as appropriate in the manner set forth below.

(ii) *State Historic Preservation Officer.* The State Historic Preservation Officer coordinates State participation in the implementation of the National Historic Preservation Act and is a key participant in the section 106 process. The role of the State Historic Preservation Officer is to consult with and assist the Agency Official when identifying historic properties, assessing effects upon them, and considering alternatives to avoid or reduce those effects. The State Historic Preservation Officer reflects the interests of the State and its citizens in the preservation of their cultural heritage and helps the Agency Official identify those persons interested in an undertaking and its effects upon historic properties. When the State Historic Preservation Officer declines to participate or does not respond within 30 days to a written request for participation, the Agency Official shall consult with the Council, without the State Historic Preservation Officer, to complete the section 106 process. The State Historic Preservation Officer may assume primary responsibility for reviewing Federal undertakings in the State by agreement with the Council as prescribed in § 800.7 of these regulations.

(iii) *Council.* The Council is responsible for commenting to the Agency Official on an undertaking that affects historic properties. The official authorized to carry out the Council's responsibilities under each provision of the regulations is set forth in a separate, internal delegation of authority.

(2) *Interested persons.* Interested persons are those organizations and individuals that are concerned with the effects of an undertaking on historic properties. Certain provisions in these regulations require that particular interested persons be invited to become consulting parties under certain circumstances. In addition, whenever the Agency Official, the State Historic Preservation Officer, and the Council, if participating, agree that active participation of an interested person will advance the objectives of section 106, they may invite that person to become a consulting party. Interested persons may include:

(i) *Local governments.* Local governments are encouraged to take an active role in the section 106 process when undertakings affect historic properties within their jurisdiction. When a local government has legal responsibility for section 106 compliance under programs such as the Community Development Block Grant Program, participation as a consulting party is required. When no such legal responsibility exists, the extent of local government participation is at the discretion of local government officials. If the State Historic Preservation Officer, the appropriate local government, and the Council agree, a local government whose historic preservation program has been certified pursuant to section 101(c)(1) of the Act may assume any of the duties that are given to the State Historic Preservation Officer by these regulations or that originate from agreements concluded under these regulations.

(ii) *Applicants for Federal assistance, permits, and licenses.* When the undertaking subject to review under section 106 is proposed by an applicant for Federal assistance or for a Federal permit or license, the applicant may choose to participate in the section 106 process in the manner prescribed in these regulations.

(iii) *Indian tribes.* The Agency Official, the State Historic Preservation Officer, and the Council should be sensitive to the special concerns of Indian tribes in historic preservation issues, which often extend beyond Indian lands to other historic properties. When an

undertaking will affect Indian lands, the Agency Official shall invite the governing body of the responsible tribe to be a consulting party and to concur in any agreement. When an Indian tribe has established formal procedures relating to historic preservation, the Agency Official, State Historic Preservation Officer, and Council shall, to the extent feasible, carry out responsibilities under these regulations consistent with such procedures. An Indian tribe may participate in activities under these regulations in lieu of the State Historic Preservation Officer with respect to undertakings affecting its lands, provided the Indian tribe so requests, the State Historic Preservation Officer concurs, and the Council finds that the Indian tribe's procedures meet the purposes of these regulations. When an undertaking may affect properties of historic value to an Indian tribe on non-Indian lands, the consulting parties shall afford such tribe the opportunity to participate as interested persons. Traditional cultural leaders and other Native Americans are considered to be interested persons with respect to undertakings that may affect historic properties of significance to such persons.

(iv) *The public.* The Council values the views of the public on historic preservation questions and encourages maximum public participation in the section 106 process. The Agency Official, in the manner described below, and the State Historic Preservation Officer should seek and consider the views of the public when taking steps to identify historic properties, evaluate effects, and develop alternatives. Public participation in the section 106 process may be fully coordinated with, and satisfied by, public participation programs carried out by Agency Officials under the authority of the National Environmental Policy Act and other pertinent statutes. Notice to the public under these statutes should adquately inform the public of preservation issues in order to elicit public views on such issues that can then be considered and resolved, when possible, in decisionmaking. Members of the public with interests in an undertaking and its effects on historic properties should be given reasonable opportunity to have an active role in the section 106 process.

§ 800.2 Definitions.

(a) *Act* means the National Historic Preservation Act of 1966, as amended, 16 U.S.C. 470–470w–6.

(b) *Agency Official* means the Federal agency head or a designee with authority over a specific undertaking, including any State or local government official who has been delegated legal responsibility for compliance with section 106 and section 110(f) in accordance with law.

(c) *Area of potential effects* means the geographic area or areas within which an undertaking may cause changes in the character or use of historic properties, if any such properties exist.

(d) *Council* means the Advisory Council on Historic Preservation or a Council member or employee designated to act for the Council.

(e) *Historic property* means any prehistoric or historic district, site, building, structure, or object included in, or eligible for inclusion in, the National Register. This term includes, for the purposes of these regulations, artifacts, records, and remains that are related to and located within such properties. The term *eligible for inclusion in the National Register* includes both properties formally determined as such by the Secretary of the Interior and all other properties that meet National Register listing criteria.

(f) *Indian lands* means all lands under the jurisdiction or control of an Indian tribe.

(g) *Indian tribe* means the governing body of any Indian tribe, band, nation, or other group that is recognized as an Indian tribe by the Secretary of the Interior and for which the United States holds land in trust or restricted status for that entity or its members. Such term also includes any Native village corporation, regional corporation, and Native Group established pursuant to the Alaska Native Claims Settlement Act, 43 U.S.C. 1701, *et seq.*

(h) *Interested person* means those organizations and individuals that are concerned with the effects of an undertaking on historic properties.

(i) *Local government* means a city, county, parish, township, municipality,

borough, or other general purpose political subdivision of a State.

(j) *National Historic Landmark* means a historic property that the Secretary of the Interior has designated a National Historic Landmark.

(k) *National Register* means the National Register of Historic Places maintained by the Secretary of the Interior.

(l) *National Register Criteria* means the criteria established by the Secretary of the Interior for use in evaluating the eligibility of properties for the National Register (36 CFR part 60).

(m) *Secretary* means the Secretary of the Interior.

(n) *State Historic Preservation Officer* means the official appointed or designated pursuant to section 101(b)(1) of the Act to administer the State historic preservation program or a representative designated to act for the State Historic Preservation Officer.

(o) *Undertaking* means any project, activity, or program that can result in changes in the character or use of historic properties, if any such historic properties are located in the area of potential effects. The project, activity, or program must be under the direct or indirect jurisdiction of a Federal agency or licensed or assisted by a Federal agency. Undertakings include new and continuing projects, activities, or programs and any of their elements not previously considered under section 106.

Subpart B—The Section 106 Process

§800.3 General.

(a) *Scope.* The procedure in this subpart guides Agency Officials, State Historic Preservation Officers, and the Council in the conduct of the section 106 process. Alternative methods of meeting section 106 obligations are found in §800.7, governing review of undertakings in States that have entered into agreements with the Council for section 106 purposes, and §800.13, governing Programmatic Agreements with Federal agencies that pertain to specific programs or activities. Under each of these methods, the Council encourages Federal agencies to reach agreement on developing alternatives or measures to avoid or reduce effects on historic properties that meet both the needs of the undertaking and preservation concerns.

(b) *Flexible application.* The Council recognizes that the procedures for the Agency Official set forth in these regulations may be implemented by the Agency Official in a flexible manner relfecting differing program requirements, as long as the purposes of section 106 of the Act and these regulations are met.

(c) *Timing.* Section 106 requires the Agency Official to complete the section 106 process prior to the approval of the expenditure of any Federal funds on the undertaking or prior to the issuance of any license or permit. The Council does not interpret this language to bar an Agency Official from expending funds on or authorizing nondestructive planning activities preparatory to an undertaking before complying with section 106, or to prohibit phased compliance at different stages in planning. The Agency Official should ensure that the section 106 process is initiated early in the planning stages of the undertaking, when the widest feasible range of alternatives is open for consideration. The Agency Official should establish a schedule for completing the section 106 process that is consistent with the planning and approval schedule for the undertaking.

§800.4 Identifying historic properties.

(a) *Assessing information needs.* (1) Following a determination by the Agency Official that a proposed project, activity, or program constitutes an undertaking and after establishing the undertaking's area of potential effects, the Agency Official shall:

(i) Review existing information on historic properties potentially affected by the undertaking, including any data concerning the likelihood that undentified historic properties exist in the area of potential effects;

(ii) Request the views of the State Historic Preservation Officer on further actions to identify historic properties that may be affected; and

(iii) Seek information in acordance with agency planning processes from

local governments, Indian tribes, public and private organizations, and other parties likely to have knowledge of or concerns with historic properties in the area.

(2) Based on this assessment, the Agency Official should determine any need for further actions, such as field surveys and predictive modeling, to identify historic properties.

(b) *Locating historic properties.* In consultation with the State Historic Preservation Officer, the Agency Official shall make a reasonable and good faith effort to identify historic properties that may be affected by the undertaking and gather sufficient information to evaluate the eligibility of these properties for the National Register. Efforts to identify historic properties should follow the Secretary's ''Standards and Guidelines for Archeology and Historic Preservation'' (48 FR 44716) and agency programs to meet the requirements of section 110(a)(2) of the Act.

(c) *Evaluating historical significance.* (1) In consultation with the State Historic Preservation Officer and following the Secretary's Standards and Guidelines for Evaluation, the Agency Official shall apply the National Register Criteria to properties that may be affected by the undertaking and that have not been previously evaluated for National Register eligibility. The passage of time or changing perceptions of significance may justify reevaluation of properties that were previously determined to be eligible or ineligible.

(2) If the Agency Official and the State Historic Preservation Officer agree that a property is eligible under the criteria, the property shall be considered eligible for the National Register for section 106 purposes.

(3) If the Agency Official and the State Historic Preservation Officer agree that the criteria are not met, the property shall be considered not eligible for the National Register for section 106 purposes.

(4) If the Agency Official and the State Historic Preservation Officer do not agree, or if the Council or the Secretary so request, the Agency Official shall obtain a determination from the Secretary of the Interior pursuant to the applicable National Park Service regulations.

(5) If the State Historic Preservation Officer does not provide views, then the State Historic Preservation Officer is presumed to agree with the Agency Official's determination for the purpose of this subsection.

(d) *When no historic properties are found.* If the Agency Official determines in accordance with § 800.4 paragraphs (a) through (c) that there are no historic properties that may be affected by the undertaking, the Agency Official shall provide documentation of this finding to the State Historic Preservation Officer. The Agency Official should notify interested persons and parties known to be interested in the undertaking and its possible effects on historic properties and make the documentation available to the public. In these circumstances, the Agency Official is not required to take further steps in the section 106 process.

(e) *When historic properties are found.* If there are historic properties that the undertaking may affect, the Agency official shall assess the effects in accordance with § 800.5.

§ 800.5 Assessing effects.

(a) *Applying the Criteria of Effect.* In consultation with the State Historic Preservation Officer, the Agency Official shall apply the Criteria of Effect (§ 800.9(a)) to historic properties that may be affected, giving consideration to the views, if any, of interested persons.

(b) *When no effect is found.* If the Agency Official finds the undertaking will have no effect on historic properties, the Agency Official shall notify the State Historic Preservation Officer and interested persons who have made their concerns known to the Agency Official and document the findings, which shall be available for public inspection. Unless the State Historic Preservation Officer objects within 15 days of receiving such notice, the Agency Official is not required to take any further steps in the section 106 process. If the State Historic Preservation Officer files a timely objection, then the procedures described in § 800.5(c) are followed.

(c) *When an effect is found.* If an effect on historic properties is found, the Agency Official, in consultation with the State Historic Preservation Officer, shall apply the Criteria of Adverse Effect (§ 800.9(b)) to determine whether the effect of the undertaking should be considered adverse.

(d) *When the effect is not considered adverse.* (1) If the Agency Official finds the effect is not adverse, the Agency Official shall:

(i) Obtain the State Historic Preservation Officer's concurrence with the finding and notify and submit to the Council summary documentation, which shall be available for public inspection; or

(ii) Submit the finding with necessary documentation (§ 800.8(a)) to the Council for a 30-day review period and notify the State Historic Preservation Officer.

(2) If the Council does not object to the finding of the Agency Official within 30 days of receipt of notice, or if the Council objects but proposes changes that the Agency Official accepts, the Agency Official is not required to take any further steps in the section 106 process other than to comply with any agreement with the State Historic Preservation Officer or Council concerning the undertaking. If the Council objects and the Agency Official does not agree with changes proposed by the Council, then the effect shall be considered as adverse.

(e) *When the effect is adverse.* If an adverse effect on historic properties is found, the Agency Official shall notify the Council and shall consult with the State Historic Preservation Officer to seek ways to avoid or reduce the effects on historic properties. Either the Agency Official or the State Historic Preservation Officer may request the Council to participate. The Council may participate in the consultation without such a request.

(1) *Involving interested persons.* Interested persons shall be invited to participate as consulting parties as follows when they so request:

(i) The head of a local government when the undertaking may affect historic properties within the local government's jurisdiction;

(ii) The representative of an Indian tribe in accordance with § 800.1(c)(2)(iii);

(iii) Applicants for or holders of grants, permits, or licenses, and owners of affected lands; and

(iv) Other interested persons when jointly determined appropriate by the Agency Official, the State Historic Preservation Officer, and the Council, if participating.

(2) *Documentation.* The Agency Official shall provide each of the consulting parties with the documentation set forth in § 800.8(b) and such other documentation as may be developed in the course of consultation.

(3) *Informing the public.* The Agency Official shall provide an adequate opportunity for members of the public to receive information and express their views. The Agency Official is encouraged to use existing agency public involvement procedures to provide this opportunity. The Agency Official, State Historic Preservation Officer, or the Council may meet with interested members of the public or conduct a public information meeting for this purpose.

(4) *Agreement.* If the Agency Official and the State Historic Preservation Officer agree upon how the effects will be taken into account, they shall execute a Memorandum of Agreement. When the Council participates in the consultation, it shall execute the Memorandum of Agreement along with the Agency Official and the State Historic Preservation Officer. When the Council has not participated in consultation, the Memorandum of Agreement shall be submitted to the Council for comment in accordance with § 800.6(a). As appropriate, the Agency Official, the State Historic Preservation Officer, and the Council, if participating, may agree to invite other consulting parties to concur in the agreement.

(5) *Amendments.* The Agency Official, the State Historic Preservation Officer, and the Council, if it was a signatory to the original agreement, may subsequently agree to an amendment to the Memorandum of Agreement. When the Council is not a party to the Memorandum of Agreement, or the Agency Official and the State Historic Preservation Officer cannot agree on changes to

the Memorandum of Agreement, the proposed changes shall be submitted to the Council for comment in accordance with § 800.6.

(6) *Ending consultation.* The Council encourages Agency Officials and State Historic Preservation Officers to utilize the consultation process to the fullest extent practicable. After initiating consultation to seek ways to reduce or avoid effects on historic properties, State Historic Preservation Officer, the Agency Official, or the Council, at its discretion, may state that further consultation will not be productive and thereby terminate the consultation process. The Agency Official shall then request the Council's comments in accordance with § 800.6(b) and notify all other consulting parties of its requests.

§ 800.6 Affording the Council an opportunity to comment.

(a) *Review of a Memorandum of Agreement.* (1) When an Agency Official submits a Memorandum of Agreement accompanied by the documentation specified in § 800.8 (b) and (c), the Council shall have 30 days from receipt to review it. Before this review period ends, the Council shall:

(i) Accept the Memorandum of Agreement, which concludes the section 106 process, and informs all consulting parties; or

(ii) Advise the Agency Official of changes to the Memorandum of Agreement that would make it acceptable; subsequent agreement by the Agency Official, the State Historic Preservation Officer, and the Council concludes the section 106 process; or

(iii) Decide to comment on the undertaking, in which case the Council shall provide its comments within 60 days of receiving the Agency Official's submission, unless the Agency Official agrees otherwise.

(2) If the Agency Official, the State Historic Preservation Officer, and the Council do not reach agreement in accordance with § 800.6(a)(1)(ii), the Agency Official shall notify the Council, which shall provide its comments within 30 days of receipt of notice.

(b) *Comment when there is no agreement.* (1) When no Memorandum of Agreement is submitted, the Agency Official shall request Council comment and provide the documentation specified in § 800.8(d). When requested by the Agency Official, the Council shall provide its comments within 60 days of receipt of the Agency Official's request and the specified documentation.

(2) The Agency Official shall make a good faith effort to provide reasonably available additional information concerning the undertaking and shall assist the Council in arranging an onsite inspection and public meeting when requested by the Council.

(3) The Council shall provide its comments to the head of the agency requesting comment. Copies shall be provided to the State Historic Preservation Officer, interested persons, and others as appropriate.

(c) *Response to Council comment.* (1) When a Memorandum of Agreement becomes final in accordance with § 800.6(a)(1) (i) or (ii), the Agency Official shall carry out the undertaking in accordance with the terms of the agreement. This evidences fulfillment of the agency's section 106 responsibilities. Failure to carry out the terms of a Memorandum of Agreement requires the Agency Official to resubmit the undertaking to the Council for comment in accordance with § 800.6.

(2) When the Council had commented pursuant to § 800.6(b), the Agency Official shall consider the Council's comments in reaching a final decision on the proposed undertaking. The Agency Official shall report the decision to the Council, and if possible, should do so prior to initiating the undertaking.

(d) *Foreclosure of the Council's opportunity to comment.* (1) The Council may advise an Agency Official that it considers the agency has not provided the Council a reasonable opportunity to comment. The decision to so advise the Agency Official will be reached by a majority vote of the Council or by a majority vote of a panel consisting of three or more Council members with the concurrence of the Chairman.

(2) The Agency Official will be given notice and a reasonable opportunity to respond prior to a proposed Council determination that the agency has foreclosed the Council's opportunity to comment.

(e) *Public requests to the Council.* (1) When requested by any person, the Council shall consider an Agency Official's finding under §§800.4(b), 800.4(c), 800.4(d), or 800.5(b), and, within 30 days of receipt of the request, advise the Agency Official, the State Historic Preservation Officer, and the person making the request of its views of the Agency Official's finding.

(2) In light of the Council views, the Agency Official should reconsider the finding. However, an inquiry to the Council will not suspend action on an undertaking.

(3) When the finding concerns the eligibility of a property for the National Register, the Council shall refer the matter to the Secretary.

[51 FR 31118, Sept. 2, 1986; 52 FR 25376, July 7, 1987]

§800.7 Agreements with States for section 106 reviews.

(a) *Establishment of State agreements.* (1) Any State Historic Preservation Officer may enter into an agreement with the Council to substitute a State review process for the procedures set forth in these regulations, provided that:

(i) The State historic preservation program has been approved by the Secretary pursuant to section 101(b)(1) of the Act; and

(ii) The Council, after analysis of the State's review process and consideration of the views of Federal and State agencies, local governments, Indian tribes, and the public, determines that the State review process is at least as effective as, and no more burdensome than, the procedures set forth in these regulations in meeting the requirements of section 106.

(2) The Council, in analyzing a State's review process pursuant to §800.7(a)(1)(ii), shall:

(i) Review relevant State laws, Executive orders, internal directives, standards, and guidelines;

(ii) Review the organization of the State's review process;

(iii) Solicit and consider the comments of Federal and State agencies, local governments, Indian tribes, and the public;

(iv) Review the results of program reviews carried out by the Secretary; and

(v) Review the record of State participation in the section 106 process.

(3) The Council will enter into an agreement with a State under this section only upon determining, at minimum, that the State has a demonstrated record of performance in the section 106 process and the capability to administer a comparable process at the State level.

(4) A State agreement shall be developed through consultation between the State Historic Preservation Officer and the Council and concurred in by the Secretary before submission to the Council for approval. The Council may invite affected Federal and State agencies, local governments, Indian tribes, and other interested persons to participate in this consultation. The agreement shall:

(i) Specify the historic preservation review process employed in the State, showing that this process is at least as effective as, and no more burdensome than, that set forth in these regulations;

(ii) Establish special provisions for participation of local governments or Indian tribes in the review of undertakings falling within their jurisdiction, when appropriate;

(iii) Establish procedures for public participation in the State review process;

(iv) Provide for Council review of actions taken under its terms, and for appeal of such actions to the Council; and

(v) Be certified by the Secretary as consistent with the Secretary's Standards and Guidelines for Archaeology and Historic Preservation.

(5) Upon concluding a State agreement, the Council shall publish notice of its execution in the FEDERAL REGISTER and make copies of the State agreement available to all Federal agencies.

(b) *Review of undertakings when a State agreement is in effect.* (1) When a State agreement under §800.7(a) is in effect, an Agency Official may elect to comply with the State review process in lieu of compliance with these regulations.

(2) At any time during review of an undertaking under a State agreement, an Agency Official may terminate such

review and comply instead with §§ 800.4 through 800.6 of these regulations.

(3) At any time during review of an undertaking under a State agreement, the Council may participate. Participants are encouraged to draw upon the Council's expertise as appropriate.

(c) *Monitoring and termination of State agreements.* (1) The Council shall monitor activities carried out under State agreements, in coordination with the Secretary of the Interior's approval of State programs under section 101(b)(1) of the Act. The Council may request that the Secretary monitor such activities on its behalf.

(2) The Council may terminate a State agreement after consultation with the State Historic Preservation Officer and the Secretary.

(3) A State agreement may be terminated by the State Historic Preservation Officer.

(4) When a State agreement is terminated pursuant to § 800.7(c) (2) and (3), such termination shall have no effect on undertakings for which review under the agreement was complete or in progress at the time the termination occurred.

§ 800.8 Documentation requirements.

(a) *Finding of no adverse effect.* The purpose of this documentation is to provide sufficient information to explain how the Agency Official reached the finding of no adverse effect. The required documentation is as follows:

(1) A description of the undertaking, including photographs, maps, and drawings, as necessary;

(2) A description of historic properties that may be affected by the undertaking;

(3) A description of the efforts used to identify historic properties;

(4) A statement of how and why the criteria of adverse effect were found inapplicable; and

(5) The views of the State Historic Preservation Officer, affected local governments, Indian tribes, Federal agencies, and the public, if any were provided, as well as a description of the means employed to solicit those views.

(b) *Finding of adverse effect.* The required documentation is as follows:

(1) A description of the undertaking, including photographs, maps, and drawings, as necessary;

(2) A description of the efforts to identify historic properties;

(3) A description of the affected historic properties, using materials already compiled during the evaluation of significance, as appropriate; and

(4) A description of the undertaking's effects on historic properties.

(c) *Memorandum of Agreement.* When a memorandum is submitted for review in accordance with § 800.6(a)(1), the documentation, in addition to that specified in § 800.8(b), shall also include a description and evaluation of any proposed mitigation measures or alternatives that were considered to deal with the undertaking's effects and a summary of the views of the State Historic Preservation Officer and any interested persons.

(d) *Requests for comment when there is no agreement.* The purpose of this documentation is to provide the Council with sufficient information to make an independent review of the undertaking's effects on historic properties as the basis for informed and meaningful comments to the Agency Official. The required documentation is as follows:

(1) A description of the undertaking, with photographs, maps, and drawings, as necessary;

(2) A description of the efforts to identify historic properties;

(3) A description of the affected historic properties, with information on the significant characteristics of each property;

(4) A description of the effects of the undertaking on historic properties and the basis for the determinations;

(5) A description and evaluation of any alternatives or mitigation measures that the Agency Official proposes for dealing with the undertaking's effects;

(6) A description of any alternatives or mitigation measures that were considered but not chosen and the reasons for their rejection;

(7) Documentation of consultation with the State Historic Preservation Officer regarding the identification and

evaluation of historic properties, assessment of effect, and any consideration of alternatives or mitigation measures;

(8) A description of the Agency Official's efforts to obtain and consider the views of affected local governments, Indian tribes, and other interested persons;

(9) The planning and approval schedule for the undertaking; and

(10) Copies or summaries of any written views submitted to the Agency Official concerning the effects of the undertaking on historic properties and alternatives to reduce or avoid those effects.

§800.9 Criteria of effect and adverse effect.

(a) An undertaking has an effect on a historic property when the undertaking may alter characteristics of the property that may qualify the property for inclusion in the National Register. For the purpose of determining effect, alteration to features of a property's location, setting, or use may be relevant depending on a property's significant characteristics and should be considered.

(b) An undertaking is considered to have an adverse effect when the effect on a historic property may diminish the integrity of the property's location, design, setting, materials, workmanship, feeling, or association. Adverse effects on historic properties include, but are not limited to:

(1) Physical destruction, damage, or alteration of all or part of the property;

(2) Isolation of the property from or alteration of the character of the property's setting when that character contributes to the property's qualification for the National Register;

(3) Introduction of visual, audible, or atmospheric elements that are out of character with the property or alter its setting;

(4) Neglect of a property resulting in its deterioration or destruction; and

(5) Transfer, lease, or sale of the property.

(c) Effects of an undertaking that would otherwise be found to be adverse may be considered as being not adverse for the purpose of these regulations:

(1) When the historic property is of value only for its potential contribution to archeological, historical, or architectural research, and when such value can be substantially preserved through the conduct of appropriate research, and such research is conducted in accordance with applicable professional standards and guidelines;

(2) When the undertaking is limited to the rehabilitation of buildings and structures and is conducted in a manner that preserves the historical and architectural value of affected historic property through conformance with the Secretary's ''Standards for Rehabilitation and Guidelines for Rehabilitating Historic Buildings'', or

(3) When the undertaking is limited to the transfer, lease, or sale of a historic property, and adequate restrictions or conditions are included to ensure preservation of the property's significant historic features.

Subpart C—Special Provisions

§800.10 Protecting National Historic Landmarks.

Section 110(f) of the Act requires that the Agency Official, to the maximum extent possible, undertake such planning and actions as may be necessary to minimize harm to any National Historic Landmark that may be directly and adversely affected by an undertaking. When commenting on such undertakings, the Council shall use the process set forth in §§800.4 through 800.6 and give special consideration to protecting National Historic Landmarks as follows:

(a) Any consultation conducted under §800.5(e) shall include the Council;

(b) The Council may request the Secretary under section 213 of the Act to provide a report to the Council detailing the significance of the property, describing the effects of the undertaking on the property, and recommending measures to avoid, minimize, or mitigate adverse effects; and

(c) The Council shall report its comments, including Memoranda of Agreement, to the President, the Congress, the Secretary, and the head of the

agency responsible for the undertaking.

[51 FR 31118, Sept. 2, 1986; 52 FR 25376, July 7, 1987]

§ 800.11 Properties discovered during implementation of an undertaking.

(a) *Planning for discoveries.* When the Agency Official's identification efforts in accordance with § 800.4 indicate that historic properties are likely to be discovered during implementation of an undertaking, the Agency Official is encouraged to develop a plan for the treatment of such properties if discovered and include this plan in any documentation prepared to comply with § 800.5.

(b) *Federal agency responsibilities.* (1) When an Agency Official has completed the section 106 process and prepared a plan in accordance with § 800.11(a), the Agency Official shall satisfy the requirements of section 106 concerning properties discovered during implementation of an undertaking by following the plan.

(2) When an Agency Official has completed the section 106 process without preparing a plan in accordance with § 800.11(a) and finds after beginning to carry out the undertaking that the undertaking will affect a previously unidentified property that may be eligible for inclusion in the National Register, or affect a known historic property in an unanticipated manner, the Agency Official shall afford the Council an opportunity to comment by choosing one of the following courses of action:

(i) Comply with § 800.6;

(ii) Develop and implement actions that take into account the effects of the undertaking on the property to the extent feasible and the comments from the State Historic Preservation Officer and the Council pursuant to § 800.11(c); or

(iii) If the property is principally of archeological value and subject to the requirements of the Archeological and Historic Preservation Act, 16 U.S.C. 469(a)–(c), comply with that Act and implementing regulations instead of these regulations.

(3) Section 106 and these regulations do not require the Agency Official to stop work on the undertaking. However, depending on the nature of the property and the undertaking's apparent effects on it, the Agency Official should make reasonable efforts to avoid or minimize harm to the property until the requirements of this section are met.

(c) *Council comments.* (1) When comments are requested pursuant to § 800.11(b)(2)(i), the Council will provide its comments in a time consistent with the Agency Official's schedule, regardless of longer time periods allowed by these regulations for Council review.

(2) When an Agency Official elects to comply with § 800.11(b)(2)(ii), the Agency Official shall notify the State Historic Preservation Officer and the Council at the earliest possible time, describe the actions proposed to take effects into account, and request the Council's comments. The Council shall provide interim comments to the Agency Official within 48 hours of the request and final comments to the Agency Official within 30 days of the request.

(3) When an Agency Official complies with § 800.11(b)(2)(iii), the Agency Official shall provide the State Historic Preservation Officer an opportunity to comment on the work undertaken and provide the Council with a report on the work after it is undertaken.

(d) *Other considerations.* (1) When a newly discovered property has not previously been included in or determined eligible for the National Register, the Agency Official may assume the property to be eligible for purposes of section 106.

(2) When a discovery occurs and compliance with this section is necessary on lands under the jurisdiction of an Indian tribe, the Agency Official shall consult with the Indian tribe during implementation of this section's requirements.

§ 800.12 Emergency undertakings.

(a) When a Federal agency head proposes an emergency action and elects to waive historic preservation responsibilities in accordance with 36 CFR 78.3, the Agency Official may comply with the requirements of 36 CFR part 78 in lieu of these regulations. An Agency Official should develop plans

for taking historic properties into account during emergency operations. At the request of the Agency Official, the Council will assist in the development of such plans.

(b) When an Agency Official proposes an emergency undertaking as an essential and immediate response to a disaster declared by the President or the appropriate Governor, and §800.12(a) does not apply, the Agency Official may satisfy section 106 by notifying the Council and the appropriate State Historic Preservation Officer of the emergency undertaking and affording them an opportunity to comment within seven days if the Agency Official considers that circumstances permit.

(c) For the purposes of activities assisted under title I of the Housing and Community Development Act of 1974, as amended, §800.12(b) also applies to an imminent threat to public health or safety as a result of natural disaster or emergency declared by a local government's chief executive officer or legislative body, provided that if the Council or the State Historic Preservation Officer objects, the Agency Official shall comply with §§800.4 through 800.6.

(d) This section does not apply to undertakings that will not be implemented within 30 days after the disaster or emergency. Such undertakings shall be reviewed in accordance with §§800.4 through 800.6.

[51 FR 31118, Sept. 2, 1986; 52 FR 25376, July 7, 1987]

§800.13 Programmatic Agreements.

(a) *Application.* An Agency Official may elect to fulfill an agency's section 106 responsibilities for a particular program, a large or complex project, or a class of undertakings that would otherwise require numerous individual requests for comments through a Programmatic Agreement. Programmatic Agreements are appropriate for programs or projects:

(1) When effects on historic properties are similar and repetitive or are multi-State or national in scope;

(2) When effects on historic properties cannot be fully determined prior to approval;

(3) When non-Federal parties are delegated major decisionmaking responsibilities;

(4) That involve development of regional or land-management plans; or

(5) That involve routine management activities at Federal installations.

(b) *Consultation process.* The Council and the Agency Official shall consult to develop a Programmatic Agreement. When a particular State is affected, the appropriate State Historic Preservation Officer shall be a consulting party. When the agreement involves issues national in scope, the President of the National Conference of State Historic Preservation Officers or a designated representative shall be invited to be a consulting party by the Council. The Council and the Agency Official may agree to invite other Federal agencies or others to be consulting parties or to participate, as appropriate.

(c) *Public involvement.* The Council, with the assistance of the Agency Official, shall arrange for public notice and involvement appropriate to the subject matter and the scope of the program. Views from affected units of State and local government, Indian tribes, industries, and organizations will be invited.

(d) *Execution of the Programmatic Agreement.* After consideration of any comments received and reaching final agreement, the Council and the Agency Official shall execute the agreement. Other consulting parties may sign the Programmatic Agreement as appropriate.

(e) *Effect of the Programmatic Agreement.* An approved Programmatic Agreement satisfies the Agency's section 106 responsibilities for all individual undertakings carried out in accordance with the agreement until it expires or is terminated.

(f) *Notice.* The Council shall publish notice of an approved Programmatic Agreement in the FEDERAL REGISTER and make copies readily available to the public.

(g) *Failure to carry out a Programmatic Agreement.* If the terms of a Programmatic Agreement are not carried out or if such an agreement is terminated, the Agency Official shall comply with §§800.4 through 800.6 with regard to individual undertakings covered by the agreement.

§ 800.14 Coordination with other authorities.

To the extent feasible, Agency Officials, State Historic Preservation Officers, and the Council should encourage coordination of implementation of these regulations with the steps taken to satisfy other historic preservation and environmental authorities by:

(a) Integrating compliance with these regulations with the processes of environmental review carried out pursuant to the National Environmental Policy Act, and coordinating any studies needed to comply with these regulations with studies of related natural and social aspects;

(b) Designing determinations and agreements to satisfy the terms not only of section 106 and these regulations, but also of the requirements of such other historic preservation authorities as the Archeological and Historic Preservation Act, the Archeological Resources Protection Act, section 110 of the National Historic Preservation Act, and section 4(f) of the Department of Transportation Act, as applicable, so that a single document can be used for the purposes of all such authorities;

(c) Designing and executing studies, surveys, and other information-gathering activities for planning and undertaking so that the resulting information and data is adequate to meet the requirements of all applicable Federal historic preservation authorities; and

(d) Using established agency public involvement processes to elicit the views of the concerned public with regard to an undertaking and its effects on historic properties.

§ 800.15 Counterpart regulations.

In consultation with the Council, agencies may develop counterpart regulations to carry out the section 106 process. When concurred in by the Council, such counterpart regulations shall stand in place of these regulations for the purposes of the agency's compliance with section 106.

PART 801—HISTORIC PRESERVATION REQUIREMENTS OF THE URBAN DEVELOPMENT ACTION GRANT PROGRAM

Sec.

801.1 Purpose and authorities.
801.2 Definitions.
801.3 Applicant responsibilities.
801.4 Council comments.
801.5 State historic preservation officer responsibilities.
801.6 Coordination with requirements under the National Environmental Policy Act (42 U.S.C. 4321 *et seq.*).
801.7 Information requirements.
801.8 Public participation.

APPENDIX 1 TO PART 801—IDENTIFICATION OF PROPERTIES: GENERAL

APPENDIX 2 TO PART 801—SPECIAL PROCEDURES FOR IDENTIFICATION AND CONSIDERATION OF ARCHEOLOGICAL PROPERTIES IN AN URBAN CONTEXT

AUTHORITY: Pub. L. 89–665, 80 Stat. 915 (16 U.S.C. 470); Pub. L. 94–422, 90 Stat. 1320 (16 U.S.C. 470(i)); Pub. L. 96–399, 94 Stat. 1619 (42 U.S.C. 5320).

SOURCE: 46 FR 42428, Aug. 20, 1981, unless otherwise noted.

§ 801.1 Purpose and authorities.

(a) These regulations are required by section 110(c) of the Housing and Community Development Act of 1980 (HCDA) (42 U.S.C. 5320) and apply only to projects proposed to be funded by the Department of Housing and Urban Development (HUD) under the Urban Development Action Grant (UDAG) Program authorized by title I of the Housing and Community Development Act of 1974, as amended (42 U.S.C. 5301). These regulations establish an expedited process for obtaining the comments of the Council specifically for the UDAG program and, except as specifically provided, substitute for the Council's regulations for the ''Protection of Historic and Cultural Properties'' (36 CFR part 800).

(b) Section 110(c) of the HCDA of 1980 requires UDAG applicants to: (1) Identify all properties, if any, which are included in the National Register of Historic Places and which will be affected

by the project for which the application is made; (2) identify all other properties, if any, which will be affected by such project and which, as determined by the applicant, may meet the Criteria established by the Secretary of the Interior for inclusion in the National Register (36 CFR 60.6); and (3) provide a description of the effect, as determined by the applicant, of the project on properties identified pursuant to (1) and (2). If the applicant determines that such properties are affected, the Act requires that the information developed by the applicant must be forwarded to the appropriate State Historic Preservation Officer (SHPO) for review and to the Secretary of the Interior for a determination as to whether the affected properties are eligible for inclusion in the National Register.

(c) Section 106 of the National Historic Preservation Act of 1966, as amended (16 U.S.C. 470), requires the head of any Federal agency with jurisdiction over a Federal, federally assisted or federally licensed undertaking that affects a property included in or eligible for inclusion in the National Register of Historic Places to take into account the effect of the undertaking on such property and afford the Council a reasonable opportunity to comment. Under the UDAG program, applicants assume the status of a Federal agency for purposes of complying with section 106.

§801.2 Definitions.

The terms defined in 36 CFR 800.2 shall be used in conjunction with this regulation. Furthermore, as used in these regulations:

(a) *Urban Development Action Grant (UDAG) Program* means the program of the Department of Housing and Urban Development (HUD) authorized by title I of the Housing and Community Development Act (HCDA) of 1977 (42 U.S.C. 5318) to assist revitalization efforts in distressed cities and urban counties which require increased public and private investment.

(b) *Applicant* means cities and urban counties or Pocket of Poverty Communities which meet the criteria at 24 CFR 570.453. Except as specifically provided below, applicants, rather than the Secretary of HUD, must comply with these regulations.

(c) *Project* means a commercial, industrial, and/or neighborhood project supported by the UDAG program of the Department of HUD, as defined in 24 CFR 570.451(g). A project includes the group of integrally related public and private activities described in the grant application which are to be carried out to meet the objectives of the action grant program and consists of all action grant funded activities together with all non-action grant funded activities. A project is an *undertaking* as defined in 36 CFR 800.2(c).

(d) *State Historic Preservation Officer Review Period* is a 45 day period provided to the appropriate State Historic Preservation Officer by section 110(c) of the Housing and Community Development Act (HCDA) of 1980 for comment on the formal submission by the applicant of data on properties listed in the National Register or which may meet the Criteria and which will be affected by the proposed UDAG project. This period does not include any period during which the applicant seeks information from the State Historic Preservation Officer to assist the applicant in identifying properties, determining whether a property meets the Criteria for listing in the National Register of Historic Places and determining whether such property is affected by the project.

(e) *Secretary of the Interior Determination Period* is a 45 day period provided by section 110(c) of the HCDA of 1980 for a determination as to whether the identified properties are eligible for inclusion in the National Register.

§801.3 Applicant responsibilities.

As early as possible before the applicant makes a final decision concerning a project and in any event prior to taking any action that would foreclose alternatives or the Council's ability to comment, the applicant should take the following steps to comply with the requirements of section 106 of the National Historic Preservation Act and section 110 of the HCDA of 1980.

In order to facilitate the commenting process the applicant should forward to

the Council information on the proposed project at the earliest practicable time if it appears that National Register properties or properties which meet the Criteria for inclusion will be affected. This will allow the Council to assist the applicant in expeditiously meeting its historic preservation requirements and facilitate the development of the Council's comments.

(a) *Information required.* It is the primary responsibility of the applicant requesting Council comments to conduct the appropriate studies and to provide the information necessary for a review of the effect a proposed project may have on a National Register property or a property which meets the Criteria, as well as the information necessary for adequate consideration of modifications or alterations to the proposed project that could avoid, mitigate, or minimize any adverse effects. It is the responsibility of the applicant to provide the information specified in § 801.7, to make an informed and reasonable evaluation of whether a property meets the National Register Criteria (36 CFR 60.6) and to determine the effect of a proposed undertaking on a National Register property or property which meets the Criteria.

(b) *Identification of properties.* Section 110 of the HCDA of 1980 makes UDAG applicants responsible for the identification of National Register properties and properties which may meet the Criteria for listing in the National Register that may be affected by the project. An appendix to these regulations sets forth guidance to applicants in meeting their identification responsibilities but does not set a fixed or inflexible standard for such efforts. Meeting this responsibility requires the applicant to make an earnest effort to identify and evaluate potentially affected historic properties by:

(1) Consulting the National Register of Historic Places to determine whether the project's impact area includes such properties;

(2) Obtaining, prior to initiating the State Historic Preservation Officer Review Period, relevant information that the State Historic Preservation Officer may have available concerning historic properties, if any are known, in the project's impact area;

(3) Utilizing local plans, surveys, and inventories of historic properties prepared by the locality or a recognized State or local historic authority;

(4) Utilizing other sources of information or advice the applicant deems appropriate;

(5) Conducting an on-the-ground inspection of the project's impact area by qualified personnel to identify properties which may meet the Criteria for evaluation taking into consideration the views of the State Historic Preservation Officer as to the need for and methodology of such inspections;

(6) Applying the Department of the Interior Criteria for Evaluation (36 CFR 60.6) to properties within the project's impact area.

(c) *Evaluation of effect.* Applicants are required by section 110(a) of the HCDA of 1980 to include in their applications a description of the effect of a proposed UDAG project on any National Register property and or any property which may meet the Criteria.

(1) *Criteria of Effect and Adverse Effect.* The following criteria, similar to those set forth in 36 CFR 800.3, shall be used to determine whether a project has an effect or an adverse effect.

(i) *Criteria of effect.* The effect of a project on a National Register or eligible property is evaluated in the context of the historical, architectural, archeological, or cultural significance possessed by the property. A project shall be considered to have an effect whenever any condition of the project causes or may cause any change, beneficial or adverse, in the quality of the historical, architectural, archeological, or cultural characteristics that qualify the property to meet the Criteria of the National Register. An effect occurs when a project changes the integrity of location, design, setting, materials, workmanship, feeling or association of the property that contributes to its significance in accordance with the National Register Criteria. An effect may be direct or indirect. Direct effects are caused by the project and occur at the same time and place. Indirect effects include those caused by the undertaking that are later in time or farther removed in distance, but are still reasonably foreseeable. Such effects involve development of the project site around

historic properties so as to affect the access to, use of, or significance of those properties.

(ii) *Criteria of adverse effect.* Adverse effects on National Register properties or properties which meet the Criteria may occur under conditions which include but are not limited to:

(A) Destruction or alteration of all or part of a property;

(B) Isolation from or alteration of the property's surrounding environment;

(C) Introduction of visual, audible, or atmospheric elements that are out of character with the property or alter its setting;

(D) Neglect of a property resulting in its deterioration or destruction;

(iii) *Special considerations.* If rehabilitation is a project activity, such components of the project may be considered to have no adverse effect and need not be referred to the Council if they are undertaken in accordance with the Secretary of the Interior's Standards for Historic Preservation Projects (U.S. Department of the Interior, Heritage Conservation and Recreation Service, Washington, DC, 1979) and the State Historic Preservation Officer concurs in the proposed activity. Additionally, the following types of project components or elements will be considered to not normally adversely affect properties listed in the National Register or which meet the Criteria.

(A) Insulation (except for the use of granular or liquid injected foam insulation in exterior walls or other vertical surfaces);

(B) Caulking;

(C) Weatherstripping;

(D) Replacement of Heating, Ventilating and Air Conditioning (HVAC) equipment, provided that such equipment is not historic and that replacement equipment is screened from public view and that the State Historic Preservation Officer and the applicant agree the equipment will not affect those qualities of the property which qualify it to meet the 36 CFR 60.6 Criteria;

(E) In-kind refenestration (for example, replacement of deteriorated windows of a similar configuration, color and material);

(F) Lowering of ceilings, provided the ceilings will not be visible from outside of the building or from an interior public space and that the State Historic Preservation Officer and the applicant agree it will not affect a quality which qualified the building to meet the 36 CFR 60.6 Criteria;

(G) Replacement in-kind of substantially deteriorated material, provided that the State Historic Preservation Officer and the applicant agree;

(H) Installation of machinery, equipment, furnishings, fixtures, etc., in the interior of existing buildings, provided that the State Historic Preservation Officer and the applicant agree such installations will not affect a quality which qualified the building to meet the 36 CFR 60.6 Criteria.

(I) Site improvements such as sidewalk paving and landscaping, provided that the State Historic Preservation Officer and the applicant agree that the site improvement will not affect those qualities of the property which qualify it to meet the 36 CFR 60.6 Criteria.

(iv) *Special considerations for archeological sites.* Under certain conditions, alteration of land containing archeological resources in the project area may have no adverse effect on those resources. Procedures for determining whether such conditions exist were published by the Council in the FEDERAL REGISTER on November 26, 1980 (45 FR 78808), as part X of the ''Executive Director's Procedures for Review of Proposals for Treatment of Archeological Properties.'' Because the identification of archeological sites in an urban context, and consideration of appropriate treatment methods, present special problems, further guidance is provided in Appendix 2.

(2) *Determinations of Effect.* Prior to submitting an application to HUD, the applicant shall apply the Criteria of Effect and Adverse Effect to all properties which are listed in the National Register or which may meet the Criteria in the area of the project's potential environmental impact. The determination of the Secretary of the Interior shall be final with respect to properties which are eligible for listing in the National Register. The Council will not comment on affected properties

which are not either listed in or eligible for listing in the National Register. In order to facilitate the process, information to be requested from the State Historic Preservation Officer under § 801.3(b)(2) should include advice on applying the Criteria of Effect and Adverse Effect provided that this period shall not be included in the 45 day State Historic Preservation Officer Review Period. Special attention should be paid to indirect effects, such as changes in land use, traffic patterns, street activity, population density and growth rate. While some aspects of a project may have little potential to adversely affect the significant qualities of a historic property, other project components may meet the Criteria of Effect and Adverse Effect. If any aspect of the project results in an effect determination, further evaluation of the effect shall be undertaken in accordance with these regulations. The resulting determination regarding the effect shall be included in the application.

(i) *No effect.* If the applicant determines that the project will have no effect on any National Register property and/or property which meets the Criteria, the project requires no further review by the Council unless a timely objection is made by the Executive Director. An objection may be made by the Executive Director at any time during the UDAG application process prior to the expiration of the period for receiving objections to HUD's release of funds as specified in 24 CFR 58.31. The manner in which the Executive Director shall make an objection is set forth in § 801.4(a).

(ii) *Determinations of no adverse effect.* If the applicant finds there is an effect on the property but it is not adverse, the applicant after receiving the comments of the State Historic Preservation Officer during the State Historic Preservation Officer Review Period shall forward adequate documentation (see § 801.7(a)) of the Determination, including the written comments of the State Historic Preservation Officer, if available, to the Executive Director for review in accordance with § 801.4.

(iii) *Adverse effect determination.* If the applicant finds the effect to be adverse or if the Executive Director objects to an applicant's no adverse effect determination pursuant to § 801.4(a), the applicant shall proceed with the consultation process in accordance with § 801.4(b).

§ 801.4 Council comments.

The following subsections specify how the Council will respond to an applicant's request for the Council's comments required to satisfy the applicant's responsibilities under section 106 of the Act and section 110 of the HCDA of 1980. When appropriate, an applicant may waive the Council time periods specified in these regulations.

(a) *Executive Director's Objection to No Effect Determination.* If the Executive Director has reason to question an applicant's determination of no effect, he shall notify the applicant and HUD. If the Executive Director does not object within 15 days of such notification, the project may proceed. If the Executive Director objects, he shall specify whether or not the project will have an adverse effect on National Register property and/or property which meets the Criteria. Normally, the Executive Director will object to a determination of no effect when the record does not support the applicant's determination (see § 801.7(a)). The applicant must then comply with the provisions of subsection (b) if the Executive Director determines that the project will have no adverse effect or subsection (c) if the Executive Director has determined that the project will have an adverse effect.

(b) *Response to Determinations of No Adverse Effect.* (1) Upon receipt of a Determination of No Adverse Effect from an applicant, the Executive Director will review the Determination and supporting documentation required by § 801.7(a). Failure to provide the required information at the time the applicant requests Council comments will delay the process. The Executive Director will respond to the applicant within 15 days after receipt of the information required in § 801.7(a). Unless the Executive Director objects to the Determination within 15 days after receipt, the applicant will be considered to have satisfied its responsibilities under section 106 of the Act and these regulations and no further Council review is required.

(2) If the Executive Director objects to a Determination of No Adverse Effect, the consultation process pursuant to § 801.4(c) shall be initiated.

(c) *Consultation process.* If any aspect of the project is found to have adverse effects on National Register property or property which has been determined by the applicant or the Secretary of the Interior to meet the Criteria, the applicant, the State Historic Preservation Officer and the Executive Director shall consult to consider feasible and prudent alternatives to the project that could avoid, mitigate, or minimize the adverse effect on the affected property.

(1) *Parties.* The applicant, the State Historic Preservation Officer and the Executive Director shall be the consulting parties. The Department of HUD, other representatives of national, State, or local units of government, other parties in interest, and public and private organizations, may be invited by the consulting parties to participate in the consultation process.

(2) *Timing.* The consulting parties shall have a total of 45 days from the receipt by the Executive Director of the information required in § 801.7(a) to agree upon feasible and prudent alternatives to avoid, mitigate, or minimize any adverse effects of the project. Failure of an applicant to provide the information required in § 801.7(b) will delay the beginning of the time period specified above.

(3) *Information requirements.* The applicant shall provide copies of the information required in § 801.7(b) to the consulting parties at the initiation of the consultation process and make it readily available for public inspection.

(4) *Public meeting.* An onsite inspection and a Public Information Meeting may be held in accordance with the provisions of 36 CFR 800.6(b). Public hearings or meetings conducted by the applicant in the preparation of the application may, as specified below, substitute for such Public Information Meetings. Upon request of the applicant, the Executive Director may find that such public meetings have been adequate to consider the effect of the project on National Register properties or properties which meet the Criteria, and no further Public Information Meeting is required.

(5) *Consideration of alternatives.* During the consultation period, the consulting parties shall, in accordance with the policies set forth in 36 CFR 800.6(b) (4) and (5), review the proposed project to determine whether there are prudent and feasible alternatives to avoid or satisfactorily mitigate adverse effect. If they agree on such alternatives, they shall execute a Memorandum of Agreement in accordance with § 801.4(c) specifying how the undertaking will proceed to avoid or mitigate the adverse effect.

(6) *Acceptance of adverse effect.* If the consulting parties determine that there are no feasible and prudent alternatives that could avoid or satisfactorily mitigate the adverse effects and agree that it is in the public interest to proceed with the proposed project they shall execute a Memorandum of Agreement in accordance with § 801.4(c) acknowledging this determination and specifying any recording, salvage, or other measures associated with acceptance of the adverse effects that shall be taken before the project proceeds.

(7) *Failure to agree.* Upon the failure of the consulting parties to agree upon the terms for a Memorandum of Agreement within the specified time period, or upon notice of a failure to agree by any consulting party to the Executive Director, the Executive Director within 15 days shall recommend to the Chairman whether the matter should be scheduled for consideration at a Council meeting. If the Executive Director recommends that the Council not consider the matter, he shall simultaneously notify all Council members and provide them copies of the preliminary case report and the recommendation to the Chairman. The applicant and the State Historic Preservation Officer shall be notified in writing of the Executive Director's recommendation.

(d) *Memorandum of Agreement*—(1) *Preparation of Memorandum of Agreement.* It shall be the responsibility of the Executive Director to prepare each Memorandum of Agreement required under this part. As appropriate, other parties may be invited by the consulting parties to be signatories to the

Agreement or otherwise indicate their concurrence with the Agreement. In order to facilitate the process, the applicant may provide the Executive Director a draft for a Memorandum of Agreement. At the applicant's option, such draft may be prepared at the time the applicant makes its determinations that properties listed in the National Register or which may meet the Criteria for listing in the National Register may be adversely affected. The applicant must provide the State Historic Preservation Officer an opportunity to concur in or comment on its draft Agreement.

(2) *Review of Memorandum of Agreement.* Upon receipt of an executed Memorandum of Agreement, the Chairman shall institute a 15 day review period. Unless the Chairman notifies the applicant that the matter has been placed on the agenda for consideration at a Council meeting, the Agreement shall become final when ratified by the Chairman or upon the expiration of the 15 day review period with no action taken. Copies will be provided to signatories. A copy of the Memorandum of Agreement should be included in any Environmental Assessment or Environmental Impact Statement prepared pursuant to the National Environmental Policy Act.

(3) *Effect of Memorandum of Agreement.* (i) Agreements duly executed in accordance with these regulations shall constitute the comments of the Council and shall evidence satisfaction of the applicant's responsibilities for the proposed project under section 106 of the Act and these regulations.

(ii) If the Council has commented on an application that is not approved by HUD and a subsequent UDAG application is made for the same project, the project need not be referred to the Council again unless there is a significant amendment to the project which would alter the effect of the project on previously considered properties or result in effects on additional National Register properties or properties which meet the Criteria.

(iii) Failure to carry out the terms of a Memorandum of Agreement requires that the applicant again request the Council's comments in accordance with these regulations. In such instances, until the Council issues its comments under these regulations the applicant shall not take or sanction any action or make any irreversible or irretrievable commitment that could result in an adverse effect with respect to National Register properties or properties which are eligible for inclusion in the National Register covered by the Agreement or that would foreclose the Council's consideration of modifications or alternatives to the proposed project that could avoid or mitigate the adverse effect.

(4) *Amendment of a Memorandum of Agreement.* Amendments to the Agreement may be made as specified in 36 CFR 800.6(c)(4).

(5) *Report on Memorandum of Agreement.* Within 90 days after carrying out the terms of the Agreement, the applicant shall report to all signatories on the actions taken.

(e) *Council Meetings.* Council meetings to consider a project will be conducted in accordance with the policies set forth in 36 CFR 800.6(d).

(1) *Response to recommendation concerning consideration at Council meeting.* Upon receipt of a recommendation from the Executive Director concerning consideration of a proposed project at a Council meeting, the Chairman shall determine whether or not the project will be considered. The Chairman shall make a decision within 15 days of receipt of the recommendation of the Executive Director. In reaching a decision the Chairman shall consider any comments from Council members. If three members of the Council object within the 15 day period to the Executive Director's recommendation, the project shall be scheduled for consideration at a Council or panel meeting. Unless the matter is scheduled for consideration by the Council the Chairman shall notify the applicant, the Department of HUD, the State Historic Preservation Officer and other parties known to be interested of the decision not to consider the matter. Such notice shall be evidence of satisfaction of the applicant's responsibilities for the proposed project under section 106 of the Act and these regulations.

(2) *Decision to consider the project.* When the Council will consider a proposed project at a meeting, the Chairman shall either designate five members as a panel to hear the matter on behalf of the full Council or schedule the matter for consideration by the full Council. In either case, the meeting shall take place within 30 days of the Chairman's decision to consider the project, unless the applicant agrees to a longer time.

(i) A panel shall consist of three non-Federal members, one as Chairman, and two Federal members. The Department of HUD may not be a member of such panel.

(ii) Prior to any panel or full Council consideration of a matter, the Chairman will notify the applicant and the State Historic Preservation Officer and other interested parties of the date on which the project will be considered. The Executive Director, the applicant, the Department of HUD, and the State Historic Preservation Officer shall prepare reports in accordance with § 801.7(b). Reports from the applicant and the State Historic Preservation Officer must be received by the Executive Director at least 7 days before any meeting.

(3) *Notice of Council meetings.* At least 7 days notice of all meetings held pursuant to this section shall be given by publication in the FEDERAL REGISTER. The Council shall provide a copy of the notice by mail to the applicant, the State Historic Preservation Officer, and the Department of Housing and Urban Development. The Council will inform the public of the meeting through appropriate local media.

(4) *Statements to the Council.* An agenda shall provide for oral statements from the Executive Director; the applicant; the Department of HUD; parties in interest; the Secretary of the Interior; the State Historic Preservation Officer; representatives of national, State, or local units of government; and interested public and private organizations and individuals. Parties wishing to make oral remarks should notify the Executive Director at least two days in advance of the meeting. Parties wishing to have their written statements distributed to Council members prior to the meeting should send copies of the statements to the Executive Director at least 5 days in advance.

(5) *Comments of the Council.* The written comments of the Council will be issued within 7 days after a meeting. Comments by a panel shall be considered the comments of the full Council. Comments shall be made to the applicant requesting comment and to the Department of HUD. Immediately after the comments are made to the applicant and the Department of HUD, the comments of the Council will be forwarded to the President and the Congress as a special report under authority of section 202(b) of the Act and a notice of availability will be published in the FEDERAL REGISTER. The comments of the Council shall be made available to the State Historic Preservation Officer, other parties in interest, and the public upon receipt of the comments by the applicant. The applicant should include the comments of the Council in any final Environmental Impact Statement prepared pursuant to the National Environmental Policy Act.

(6) *Action in response to Council comments.* The comments of the Council shall be taken into account in reaching a final decision on the proposed project. When a final decision regarding the proposed project is reached by the applicant and the Department of HUD, they shall submit written reports to the Council describing the actions taken by them and other parties in response to the Council's comments and the impact that such actions will have on the affected National Register properties or properties eligible for inclusion in the National Register. Receipt of this report by the Chairman shall be evidence that the applicant has satisfied its responsibilities for the proposed project under section 106 of the Act and these regulations. The Council may issue a final report to the President and the Congress under authority of section 202(b) of the Act describing the actions taken in response to the Council's comments including recommendations for changes in Federal policy and programs, as appropriate.

(f) *Suspense of Action.* Until the Council issues its comments under these

regulations and during the State Historic Preservation Officer Review Period and the determination period of the Secretary of the Interior, good faith consultation shall preclude the applicant from taking or sanctioning any action or making any irreversible or irretrievable commitment that could result in an adverse effect on a National Register property or property which may meet the Criteria or that would foreclose the consideration of modifications or alternatives to the proposed project that could avoid, mitigate, or minimize such adverse effects. In no case shall UDAG funds be used for physical activities on the project site until the Council comments have been completed. Normal planning and processing of applications short of actual commitment of funds to the project may proceed.

(g) *Lead Agency*. If the project proposed by the applicant involves one or more Federal agencies, they may agree on a single lead agency to meet the requirements of section 106 of the National Historic Preservation Act and section 110 of the Housing and Community Development Act of 1980 and notify the Executive Director. If the applicant is the designated lead agency, these regulations shall be followed. If a Federal agency is designated lead agency, the process in 36 CFR part 800 shall be used.

(h) *Compliance by a Federal Agency*. An applicant may make a finding that it proposes to accept a Federal agency's compliance with section 106 of the Act and 36 CFR 800 where its review of the Federal agency's findings indicate that:

(1) The project is identical with an undertaking reviewed by the Council under 36 CFR part 800; and

(2) The project and its impacts are included within the area of potential environmental impact described by the Federal agency;

The applicant shall notify the State Historic Preservation Officer and the Executive Director of its finding of compliance with section 106 of the Act and 36 CFR part 800 and provide a copy of the Federal agency's document where the finding occurs. Unless the Executive Director objects within 10 days of receipt of such notice the Council need not be afforded further opportunity for comment. If the Executive Director objects to the finding of the applicant, the applicant shall comply with § 801.4.

§ 801.5 State Historic Preservation Officer responsibilities.

(a) The State Historic Preservation Officer shall have standing to participate in the review process established by section 110(c) of the HCDA of 1980 whenever it concerns a project located within the State Historic Preservation Officer's jurisdiction by the following means: providing, within 30 days, information requested by an applicant under § 801.3(b); responding, within 45 days, to submittal of a determination by the applicant under section 110 of the HCDA of 1980 that National Register property or property which meets the Criteria may be affected by the proposed project; participating in a Memorandum of Agreement that the applicant or the Executive Director may prepare under this part; and participating in a panel or full Council meeting that may be held pursuant to these regulations. Pursuant to section 110(c) of the HCDA of 1980, the State Historic Preservation Officer has a maximum period of 45 days in which to formally comment on an applicant's determination that the project may affect a property that is listed in the National Register or which may meet the Criteria for listing in the National Register. This period does not include the time during which the applicant seeks information from the State Historic Preservation Officer for determining whether a property meets the Criteria for listing in the National Register and whether such property is affected by the project.

(b) The failure of a State Historic Preservation Officer to participate in any required steps of the process set forth in this part shall not prohibit the Executive Director and the applicant from concluding the section 106 process, including the execution of a Memorandum of Agreement.

§801.6 Coordination with requirements under the National Environmental Policy Act (42 U.S.C. 4321 et seq.).

The National Historic Preservation Act and the National Environmental Policy Act create separate and distinct responsibilities. The National Historic Preservation Act applies to those aspects of a project which may affect National Register properties and those which are eligible for listing in the National Register. The requirements for the National Environmental Policy Act apply to the effect that the project will have on the human environment. To the extent that the applicant finds it practicable to do so, the requirements of these two statutes should be integrated. Some projects, for reasons other than the effects on historic properties, may require an Environmental Impact Statement (EIS) subject to the time requirements for a draft and final EIS, in which case the applicant may choose to separately relate to the State Historic Preservation Officer, the Department of the Interior, and the Council for purposes of section 110(c) of the HCDA of 1980. In that event, information in the draft EIS should indicate that compliance with section 106 and these regulations is underway and the final EIS should reflect the results of this process. Applicants are directed to 36 CFR 800.9, which describes in detail the manner in which the requirements of these two acts should be integrated and applies to all UDAG applicants under these regulations.

In those instances in which an Environmental Impact Statement will be prepared for the project, the applicant should consider phasing compliance with these procedures and the preparation of the Statement.

§801.7 Information requirements.

(a) *Information To Be Retained by Applicants Determining No Effect.* (1) Recommended Documentation for a Determination of No Effect. Adequate documentation of a Determination of No Effect pursuant to §801.3(c)(2)(i) should include the following:

(i) A general discussion and chronology of the proposed project;

(ii) A description of the proposed project including, as appropriate, photographs, maps, drawings, and specifications;

(iii) A statement that no National Register property or property which meets the Criteria exist in the project area, or a brief statement explaining why the Criteria of Effect (See §801.3(c)) was found inapplicable;

(iv) Evidence of consultation with the State Historic Preservation Officer concerning the Determination of No Effect; and

(v) Evidence of efforts to inform the public concerning the Determination of No Effect.

(2) The information requirements set forth in this section are meant to serve as guidance for applicants in preparing No Effect Determinations. The information should be retained by the applicant, incorporated into any environmental reports or documents prepared concerning the project, and provided to the Executive Director only in the event of an objection to the applicant's determination.

(b) *Reports to the Council.* In order to adequately assess the impact of a proposed project on National Register and eligible properties, it is necessary for the Council to be provided certain information. For the purposes of developing Council comments on UDAG projects the following information is required. Generally, to the extent that relevant portions of a UDAG application meet the requirements set forth below it will be sufficient for the purposes of Council review and comment.

(1) *Documentation for Determination of No Adverse Effect.* Adequate documentation of a Determination of No Adverse Effect pursuant to §801.3(c)(1) should include the following:

(i) A general discussion and chronology of the proposed project;

(ii) A description of the proposed project including, as appropriate, photographs, maps, drawings and specifications;

(iii) A copy of the National Register form or a copy of the Determination of Eligibility documentation for each property that will be affected by the project including a description of each property's physical appearance and significance;

(iv) A brief statement explaining why each of the Criteria of Adverse Effect

(See § 801.3(c)(1)) was found inapplicable;

(v) Written views of the State Historic Preservation Officer concerning the Determination of No Adverse Effect, if available; and,

(vi) An estimate of the cost of the project including the amount of the UDAG grant and a description of any other Federal involvement.

(2) *Preliminary Case Reports.* Preliminary Case Reports should be submitted with a request for comments pursuant to § 801.4(b) and should include the following information:

(i) A general discussion and chronology of the proposed project;

(ii) The status of the project in the HUD approval process:

(iii) The status of the project in the National Environmental Policy Act compliance process and the target date for completion of all the applicant's environmental responsibilities;

(iv) A description of the proposed project including as appropriate, photographs, maps, drawings and specifications;

(v) A copy of the National Register form or a copy of the Determination of Eligibility documentation for each property that will be affected by the project including a description of each property's physical appearance and significance;

(vi) A brief statement explaining why any of the Criteria of Adverse Effect (See § 801.3(c)(1)(b)) apply;

(vii) Written views of the State Historic Preservation Officer concerning the effect on the property, if available;

(viii) The views of Federal agencies, State and local governments, and other groups or individuals when known as obtained through the OMB Circular A–95 process or the environmental review process, public hearings or other applicant processes;

(ix) A description and analysis of alternatives that would avoid the adverse effects;

(x) A description and analysis of alternatives that would mitigate the adverse effects; and,

(xi) An estimate of the cost of the project including the amount of the UDAG grant and a description of any other Federal involvement.

(c) *Reports for Council Meetings.* Consideration of a proposed project by the full Council or a panel pursuant to § 801.4(b) is based upon reports from the Executive Director, the State Historic Preservation Officer and Secretary of the Interior. Requirements for these reports are specified in 36 CFR 800.13(c). Additionally, reports from the applicant and the Department of HUD are required by these regulations. The requirements for these reports consist of the following:

(1) *Report of the Applicant.* The report from the applicant requesting comments shall include a copy of the relevant portions of the UDAG application; a general discussion and chronology of the proposed project; an account of the steps taken to comply with the National Environmental Policy Act (NEPA); any relevant supporting documentation in studies that the applicant has completed; an evaluation of the effect of the project upon the property or properties, with particular reference to the impact on the historical, architectural, archeological, and cultural values; steps taken or proposed by the applicant to avoid or mitigate adverse effects of the project; a thorough discussion of alternate courses of action; and an analysis comparing the advantages resulting from the project with the disadvantages resulting from the adverse effects on National Register or eligible properties.

(2) *Report of the Secretary of Housing and Urban Development.* The report from the Secretary shall include the status of the application in the UDAG approval process, past involvement of the Department with the applicant and the proposed project or land area for the proposed project, and information on how the applicant has met other requirements of the Department for the proposed project.

§ 801.8 Public participation.

(a) The Council encourages maximum public participation in the process established by these regulations. Particularly important, with respect to the UDAG program, is participation by the citizens of neighborhoods directly or indirectly affected by projects, and by groups concerned with historic and cultural preservation.

(b) The applicant, in preparing and following its citizen participation plan called for by 24 CFR 570.456(c)(11)(i)(A), should ensure that adequate provision is made for participation by citizens and organizations having interests in historic preservation and in the historic and cultural values represented in affected neighborhoods. 24 CFR 570.431(c) sets forth criteria for citizen participation plans. These should be carefully considered with specific reference to ensuring that local concerns relevant to historic preservation are fully identified, and that citizens are provided with full and accurate information about each project and its effects on historic properties. The applicant should ensure that potentially concerned citizens and organizations are fully involved in the identification of properties which may meet the National Register Criteria, and that they are fully informed, in a timely manner, of determinations of No Effect, No Adverse Effect, and Adverse Effect, and of the progress of the consultation process. Applicants are referred to 36 CFR 800.15 for Council guidelines for public participation.

(c) The Council welcomes the views of the public, especially those groups which may be affected by the proposed project, during its evaluation of the applicant's determination of effect, and will solicit the participation of the public in Council and panel meetings held to consider projects.

APPENDIX 1 TO PART 801—IDENTIFICATION OF PROPERTIES: GENERAL

A. Introduction

Because of the high probability of locating properties which are listed in the National Register or which meet the Criteria for listing in many older city downtowns, this appendix is designed to serve as guidance for UDAG applicants in identifying such properties. This appendix sets forth guidance for applicants and does not set a fixed or inflexible standard for identification efforts.

B. Role of the State Historic Preservation Officer

In any effort to locate National Register properties or properties which meet the Criteria, the State Historic Preservation Officer is a key source of information and advice. The State Historic Preservation Officer will be of vital assistance to the applicant. The State Historic Preservation Officer can provide information on known properties and on studies which have taken place in and around the project area. Early contact should be made with the State Historic Preservation Officer for recommendations about how to identify historic properties. For UDAG projects, identification of National Register properties and properties which meet the Criteria is the responsibility of the applicant. The extent of the identification effort should be made with the advice of the State Historic Preservation Officer. The State Historic Preservation Officer can be a knowledgeable source of information regarding cases wherein the need for a survey of historic properties is appropriate, recommended type and method of a survey and the boundaries of any such survey. Due consideration should be given to the nature of the project and its impacts, the likelihood of historic properties being affected and the state of existing knowledge regarding historic properties in the area of the project's potential environmental impact.

C. Levels of Identification

1. The area of the project's potential environmental impact consists of two distinct subareas: that which will be disturbed directly (generally the construction site and its immediate environs) and that which will experience indirect effects. Within the area of indirect impact, impacts will be induced as a result of carrying the project out. Historic and cultural properties subject to effect must be identified in both subareas, and the level of effort necessary in each may vary. The level of effort needed is also affected by the stage of planning and the quality of pre-existing information. Obviously, if the area of potential environmental impact has already been fully and intensively studied before project planning begins, there is no need to duplicate this effort. The State Historic Preservation Officer should be contacted for information on previous studies. If the area has not been previously intensively studied, identification efforts generally fall into three levels:

a. *Overview Study:* This level of study is normally conducted as a part of general planning and is useful at an early stage in project formulation. It is designed to obtain a general understanding of an area's historic and cultural properties in consultation with the State Historic Preservation Officer, by:

(1) Assessing the extent to which the area has been previously subjected to study;

(2) Locating properties previously recorded;

(3) Assessing the probability that properties eligible for the National Register will be found if the area is closely inspected, and

(4) Determining the need, if any, for further investigation.

An overview study includes study of pertinent records (local histories, building inventories, architectural reports, archeological survey reports, etc.), and usually some minor on-the-ground inspection.

b. *Identification Study:* An identification study attempts to specifically identify and record all properties in an area that may meet the criteria for listing in the National Register. In conducting the study, the applicant should seek the advice of the State Historic Preservation Officer regarding pertinent background data. A thorough on-the-ground inspection of the subject area by qualified personnel should be undertaken. For very large areas, or areas with uncertain boundaries, such a study may focus on representative sample areas, from which generalizations may be made about the whole.

c. *Definition and Evaluation Study:* If an overview and/or an identification study have indicated the presence or probable presence of properties that may meet the National Register Criteria but has not documented them sufficiently to allow a determination to be made about their eligibility, a definition and evaluation study is necessary. Such a study is directed at specific potentially eligible properties or at areas known or suspected to contain such properties. It includes an intensive on-the-ground inspection and related studies as necessary, conducted by qualified personnel, and provides sufficient information to apply the National Register's ''Criteria for Evaluation'' (36 CFR 60.6).

2. An overview study will normally be needed to provide basic information for planning in the area of potential environmental impact. Unless this study indicates clearly that no further identification efforts are needed (e.g., by demonstrating that the entire area has already been intensively inspected with negative results, or by demonstrating that no potentially significant buildings have ever been built there and there is virtually no potential for archeological resources), and identification study will probably be needed within the area of potential environmental impact. This study may show that there are no potentially eligible properties within the area, or may show that only a few such properties exist and document them sufficiently to permit a determination of eligibility to be made in accordance with 36 CFR part 60. Alternatively, the study may indicate that potentially eligible properties exist in the area, but may not document them to the standards of 36 CFR part 60. Should this occur, a definition and evaluation study is necessary for those properties falling within the project's area of direct effect and for those properties subject to indirect effects. If a property falls within the general area of indirect effect, but no indirect effects are actually anticipated on the property in question, a definition and evaluation study will normally be superfluous.

APPENDIX 2 TO PART 801—SPECIAL PROCEDURES FOR IDENTIFICATION AND CONSIDERATION OF ARCHEOLOGICAL PROPERTIES IN AN URBAN CONTEXT

A. Archeological sites in urban contexts are often difficult to identify and evaluate in advance of construction because they are sealed beneath modern buildings and structures. Prehistoric and historic sites within cities may be important both to science and to an understanding of each city's history, however, and should be considered in project planning. Special methods can be used to ensure effective and efficient consideration and treatment of archeological sites in UDAG projects.

1. If it is not practical to physically determine the existence or nonexistence of archeological sites in the project area, the probability or improbability of their existence can be determined, in most cases, through study of:

a. Information on the pre-urban natural environment, which would have had an effect on the location of prehistoric sites;

b. Information from surrounding areas and general literature concerning the location of prehistoric sites;

c. State and local historic property registers or inventories;

d. Archeological survey reports;

e. Historic maps, atlases, tax records, photographs, and other sources of information on the locations of earlier structures;

f. Information on discoveries of prehistoric or historic material during previous construction, land levelling, or excavation, and

g. Some minor on-the-ground inspection.

2. Should the study of sources such as those listed in section (1)(a) above reveal that the following conditions exist, it should be concluded that a significant likelihood exists that archeological sites which meet the National Register Criteria exist on the project site:

a. Discoveries of prehistoric or historic material remains have been reliably reported on or immediately adjacent to the project site, and these are determined by the State Historic Preservation Officer or other archeological authority to meet the Criteria for the National Register because of their potential value for public interpretation or the study of significant scientific or historical research problems; or

b. Historical or ethnographic data, or discoveries of material, indicate that a property of potential cultural value to the community or some segment of the community (e.g., a cemetery) lies or lay within the project site; or

c. The pre-urbanization environment of the project site would have been conducive to prehistoric occupation, or historic buildings or occupation sites are documented to have existed within the project site in earlier times, and such sites or buildings are determined by the State Historic Preservation Officer or other archeological authority to meet the Criteria of the National Register because of their potential value for public interpretation or the study of significant scientific or historical research questions, and

d. The recent history of the project site has not included extensive and intensive ground disturbance (grading, blasting, cellar digging, etc.) in the location, or extending to the depth at which the remains of significant sites, buildings, or other features would be expected.

B. Where review of sources of information such as those listed in section (1)(a) above reveals no significant likelihood that archeological resources which meet the National Register Criteria exist on the project site, no further review is required with respect to archeology provided the State Historic Preservation Officer concurs.

C. Where review of sources of information such as those listed in section (1)(a) above, reveals that archeological resources which meet the National Register Criteria are likely to exist on the project site, but these resources are so deeply buried that the project will not intrude upon them, or they are in a portion of the project site that will not be disturbed, a determination of ''No Effect'' is appropriate in accordance with §801.3(c)(2)(i).

D. Where review of sources of information such as those listed in section (1)(a) above, reveals that archeological resources which meet the Criteria exist or are likely to exist on the project site, and that the project is likely to disturb them, a determination of ''No Adverse Effect'' may be made in accordance with §801.3(c)(2)(ii) if:

1. The applicant and/or developer is committed to fund a professionally supervised and planned pre-construction testing program, and to modification of the project in consultation with the State Historic Preservation Officer to protect or incorporate within the project the archeological resources discovered with a minimum of damage to them, or if:

2. The applicant and/or developer is committed to fund a professionally supervised and planned archeological salvage program, coordinated with site clearing and construction, following the standards of the Secretary of the Interior issued pursuant to the Archeological and Historic Preservation Act (16 U.S.C. 469) and the applicant finds that this program negates the adverse effect, in accordance with the standards set forth in section X of the Council's ''Supplementary Guidance for Review of Proposals for Treatment of Archeological Properties'' (45 FR 78808).

E. When archeological sites included in the National Register or which meet the Criteria are found to exist on the project site or in the area of the project's environmental impact, and where the project is likely to disturb such resources, and where the adverse effect of such disturbance cannot be negated by archeological salvage, a determination of ''Adverse Effect'' is appropriate in accordance with §801.3(a)(2)(iii).

PART 805—PROCEDURES FOR IMPLEMENTATION OF NATIONAL ENVIRONMENTAL POLICY ACT

Sec.

805.1 Background.
805.2 Purpose.
805.3 Applicability.
805.4 Ensuring environmental documents are actually considered in Council decisionmaking.
805.5 Typical classes of action.
805.6 Interagency cooperation.
805.7 Environmental information.

AUTHORITY: Pub. L. 89–665, 80 Stat. 915 (16 U.S.C. 470), as amended, 84 Stat. 204 (1970), 87 Stat. 139 (1973), 90 Stat. 1320 (1976), 92 Stat. 3467 (1978); E.O. 11593, 3 CFR 1971 Comp., p. 154; President's Memorandum on Environmental Quality and Water Resources Management, July 12, 1978.

SOURCE: 45 FR 4353, Jan. 22, 1980, unless otherwise noted.

§805.1 Background.

(a) The National Environmental Policy Act (NEPA) of 1969 (42 U.S.C. 4321 *et seq.*) establishes national policies and goals for the protection of the environment. Section 102(2) of NEPA contains certain procedural requirements directed toward the attainment of such goals. In particular, all Federal agencies are required to give appropriate consideration to the environmental effects of their proposed actions in their decisionmaking and to prepare detailed environmental statements on recommendations or reports on proposals for legislation and other major Federal actions significantly affecting the quality of the human environment.

(b) Executive Order 11991 of May 24, 1977, directed the Council on Environmental Quality (CEQ) to issue regulations to implement the procedural provisions of NEPA. Accordingly, CEQ issued final NEPA regulations (40 CFR

parts 1500–1508) on November 29, 1978, which are binding on all Federal agencies as of July 30, 1979. These regulations provide that each Federal agency shall as necessary adopt implementing procedures to supplement the regulations. Section 1507.3(b) of the NEPA regulations identifies those sections of the regulations which must be addressed in agency procedures.

§ 805.2 Purpose.

The purpose of this part is to establish Council procedures that supplement the NEPA regulations and provide for the implementation of those provisions identified in § 1507.3(b) of the regulations (40 CFR 1507.3(b)).

§ 805.3 Applicability.

(a) These procedures apply to actions of the full Council and the Council staff acting on behalf of the full Council.

(b) The following actions are covered by these procedures:

(1) Recommendations for legislation.

(2) Regulations implementing section 106 of the National Historic Preservation Act (NHPA).

(3) Procedures implementing other authorities.

(4) Policy recommendations that do not require implementation by another Federal agency.

(c) In accordance with § 1508.4 of the NEPA regulations (40 CFR 1508.4), Council comments on Federal, federally assisted and federally licensed undertakings provided pursuant to section 106 of the NHPA and 36 CFR part 800 are categorically excluded from these procedures. This exclusion is justified because Federal agencies seeking the Council's comments under section 106 have the responsibility for complying with NEPA on the action they propose. The Council's role is advisory and its comments are to be considered in the agency decisionmaking process. Coordination between the section 106 and the NEPA processes is set forth in 36 CFR 800.9.

§ 805.4 Ensuring environmental documents are actually considered in Council decisionmaking.

(a) Section 1505.1 of the NEPA regulations (40 CFR 1505.1) contains requirements to ensure adequate consideration of environmental documents in agency decisionmaking. To implement these requirements the Council shall:

(1) Consider all relevant environmental documents in evaluating proposals for action;

(2) Ensure that all relevant environmental documents, comments, and responses accompany the proposal through internal Council review processes;

(3) Consider only those alternatives encompassed by the range of alternatives discussed in the relevant environmental documents when evaluating proposals for the Council action; and,

(4) Where an environmental impact statement (EIS) has been prepared consider the specific alternative analyzed in the EIS when evaluating the proposal which is the subject of the EIS.

(b) For each of the Council's principal activities covered by NEPA, the following chart identifies the point at which the NEPA process begins, the point at which it ends, and the key officials required to consider environmental documents in their decisionmaking.

Activity	Start of NEPA process	Completion of NEPA process	Key officials required to consider environmental documents
Recommendations for legislation.	During staff formulation of proposal.	Prior to submission to Congress or OMB.	Executive Director and full Council, as appropriate.
Regulations and procedures	Prior to publication of draft regulations in FEDERAL REGISTER.	Prior to publication of final regulations in FEDERAL REGISTER.	Executive Director and full Council as appropriate.
Policy recommendations	During staff formulation of proposal.	Prior to adoption by full Council or Executive Director.	Executive Director and full Council, as appropriate.

§ 805.5 Typical classes of action.

(a) Section 1507.3(c)(2) (40 CFR 1507.3(c)(2)) in conjunction with § 1508.4 requires agencies to establish three typical classes of action for similar

treatment under NEPA: actions normally requiring EIS; actions normally requiring assessments but not necessarily EISs; and actions normally not requiring assessments or EISs. Each of the covered categories of Council actions generally falls within the second category, normally requiring an assessment but not necessarily an EIS.

(b) The Council shall independently determine whether an EIS or an environmental assessment is required where:

(1) A proposal for Council action is not covered by one of the typical classes of action above; or

(2) For actions which are covered, the presence of extraordinary circumstances indicates that some other level of environmental review may be appropriate.

§805.6 Interagency cooperation.

The Council shall consult with appropriate Federal and non-Federal agencies and with interested private persons and organizations when it is considering actions involving such parties and requiring environmental assessments. Where other Federal agencies are involved in the proposed action, the Council shall cooperate in the required environmental assessment and the preparation of necessary environmental documents. Where appropriate as determined by the nature and extent of Council involvement in the proposed action, the Council shall assume the status of lead agency.

§805.7 Environmental information.

Interested persons may contact the Executive Director for information regarding the Council's compliance with NEPA.

PART 810—FREEDOM OF INFORMATION ACT REGULATIONS

Sec.

810.1 Purpose and scope.
810.2 Procedure for requesting information.
810.3 Action on requests.
810.4 Appeals.
810.5 Fees.
810.6 Exemptions.

AUTHORITY: Pub. L. 89–665, 80 Stat. 915 (16 U.S.C. 470) as amended by Pub. L. 91–243, Pub. L. 93–54, Pub. L. 94–422, Pub. L. 94–458, Pub. L. 96–199, Pub. L. 96–244, Pub. L. 96–515.

SOURCE: 46 FR 45334, Sept. 11, 1981, unless otherwise noted.

§810.1 Purpose and scope.

This subpart contains the regulations of the Advisory Council on Historic Preservation implementing the Freedom of Information Act (5 U.S.C. 552). Procedures for obtaining the records covered by the Act are established in these regulations. Persons seeking information or records of the Council are encouraged to consult first with the staff of the Council before filing a formal request under the Act pursuant to these regulations. The informal exchange of information is encouraged wherever possible.

§810.2 Procedure for requesting information.

(a) Requests for information or records not available through informal channels shall be directed to the Administrative Officer, Advisory Council on Historic Preservation, 1522 K Street NW., Washington, DC 20005. All such requests should be clearly marked ''FREEDOM OF INFORMATION REQUEST'' in order to ensure timely processing. Requests that are not so marked will be honored, but will be deemed not to have been received by the Council, for purposes of computing the response time, until the date on which they are identified by a member of the Council staff as being a request pursuant to the Freedom of Information Act.

(b) Requests should describe the records sought in sufficient detail to allow Council staff to locate them with a reasonable amount of effort. Thus, where possible, specific information, including dates, geographic location of cases, and parties involved, should be supplied.

(c) A request for all records falling within a reasonably specific category shall be regarded as conforming to the statutory requirement that records be reasonably described if the records can be identified by any process that is not unreasonably burdensome or disruptive of Council operations.

(d) If a request is denied on the ground that it does not reasonably describe the records sought, the denial shall specify the reasons why the request was denied and shall extend to the requester an opportunity to confer with Council staff in order to reformulate the request in sufficient detail to allow the records to be produced.

§ 810.3 Action on requests.

(a) Once a requested record has been identified, the Administrative Officer shall notify the requester of a date and location where the records may be examined or of the fact that copies are available. The notification shall also advise the requester of any applicable fees under § 810.5.

(b) A reply denying a request shall be in writing, signed by the Administrative Officer and shall include:

(1) Reference to the specific exemption under the Act which authorizes the denial of the record, a brief explanation of how the exemption applies to the record requested, and a brief statement of why a discretionary release is not appropriate; and,

(2) A statement that the denial may be appealed under § 810.4 within 30 days by writing to the Executive Director, Advisory Council on Historic Preservation, 1522 K Street NW., Washington, DC 20005.

(c) The requirements of § 810.3 (b)(1) and (2) do not apply to requests denied on the ground that they are not described with reasonable specificity and consequently cannot be identified.

(d) Within 10 working days from receipt of a request, the Administrative Officer shall determine whether to grant or deny the request and shall promptly notify the requester of the decision. In certain unusual circumstances specified below, the time for determinations on requests may be extended up to a total of 10 additional working days. The requester shall be notified in writing of any extension and of the reason for it, as well as of the data on which a determination will be made. Unusual circumstances include:

(1) The need to search for and collect records from field offices or other establishments that are separate from the Washington office of the Council;

(2) The need to search for, collect, and examine a voluminous amount of material which is sought in a request; or,

(3) The need for consultation with another agency having substantial interest in the subject matter of the request.

If no determination has been made by the end of the 10-day period or the end of the last extension, the requester may deem his request denied and may exercise a right of appeal in accordance with § 810.4.

§ 810.4 Appeals.

(a) When a request has been denied, the requester may, within 30 days of receipt of the denial, appeal the denial to the Executive Director of the Council. Appeals to the Executive Director shall be in writing, shall be addressed to the Executive Director, Advisory Council on Historic Preservation, 1522 K Street NW., Washington, DC 20005, and shall be clearly marked ''FREEDOM OF INFORMATION APPEAL.'' Requests that are not so marked will be honored, but will be deemed not to have been received by the Council, for purposes of computing the response time, until the date on which they are identified by a member of the Council staff as being an appeal pursuant to the Freedom of Information Act.

(b) The appeal will be acted on within 20 working days of receipt. A written decision shall be issued. Where the decision upholds an initial denial of information, the decision shall include a reference to the specific exemption in the Freedom of Information Act which authorizes withholding the information, a brief explanation of how the exemption applies to the record withheld, and a brief statement of why a discretionary release is not appropriate. The decision shall also inform the requester of the right to seek judicial review in the U.S. District Court where the requester resides or has his principal place of business, or in which the agency records are situated, or in the District of Columbia.

(c) If no decision has been issued within 20 working days, the requester is deemed to have exhausted his administrative remedies.

§810.5 Fees.

(a) Fees shall be charged according to the schedules contained in paragraph (b) of this section unless it is determined that the requested information will be of primary benefit to the general public rather than to the requester. In that case, fees may be waived. Fees shall not be charged where they would amount to less than $3.00.

(b) The following charges shall be assessed:

(1) Copies of documents—$0.10 per page.

(2) Clerical searches—$1.00 for each one quarter hour in excess of the first quarter hour spent by clerical personnel in searching for requested records.

(3) Professional searches—$2.00 for each one quarter hour in excess of the first quarter hour spent by professional or managerial personnel in determining which records are covered by a request or other tasks that cannot be performed by clerical personnel.

(c) Where it is anticipated that fees may amount to more than $25.00, the requester shall be advised of the anticipated amount of the fee and his consent obtained before the request is processed. The time limits for processing the request under §810.3 shall not begin to run until the requester's written agreement to pay the fees has been received. In the discretion of the Administrative Officer, advance payment of fees may be required before requested records are made available.

(d) Payment should be made by check or money order payable to the Advisory Council on Historic Preservation.

§810.6 Exemptions.

(a) The Freedom of Information Act exempts from disclosure nine categories of records which are described in 5 U.S.C. 552(b).

(b) When a request encompasses records which would be of concern to or which have been created primarily by another Federal agency, the record will be made available by the Council only if the document was created primarily to meet the requirements of the Council's regulations implementing section 106 of the National Historic Preservation Act or other provisions of law administered primarily by the Council. If the record consists primarily of materials submitted by State or local governments, private individuals, organizations, or corporations, to another Federal agency in fulfillment of requirements for receiving assistance, permits, licenses, or approvals from the agency, the Council may refer the request to that agency. The requester shall be notified in writing of the referral.

PART 811—CONFLICTS OF INTEREST

Sec.
811.1 General provisions.
811.2 Scope.
811.3 Financial interests.
811.4 Outside work and activities.
811.5 Gifts, entertainment and favors.
811.6 Other conflicts.
811.7 Statements of employment and financial interest.
811.8 Review and analysis of statements.
811.9 Procedures for resolving conflicts of interest—members.
811.10 Procedures for resolving conflicts of interest—employees.
811.11 Definitions.

AUTHORITY: E.O. 11222; 5 CFR parts 734, 735, and 738; Pub. L. 95–521 Ethics In Government Act, (5 U.S.C. 301).

SOURCE: 47 FR 25520, June 14, 1982, unless otherwise noted.

§811.1 General provisions.

(a) *Purpose.* These regulations set forth Council policies and identify principle laws and regulations that relate to member and employee conflict of interest responsibilities. The regulations are applicable to all members of the Council and their designees, both ex officio and appointed, and to all specified employees of the Council.

(b) *General policy.* Members and employees of the Council are expected to maintain high standards of honesty, integrity, impartiality, and conduct to ensure the proper performance of government business and the continual trust and confidence of citizens in their government. It is the intent of these regulations that members and employees avoid any action that might result in or create the appearance of (1) using public office for private gain; (2) giving preferential treatment to any organization or person; (3) impeding government efficiency or economy; (4) losing

complete independence or impartiality of action; (5) making a government decision outside official channels; or (6) affecting adversely the confidence of the public in the integrity of the government.

(c) *Member and employee responsibility.* It is the responsibility of members and employees to familiarize themselves and comply with these regulations.

§ 811.2 Scope.

(a) *Content.* These regulations prescribe policies and procedures for the avoidance of conflicts of interests in connection with members' or employees' Council positions or in the discharge of their official Council responsibilities, and set out the requirements for reporting and reviewing financial interests and outside employment.

(b) *Types of requirements.* Members and employees have a duty to avoid apparent or actual conflicts of interest pursuant to two authorities. First, 18 U.S.C. 203, 205, 208 and 209 impose criminal sanctions on officers and employees of the Federal government, including special government employees, who participate in certain official activities where they have a conflicting personal financial interest. Second, Executive Order 11222 prescribes standards of ethical conduct for government officers and employees and special government employees and requires officers and employees and special government employees occupying certain government positions to report all financial interests and outside employment and certain affiliations. These authorities have the common objective of assuring that government officers and employees conduct government business free from the constraints that conflicting interests might present.

(c)(1)(i) Members of the Council fall into three groups: *Special government employees, officers or employees of the Executive Branch,* and *officers and employees of the Legislative Branch.*

(ii) *Special government employees,* as defined by 18 U.S.C. 202, are those Council members who have been appointed or designated to perform for fewer than 130 days per year. Included in this category for purposes of these regulations are all private members, the mayor, the governor, the Chairman of the National Trust for Historic Preservation, and the President of the National Conference of State Historic Preservation Officers.

(iii) The Secretaries of Interior and Agriculture and their designees and the heads of the four other agencies of the United States appointed by the President and their designees are *officers and employees of the Executive Branch.*

(iv) The Architect of the Capitol is an *officer or employee of the Legislative Branch* who is appointed by the President.

(2) For purposes of these regulations, unless otherwise specified, all members of the Council and their designees shall be referred to as *members* regardless of their classification under other authorities.

(3) All Council staff members are referred to as *employees.*

§ 811.3 Financial interests.

(a) *Policy.* A personal financial interest may create an actual or apparent conflict of interest. This section sets forth standards of conduct to avoid such conflicts.

(b) *Restrictions—Members and Employees.* No member or employee shall—

(1) Have a direct or indirect financial interest that conflicts substantially or appears to conflict substantially with the member's or employee's Council duties and responsibilities; or

(2) Engage, directly or indirectly, in financial transactions resulting from, or primarily relying on, information obtained through the member's or employee's Council membership or employment.

§ 811.4 Outside work and activities.

(a) *Policy.* Under certain circumstances, outside work or activities may create an actual or apparent conflict of interest. In general, outside work or activities are permitted to the extent that they do not prevent employees from devoting their primary interests, talents, and energies to the accomplishment of their work for the Council or tend to create a conflict or appearance of conflict between the private interests of members or employees and their Council responsibilities.

(b) *Restrictions—Members who are heads of Federal agencies and their designees and the Architect of the Capitol and his designee:* (1) It shall not be considered to be a conflict of interest for members who are the heads of Federal agencies or their designees or for the Architect of the Capitol or his designee to engage in the performance of their statutory duties under other provisions of law. The Council may adopt procedures for dealing with instances where an undertaking proposed or sponsored by a member's agency or by the Architect of the Capitol comes before the Council.

(2) Members who are the heads of Federal agencies and their designees and the Architect of the Capitol and his designee may not engage in outside activities not compatible with the full and proper discharge of the members' official duties and responsibilities as members of the Council.

(3) Members who are the heads of Federal agencies and their designees shall abide by the conflict of interest regulations of their own agencies except when they are acting in their official capacities as Council members.

(c) *Restrictions—other Members:* Members not covered by paragraph (b) of this section shall not:

(1) Engage in outside activities not compatible with the full and proper discharge of the member's official duties and responsibilities as a member of the Council;

(2) Perform outside work or engage in outside activities (i) that are of such a nature that they may be reasonably construed by the public to be the official acts of the Council, (ii) that involve the use of Council facilities, equipment, and supplies of any kind, or (iii) that involve the use for private gain of official Council information not available to the public;

(3) Receive any salary or anything of monetary value from a private source as compensation for services to the Council (18 U.S.C. 209); or

(4) Use the member's Council employment to coerce a person to provide financial benefit to the member or another person.

(d) *Restrictions-Employees:* No employee shall—

(1) Engage in outside employment or other outside activity not compatible with the full and proper discharge of the duties and responsibilities of the employee's Council employment; or

(2) Engage in any activity prohibited by paragraphs (c) (2), (3), and (4) of this section.

§811.5 Gifts, entertainment and favors.

Members or employees shall not solicit or accept, directly or indirectly, any gift, gratuity, favor, entertainment, loan, or any other thing of monetary value from a person who has, or is seeking to obtain, business or financial relations with the Council or has interests that may be substantially affected by the performance or nonperformance of Council duties. The Council adopts the exceptions to this prohibition set forth in 5 CFR 735.202 (b) (1) through (4).

§811.6 Other conflicts.

(a) *Use of Council property.* No member or employee shall use or allow the use of Council property for other than officially approved activities.

(b) *Use of Council membership.* No member who is a *special government employee* under §811.2(c) shall use his Council membership for a purpose that is, or gives the appearance of being, motivated by the desire for private gain for the member or another person.

(c) *Misuse of information.* No member or employee shall use for private gain or allow the use of inside information which has not been made available to the public. Inside information is information obtained through or in connection with the member's Council membership or the employees' Council employment.

(d) *Indebtedness; gambling, betting and lotteries; conduct prejudicial to the Council; miscellaneous provisions.* Members and employees shall be bound by the terms of 5 CFR 735.207 through 735.210.

(e) *Post-employment conflicts.* Members and employees shall comply with the terms of 5 CFR part 737 regarding post-employment conflicts of interest.

§ 811.7 Statements of employment and financial interest.

(a) *General.* All employees who are classified at GS–13 or above or at comparable pay levels and all members shall file a Statement of Employment and Financial Interest.

(b) *When to file.* Each member or employee required to file a Statement of Employment and Financial Interest shall file such a Statement with the Ethics Counselor at the time of entrance on duty as a new member or employee, or within thirty days after the Ethics Counselor notifies a member or employee of the need to file such a Statement.

(c) *Members who have filed elsewhere.* A member who has filed a Statement of Employment and Financial Interest under 2 U.S.C. 701, *et seq.* or 5 U.S.C. App. sec. 201, *et seq.,* may satisfy these regulations by submitting that Statement to the Ethics Counselor.

(d) *What to report.* (1) Statements of Employment and Financial Interest shall be made on Department of the Interior forms DI–212 and DI–213, unless otherwise specified in these regulations. Employees and Federal members shall use form DI–212 and all private members shall use form DI–213. The Executive Director shall use SF 278. Federal members who have filed SF 278 or another equivalent form may use those forms. Forms DI–212, DI–213 and SF 278 are available from the Ethics Counselor.

(2) Members and employees shall disclose all employment, outside activities or financial interests that relate to, or appear to relate to, the member's or employee's work at the Council.

(3) Members and employees must file a supplementary Statement of Employment and Financial Interests if pertinent information arises or is discovered after any Statement is filed.

(4) If any information required to be included on a Statement of Employment and Financial Interests or supplementary Statement is not known to the member or employee but is known to another person, the member or the employee shall request that other person to submit to the Ethics Counselor information on the member's or employee's behalf.

(e) *Confidentiality of member's and employee's statements.* (1) Except for Statements filed pursuant to 2 U.S.C. 701, *et seq.,* or 5 U.S.C. App. 201, *et seq.,* and submitted to the Council under paragraph (c) of this section, and except for the Statement of the Executive Director, each Statement of Employment and Financial Interest will be held in confidence. The Ethics Counselor is responsible for maintaining the Statements in strict confidence. Members and employees having access to Statements shall not allow information to be disclosed from Statements except to those individuals who must have access in order to carry out responsibilities assigned by these regulations or specific law.

(2) Statements of Employment and Financial Interest will be retained by the Ethics Counselor. All Statements shall be destroyed two years after a member or employee leaves a position in which a Statement is required or two years after the member or employee leaves the Council, whichever is earlier.

§ 811.8 Review and analysis of statements.

(a) *Review by Ethics Counselor.* Each Statement of Employment and Financial Statement shall be reviewed by the Ethics Counselor to ensure that the member or employee is in compliance with these regulations. The Ethics Counselor will exercise judgment and reasonableness in reviewing Statements, but will be alert to potential, actual, or apparent conflicts which may be indicated.

(b) *Determination of conflict and referral for resolution.* If a member's or employee's Statement of Employment and Financial Interest reflects a potential, actual, or apparent conflict, the Ethics Counselor shall endeavor to resolve the matter informally with the member or employee. If a member's conflict cannot be resolved, the Ethics Counselor shall refer the member's Statement and a report of efforts made to determine and resolve the conflict to the Chairman of the Council for appropriate action. If an employee's conflict cannot be resolved, the Ethics Counselor shall refer the employee's Statement and a report of efforts made to

determine and resolve the conflict to the Executive Director for appropriate action.

(c) *Opportunity to provide information.* At all stages in the review process, members and employees shall be provided full opportunity to offer information and explanation prior to any final determination.

§811.9 Procedures for resolving conflicts of interest—members.

(a) *Remedial action.* (1) Members shall disqualify themselves from participating in any Council proceeding involving any matter in which they have a potential, actual, or apparent conflict of interest. In lieu of disqualification, members may divest themselves of the interest, establish a blind trust, or otherwise eliminate the conflict of interest.

(2) Members with unresolved conflicts of interest may be disqualified by the Chairman.

(b) *Chairman's authority.* The Chairman of the Council is authorized to take whatever remedial action authorized by these regulations that is appropriate to protect the integrity of the Council.

§811.10 Procedures for resolving conflicts of interest—employees.

(a) *Remedial action.* Violations of these regulations by an employee may be cause for mandatory remedial action. If the Executive Director decides that remedial action is required, the Executive Director shall initiate immediate action to eliminate the conflict or apparent conflict of interest within a reasonable time. Remedial action may include reassignment or restriction of the employee, diverstiture of the interest, establishment of a blind trust, or other means by which the conflict or apparent conflict is eliminated.

(b) *Disciplinary action.* Employees who refuse to comply with an order for remedial action shall be considered to be in violation of these regulations and may be subject to disciplinary action, including suspension or removal from their positions.

(c) *The Executive Director's authority and decision.* The Executive Director is authorized to order resolution of conflict of interest situations and the Executive Director's decision regarding remedial action shall be final.

§811.11 Definitions.

(a) *Apparent conflict.* A situation where a reasonable member of the public could suppose a member or employee to be in conflict, even though the member or employee might not be.

(b) *Conflict or actual conflict.* A situation where a member's or employee's duties or responsibilities at the Council are or will be affected or influenced by the member's or employee's financial interest or outside employment of activities.

(c) *Direct interest.* Ownership or part ownership of lands, stocks, bonds, or other holdings by a member or employee in the member's or employee's name. Direct interest includes the holdings of a spouse and minor child and the holdings of other relatives, including in-laws, who live in the member's or employee's home.

(d) *Indirect interest.* Ownership or part ownership of land, stocks, bonds, or other holdings by a member or employee in the name of another person where the member or employee reaps the benefits of the ownership. An indirect interest is considered to be a direct interest for purposes of these regulations.

(e) *Outside work and activities.* All gainful employment and other activities other than the performance of official duties.

(f) *Potential conflict.* A situation where a conflict or an apparent conflict is likely to occur in the future.

PART 812—ENFORCEMENT OF NONDISCRIMINATION ON THE BASIS OF HANDICAP IN PROGRAMS OR ACTIVITIES CONDUCTED BY THE ADVISORY COUNCIL ON HISTORIC PRESERVATION

Sec.
812.101 Purpose.
812.102 Application.
812.103 Definitions.
812.104—812.109 [Reserved]
812.110 Self-evaluation.
812.111 Notice.
812.112—812.129 [Reserved]

812.130 General prohibitions against discrimination.
812.131—812.139 [Reserved]
812.140 Employment.
812.141—812.148 [Reserved]
812.149 Program accessibility: Discrimination prohibited.
812.150 Program accessibility: Existing facilities.
812.151 Program accessibility: New construction and alterations.
812.152—812.159 [Reserved]
812.160 Communications.
812.161—812.169 [Reserved]
812.170 Compliance procedures.
812.171—812.999 [Reserved]

AUTHORITY: 29 U.S.C. 794.

SOURCE: 51 FR 22896, June 23, 1986, unless otherwise noted.

§ 812.101 Purpose.

This part effectuates section 119 of the Rehabilitation, Comprehensive Services, and Developmental Disabilities Amendments of 1978, which amended section 504 of the Rehabilitation Act of 1973 to prohibit discrimination on the basis of handicap in programs or activities conducted by Executive agencies or the United States Postal Service.

§ 812.102 Application.

This part applies to all programs or activities conducted by the agency.

§ 812.103 Definitions.

For purposes of this part, the term—

Assistant Attorney General means the Assistant Attorney General, Civil Rights Division, United States Department of Justice.

Auxiliary aids means services or devices that enable persons with impaired sensory, manual, or speaking skills to have an equal opportunity to participate in, and enjoy the benefits of, programs or activities conducted by the agency. For example, auxiliary aids useful for persons with impaired vision include readers, brailled materials, audio recordings, telecommunications devices and other similar services and devices. Auxiliary aids useful for persons with impaired hearing include telephone handset amplifiers, telephones compatible with hearing aids, telecommunication devices for deaf persons (TDD's), interpreters, notetakers, written materials, and other similar services and devices.

Complete complaint means a written statement that contains the complainant's name and address and describes the agency's alleged discriminatory action in sufficient detail to inform the agency of the nature and date of the alleged violation of section 504. It shall be signed by the complainant or by someone authorized to do so on his or her behalf. Complaints filed on behalf of classes or third parties shall describe or identify (by name, if possible) the alleged victims of discrimination.

Facility means all or any portion of buildings, structures, equipment, roads, walks, parking lots, rolling stock or other conveyances, or other real or personal property.

Handicapped person means any person who has a physical or mental impairment that substantially limits one or more major life activities, has a record of such an impairment, or is regarded as having such an impairment.

As used in this definition, the phrase:

(1) *Physical or mental impairment* includes—

(i) Any physiological disorder or condition, cosmetic disfigurement, or anatomical loss affecting one or more of the following body systems: Neurological; musculoskeletal; special sense organs; respiratory, including speech organs; cardiovascular; reproductive; digestive; genitourinary; hemic and lymphatic; skin; and endocrine; or

(ii) Any mental or psychological disorder, such as mental retardation, organic brain syndrome, emotional or mental illness, and specific learning disabilities. The term *physical or mental impairment* includes, but is not limited to, such diseases and conditions as orthopedic, visual, speech, and hearing impairments, cerebral palsy, epilepsy, muscular dystrophy, multiple sclerosis, cancer, heart disease, diabetes, mental retardation, emotional illness, and drug addiction and alocoholism.

(2) *Major life activities* includes functions such as caring for one's self, performing manual tasks, walking, seeing, hearing, speaking, breathing, learning, and working.

(3) *Has a record of such an impairment* means has a history of, or has been misclassified as having, a mental or

physical impairment that substantially limits one or more major life activities.

(4) *Is regarded as having an impairment* means—

(i) Has a physical or mental impairment that does not substantially limit major life activities but is treated by the agency as constituting such a limitation;

(ii) Has a physical or mental impairment that substantially limits major life activities only as a result of the attitudes of others toward such impairment; or

(iii) Has none of the impairments defined in paragraph (1) of this definition but is treated by the agency as having such an impairment.

Historic preservation programs means programs conducted by the agency that have preservation of historic properties as a primary purpose.

Historic properties means those properties that are listed or eligible for listing in the National Register of Historic Places or properties designated as historic under a statute of the appropriate State or local government body.

Qualified handicapped person means—

(1) With respect to preschool, elementary, or secondary education services provided by the agency, a handicapped person who is a member of a class of persons otherwise entitled by statute, regulation, or agency policy to receive education services from the agency.

(2) With respect to any other agency program or activity under which a person is required to perform services or to achieve a level of accomplishment, a handicapped person who meets the essential eligibility requirements and who can acheive the purpose of the program or activity without modifications in the program or activity that the agency can demonstrate would result in a fundamental alteration in its nature;

(3) With respect to any other program or activity, a handicapped person who meets the essential eligibility requirements for participation in, or receipt of benefits from, that program or activity; and

(4) *Qualified handicapped person* is defined for purposes of employment in 29 CFR 1613.702(f), which is made applicable to this part by § 812.140.

Section 504 means section 504 of the Rehabilitation Act of 1973 (Pub. L. 93–112, 87 Stat. 394 (29 U.S.C. 794)), as amended by the Rehabilitation Act Amendments of 1974 (Pub. L. 93–516, 88 Stat. 1617), and the Rehabilitation, Comprehensive Services, and Developmental Disabilities Amendments of 1978 (Pub. L. 95–602, 92 Stat. 2955). As used in this part, section 504 applies only to programs or activities conducted by Executive agencies and not to federally assisted programs.

Substantial impairment means a significant loss of the integrity of finished materials, design quality, or special character resulting from a permanent alteration.

§§ 812.104—812.109 [Reserved]

§ 812.110 Self-evaluation.

(a) The agency shall, by August 24, 1987, evaluate its current policies and practices, and the effects thereof, that do not or may not meet the requirements of this part, and, to the extent modification of any such policies and practices is required, the agency shall proceed to make the necessary modifications.

(b) The agency shall provide an opportunity to interested persons, including handicapped persons or organizations representing handicapped persons, to participate in the self-evaluation process by submitting comments (both oral and written).

(c) The agency shall, until three years following the completion of the self-evaluation, maintain on file and make available for public inspection:

(1) A description of areas examined and any problems identified, and

(2) A description of any modifications made.

§ 812.111 Notice.

The agency shall make available to employees, applicants, participants, beneficiaries, and other interested persons such information regarding the provisions of this part and its applicability to the programs or activities conducted by the agency, and make such information available to them in such manner as the head of the agency finds necessary to apprise such persons

of the protections against discrimination assured them by section 504 and this regulation.

§§ 812.112—812.129 [Reserved]

§ 812.130 General prohibitions against discrimination.

(a) No qualified handicapped person shall, on the basis of handicap, be excluded from participation in, be denied the benefits of, or otherwise be subjected to discrimination under any program or activity conducted by the agency.

(b)(1) The agency, in providing any aid, benefit, or service, may not, directly or through contractual, licensing, or other arrangements, on the basis of handicap—

(i) Deny a qualified handicapped person the opportunity to participate in or benefit from the aid, benefit, or service;

(ii) Afford a qualified handicapped person an opportunity to participate in or benefit from the aid, benefit, or service that is not equal to that afforded others;

(iii) Provide a qualified handicapped person with an aid, benefit, or service that is not as effective in affording equal opportunity to obtain the same result, to gain the same benefit, or to reach the same level of achievement as that provided to others;

(iv) Provide different or separate aid, benefits, or services to handicapped persons or to any class of handicapped persons than is provided to others unless such action is necessary to provide qualified handicapped persons with aid, benefits, or services that are as effective as those provided to others;

(v) Deny a qualified handicapped person the opportunity to participate as a member of planning or advisory boards; or

(vi) Otherwise limit a qualified handicapped person in the enjoyment of any right, privilege, advantage, or opportunity enjoyed by others receiving the aid, benefit, or service.

(2) The agency may not deny a qualified handicapped person the opportunity to participate in programs or activities that are not separate or different, despite the existence of permissibly separate or different programs or activities.

(3) The agency may not, directly or through contractual or other arrangments, utilize criteria or methods of administration the purpose or effect of which would—

(i) Subject qualified handicapped persons to discrimination on the basis of handicap; or

(ii) Defeat or substantially impair accomplishment of the objectives of a program or activity with respect to handicapped persons.

(4) The agency may not, in determining the site or location of a facility, make selections the purpose or effect of which would—

(i) Exclude handicapped persons from, deny them the benefits of, or otherwise subject them to discrimination under any program or activity conducted by the agency; or

(ii) Defeat or substantially impair the accomplishment of the objectives of a program or activity with respect to handicapped persons.

(5) The agency, in the selection of procurement contractors, may not use criteria that subject qualified handicapped persons to discrimination on the basis of handicap.

(6) The agency may not administer a licensing or certification program in a manner that subjects qualified handicapped persons to discrimination on the basis of handicap, nor may the agency establish requirements for the programs or activites of licensees or certified entities that subject qualified handicapped persons to discrimination on the basis of handicap. However, the programs or activities of entities that are licensed or certified by the agency are not, themselves, covered by this part.

(c) The exclusion of nonhandicapped persons from the benefits of a program limited by Federal statute or Executive order to handicapped persons or the exclusion of a specific class of handicapped persons from a program limited by Federal statute or Executive order to a different class of handicapped persons is not prohibited by this part.

(d) The agency shall administer programs and activities in the most integrated setting appropriate to the needs of qualified handicapped persons.

§§812.131—812.139 [Reserved]

§812.140 Employment.

No qualified handicapped person shall, on the basis of handicap, be subjected to discrimination in employment under any program or activity conducted by the agency. The definitions, requirements, and procedures of section 501 of the Rehabilitation Act of 1973 (29 U.S.C. 791), as established by the Equal Employment Opportunity Commission in 29 CFR part 1613, shall apply to employment in federally conducted programs or activities.

§§812.141—812.148 [Reserved]

§812.149 Program accessibility: Discrimination prohibited.

Except as otherwise provided in §812.150, no qualified handicapped person shall, because the agency's facilities are inaccessible to or unusable by handicapped persons, be denied the benefits of, be excluded from participation in, or otherwise be subjected to discrimination under any program or activity conducted by the agency.

§812.150 Program accessibility: Existing facilities.

(a) *General.* The agency shall operate each program or activity so that the program or activity, when viewed in its entirety, is readily accessible to and usable by handicapped persons. This paragraph does not—

(1) Necessarily require the agency to make each of its existing facilities accessible to and usable by handicapped persons;

(2) In the case of historic preservation programs, require the agency to take any action that would result in a substantial impairment of significant historic features of an historic property; or

(3) Require the agency to take any action that it can demonstrate would result in a fundamental alteration in the nature of a program or activity or in undue financial and administrative burdens. In those circumstances where agency personnel believe that the proposed action would fundamentally alter the program or activity or would result in undue financial and administrative burdens, the agency has the burden of proving that compliance with §812.150(a) would result in such alteration or burdens. The decision that compliance would result in such alteration or burdens must be made by the agency head or his or her designee after considering all agency resources available for use in the funding and operation of the conducted program or activity, and must be accompanied by a written statement of the reasons for reaching that conclusion. If an action would result in such an alteration or such burdens, the agency shall take any other action that would not result in such an alteration or such burdens but would nevertheless ensure that handicapped persons receive the benefits and services of the program or activity.

(b) *Methods*—(1) *General.* The agency may comply with the requirements of this section through such means as redesign of equipment, reassignment of services to accessible buildings, assignment of aides to beneficiaries, home visits, delivery of services at alternate accessible sites, alteration of existing facilities and construction of new facilities, use of accessible rolling stock, or any other methods that result in making its programs or activities readily accessible to and usable by handicapped persons. The agency is not required to make structural changes in existing facilities where other methods are effective in achieving compliance with this section. The agency, in making alterations to existing buildings, shall meet accessibility requirements to the extent compelled by the Architectural Barriers Act of 1968, as amended (42 U.S.C. 4151–4157), and any regulations implementing it. In choosing among available methods for meeting the requirements of this section, the agency shall give priority to those methods that offer programs and activities to qualified handicapped persons in the most integrated setting appropriate.

(2) *Historic preservation programs.* In meeting the requirements of §812.150(a) in historic preservation programs, the agency shall give priority to methods

that provide physical access to handicapped persons. In cases where a physical alteration to an historic property is not required because of § 812.150(a)(2) or (a)(3), alternative methods of achieving program accessibility include—

(i) Using audio-visual materials and devices to depict those portions of an historic property that cannot otherwise be made accessible;

(ii) Assigning persons to guide handicapped persons into or through portions of historic properties that cannot otherwise be made accessible; or

(iii) Adopting other innovative methods.

(c) *Time period for compliance.* The agency shall comply with the obligations established under this section by October 21, 1986, except that where structural changes in facilities are undertaken, such changes shall be made by August 22, 1989, but in any event as expeditiously as possible.

(d) *Transition plan.* In the event that structural changes to facilities will be undertaken to achieve program accessibility, the agency shall develop, by February 23, 1987, a transition plan setting forth the steps necessary to complete such changes. The agency shall provide an opportunity to interested persons, including handicapped persons or organizations representing handicapped persons, to participate in the development of the transition plan by submitting comments (both oral and written). A copy of the transition plan shall be made available for public inspection. The plan shall, at a minimum—

(1) Identify physical obstacles in the agency's facilities that limit the accessibility of its programs or activities to handicapped persons;

(2) Describe in detail the methods that will be used to make the facilities accessible;

(3) Specify the schedule for taking the steps necessary to achieve compliance with this section and, if the time period of the transition plan is longer than one year, identify steps that will be taken during each year of the transition period; and

(4) Indicate the official responsible for implementation of the plan.

§ 812.151 Program accessibility: New construction and alterations.

Each building or part of a building that is constructed or altered by, on behalf of, or for the use of the agency shall be designed, constructed, or altered so as to be readily accessible to and usable by handicapped persons. The definitions, requirements, and standards of the Architectural Barriers Act (42 U.S.C. 4151–4157), as established in 41 CFR 101–19.600 to 101–19.607, apply to buildings covered by this section.

§§ 812.152—812.159 [Reserved]

§ 812.160 Communications.

(a) The agency shall take appropriate steps to ensure effective communication with applicants, participants, personnel of other Federal entities, and members of the public.

(1) The agency shall furnish appropriate auxiliary aids where necessary to afford a handicapped person an equal opportunity to participate in, and enjoy the benefits of, a program or activity conducted by the agency.

(i) In determining what type of auxiliary aid is necessary, the agency shall give primary consideration to the requests of the handicapped person.

(ii) The agency need not provide individually prescribed devices, readers for personal use or study, or other devices of a personal nature.

(2) Where the agency communicates with applicants and beneficiaries by telephone, telecommunication devices for deaf person (TDD's) or equally effective telecommunication systems shall be used.

(b) The agency shall ensure that interested persons, including persons with impaired vision or hearing, can obtain information as to the existence and location of accessible services, activities, and facilities.

(c) The agency shall provide signage at a primary entrance to each of its inaccessible facilities, directing users to a location at which they can obtain information about accessible facilities. The international symbol for accessibility shall be used at each primary entrance of an accessible facility.

(d) This section does not require the agency to take any action that it can

demonstrate would result in a fundamental alteration in the nature of a program or activity or in undue financial and adminstrative burdens. In those circumstances where agency personnel believe that the proposed action would fundamentally alter the program or activity or would result in undue financial and administrative burdens, the agency has the burden of proving that compliance with §812.160 would result in such alteration or burdens. The decision that compliance would result in such alteration or burdens must be made by the agency head or his or her designee after considering all agency resources available for use in the funding and operation of the conducted program or activity, and must be accompanied by a written statement of the reasons for reaching that conclusion. If an action required to comply with this section would result in such an alteration or such burdens, the agency shall take any other action that would not result in such an alteration or such burdens but would nevertheless ensure that, to the maximum extent possible, handicapped persons receive the benefits and services of the program or activity.

§§812.161—812.169 [Reserved]

§812.170 Compliance procedures.

(a) Except as provided in paragraph (b) of this section, this section applies to all allegations of discrimination on the basis of handicap in programs or activities conducted by the agency.

(b) The agency shall process complaints alleging violations of section 504 with respect to employment according to the procedures established by the Equal Employment Opportunity Commission in 29 CFR part 1613 pursuant to section 501 of the Rehabilitation Act of 1973 (29 U.S.C. 791).

(c) The General Counsel shall be responsible for coordinating implementation of this section. Complaints may be sent to the General Counsel, Advisory Council on Historic Preservation, 1100 Pennsylvania Avenue, NW., Washington, DC 20004.

(d) The agency shall accept and investigate all complete complaints for which it has jurisdiction. All complete complaints must be filed within 180 days of the alleged act of discrimination. The agency may extend this time period for good cause.

(e) If the agency receives a complaint over which it does not have jurisdiction, it shall promptly notify the complainant and shall make reasonable efforts to refer the complaint to the appropriate government entity.

(f) The agency shall notify the Architectural and Transportation Barriers Compliance Board upon receipt of any complaint alleging that a building or facility that is subject to the Architectural Barriers Act of 1968, as amended (42 U.S.C. 4151–4157), or section 502 of the Rehabilitation Act of 1973, as amended (29 U.S.C. 792), is not readily accessible to and usable by handicapped persons.

(g) Within 180 days of the receipt of a complete complaint for which it has jurisdiction, the agency shall notify the complainant of the results of the investigation in a letter containing—

(1) Findings of fact and conclusions of law;

(2) A description of a remedy for each violation found; and

(3) A notice of the right to appeal.

(h) Appeals of the findings of fact and conclusions of law or remedies must be filed by the complainant within 90 days of receipt from the agency of the letter required by §812.170(g). The agency may extend this time for good cause.

(i) Timely appeals shall be accepted and processed by the head of the agency.

(j) The head of the agency shall notify the complainant of the results of the appeal within 60 days of the receipt of the request. If the head of the agency determines that additional information is needed from the complainant, he or she shall have 60 days from the date of receipt of the additional information to make his or her determination on the appeal.

(k) The time limits cited in paragraphs (g) and (j) of this section may be extended with the permission of the Assistant Attorney General.

(l) The agency may delegate its authority for conducting complaint investigations to other Federal agencies, except that the authority for making the final determination may not be delegated to another agency.

[51 FR 22896, June 23, 1986, as amended at 51 FR 22893, June 23, 1986]

§§ 812.171—812.999 [Reserved]

PARTS 813—899 [RESERVED]

CHAPTER IX—PENNSYLVANIA AVENUE DEVELOPMENT CORPORATION

Part		*Page*
901	Bylaws of the Corporation	126
902	Freedom of Information Act	129
903	Privacy Act	143
904	Uniform relocation assistance and real property acquisition for Federal and federally assisted programs	149
905	Standards of conduct	149
906	Affirmative action policy and procedure	157
907	Environmental quality	162
908	Policy and procedures to facilitate the retention of displaced businesses and residents in the Pennsylvania Avenue Development Area	169
909	Enforcement of nondiscrimination on the basis of handicap in programs or activities conducted by the Pennsylvania Avenue Development Corporation	174
910	General guidelines and uniform standards for urban planning and design of development within the Pennsylvania Avenue Development Area	180
911–999	[Reserved]	

NOTE: Public Law 104–99, which incorporated the terms of the Department of the Interior and Related Agencies Appropriations Act, 1996 (H.R. 1977), as passed by the House of Representatives on December 13, 1995, provides that the Pennsylvania Avenue Development Corporation terminates as of April 1, 1996. H.R. 1977 provides that ''any regulations prescribed by the [Pennsylvania Avenue Development] Corporation in connection with the Pennsylvania Avenue Development Corporation Act of 1972 (40 U.S.C. 871–885) and the Federal Triangle Development Act (40 U.S.C. 1101–1109) shall continue in effect until suspended by regulations prescribed by the Administrator of the General Services Administration.'' Accordingly, the authority to administer the regulations in 36 CFR Chapter IX is transferred to the General Services Administration. See the Pennsylvania Avenue Development Corporation document, ''Transfer of Responsibilities and Effectiveness of PADC Regulations After PADC Termination'', published at 61 FR 11308, March 20, 1996.

PART 901—BYLAWS OF THE CORPORATION

Sec.
901.1 Title and office.
901.2 Establishment.
901.3 Board of directors.
901.4 Officers.
901.5 Annual report.
901.6 Seal.
901.7 Amendments.

AUTHORITY: Sec. 6(5), Pub. L. 92–578, 88 Stat. 1270(5) (40 U.S.C. 875(5)).

SOURCE: 40 FR 41524, Sept. 8, 1975, unless otherwise noted.

§ 901.1 Title and office.

(a) *Title.* The name of the Corporation is the Pennsylvania Avenue Development Corporation.

(b) *Office.* The office of the Corporation shall be in the city of Washington, District of Columbia.

§ 901.2 Establishment.

(a) *Creation.* The Corporation, a wholly owned instrumentality of the United States subject to the Government Corporation Control Act (31 U.S.C. 841 *et seq.*), was established by the Pennsylvania Avenue Development Corporation Act of 1972 (Pub. L. 92–578, 86 Stat. 1266 (40 U.S.C. 871 *et seq.*)), as amended, hereinafter referred to as *the Act*.

(b) *Purposes.* The purposes for which this Corporation was established are those stated and promulgated by Congress in the Act.

§ 901.3 Board of directors.

(a) *Powers and responsibilities.* The business, property and affairs of the Corporation shall be managed and controlled by the Board of Directors, and all powers specified in the Act are vested in them. The Board may, at its discretion and as hereinafter provided, delegate authority necessary to carry on the ordinary operations of the Corporation to officers and staff of the Corporation.

(b) *Composition; number; selection; terms of office.* The Board of Directors shall be comprised of fifteen voting members and eight nonvoting members. The powers and management of the Corporation shall reside with the fifteen voting members, and the procedures of the Board shall be determined by them.

(1) The fifteen voting members shall include the seven government agency representatives specified in subsection 3(c) of the Act (or, their designees), and eight individuals meeting the qualifications of that subsection, appointed by the President of the United States from private life, at least four of whom shall be residents and registered voters of the District of Columbia.

(2) The Chairman and Vice Chairman shall be designated by the President of the United States from among those members appointed from private life.

(3) Upon his appointment, the Chairman shall invite the eight representatives designated in subsection 3(g) of the Act to serve as non-voting members of the Board of Directors.

(4) Each member of the Board of Directors appointed from private life shall serve a term of six years from the expiration of his predecessor's term; except that the terms of the Directors first taking office shall begin on October 27, 1972 and shall expire as designated at the time of appointment. A Director may continue to serve until his successor has qualified.

(5) A Director appointed from private life wishing to resign shall submit a letter of resignation to the President of the United States, and his resignation shall become effective upon the date of the President's acceptance thereof.

(6) A Director, appointed to fill a vacancy occurring prior to the expiration of the term for which his predecessor was appointed, shall serve for the remainder of such term.

(c) *Meetings.* (1) The Board of Directors shall meet and keep its records at the office of the Corporation.

(2) Meetings of the Board of Directors shall be held at the call of the Chairman, but not less often than once every three months. The Chairman shall also call a meeting at the written request of any five voting members.

(3) The Chairman shall direct the Secretary to give the members of the Board notice of each meeting, either personally, or by mail, or by telegram, stating the time, the place and the agenda for the meeting. Notice by telephone shall be personal notice. Any Director may waive, in writing, notice as

to himself, whether before or after the time of the meeting, and the presence of a Director at any meeting shall constitute a waiver of notice of that meeting. Notice, in whatever form, shall be given so that a Director will have received it five working days prior to the time of the meeting.

(4) Unless otherwise limited by the notice thereof, any and all Corporation business may be transacted at any meeting.

(5) The Chairman shall preside at meetings of the Board of Directors, or the Vice Chairman in the absence of the Chairman. In the event of the absence of both the Chairman and the Vice Chairman, the Directors present at the meeting shall designate a Presiding Officer.

(d) *Quorum.* The presence of a majority of the number of voting Directors serving at the time of a meeting of the Board shall constitute a quorum for the transaction of business at such meeting of the Board. The act of a majority of the voting Directors at any meeting at which there is a quorum shall be an act of the Board of Directors. If there shall be less than a quorum at any meeting, a majority of the voting Directors present may adjourn the meeting until such time as a quorum can practically and reasonably be obtained.

(e) *Directors serving in stead.* Each member of the Board of Directors specified in paragraphs (1) through (7) of subsection 3(c) of the Act, if unable to serve in person, may designate up to two officials from his agency or department to serve on the Board in his stead. Such designation shall be effected by a letter of appointment, from the Director specified in the Act, received by the Chairman prior to or at a meeting of the Board of Directors. If two officials are so designated, then the Director specified in the Act shall identify one as the First Designee and the other as the Second Designee. The Second Designee may only serve as a Director if the First Designee is not in attendance at a meeting of the Board of Directors. An official designated to serve in stead shall serve as the voting Director of the represented agency until the Chairman receives written notice from the Director specified in the Act, or his successor, that the designation is rescinded.

(f) *Vote by proxy.* Voting members of the Board of Directors unable to attend a meeting may vote by proxy on resolutions which have been printed in the agenda in advance for the meeting.

(1) A Director unable to attend a meeting of the Board may submit a vote to be cast by the Presiding Officer by means of a written signed statement of his vote and the resolution to which it pertains together with any statement bearing on the matter the Director wishes to have read. The proxy vote shall be submitted to the Chairman with a separate signed copy to the Secretary, to be received not later than the close of business of the day prior to the date fixed for the meeting.

(2) The Presiding Officer shall cast proxy votes received by the Chairman in the following manner:

(i) Upon the close of discussion on a resolution for which there has been submitted one or more valid proxy votes, the Presiding Officer shall announce that he holds proxy vote(s) from named Director(s), and shall read any explanatory statements submitted by the Director(s) voting by proxy;

(ii) The Presiding Officer shall take the vote of the Directors present and then declare the proxy votes in hand;

(iii) The Secretary shall orally verify the validity of the votes submitted to be cast by proxy, and shall record them with the votes cast by the Directors present on the resolution.

(3) Proxy votes shall not be utilized to effect the presence of a quorum.

(g) *Compensation of Directors.* Members of the Board of Directors shall be compensated in the manner provided in section 3 of the Act.

(h) *Approval of annual budget.* Upon completion by the staff of a draft annual budget request, the Chairman shall call a meeting of the Board of Directors for its review and consideration. Upon approval by the Board of the draft budget request, it may be submitted to the Office of Management and Budget.

[40 FR 41524, Sept. 8, 1975, as amended at 48 FR 20903, May 10, 1983]

§ 901.4 Officers.

(a) *General provisions.* The corporate officers of the Corporation shall consist of a President, an Executive Director, two Assistant Directors, a Secretary (who shall be appointed by the Chairman from among the staff of the Corporation), and such other officers as the Board of Directors may from time-to-time appoint. Any corporate officer elected or appointed by the Board of Directors may be removed at any time, with or without cause, by the affirmative vote of a majority of the Board of Directors.

(b)(1) *Powers and duties of the President.* The Chairman of the Board of Directors shall be the President and chief executive officer of the Corporation and shall have the general powers and duties of supervision and management usually vested in the office of a president of a corporation. The President shall see that all resolutions and policies of the Board are carried into effect, and shall have power to execute contracts, leases, agreements, and other documents necessary for the operation of the Corporation.

(2) *Assumption of powers and duties by Vice Chairman.* In the event that the position of Chairman becomes vacant, the Vice Chairman shall promptly notify the President of the United States in writing to that effect and upon giving such notice, shall assume the Chairman's powers and duties as President and Chief Executive Officer of the Corporation, including specific powers and duties delegated to the Chairman by the Board of Directors. Such assumption of the Chairman's powers and duties shall cease upon the appointment or designation of a new Chairman or Acting Chairman by the President of the United States. The Vice Chairman shall also assume the powers and duties of the Chairman in the event of the latter's incapacity, if the Chairman so requests in writing, or if a majority of the voting members of the Board of Directors finds by resolution that the Chairman is unable to exercise the powers and duties of his office. Such assumption of the Chairman's powers and duties shall cease upon the Vice Chairman's receipt of a letter from the Chairman stating that he or she is able to resume the exercise of the powers and duties of his office.

(c) *Appointment of certain officers.* The Board of Directors shall appoint an Executive Director and two Assistant Directors, who may be appointed and compensated without regard to the provisions of title 5 U.S.C. governing appointments in the competitive service and chapter 51 and subchapter IV of chapter 53 of title 5 U.S.C. Between meetings of the Board of Directors the Chairman may make appointments to the foregoing positions, when they become vacant by resignation or otherwise. However, the Chairman shall move to have such interim appointments confirmed at the next meeting of the Board. The Chairman shall have power to increase or decrease the salaries of the officers appointed under this section.

(d) *Powers and duties of the Executive Director.* The Executive Director shall be the chief of the Corporation's staff and shall have general powers of supervision and management over the administration of the Corporation. The Executive Director shall have power to:

(1) Execute contracts, agreements, and other documents necessary for planning and design work and for ordinary operations of the Corporation.

(2) Hire staff (including temporary or intermittent experts and consultants).

(3) Procure space, equipment, supplies, and obtain interagency and commercial support services.

(4) Direct and manage the day-to-day operations and work of the Corporation.

(5) Supervise planning and development activities of the Corporation in accordance with the development plan and resolutions of the Board of Directors.

(6) Perform such other duties and exercise such powers as the President and Board of Directors may prescribe.

(e) *Powers and duties of the Assistant Director/Legal.* The Assistant Director/Legal shall be the General Counsel of the Corporation, advising the Board of Directors and the staff on all legal matters affecting the functioning of the Corporation. He shall:

(1) Coordinate with the Department of Justice in assuring that the interests of the Corporation are represented

in any litigation arising from its authorities or actions.

(2) Advise the Board of Directors and the staff of statutory or regulatory requirements, and assure compliance therewith.

(3) Prepare or review all contracts, agreements or other documents of a legal nature.

(4) Prepare or review all draft legislation, regulations, official notices and other legal publications.

(5) Perform such other duties as may be prescribed by the Board of Directors, the President, or the Executive Director.

(f) *Powers and duties of the Assistant Director/Development*. The Assistant Director/Development shall advise the Board of Directors, officers and staff of the Corporation on all development activities to accomplish the goals of the development plan. He shall:

(1) Manage development activities in accordance with the development plan.

(2) Function as a key management official performing a wide range of duties required to accomplish the rebuilding of Pennsylvania Avenue.

(3) Provide managerial responsibility for the work of all project managers and consultants relating to development projects.

(4) Coordinate the tasks of other staff professionals as required for accomplishment of projects.

(5) Be liaison between the Corporation and other governmental agencies that review projects in the development area.

(6) Perform such other duties as may be prescribed by the Board of Directors, the President, or the Executive Director.

(g) *Powers and Duties of the Secretary*. The Secretary, to be appointed by the Chairman from among the Corporation's staff, shall give notice of all meetings of the Board of Directors and record and keep the minutes thereof, keep in safe custody the seal of the Corporation, and shall affix the same to any instrument requiring it. When so affixed, the seal shall be attested by the signature of the Secretary. The Secretary shall also perform such other duties as may be prescribed by the Board of Directors, the President, or the Executive Director.

[40 FR 41524, Sept. 8, 1975, as amended at 47 FR 34536, Aug. 10, 1982]

§901.5 Annual report.

The Executive Director shall prepare annually a comprehensive and detailed report of the Corporation's operations, activities, and accomplishments for the review of the Board of Directors. Upon approval by the Board, the Chairman shall transmit the report in January of each year to the President of the United States and to the Congress.

§901.6 Seal.

The Corporation may adopt a corporate seal which shall have the name of the Corporation and year of incorporation printed upon it. The seal may be used by causing it or a facsimile thereof to be impressed, affixed, or reproduced.

§901.7 Amendments.

These bylaws may be altered, amended, or repealed by the Board of Directors at any meeting, if notice of the proposed alteration, amendment, or repeal is contained in the notice of the meeting.

PART 902—FREEDOM OF INFORMATION ACT

Subpart A—Applicability and Policy

Sec.
902.01 Purpose and applicability.
902.02 Statement of policy.
902.03 Definitions.

Subpart B—General Administration

902.10 Delegation of administration of this part.
902.11 How records may be requested.
902.12 Maintenance of statistics; annual report to Congress.
902.13 Indexes of Corporation records.
902.14 Deletion of nondiscloseable information from requested records.
902.15 Protection of records.

Subpart C—Publication in the Federal Register

902.20 Applicability.
902.21 Publication in the FEDERAL REGISTER shall be constructive notice of information that affects the public.

Subpart D—Availability of Records Not Published in the Federal Register

902.30 Applicability.
902.31 Access, inspection and copying.

Subpart E—Availability of Reasonably Described Records

902.40 Applicability.
902.41 Public access to reasonably described records.
902.42 Request for records of concern to more than one government organization.

Subpart F—Exemptions From Public Access to Corporation Records

902.50 Applicability.
902.51 Records relating to matters that are required by Executive order to be kept secret.
902.52 Records related solely to internal personnel rules and practices.
902.53 Records exempted from disclosure by statute.
902.54 Trade secrets and commercial or financial information that is privileged or confidential.
902.55 Intragovernmental exchanges.
902.56 Protection of personal privacy.
902.57 Investigatory files compiled for law enforcement purposes.
902.58 Reports of financial institutions.
902.59 Geological and geophysical information.

Subpart G—Time Limitations

902.60 Initial determination.
902.61 Final determination.
902.62 Extension of time limits.

Subpart H—Procedures for Administrative Appeal of Decisions Not To Disclose Records

902.70 General.
902.71 Forms for appeal.
902.72 Time limitations on filing an appeal.
902.73 Where to appeal.
902.74 Agency decision.

Subpart I—Fees

902.80 General.
902.81 Payment of fees.
902.82 Fee schedule.
902.83 Waiver or reduction of fees.

AUTHORITY: 5 U.S.C. 552; 52 FR 10012–10019 (March 27, 1987); E.O. 12600, 52 FR 23781 (June 23, 1987).

SOURCE: 41 FR 43143, Sept. 30, 1976, unless otherwise noted.

Subpart A—Applicability and Policy

§ 902.01 Purpose and applicability.

This part contains regulations of the Corporation implementing 5 U.S.C. 552, as amended. It informs the public about where and how the Corporation's records may be obtained. The following provisions are applicable to all records of the Corporation in existence at the time a request for records is made. The regulations establish fee schedules applicable to the search and copying of requested records. This part identifies the officials having authority to act on requests and prescribes the procedures to appeal decisions which initially deny disclosure. Indexes maintained to reflect all records subject to this part are available for public inspection and copying as provided herein.

§ 902.02 Statement of policy.

In keeping with the spirit of the Freedom of Information Act, 5 U.S.C. 552, the policy of the Corporation is one of full and responsible disclosure of its records to the public. Therefore, all records of the Corporation, unless otherwise exempted under subpart F of this part, are declared to be available for public inspection and copying. Each officer and employee of the Corporation is directed to cooperate to this end and shall make records available to the public with reasonable promptness. A record may not be withheld from the public solely because its release might suggest administrative error or embarrass an officer or employee of the Corporation.

§ 902.03 Definitions.

As used in this part—

(a) *Act* means section 552 of title 5 U.S.C., as amended, Pub. L. 90–23, 81 Stat. 54, June 5, 1967; as amended, Pub. L. 93–502, 88 Stat. 1561, November 11, 1974. Pub. L. 90–23 repealed and superseded Pub. L. 89–487, 80 Stat. 250. July 4, 1966, sometimes referred to as the *Freedom of Information Act* or *Public Information Act*.

(b) *Chairman* means the Chairman of the Corporation's Board of Directors and President of the Corporation.

(c) *Corporation* means the Pennsylvania Avenue Development Corporation,

including the Board of Directors, Executive Officers, Corporation staff, and any subordinate organizational units operating under the Pennsylvania Avenue Development Corporation Act of 1972, Pub. L. 92–578, 86 Stat. 1266 (40 U.S.C. 871 *et seq.*), as amended.

(d) *Person* means *person* as defined in 5 U.S.C. 551(2).

(e) *Records* means any and all writing, drawings, maps, recordings, tapes, films, slides, photographs, or other documentary materials by which information is preserved.

(f) *Submitter* means any person or entity that provides or has provided information to the Corporation or about which the Corporation possess records subject to Exemption 4 of the Freedom of Information Act.

(g) *Workday* means a calendar day excluding Saturday, Sunday and Federal holidays, office hours being 9 a.m. to 5 p.m.

[41 FR 43143, Sept. 30, 1976, as amended at 53 FR 10374, Mar. 31, 1988]

Subpart B—General Administration

§902.10 Delegation of administration of this part.

Except as provided in subpart H of this part, authority to administer this part is delegated to the Administrative Officer, who shall act upon all requests for access to records which are received by the Corporation from any person citing the Act.

[41 FR 43143, Sept. 30, 1976, as amended at 48 FR 17354, Apr. 22, 1983]

§902.11 How records may be requested.

In accordance with §902.41 of subpart E of this part all requests for records shall be made to the Administrative Officer, Pennsylvania Avenue Development Corporation, 1331 Pennsylvania Avenue, NW, Suite 1220 North, Washington, DC 20004.

[41 FR 43143, Sept. 30, 1976, as amended at 48 FR 17354, Apr. 22, 1983; 50 FR 45824, Nov. 4, 1985]

§902.12 Maintenance of statistics; annual report to Congress.

(a) The Administrative Officer shall maintain records of:

(1) The fees collected by the Corporation for making records available under this part;

(2) The number of denials of requests for records made under this part, and the reasons for each denial;

(3) The number of appeals arising from denials, the result of each appeal, and the reasons for the action upon each appeal that results in a denial of information;

(4) The names and titles or positions of each person responsible for each denial of records requested under this part, and the number of instances of participation for each person;

(5) The results of each proceeding conducted pursuant to subsection 552(a)(4)(f) of title 5, U.S.C., including a report of the disciplinary action against the official or employee who was primarily responsible for improperly withholding records or an explanation of why disciplinary action was not taken;

(6) Every rule made by the Corporation affecting or implementing the Act;

(7) The fee schedule listing fees for search and duplication of records pursuant to request under the Act; and

(8) All other information which indicates efforts to administer fully the letter and spirit of the Act.

(b) The Administrative Officer shall annually prepare a report accounting for each item in paragraph (a) of this section for the prior calendar year. On or before March 1st of each year, the report shall be submitted to the Speaker of the House of Representatives and the President of the Senate for referral to the appropriate committees of Congress.

[41 FR 43143, Sept. 30, 1976, as amended at 48 FR 17354, Apr. 22, 1983]

§902.13 Indexes of Corporation records.

(a) The Administrative Officer shall be responsible for maintenance, publication, distribution and availability for inspection and copying of the current indexes and supplements which are required by 5 U.S.C. (a)(2). Such indexes

shall be published promptly on a quarterly basis unless the Chairman determines by order published in the FEDERAL REGISTER that the pubication would be unnecessary and impractical.

(b) The index of materials under this subpart covers all materials issued, adopted, or promulgated after July 4, 1967 by the Corporation. However, earlier materials may be included in the index to the extent practicable. Each index contains instruction for its use.

[41 FR 43143, Sept. 30, 1976, as amended at 48 FR 17354, Apr. 22, 1983]

§ 902.14 Deletion of nondiscloseable information from requested records.

Whenever a requested record contains information which falls within one of the exempted categories of subpart F of this part, identifying details shall be deleted from the record before it is made available for public inspection and copying. When a requested record contains both discloseable and nondiscloseable information, only that portion which is reasonably segregable after deletion of the nondiscloseable portions, will be released. If the information in the discloseable portion is readily available from another source and that source is made known to the person making the request, the Corporation need not disclose the requested record. In all cases where a deletion is made, an explanation of the deletion shall be attached to the record made available for inspection, distribution, or copying. Appeal of deletions shall be made in accordance with subpart H of this part.

§ 902.15 Protection of records.

(a) No person may, without permission of the Administrative Officer, remove from the Corporation's offices any record made available to him for inspection or copying. In addition, no person may steal, alter, multilate, obliterate, or destroy, in whole or in part, such a record.

(b) Section 641 of title 18 U.S.C. provides, in pertinent part, as follows:

(1) Whoever * * * steals, purloins, knowingly converts to his use or the use of any other or without authority sells, conveys or disposes of any record * * * or thing of value shall be fined not more than $10,000 or imprisoned not more than 10 years or both; but if the value of such property does not exceed the sum of $100, he shall be fined not more than $1,000 or imprisoned not more than one year or both. * * *

(c) Section 2071 of title 18 U.S.C. provides, in pertinent part, as follows:

(1) Whoever willfully and unlawfully conceals, removes, multilates, obliterates, or destroys, or attempts to do so, or with intent to do so takes and carries away any record, proceeding, map, book, paper document, or other thing, filed or deposited * * * in any public office, or with any * * * public officer of the United States, shall be fined not more than $2,000 or imprisoned not more than 3 years, or both.

[41 FR 43143, Sept. 30, 1976, as amended at 48 FR 17354, Apr. 22, 1983]

Subpart C—Publication in the Federal Register

§ 902.20 Applicability.

Subject to the exemptions in subpart F of this part, the Corporation, for the guidance of the public, shall submit to the Director of the Federal Register for publication—

(a) Descriptions of the Corporation's organization and functional responsibilities and the designation of places at which the public may secure information, obtain forms and applications, make submittals or requests, or obtain decisions:

(b) Statements of the general course and method by which the Corporation's functions are channeled and determined, including the nature and requirements of all formal and informal procedures available;

(c) Rules of procedure, descriptions of forms available, and instructions as to the scope and contents of all papers, reports, or examinations;

(d) Substantive rules of general applicability adopted as authorized by law, and statements of general policy or interpretations of general applicability; and,

(e) Each amendment, revision, or repeal of the foregoing.

§902.21 Publication in the Federal Register shall be constructive notice of information that affects the public.

(a) All material described in §902.20 shall be published in the FEDERAL REGISTER. For the purpose of this section, material that is reasonably available to the class of persons affected by it is considered to be published in the FEDERAL REGISTER when it is incorporated by reference with the approval of the Director of the Federal Register.

(b) Publication in the FEDERAL REGISTER of all relevant information shall be considered constructive notice of information that affects the public, except that no person shall be required to resort to or be adversely affected by any matter which is required to be published in the FEDERAL REGISTER and is not so published unless such person has actual and timely notice of the terms of the unpublished matter.

Subpart D—Availability of Records Not Published in the Federal Register

§902.30 Applicability.

(a) This subpart implements section 552(a)(2) of title 5 U.S.C., as amended by 88 Stat. 1561 (1974). It prescribes the rules governing the availability for public inspection and copying of the following:

(1) Final opinions or orders (including concurring and dissenting opinions, if any) made in the adjudication of cases;

(2) Statements of policy or interpretations which have been adopted under the authority of the Corporation's enabling act, including statements of policy or interpretation concerning a particular factual situation. If they can reasonably be expected to have precedential value in any case involving a member of the public in a similar situation, and have not been published in the FEDERAL REGISTER.

(3) Administrative staff manuals or instructions to the staff of the Corporation which affects any member of the public. Included within this category are manuals or instructions which prescribe the manner or performance of any activity by any person. Excepted from this category are staff manuals or instructions to staff concerning internal operating rules, practices, guidelines and procedures for Corporation negotiators and inspectors, the release of which would substantially impair the effective performance of their duties.

(4) Documents and materials offered for sale under the auspices of the Corporation.

(5) Any index of materials which is required to be maintained by the Corporation under §902.13.

(b) Records listed in paragraph (a) of this section, which the Corporation does not make available for public inspection and copying, or that are not indexed as required by §902.13, may not be cited, relied upon, or used as a precedent by the Corporation to adversely affect any person, unless the person against whom it is cited, relied upon, or used, has had actual and timely notice of that material.

(c) This subpart shall not apply to information published in the FEDERAL REGISTER or that is a reasonably described record covered by subpart E of this part.

§902.31 Access, inspection and copying.

(a) Records listed in §902.30(a), are available for inspection and copying by any person at the Corporation's office, 1331 Pennsylvania Avenue, NW., Suite 1220 North, Washington, DC 20004. Facilities for inspection and copying shall be open to the public every workday.

(b) Records listed in §902.30(a), that are published and offered for sale, shall be indexed as required under §902.13, and shall be available for public inspection. Records offered for sale will not be copied by the Corporation for the requester without the approval of the Administrative Officer.

(c) Records listed in §902.30(a) are subject to subpart F of this part and access may be restricted by the Corporation in accordance with that subpart. A refusal to disclose may be appealed by the requester under the provisions of subpart H of this part.

[41 FR 43143, Sept. 30, 1976, as amended at 48 FR 17354, Apr. 22, 1983; 50 FR 45824, Nov. 4, 1985]

Subpart E—Availability of Reasonably Described Records

§ 902.40 Applicability.

This subpart implements section 552(a)(3) of title 5 U.S.C., as amended, and prescribes regulations governing public inspection and copying of reasonably described records in the Corporation's custody. This subpart shall not apply to material which is covered by subparts C and D of this part, and records exempted under subpart F of this part.

§ 902.41 Public access to reasonably described records.

(a) Any person desiring access to a record covered by this subpart may make request for records and copies either in person on any workday at the Corporation's office, or by written request. In either instance, the requester must comply with the following provisions;

(1) A written request must be made for the record;

(2) The request must indicate that it is being made under the Freedom of Information Act (section 552 of title 5 U.S.C.); and

(3) The request must be addressed to the attention of the Administrative Officer, as provided in § 902.11.

(b) Each request for a record should reasonably describe the particular record sought. The request should specify, to the extent possible, the subject matter of the record, the date when it was made, the place where it was made and the person who made it. If the description is insufficient to process the request, the Public Information offices shall promptly notify the person making the request and solicit further information. The Administrative Officer may assist the person in perfecting the request.

(c) Requests made in person at the Corporation's office during regular working hours (9 a.m. to 5 p.m., Monday through Friday, except Federal holidays) shall be processed as provided in subpart G of this part. The Corporation shall provide adequate inspection and copying facilities. Original records may be copied, but may not be released from the custody of the Corporation. Upon payment of the appropriate fee, copies will be provided to the requester by mail or in person.

(d) Every effort will be made to make a record in use by the staff of the Corporation available when requested, and availability may be deferred only to the extent necessary to avoid serious interference with the business of the Corporation.

(e) Notwithstanding paragraphs (a) through (d) of this section, informational materials and services, such as press releases, and similar materials prepared by the Corporation, shall be made available upon written or oral request. These services are considered as part of any informational program of the Government and are readily made available to the public. There is no fee for individual copies of such materials as long as they are in supply. In addition, the Corporation will continue to respond, without charge, to routine oral or written inquiries that do not involve direct access to records of the Corporation.

[41 FR 43143, Sept. 30, 1976, as amended at 48 FR 17354, Apr. 22, 1983]

§ 902.42 Request for records of concern to more than one government organization.

(a) If the release of a record covered by this subpart would be of concern to both the Corporation and another Federal agency, the record will be made available only after consultation with the other agency concerned. Records of another agency in the Corporation's possession will not be disclosed without the approval of the other agency.

(b) If the release of a record covered by this subpart would be of concern to both the Corporation and to a foreign, state or local government, the record will be made available by the Corporation only after consultation with the other interested foreign state or local government. Records of a foreign, state or local government will not be disclosed without the approval of the government concerned.

Subpart F—Exemptions From Public Access to Corporation Records

§902.50 Applicability.

(a) This subpart implements section 552(b) of title 5 U.S.C., which exempts certain records from public inspection under section 552(a). This subpart applies to records requested under subparts D and E of this part. The Corporation may, however, release a record authorized to be withheld under §§902.52 through 902.59 unless it determines that the release of that record would be inconsistent with a purpose of the aforementioned sections. Examples given in §§902.52 through 902.59 of records included within a particular statutory exemption are not necessarily illustrative of all types of records covered by the exemption. Any reasonably segregable portion of a record withheld under this subpart shall be provided to a requester, after deletion of the portions which are exempt under this subpart.

(b) This subpart does not authorize withholding of information or limit the availability of records to the public, except as specifically stated. This subpart is not authority to withhold information from Congress.

§902.51 Records relating to matters that are required by Executive order to be kept secret.

Records relating to matters that are specifically authorized under criteria established by an Executive order to be kept secret in the interest of national defense or foreign policy, include those within the scope of the following, and any further amendment of any of them, but only to the extent that the records are in fact properly classified pursuant to such Executive order:

(a) Executive Order 11652 of March 8, 1972 (3 CFR 1974 Comp. p. 339);

(b) Executive Order 10865 of February 20, 1960 (3 CFR 1959–1963 Comp. p. 398); and

(c) Executive Order 10104 of February 1, 1950 (3 CFR 1949–1953 Comp., p. 298).

These records may not be made available for public inspection.

§902.52 Records related solely to internal personnel rules and practices.

(a) Records related solely to internal personnel rules and practices that are within the statutory exemption include memoranda pertaining to personnel matters such as staffing policies, and policies and procedures for the hiring, training, promotion, demotion, and discharge of employees, and management plans, records, or proposals related to labor-management relationships.

(b) The purpose of this section is to authorize the protection of any record related to internal personnel rules and practices dealing with the relations between the Corporation and its employees.

§902.53 Records exempted from disclosure by statute.

(a) Records relating to matters that are specifically exempted by statute from disclosure may not be made available for public inspection. For example: section 1905 of title 18 U.S.C., protecting trade secrets, processes, and certain economic and other data obtained by examination or investigation, or from reports.

(b) The purpose of this section is to preserve the effectiveness of statutes of the kind cited as an example, in accordance with their terms.

§902.54 Trade secrets and commercial or financial information that is privileged or confidential.

(a) Trade secrets and commercial or financial information that are privileged and for which confidentiality is requested by the person possessing such privilege are within the statutory exemption. This includes the following:

(1) Commercial or financial information not customarily released to the public, furnished and accepted in confidence or disclosure of which could reasonably be expected to cause substantial competitive harm, or both;

(2) Statements of financial interest furnished by officers and employees of the Corporation;

(3) Commercial, technical, and financial information furnished by any person in connection with an application for a loan or a loan guarantee;

(4) Commercial or financial information customarily subjected to an attorney-client or similar evidentiary privilege; or,

(5) Materials in which the Corporation has a property right such as designs, drawings, and other data and reports acquired in connection with any research project, inside or outside of the Corporation, or any grant or contract.

(b) The purpose of this section is to authorize the protection of trade secrets and commercial or financial records that are customarily privileged or are appropriately given to the Corporation in confidence. It assures the confidentiality of trade secrets and commercial or financial information obtained by the Corporation through questionnaires and required reports to the extent that the information would not customarily be made public by the person from whom it was obtained. In any case in which the Corporation has obligated itself not to disclose trade secrets and commercial or financial information it receives, this section indicates the Corporation's intention to honor that obligation to the extent permitted by law. In addition, this section recognizes that certain materials, such as research data and materials, formulae, designs, and architectural drawings, have significance not as records but as items of property acquired, in many cases at public expense. In any case in which similar proprietary material in private hands would be held in confidence, material covered in this section may be held in confidence.

(c)(1) *In general.* For commercial or financial information furnished to the Corporation on or after March 30, 1988, the Corporation shall require the submitter to designate, at the time the information is furnished or within a reasonable time thereafter, any information the submitter considers confidential or privileged. Commercial or financial information provided to the Corporation shall not be disclosed pursuant to a Freedom of Information Act request except in accordance with this paragraph.

(2) *Notice to submitters.* The Corporation shall provide a submitter with prompt written notice of a request encompassing its commercial or financial information whenever required under paragraph (c)(3) of this section, and except as is provided in paragraph (c)(7) of this section. Such written notice shall either describe the exact nature of the information requested or provide copies of the records or portions thereof containing the information. Concurrently with its notice to a submitter, the Corporation shall inform a requestor in writing that the submitter is afforded a reasonable period within which to object to disclosure and that the 10 workday initial determination period provided for in 36 CFR 902.60 may therefore be extended.

(3) *When notice is required.* (i) For information submitted to the Corporation prior to March 30, 1988, the Corporation shall provide a submitter with notice of a request whenever:

(A) The information is less than ten years old;

(B) The information is subject to prior express commitment of confidentiality given by the Corporation to the submitter; or

(C) The Corporation has reason to believe that disclosure of the information may result in substantial competitive harm to the submitter.

(ii) For information submitted to the Corporation on or after March 30, 1988, the Corporation shall provide a submitter with notice of a request whenever:

(A) The submitter has in good faith designated the information as confidential, or

(B) The Corporation has reason to believe that disclosure of the information may result in substantial competitive harm to the submitter.

Notice of a request for information falling within the former category shall be required for a period of not more than ten years after the date of submission unless the submitter requests, and provides acceptable justification for, a specific notice period of greater duration. The submitter's claim of confidentiality should be supported by a statement or certification by an officer or authorized representative that the information in question is in fact confidential and has not been disclosed to the public.

(4) *Opportunity to object to disclosure.* Through the notice described in paragraph (c)(2) of this section, the Corporation shall afford a submitter a reasonable period within which to provide the Corporation with a detailed statement of any objection to disclosure. Such statement shall specify all grounds for withholding any of the information under any exemption of the Freedom of Information Act and, in the case of Exemption 4, shall demonstrate why the information is contended to be privileged or confidential. Information provided by a submitter pursuant to this paragraph may itself be subject to disclosure under the Freedom of Information Act.

(5) *Notice of intent to disclose.* The Corporation shall consider carefully a submitter's objections and specific grounds for nondisclosure prior to determining whether to disclose information. Whenever the Corporation decides to disclose information over the objection of a submitter, the Corporation shall forward to the submitter a written notice which shall include:

(i) A statement of the reasons for which the submitter's disclosure objections were not sustained;

(ii) A description of the information to be disclosed; and

(iii) A specified disclosure date.

Such notice of intent to disclose shall be forwarded a reasonable number of days, as circumstances permit, prior to the specified date upon which disclosure is intended. A copy of such disclosure notice shall be forwarded to the requester at the same time.

(6) *Notice of lawsuit.* Whenever a requester brings suit seeking to compel disclosure of information covered by paragraph (c) of this section, the Corporation shall promptly notify the submitter.

(7) *Exceptions to notice requirements.* The notice requirements of this section shall not apply if:

(i) The Corporation determines that the information should not be disclosed;

(ii) The information lawfully has been published or otherwise made available to the public;

(iii) Disclosure of the information is required by law (other than 5 U.S.C. 552); or

(iv) The designation made by the submitter in accordance with paragraphs (c)(1) and (c)(3)(ii) of this section appears obviously frivolous; except that, in such case, the Corporation shall provide the submitter with written notice of any final decision to disclose information within a reasonable number of days prior to a specified disclosure date.

[41 FR 43143, Sept. 30, 1976, as amended at 53 FR 10374, Mar. 31, 1988]

§902.55 Intragovernmental exchanges.

(a) Any record prepared by a Government officer or employee (including those prepared by a consultant or advisory body) for internal Government use is within the statutory exemption to the extent that it contains—

(1) Opinions, advice, deliberations, or recommendations made in the course of developing official action by the Government, but not actually made a part of that official action, or

(2) Information concerning any pending proceeding or similar matter including any claim or other dispute to be resolved before a court of law, administrative board, hearing officer, or contracting officer.

(b) This section has two distinct purposes. One is to protect the full and frank exchange of ideas, views, and opinions necessary for the effective functioning of the Government and to afford this protection both before and after any action is taken. This judicially recognized privilege of protection against disclosure in litigation or elsewhere is intended to assure that these resources will be fully and readily available to those officials upon whom the responsibility rests to take official and final Corporation action. However, the action itself, any memoranda made part of that action, and the facts on which it is based are not within this protection. The other purpose is to protect against the premature disclosure of material that is in the development stage if premature disclosure would be detrimental to the authorized and appropriate purposes for which the material is being used, or if, because of its tentative nature, the material is likely to be revised or modified before it is officially presented to the public.

(c) Examples of records covered by this section include minutes to the extent they contain matter described in paragraph (a) of this section; staff papers containing advice, opinions, suggestions, or exchanges of views, preliminary to final agency decision or action; budgetary planning and programming information; advance information on such things as proposed plans to procure, lease, or otherwise hire and dispose of materials, real estate, or facilities, documents exchanged preparatory to anticipated legal proceedings; material intended for public release at a specified future time, if premature disclosure would be detrimental to orderly processes of the Corporation; records of inspection, investigations, and surveys pertaining to internal management of the Department; and matters that would not be routinely disclosed under disclosure procedures in litigation and which are likely to be the subject of litigation. However, if such a record also contains factual information, that information must be made available under subpart E of this part unless the facts are so inextricably intertwined with deliverative or policymaking processes, that they cannot be separated without disclosing those processes.

§ 902.56 Protection of personal privacy.

(a) Any of the following personnel, medical, or similar records is within the statutory exemption if its disclosure would harm the individual concerned or be a clearly unwarranted invasion of his personal privacy:

(1) Personnel and background records personal to any officer or employee of the Corporation, or other person, including his home address;

(2) Medical histories and medical records concerning individuals, including applicants for licenses; or

(3) Any other detailed record containing personal information identifiable with a particular person.

(b) The purpose of this section is to provide a proper balance between the protection of personal privacy and the preservation of the public's rights to Corporation information by authorizing the protection of information that, if released, might unjustifiably invade an individual's personal privacy.

§ 902.57 Investigatory files compiled for law enforcement purposes.

(a) Files compiled by the Corporation for law enforcement purposes, including the enforcement of the regulations of the Corporation, are within the statutory exemption to the extent that production of such records would:

(1) Interfere with enforcement proceedings;

(2) Deprive a person of a right to a fair trial or an impartial adjudication;

(3) Constitute an unwarranted invasion of personal privacy;

(4) Disclose the identity of a confidential source and in the case of a record compiled by a criminal law enforcement authority in the courts of a criminal investigation, or by an agency conducting a lawful national security intelligence investigation, confidential information furnished only by the confidential source;

(5) Disclose investigative techniques and procedures; or,

(6) Endanger the life or physical safety of law enforcement personnel.

(b) The purpose of this section is to protect from disclosure the law enforcement files of the Corporation including files prepared in connection with related litigation and adjudicative proceedings. It includes the enforcement not only of criminal statutes but all kinds of laws.

§ 902.58 Reports of financial institutions.

Any material contained in or related to any examination, operating, or condition report prepared by, on behalf of, or for the use of, any agency responsible for the regulation or supervision of financial institutions is within the statutory exemption.

§ 902.59 Geological and geophysical information.

Any geological or geophysical information and data (including maps) concerning wells is within the statutory exemption.

Subpart G—Time Limitations

§902.60 Initial determination.

(a) An initial determination whether or not to release a record requested under subparts D and E of this part shall be made by the Public Information Offices within 10 workdays after the receipt of a request which complies with §902.21. Failure of the requester to comply with those provisions may toll the running of the 10 day period until the request is identified as one being made under the Act. This time limit may be extended by up to 10 workdays in accordance with §902.62.

(b) Upon making initial determination, the Administrative Officer shall immediately notify the person making the request as to its disposition. If the determination is made to release the requested record, the Administrative Officer shall make the record promptly available. If the determination is to deny the release of the requested record, the Public Information Officer shall immediately notify the requester of the denial and shall provide the following information.

(1) The reason for the determination, including a reference to the appropriate exemption provided in subpart F of this part;

(2) The right of the request or to appeal the determination as provided in subpart H of this part; and

(3) The name and position of each person responsible for the denial of the request.

[41 FR 43143, Sept. 30, 1976, as amended at 48 FR 17354, Apr. 22, 1983]

§902.61 Final determination.

A determination with respect to any appeal made pursuant to subpart H of this part will be made within twenty work days after the date of receipt of the appeal. The time limit provided may be extended by up to 10 workdays in accordance with §902.62.

§902.62 Extension of time limits.

(a) In unusual circumstances, the time limits prescribed in §§902.60 and 902.61 may be extended by written notice to the person making the request. The notice shall set forth the reasons for the extension and the date on which a determination is expected to be dispatched. Under no circumstances shall the notice specify a date that would result in an extension for more than 10 workdays.

(b) As used in this section, *unusual circumstances* means (but only to the extent reasonably necessary to the proper processing of the particular request):

(1) The need to search for, collect and appropriately examine a voluminous amount of separate and distinct records which are demanded in a single request;

(2) The need to search for and collect the requested records from field facilities or other establishments that are separate from the office processing the request; or

(3) The need for consultation, which shall be conducted with all practicable speed, with another agency having a substantial interest in the determination of the request or among two or more components of the agency having substantial subject matter interest therein.

(c) Any person having made a request for records under this part shall have exhausted his administrative remedies with respect to such request, if the Corporation fails to comply with the applicable time limitations set forth in this subject.

Subpart H—Procedures for Administrative Appeal of Decisions Not To Disclose Records

§902.70 General.

Within the time limitations of subpart G of this part, if the Administrative Officer makes a determination not to disclose a record requested under subparts D and E of this part, he shall furnish a written statement of the reasons for that determination to the person making the request. The statement shall indicate the name(s) and title(s) of each person responsible for the denial of the request, and the availability of an appeal with the Corporation. Any person whose request for a record has

been denied may submit a written appeal to the Corporation requesting reconsideration of the decision.

[41 FR 43143, Sept. 30, 1976, as amended at 48 FR 17354, Apr. 22, 1983]

§ 902.71 Forms for appeal.

Although no particular written form is prescribed for on appeal, the letter or similar written statement appealing a denial of a record shall contain a description of the record requested, the name and position of the official who denied the request, the reason(s) given for the denial, and other pertinent facts and statements deemed appropriate by the appellant. The Corporation may request additional details if the information submitted is insufficient to support an appeal.

§ 902.72 Time limitations on filing an appeal.

An appeal must be submitted in writing within thirty days from the date of receipt of the initial written denial and must contain the information requested in § 902.71.

§ 902.73 Where to appeal.

An appeal shall be addressed to the Chairman of the Board of Directors, Pennsylvania Avenue Development Corporation, 1331 Pennsylvania Avenue, NW., Suite 1220 North, Washington, DC 20004.

[41 FR 43143, Sept. 30, 1976, as amended at 50 FR 45824, Nov. 4, 1985]

§ 902.74 Agency decision.

(a) The Chairman shall have sole authority to act on an appeal, which seeks to reverse an initial decision denying disclosure of a record. He shall review each appeal and provide the appellant and other interested parties with a written notice of his decision. The decision of the Chairman as to the availability of the record is administratively final.

(b) If the decision of the Chairman sustains the refusal to disclose, the notice of decision shall set forth the reasons for the refusal, including the specific exemptions from disclosure under the Act that are the bases of the decision not to disclose. The notice shall further advise the appellant that judicial review is available on complaint to the appropriate District Court of the United States, as provided in section 552(a)(4)(B) of title 5 U.S.C.

(c) As set out in § 902.61, the final decision on appeal shall be made within 20 workdays after the receipt of the appeal. An extension of this limitation is authorized as prescribed under § 902.62.

Subpart I—Fees

§ 902.80 General.

(a) This subpart prescribes fees for services performed by the Corporation under subparts D and E of this part. This subpart shall only apply to the services described herein. The fees for the service listed reflect the actual cost of the work involved in compiling requested record and copying, if necessary.

(b) A fee shall not be charged for time spent in resolving legal or policy issues.

[41 FR 43143, Sept. 30, 1976, as amended at 52 FR 26677, July 16, 1987]

§ 902.81 Payment of fees.

The fees prescribed in this part may be paid in cash or by check, draft, or postal money order made payable to the Pennsylvania Avenue Development Corporation.

[52 FR 26677, July 16, 1987]

§ 902.82 Fee schedule.

(a) *Definitions.* For purposes of this section—

(1) A *commercial use request* is a request from or on behalf of one who seeks information for a use or purpose that furthers the commercial, trade, or profit interests of the requester or the person on whose behalf the request is made. In determining whether a requester properly belongs in this category, the Corporation will determine the use to which the requester will put the records sought. Where the Corporation has reasonable cause to doubt the use to which a requester will put the records sought, or where that use is not clear from the request itself, the Corporation will seek additional clarification before assigning the request to a specific category.

(2) *Direct costs* means those expenditures the Corporation actually incurs in searching for and duplicating (and in the case of commercial requesters, reviewing) records to respond to an FOIA request. Direct costs include, for example, the salary of the employee performing work (the basic rate of pay for the employee plus 16 percent of that rate to cover benefits) and the cost of operating duplicating machinery. Not included in direct costs are overhead expenses such as costs of space, and heating or lighting the facility in which the records are stored.

(3) *Duplication* means the process of making a copy of a record necessary to respond to an FOIA request. Such copies can take the form of paper copy, microform, audio-visual materials, or machine-readable documentation (e.g., magnetic tape or disk), among others. The copy provided must be in a form that is reasonably usable by requesters.

(4) *Educational institution* means a preschool, a public or private elementary or secondary school, an institution of graduate higher education, an institution of undergraduate higher education, an institution of professional education, and an institution of vocational education, which operates a program or programs of scholarly research.

(5) *Non-commercial scientific institution* means an institution that is not operated on a *commercial* basis, within the meaning of paragraph (a)(1) of this section and that is operated solely for the purpose of conducting scientific research, the results of which are not intended to promote any particular product or industry.

(6) *Representative of the new media* means any person actively gathering news for an entity that is organized and operated to publish or broadcast news to the public. The term *news* means information that is about current events or that would be of current interest to the public. Examples of new media entities include television or radio stations broadcasting to the public at large, and publishers of periodicals (but only in those instances when they can qualify as disseminators of *news*) who make their products available for purchase or subscription by the general public. These examples are not intended to be all-inclusive. Moreover, as traditional methods of news delivery evolve (e.g., electronic dissemination of newspapers through telecommunications services), such alternative media would be included in this category. *Freelance* journalists may be regarded as working for a news organization if they can demonstrate a solid basis for expecting publication through that organization, even though not actually employed by it. A publication contract would be the clearest proof, but the Corporation may also look to the past publication record of a requester in making this determination.

(7) *Review* means the process of examining records located in response to a request that is for a commercial use (see paragraph (a)(1) of this section) to determine whether any portion of any record located is permitted to be withheld. It also includes processing any records for disclosure, e.g., doing all that is necessary to excise them and otherwise prepare them for release. Review does not include time spent resolving general legal or policy issues regarding the application of exemptions.

(8) *Search* includes all time spent looking for material that is responsive to a request, including page-by-page or line-by-line identification of material within records. A line-by-line search will not be conducted when merely duplicating an entire record would be the less expensive and quicker method of complying with the request. *Search* does not include *review* of material to determine whether the material is exempt from disclosure (see paragraph (a)(7) of this section). Searches may be done manually or by computer using existing programming.

(b) The following provisions shall apply with respect to services rendered to the public in processing requests for disclosure of the Corporation's records under this part:

(1) *Fee for duplication of records:* $0.25 per page. When the Corporation estimates that duplication charges are likely to exceed $25.00, it will notify the requester of the estimated amount of fees, unless the requester has indicated in advance his willingness to pay fees as high as those anticipated. The

Corporation will offer the requester the opportunity to confer with the Corporation's staff in order to reformulate the request to meet the requester's needs at a lower cost.

(2) *Search and review fees.* (i) Searches for records by clerical personnel: $7.00 per hour, including the time spent searching for and copying any records.

(ii) Search for and review of records by professional and supervisory personnel: $11.50 per hour spent searching for any record or reviewing any record to determine whether it may be disclosed, including time spent in copying any record.

(iii) Except for requests seeking records for a commercial use, the Corporation will provide the first 100 pages of duplication and the first two hours of search time without charge. The word *pages* means paper copies of a standard size, either 8½¢¢ by 11″ or 14″ by 14″.

(3) *Duplication of architectural drawings, maps, and similar materials:* (per copy) $10.00.

(4) *Reproduction of 35 mm slides:* (per copy) $1.00.

(5) *Reproduction of enlarged, black and white photographs:* (per copy) $10.00.

(6) *Reproduction of enlarged color photographs:* (per copy) $17.00.

(7) *Certification and validation fee:* $1.75 for each certification or validation of a copy of any record.

(8) *Categories of FOIA requesters and fees to be charged*—(i) *Commercial use requesters.* When the Corporation receives a request for records for commercial use, it will assess charges to recover the full direct costs of searching for, reviewing for release, and duplicating the records sought. Requesters must reasonably describe the records sought.

(ii) *Educational and non-commercial scientific institution requesters.* The Corporation shall provide copies of records to requesters in this category for the cost of reproduction alone, excluding charges for the first 100 pages. To be eligible for inclusion in this category, requesters must show that the request is being made as authorized by and under the auspices of a qualifying institution and that the records are not sought for a commercial use but are sought in furtherance of scholarly (if the request is from an educational institution) or scientific (if the request is from a noncommercial scientific institution) research. Requesters must reasonably describe the records sought.

(iii) *Requesters who are representatives of the news media.* The Corporation shall provide documents to requesters in this category for the cost of reproduction alone, excluding charges for the first 100 pages. To be eligible for inclusion in this category, a requester must meet the criteria in the definition of *representative of the news media* in paragraph (a)(6) of this section, and his or her request must not be made for a commercial use. In reference to this class of requester, a request for records supporting the news dissemination function of the requester shall not be considered to be a request that is for a commercial use. Requestors must reasonably describe the records sought.

(iv) *All other requesters.* The Corporation will charge requesters who do not fit into any of the categories above fees which recover the full reasonable direct cost of searching for and reproducing records that are responsive to the request, except that the first 100 pages of reproduction and the first two hours of search time shall be furnished without charge. Requests from record subjects for records about themselves filed in the Corporation's systems of records will be treated under the fee provisions of the Privacy Act of 1974 which permit fees only for reproduction. Requesters must reasonably describe the records sought.

(9) *Interest.* In the event a requester fails to remit payment of fees charged for processing a request under this part within 30 days from the date such fees were billed, interest on such fees may be assessed beginning on the 31st day after the billing date at the rate prescribed in section 3717 of title 31 U.S.C., and will accrue from the date of the billing.

(10) *Unsuccessful searches.* Except as provided in paragraph (b)(8)(iv) of this section, the cost of searching for a requested record shall be charged even if the search fails to locate such record or it is determined that the record is exempt from disclosure.

(11) *Aggregating requests.* A requester must not file multiple requests at the same time, each seeking portions of a

record or records, solely in order to avoid payment of fees. When the Corporation reasonably believes that a requester, or a group of requesters acting in concert, is attempting to break a request down into a series of requests for the purpose of evading the assessment of fees, the Corporation may aggregate any such requests and charge accordingly.

(12) *Advance payments.* The Corporation will not require a requester to make an advance payment, i.e., payment before work is commenced or continued on a request unless:

(i) The Corporation estimates or determines that allowable charges that a requester may be required to pay are likely to exceed $250; or

(ii) If a requester has previously failed to make timely payments (i.e., within 30 days of billing date) of fees charged under this part, the requester may be required to pay the full amount owed plus any applicable interest accrued thereon or demonstrate that he has, in fact, paid the fee, and to make an advance payment of the full amount of the estimated fee before the Corporation begins to process a new request or a pending request from this requester.

(iii) With regard to any request coming within paragraphs (b)(12) (i) and (ii) of this section, the administrative time limits set forth in §§902.60, 902.61, and 902.62 of this part will begin to run only after the Corporation has received the requisite fee payments.

(iv) *Non-payment.* In the event of nonpayment of billed charges for disclosure of records, the provisions of the Debt Collection Act of 1982 (Pub. L. 97–365), including disclosure to consumer credit reporting agencies and referral to collection agencies, where appropriate, may be utilized to obtain payment.

[52 FR 26677, July 16, 1987]

§902.83 Waiver or reduction of fees.

Fees otherwise chargeable in connection with a request for disclosure of a record shall be waived or reduced where:

(a) Disclosure of the information is in the public interest because it is likely to contribute significantly to public understanding of the operations or activities of the government and is not primarily in the commercial interest of the requester; or

(b) The costs of routine collection and processing of the fee are likely to equal or exceed the amount of the fee.

[52 FR 26679, July 16, 1987]

PART 903—PRIVACY ACT

Sec.

903.1 Purpose and scope.
903.2 Definitions.
903.3 Procedures for notification of records pertaining to individuals.
903.4 Requests for access to records.
903.5 Response to request for access.
903.6 Appeal of initial denial of access.
903.7 Requests for amendment of record.
903.8 Review of request for amendment of record.
903.9 Appeal of initial adverse determination of request for amendment of record.
903.10 Disclosure of records to persons or agencies.
903.11 Routine uses of records maintained in the system of records.
903.12 Fees for furnishing and reproducing records.
903.13 Penalties.

AUTHORITY: 5 U.S.C. 552a; 40 U.S.C. 870.

SOURCE: 42 FR 5973, Feb. 1, 1977, unless otherwise noted.

§903.1 Purpose and scope.

The purpose of this part is to enable the Pennsylvania Avenue Development Corporation to implement the Privacy Act of 1974, and in particular the provisions of 5 U.S.C. 552a, as added by the Act. The Act was designed to insure that personal information about individuals collected by Federal agencies be limited to that which is legally authorized and necessary, and that the information is maintained in a manner which precludes unwarranted intrusions upon individual privacy. The regulations in this part establish, and make public, procedures whereby an individual can:

(a) Request notification of whether or not the Corporation maintains or has disclosed a record pertaining to him or her,

(b) Request access to such a record or an accounting of its disclosure,

(c) Request that the record be amended, and

(d) Appeal any initial adverse determination of a request to amend a record.

§ 903.2 Definitions.

As used in this part:

(a) *Agency* means agency as defined in 5 U.S.C. 552(e).

(b) *Corporation* means the Pennsylvania Avenue Development Corporation.

(c) *Workday* shall be a day excluding a Saturday, Sunday or legal holiday.

(d) *Individual* means a citizen of the United States or an alien lawfully admitted for permanent residence.

(e) *Maintain* includes maintain, collect, use, or disseminate.

(f) *Record* means any items, collection, or grouping of information about an individual that is maintained by an agency, including, but not limited to, his or her education, financial transactions, medical history, and criminal or employment history and that contains his or her name, or the identifying number, symbol or other identifying particular assigned to the individual, such as a finger or voice print or a photograph.

(g) The term *system of records* means a group of records under the control of an agency from which information is retrieved by the name of the individual or by some identifying number, symbol, or other identifying particular assigned to the individual.

(h) The term *statistical record* means a record in a system of records maintained for statistical research or reporting purposes only and not used in whole or in part in making any determination about an identifiable individual except as provided by section 8 of title 13 U.S.C.

(i) The term *routine use* means, with respect to the disclosure of a record, the use of such record for a purpose which is compatible with the purpose for which it was collected.

§ 903.3 Procedures for notification of records pertaining to individuals.

(a) An individual making a written or oral request under the Privacy Act (5 U.S.C. 522a) shall be informed of any Corporation systems of records which pertain to the individual, if the request contains a reasonable identification of the appropriate systems of records as described in the notice published in the FEDERAL REGISTER.

(b) Requests may be made in person between the hours of 9:00 a.m. and 5:00 p.m. Monday through Friday, (except legal holidays). The request should be addressed to the Privacy Protection Officer, Pennsylvania Avenue Development Corporation, 1331 Pennsylvania Avenue, NW., Suite 1220 North, Washington, DC 20004. The Privacy Protection Officer of the Corporation will require adequate personal identification before processing the request. If a request is made in writing it must be under the signature of the requesting individual and include the individual's address, date of birth, and an additional proof of identification, such as a photocopy of a driver's license or similar document bearing the individual's signature. A notarized, signed statement is acceptable to verify the identity of the individual involved without additional proof.

[42 FR 5973, Feb. 1, 1977, as amended at 50 FR 45824, Nov. 4, 1985]

§ 903.4 Requests for access to records.

(a) Except as otherwise provided by law or regulation, an individual, upon request made in person or delivered in writing may gain access to his or her record or to any information pertaining to him or her which is contained in a system of records maintained by the Corporation, and to review the record and have a copy made of all or any portion thereof in a form comprehensible to him or her. An individual seeking access to a Corporation record may be accompanied by a person of his or her choosing. However, the Corporation will require a written statement from the individual authorizing discussion of his or her record in the accompanying person's presence.

(b) A request under paragraph (a) of this section shall be directed to the Privacy Protection Officer at the place, times and in the manner prescribed in § 903.3(a) and (b). The request should include the following information:

(1) The name of the individual;

(2) If made in writing, the information required under § 903.3(b);

(3) A description of system or systems of records which contain the record to which access is requested;

(4) The approximate dates covered by the record; and,

(5) A suggested date and time when the individual would like to view the record.

(c) Requests which do not contain information sufficient to identify the record requested will be returned promptly to the requester, with a notice indicating that information is lacking. Individuals making requests in person will be informed of any deficiency in the specification of records or identification at the time that the request is made. The Privacy Protection Officer of the Corporation will require adequate personal identification before processing a request made in person.

§903.5 Response to request for access.

(a) Within 10 days of receipt of a request made under §903.4 the Privacy Protection Officer shall determine whether access to the record is available under the Privacy Act and shall notify the requesting individual in person or in writing of that determination.

(b) Notices granting access shall inform the individual when and where the requested record may be seen, how copies may be obtained, and of any anticipated fees or charges which may be incurred under §903.11. Access shall be provided within 30 days of receipt of the request unless the Corporation, for good cause shown, is unable to provide prompt access, in which case the individual shall be informed in writing within the 30 days as to the cause for delay and when it is anticipated that access will be granted.

(c) Notices denying access shall state the reasons for the denial, and advise the individual that the decision may be appealed in accordance with the procedures set forth in §903.6.

§903.6 Appeal of initial denial of access.

(a) After receiving notification of an initial denial of access to a record, an individual may request a review and reconsideration of the request by the Executive Director of the Corporation, or an officer of the Corporation designated by him, but other than the Privacy Protection Officer. Appeals for review shall be in writing, addressed to the Executive Director, Pennsylvania Avenue Development Corporation, 1331 Pennsylvania Avenue, NW., Suite 1220 North, Washington, DC 20004. The appeal shall identify the record as in the original request, shall indicate the date of the original request and the date of the initial denial, and shall indicate the expressed basis for the denial.

(b) Not later than 30 days after receipt of an appeal, the Executive Director, or an officer of the Corporation designated by him, will complete review of the appeal and the initial denial and either:

(1) Determine that the appeal should be granted, and notify the individual in writing to that effect; or,

(2) Determine that the appeal should be denied because the information requested is exempt from disclosure. If the reviewing official denies the appeal, he or she shall advise the individual in writing of the decision and the reasons for reaching it, and that the denial of the appeal is a final agency action entitling the individual to seek judicial review in the appropriate district court of the United States as provided in 5 U.S.C. 552a(g).

[42 FR 5973, Feb. 1, 1977, as amended at 50 FR 45824, Nov. 4, 1985]

§903.7 Requests for amendment of record.

(a) An individual may request amendment of a Corporation record pertaining to him or to her, if the individual believes that the record contains information which is not accurate, relevant, timely, or complete. The request shall be in writing, whether presented in person or by mail, shall state with specificity the record sought to be amended, and shall propose wording of the correction or amendment sought. The request shall be directed to the Privacy Protection Officer at the place, times, and in the manner specified in §903.3 (a) and (b). Assistance in preparing a request to amend a record, or to appeal an initial adverse determination under §903.3(a), may be obtained from the Privacy Officer, Pennsylvania Avenue

Development Corporation, 1331 Pennsylvania Avenue, NW., Suite 1220 North, Washington, DC 20004.

(b) Not later than 10 days after the date of receipt of a request the Privacy Protection Officer will acknowledge it in writing. The acknowledgement will clearly describe the request, and if a determination has not already been made, will advise the individual when he or she may expect to be advised of action taken on the request. For requests presented in person, written acknowledgement will be provided at the time when the request is presented. No separate acknowledgement of receipt will be issued if the request can be reviewed and the individual advised of the results of the review within the 10 day period.

[42 FR 5973, Feb. 1, 1977, as amended at 50 FR 45824, Nov. 4, 1985]

§ 903.8 Review of request for amendment of record.

(a) Upon receipt of a request for amendment of a record the Privacy Protection Officer will promptly review the record and: Either:

(1) Amend any portion thereof which the individual believes is not accurate, relevant, timely, or complete; or

(2) Inform the individual of refusal to amend the record in accordance with the request. In reviewing a record pursuant to a request to amend it, the Corporation will assess the accuracy, relevance, timeliness and completeness of the record in terms of the criteria established in 5 U.S.C. 522a(e)(5). In reviewing a record in response to a request to amend it by deleting information, the Corporation will ascertain whether or not the information is relevant and necessary to accomplish a purpose of the Corporation required to be accomplished by statute or by executive order of the President, as prescribed by 5 U.S.C. 522a(e)(1).

(b) The Corporation shall take the action specified in paragraph (a) of this section within 30 days of receipt of a request for amendment of a record, unless unusual circumstances preclude completion of the action within that time. If the expected completion date for the action, as indicated in the acknowledgement provided pursuant to § 903.5 cannot be met, the individual shall be advised of the delay and of a revised date when action is expected to be completed. If necessary for an accurate review of the record, the Corporation will seek, and the individual will supply, additional information in support of his or her request for amending the record.

(c) If the Corporation agrees with all or any portion of an individual's request to amend a record, the Corporation will so advise the individual in writing, and amend the record to the extent agreed to by the Corporation. Where an accounting of disclosures has been kept, the Corporation will advise all previous recipients of the record of the fact that the amendment was made and the substance of the amendment.

(d) If the Corporation disagrees with all or any portion of an individual's request to amend a record, the Corporation shall:

(1) Advise the individual of its adverse determination and the reasons therefor, including the criteria used by the Corporation in conducting the review;

(2) Inform the individual that he or she may request a review of the adverse determination by the Executive Director of the Corporation, or by an officer of the Corporation designated by the Executive Director; and,

(3) Advise the individual of the procedures for requesting such a review including the name and address of the official to whom the request should be directed.

(e) If the Corporation is apprised by another agency of any corrections or other amendments made to a record contained in the Corporation's system of records, the Corporation will promptly amend its record and advise in writing all previous recipients of the record of the fact that the amendment was made and the substance of the amendment.

§ 903.9 Appeal of initial adverse determination of request for amendment of record.

(a) After receipt by an individual of notice of an adverse determination by the Privacy Protection Officer concerning a request to amend a record, the individual may, within 60 working

days after the date of receipt of the notice, appeal the determination by seeking a review by the Executive Director of the Corporation, or by an officer of the Corporation designated by him. The appeal shall be in writing, mailed or delivered to the Executive Director, Pennsylvania Avenue Development Corporation, 1331 Pennsylvania Avenue, NW, Suite 1220 North, Washington, DC 20004. The appeal shall identify the record in the same manner as it was identified in the original request, shall indicate the dates of the original request and of the adverse determination and shall indicate the expressed basis for that determination. In addition, the appeal shall state briefly the reasons why the adverse determination should be reversed.

(b) Not later than 30 days after receipt of an appeal, the Executive Director, or an officer of the Corporation designated by him, will complete a review of the appeal and the initial determination, and either: (1) Determine that the appeal should be granted, take the appropriate action with respect to the record in question, and notify the individual accordingly; or, (2) determine that the appeal should be denied.

(c) The reviewing official may, at his or her option, request from the individual such additional information as is deemed necessary to properly conduct the review. If additional time is required, the Executive Director may, for good cause shown, extend the period for action beyond the 30 days specified above. The individual will then be informed in writing of the delay and the reasons therefor, and of the approximate date on which action is expected to be completed.

(d) If the reviewing official denies the appeal, he or she shall advise the individual in writing:

(1) Of the decision and the reasons for reaching it;

(2) That the denial of the appeal is a final agency action entitling the individual to seek judicial review in the appropriate district court of the United States, as provided in 5 U.S.C. 552a(g); and,

(3) That the individual may file with the Corporation a concise statement setting forth the reasons for his or her disagreement with the refusal of the Corporation to amend the record in question.

(e) Any individual having received notices of a denial of an appeal to amend a record may file a statement of disagreement with the Executive Director not later than 60 working days from the date of receipt of the notice. Such statements shall ordinarily not exceed one page in length, and the Corporation reserves the right to reject statements of excessive length. Upon receipt of a proper and timely statement of disagrement, the Corporation will clearly annotate the record in question to indicate the portion of the record which is in dispute. In any subsequent disclosure containing information about which the individual has filed a statement of disagreement, the Corporation will provide a copy of the statement together with the record to which it pertains. In addition, prior recipients of the disputed record will be provided with a copy of statements of disagreement to the extent that an accounting of disclosures was maintained. If the Corporation deems it apropriate, it may also include in any disclosure its own concise statement of the reasons for not making the amendments requested.

[42 FR 5973, Feb. 1, 1977, as amended at 50 FR 45824, Nov. 4, 1985]

§903.10 Disclosure of records to persons or agencies.

(a) The Corporation will not disclose any record which is contained in a system of records, by any means of communication to any person or to another agency except:

(1) Pursuant to a written request by, or with the prior written consent of, the individual to whom the record pertains;

(2) To those officers and employees of the Corporation who have a need for the record in the performance of their duties;

(3) When required under 5 U.S.C. 522 (The Freedom of Information Act); or

(4) Pursuant to the conditions of disclosure contained in 5 U.S.C. 552a(b)(3) through 5 U.S.C. 522a(b)(11).

(b) The Privacy Protection Officer of the Corporation shall keep an accounting of each disclosure made pursuant to paragraph (a)(4) of this section, in

accordance with 5 U.S.C. 552a(c). Except for disclosures made pursuant to 5 U.S.C. 552a(b)(7), the Privacy Protection Officer shall make the accounting kept under this paragraph available to an individual to whom the record pertains, upon his or her request. An individual requesting an accounting of disclosures should do so at the place, times and in the manner specified in § 903.3 (a) and (b).

§ 903.11 Routine uses of records maintained in the system of records.

(a) It shall be a routine use of the records in this system of records to disclose them to the Department of Justice when:

(1) The Corporation, or any component thereof; or

(2) Any employee of the Corporation in his or her official capacity; or

(3) Any employee of the Corporation in his or her individual capacity where the Department of Justice has agreed to represent the employee; or

(4) The United States, where the Corporation determines that litigation is likely to affect the Corporation or any of its components, is a party to litigation or an interest in such litigation, and the use of such records by the Department of Justice is deemed by the Corporation to be relevant and necessary to the litigation, provided, however, that in each case, the Corporation determines that disclosure of the records to the Department of Justice is a use of the information contained in the records that is compatible with the purpose for which the records were collected.

(b) It shall be a routine use of records maintained by the Corporation to disclose them in a proceeding before a court or adjudicative body before which the Corporation is authorized to appear, when:

(1) The Corporation, or any component thereof; or

(2) Any employee of the Corporation is his or her individual capacity;

(3) Any employee of the agency in his or her individual capacity where the Department of Justice has agreed to represent the employee; or

(4) The United States, where the Corporation determines that litigation is likely to affect the Corporation or any of its components is a party to litigation or has an interest in such litigation and the Corporation determines that use of such records is relevant and necessary to the litigation, provided, however, that, in each case, the Corporation determines that disclosure of the records to the Department of Justice is a use of the information contained in the records that is compatible with the purpose for which the records were collected.

[52 FR 34384, Sept. 11, 1987; 52 FR 39224, Oct. 21, 1987]

§ 903.12 Fees for furnishing and reproducing records.

(a) Individuals will not be charged a fee for:

(1) The search and review of the record;

(2) Any copies of the record produced as a necessary part of the process of making the record available for access;

(3) Any copies of the requested record when it has been determined that access can only be accomplished by providing a copy of the record through the mail. The Privacy Protection Officer may provide additional copies of any record without charge when it is determined that it is in the interest of the Government to do so.

(b) Except as provided in paragraph (a) of this section, fees will be charged for the duplication of records at a rate of 10¢ per page. If it is anticipated that the total fee chargeable to an individual under this subpart will exceed $25, the Corporation shall promptly notify the requester of the anticipated cost. An advance deposit equal to 50% of the anticipated total fee will be required unless waived by the Privacy Protection Officer. In notifying the requester of the anticipated fee, the Privacy Protection Officer shall extend an offer to the requester to consult so that the request might be reformulated in a manner which will reduce the fee, yet still meet the needs of the requester.

(c) Fees must be paid in full prior to delivery of the requested copies. Remittances may be in the form of cash, personal check, bank draft or a postal money order. Remittances, other than

cash shall be made payable to the Treasurer of the United States.

[42 FR 5973, Feb. 1, 1977. Redesignated at 52 FR 34384, Sept. 11, 1987; 52 FR 39224, Oct. 21, 1987]

§ 903.13 Penalties.

The provision of 5 U.S.C. 552a(i), as added by section 3 of the Privacy Act, make it a misdemeanor subject to a maximum fine of $5,000, to knowingly and willfully request or obtain any record concerning an individual from an agency under false pretenses. Similar penalties attach for violations by agency officers and employees of the Privacy Act or regulations established thereunder.

[42 FR 5973, Feb. 1, 1977. Redesignated at 52 FR 34384, Sept. 11, 1987; 52 FR 39224, Oct. 21, 1987]

PART 904—UNIFORM RELOCATION ASSISTANCE AND REAL PROPERTY ACQUISITION FOR FEDERAL AND FEDERALLY ASSISTED PROGRAMS

AUTHORITY: Sec. 213, Uniform Relocation Assistance and Real Property Acquisition Policies Act of 1970, Pub. L. 91–646, 84 Stat. 1894 (42 U.S.C. 4601) as amended by the Surface Transportation and Uniform Relocation Assistance Act of 1987, title IV of Pub. L. 100–17, 101 Stat. 246–256 (42 U.S.C. 4601 *note*).

§ 904.1 Uniform relocation assistance and real property acquisition.

Regulations and procedures for complying with the Uniform Relocation Assistance and Real Property Acquisition Policies Act of 1970 (Pub. L. 91–646, 84 Stat. 1894, 42 U.S.C. 4601), as amended by the Surface Transportation and Uniform Relocation Assistance Act of 1987 (title IV of Pub. L. 100–17, 101 Stat. 246–255, 42 U.S.C. 4601 *note*) are set forth in 49 CFR part 24.

[52 FR 48022, Dec. 17, 1987 and 54 FR 8912, Mar. 2, 1989]

PART 905—STANDARDS OF CONDUCT

Subpart A—General Provisions

Sec.
905.735–101 Principles and purpose.
905.735–102 Adoption of regulations.
905.735–103 Definitions.
905.735–104 Applicability.
905.735–105 Designation of counselor.
905.735–106 Notification to employees and special Government employees.
905.735–107 Review of statements of employment and financial interests.
905.735–108 Remedial and disciplinary action.

Subpart B—Conduct and Responsibilities of Employees

905.735–201 General standards of conduct.
905.735–202 Gifts, entertainment, and favors.
905.735–203 Outside employment and other activity.
905.735–204 Disclosure of information.
905.735–205 Purchase of Government-owned property.

Subpart C—Conduct and Responsibilities of Special Government Employees

905.735–301 General standards of conduct.

Subpart D—Special Standards Applicable to Certain Board Members

905.735–401 Standards.
905.735–402 Advice and determination.

Subpart E—Statements of Employment and Financial Interests

905.735–501 Form and content of statements.
905.735–502 Statements of employment and financial interests by employees.
905.735–503 Statements of employment and financial interests by special Government employees.
905.735–504 Procedures for obtaining statements.
905.735–505 Confidentiality of statements.

Subpart F—Conduct and Responsibilities of Former Employees—Enforcement

905.737–101 Applicable provisions of law.
905.737–102 Enforcement proceedings.

AUTHORITY: 40 U.S.C. 875, unless otherwise noted.

SOURCE: 43 FR 60902, Dec. 29, 1978, unless otherwise noted.

Subpart A—General Provisions

§ 905.735–101 Principles and purpose.

In order to assure that the business of the Pennsylvania Avenue Development Corporation is conducted effectively, objectively, and without improper influence or appearance thereof, all employees and special Government

employees must observe unquestionable standards of integrity and conduct. Employees and special Government employees shall not engage in criminal, infamous, dishonest, immoral, or disgraceful conduct or other conduct prejudicial to the Government. All employees and special Government employees must avoid conflicts of private interest with their public duties and responsibilities. They must consider the propriety of any action in relation to general ethical standards of the highest order, so that public confidence in the integrity of the Government will not be impaired. Certain standards are set by law. Others are set by regulation and by policy. This part incorporates by reference applicable general standards of conduct and prescribes additional necessary elements. Taken together, this part constitutes the Corporation's regulations on this subject. Failure to observe any of the regulations in this part is cause for remedial action.

§ 905.735–102 Adoption of regulations.

Under the authority of 5 CFR 735.104(f), the Corporation adopts the following sections of the Civil Service Commission regulations on ''Employee Responsibilities and Conduct'' found in part 735 of title 5, Code of Federal Regulations: §§ 735.202 (a), (d), (e), (f) through 735.210; 735.302; 735.303(a); 735.304; 735.305(a); 735.306; 735.404 through 735.411; and 735.412 (b) and (d).

[43 FR 60902, Dec. 29, 1978, as amended at 45 FR 15927, Mar. 12, 1980]

§ 905.735–103 Definitions.

As used in this part:

(a) *Board Member* means any member of the Board of Directors of the Pennsylvania Avenue Development Corporation, appointed or serving under section 3, Pub. L. 92–578, 86 Stat. 1267 (40 U.S.C. 872).

(b) *Chairman* means the Chairman of the Board of Directors and President of the Corporation.

(c) *Conflict* means the subordination of public responsibilities to private interests, and includes the appearance of such subordination.

(d) *Consultant* means an individual who serves as an advisor to an officer or division of the Corporation, as distinguished from an officer or employee who carries out the agency's duties and responsibilities. He gives his views or opinions on problems or questions presented him by the Corporation, but he neither performs nor supervises performance of operating functions. Ordinarily, he is expert in the field in which he advises, but he need not be a specialist. His expertness may lie in his possession of a high order of broad administrative, professional, or technical experience indicating that his ability and knowledge make his advice distinctively valuable to the agency. (Chapter 304, Federal Personnel Manual).

(e) *Corporation* means the Pennsylvania Avenue Development Corporation, created by the Pennsylvania Avenue Development Corporation Act of 1972, Pub. L. 92–578, 86 Stat. 1266 (40 U.S.C. 871).

(f) *Employee* means an officer or employee of the Corporation, but does not include a special Government employee as defined herein. The term includes those Board Members who are determined to be officers or employees of the executive or legislative branches of the United States or of the District of Columbia. The term does not include elected officials.

(g) *Executive order* means Executive Order 11222 of May 8, 1965.

(h) *Expert* means a person with excellent qualifications and a high degree of attainment in a professional, scientific, technical, or other field. His knowledge and mastery of the principles, practices, problems, methods, and techniques of his field of activity, or of a specialized area in the field, are clearly superior to those usually possessed by ordinarily competent individuals in that activity. His attainment is such that he usually is regarded as an authority or as a practitioner of unusual competence and skill by other persons in the profession, occupation, or activity. (Chapter 304, Federal Personnel Manual.)

(i) *Head of the agency* means the Chairman.

(j) *Person* means an individual, a corporation, a company, an association, a firm, a partnership, a society, a joint stock company, or any other institution or organization.

(k) *Special Government Employee* means an officer or employee of the Corporation who is retained, designated, appointed or employed to perform, with or without compensation, for not more than 130 days during any period of 365 consecutive days, temporary duties either on a full time or intermittent basis (18 U.S.C. 202(a)). The term includes those Board Members who are appointed from private life and required to file a statement of financial interests with the Chairman of the Civil Service Commission pursuant to part IV of the Executive order, or who are determined to be special government employees of the executive or legislative branches of the United States or the District of Columbia.

§905.735–104 Applicability.

This part applies to each employee and to each special Government employee of the Corporation as defined herein and supplements the Executive order and part 735 of title 5, Code of Federal Regulations, promulgated by the Civil Service Commission on employee responsibilities and conduct.

§905.735–105 Designation of counselor.

In accordance with 5 CFR 735.105(a), the General Counsel of the Corporation is designated to be Ethics Counselor and shall serve as the Corporation's liaison with the Civil Service Commission for matters covered in this part.

§905.735–106 Notification to employees and special Government employees.

(a) At the time these regulations are published, or amended, and not less often than once annually thereafter, the Corporation shall furnish each employee and special Government employees with a copy of the regulations. The Administrative Officer shall insure that each newly hired employee and special Government employee is given a copy of these regulations prior to or at the time of entry on duty.

(b) All employees and special Government employees will be advised by the Corporation of the availability of counseling regarding the provisions of this part.

§905.735–107 Review of statements of employment and financial interests.

The Ethics Counselor of the Corporation shall review each statement of employment and financial interests submitted under §905.735–402 or §905.735–403, except his own and those statements of special Government employees who file with the Chairman of the Civil Service Commission. When review discloses a conflict between the interests of an employee or special Government employee of the Corporation and the performance of his services for the Corporation, the Ethics Counselor shall bring the conflict to the attention of the employee or special Government employee, grant the individual an opportunity to explain the conflict, and attempt to resolve it. If the conflict cannot be resolved, the Ethics Counselor shall forward a written report on the conflict to the Chairman, recommending appropriate action. The Chairman shall review the report, solicit an explanation from the individual, and seek resolution of the conflict.

§905.735–108 Remedial and disciplinary action.

(a) In addition to any penalties prescribed by law, the Chairman, after review and consideration of any explanation given by an employee or special Government employee concerning a conflict of interest, may institute appropriate remedial action to resolve or otherwise eliminate the conflict. Appropriate remedial action may include, but is not limited to:

(1) Divestment by the employee or the special Government employee of the conflicting interest;

(2) Disqualification of the individual from a particular assignment;

(3) Changes in the assigned duties of the individual; or

(4) Disciplinary action.

(b) Where the situation warrants some form of disciplinary action, the Chairman may choose from a wide range including a warning or reprimand, suspension, reduction in grade or pay, or termination of employment. The disciplinary action selected should reflect the character and degree of the offense which demands such action and

should be reasonable in light of that offense.

(c) Remedial action, whether disciplinary or otherwise, shall be effected in accordance with applicable laws, Executive orders, and regulations.

Subpart B—Conduct and Responsibilities of Employees

§ 905.735–201 General standards of conduct.

(a) All employees shall conduct themselves on the job so as to efficiently discharge the work of the Corporation. Courtesy, consideration, and promptness are to be observed in dealing with the public, Congress, and other governmental agencies.

(b) All employees shall conduct themselves off the job so as not to reflect adversely upon the Corporation or the Federal service.

(c) Employee conduct shall exemplify the highest standards of integrity. Employees shall avoid any action, whether or not specifically prohibited by this part, which might result in, or create the appearance of:

(1) Using public office for private gain;

(2) Giving preferential treatment to any person;

(3) Impeding Government efficiency or economy;

(4) Losing complete independence or impartiality;

(5) Making a Government decision outside official channels; or

(6) Affecting adversely the confidence of the public in the integrity of the Government.

§ 905.735–202 Gifts, entertainment, and favors.

Pursuant to paragraph (b) of 5 CFR 735.202, the following exceptions to the restriction of paragraph (a) of that section are authorized. Employees may:

(a) Accept gifts and other things of value under circumstances which arise from an obvious family or personal relationship(s) (such as between the parents, children, or spouse of the employee and the employee), when the circumstances make it clear that it is those relationships rather than the business of the persons concerned which are the motivating factors;

(b) Accept food and refreshments of nominal value on infrequent occasions in the ordinary course of a luncheon, dinner, or other meeting, or on an inspection tour where an employee may properly be in attendance;

(c) Accept loans from banks or other financial institutions on customary terms to finance proper and usual activities of employees, such as home purchase;

(d) Accept unsolicited advertising or promotional materials, such as pens, pencils, note pads, calendars and other items of nominal intrinsic value;

(e) Participating without payment in privately funded activities in the Washington metropolitan area if: (1) An invitation is addressed to the Chairman or Executive Director of the Corporation and approved by either of them; (2) no provision for individual payment is readily available; and (3) the activities are limited to ceremonies of interest to both the local community and the Corporation (such as ground breakings or openings), or are sponsored or encouraged by the Federal or District Government as a matter of policy; and,

(f) Participate in widely attended lunches, dinners, and similar gatherings sponsored by industrial, commercial, technical and professional associations, or groups, for discussion of matters of interest both to the Corporation and the public. Participation by an employee at the host's expense is appropriate if the host is an association or group and not an individual.

§ 905.735–203 Outside employment and other activity.

As provided in 5 CFR 735.203, an employee of the Corporation may engage in outside employment or other outside activity not incompatible with the full and proper discharge of the duties and responsibilities of his Government employment. An employee who proposes to engage in outside employment shall report that fact in writing to his supervisor prior to undertaking such employment.

§ 905.735–204 Disclosure of information.

(a) Every employee who is involved in the development, maintenance or

use of Corporation records containing information about individuals shall familiarize himself with the requirements and penalties of the Privacy Act of 1974 (5 U.S.C. 552a) and Corporation regulations (36 CFR part 903) promulgated thereunder concerning the utilization of and access to such records.

(b) Every employee is directed to cooperate to the fullest extent possible in discharging the requirement of the Freedom of Information Act (5 U.S.C. 522) and Corporation regulations promulgated thereunder (36 CFR part 902). Every effort should be made to furnish service with reasonable promptness to persons who seek access to Corporation records and information.

§ 905.735–205 Purchase of Government-owned property.

Employees of the Corporation and members of their immediate families may purchase Government-owned personal property when it is offered for sale by the General Services Administration or any Federal agency other than the Corporation (41 CFR 101–45.302).

Subpart C—Conduct and Responsibilities of Special Government Employees

§ 905.735–301 General standards of conduct.

(a) Special Government employees of the Corporation shall adhere to applicable regulations adopted under § 904.735–102, except 5 CFR 735.203(b). In addition, the standards of conduct set forth in §§ 905.735–201, 905.735–204, and 905.735–205 shall apply to special Government employees.

(b) Special Government employees of the Corporation may teach, lecture, or write consistent with the provisions of 5 CFR 735.203(c).

(c) Pursuant to 5 CFR 735.305(b), the provisions concerning gifts, entertainment, and favors set forth in § 905.735–202 are hereby made applicable to special Government employees.

Subpart D—Special Standards Applicable to Certain Board Members

§ 905.735–401 Standards.

Section 3(c)(8) of the Pennsylvania Avenue Development Corporation Act of 1972, Pub. L. 92–578, 86 Stat. 1267 (40 U.S.C. 872(c)(8)) specifies that the eight members appointed to the Board by the President from private life, at least four of whom shall be residents of the District of Columbia, ''shall have knowledge and experience in one or more fields of history, architecture, city planning, retailing, real estate, construction or government.'' As a result of these prerequisites for appointment of a private member to the Board of Directors, conflicts could arise for these Board Members as the Corporation proceeds with various development activities. Accordingly, Board Members should perform their responsibilities for the operation and management of the Corporation consistent with these regulations, and other applicable Federal laws and regulations, and consistent with the highest level of fiduciary responsibility.

§ 905.735–402 Advice and determination.

The Corporation's Ethics Counselor is readily available for consultation when a Board Member seeks advice as to the appropriateness of his actions in light of this part, the Executive order, or title 18 U.S.C., chapter 11. A Board Member has an affirmative duty to advise the Ethics Counselor of any potential conflict of interest which may arise with the individual's participation in any particular matter before the Corporation. If advised to do so, the Board Member should submit to the Chairman for determination the question of whether or not the conflict will disqualify the Board Member from participating in the action to be taken by the Corporation. Under the authority delegated to the Chairman pursuant to 18 U.S.C. 208(b), the Chairman may find that the Board Member need not be disqualified from participating in the particular matter, if:

(a) The Board Member makes a full disclosure of the financial interest; and

(b) The Chairman furnishes him with a written determination in advance of the action that the interest is not so substantial as to be deemed likely to affect the integrity of the services which the Government may expect from the Board Member. Requests for similar determinations for conflicts posed by the financial interests of the Chairman himself shall be submitted to the Chairman of the Civil Service Commission.

Subpart E—Statements of Employment and Financial Interests

§ 905.735–501 Form and content of statements.

Statements of employment and financial interests required to be submitted under this subpart by employees and special Government employees shall contain the information required in the formats prescribed by the Civil Service Commission in the Federal Personnel Manual.

§ 905.735–502 Statements of employment and financial interests by employees.

(a) Employees of the Corporation in the following named positions shall prepare and submit statements of employment and financial interests:

(1) Executive Director;

(2) Assistant Director Legal—General Counsel;

(3) Assistant Director/Finance;

(4) Development Director;

(5) Secretary of the Corporation Administrative Officer;

(6) Construction Manager;

(7) Senior Architect/Planner;

(8) Chief, Real Estate Operations;

(9) Any Contracting Officer of the Corporation; and

(10) Any employee classified as a GS–13 or above whose duties and responsibilities are such that the ethics counselor determines a statement should be filed.

(b) Each statement of employment and financial interests required by this section, except that of the General Counsel, shall be submitted to the Ethics Counselor, Office of the General Counsel, Pennsylvania Avenue Development Corporation, 1331 Pennsylvania Avenue, NW., Suite 1220 North, Washington, DC 20004. The General Counsel, as Ethics Counselor, shall submit his statement directly to the Chairman for review.

(c) An employee who believes that his position has been improperly included in this section as one requiring the submission of a statement of employment and financial interests may obtain a review of this determination upon a written request to the Chairman.

[43 FR 60902, Dec. 29, 1978, as amended at 50 FR 45824, Nov. 4, 1985]

§ 905.735–503 Statements of employment and financial interests by special Government employees.

All special Government employees shall submit a statement of employment and financial interest prior to beginning employment or service with the Corporation. Each statement shall be submitted to the Ethics Counselor, Office of the General Counsel, Pennsylvania Avenue Development Corporation, 1331 Pennsylvania Avenue, NW., Suite 1220 North, Washington, D.C. 20004, except that the statements of Board Members appointed from private life shall be filed with the U.S. Civil Service Commission.

[43 FR 60902, Dec. 29, 1978, as amended at 50 FR 45824, Nov. 4, 1985]

§ 905.735–504 Procedures for obtaining statements.

(a) Upon the adopting of the regulations of this part, the Ethics Counselor shall deliver to the incumbent of each position named in § 905.735–402 and to each special Government employee, two copies of the appropriate form for filing a statement of employment and financial interests. An enclosure with the forms shall advise that:

(1) The original of the completed form must be returned in a sealed envelope, marked ''Personal—In Confidence,'' to the Ethics Counselor within the time specified by the Ethics Counselor;

(2) The services of the ethics counselor are available to advise and assist in preparation of the statement;

(3) Any additions or deletions to the information furnished must be reported

in a supplementary statement at the end of the calendar quarter in which the change occurs; or in the case of a special Government employee, at the time the change occurs; and

(4) No later than June 30 of each year, all special Government employees and employees required to file under §905.735–402(a) shall file an annual supplementary statement to update the information previously filed.

(b) The Administrative Officer shall be responsible for assuring that a completed statement of employment and financial interests is obtained from each special Government employee prior to the beginning of employment or service with the Corporation. The Administrative Officer shall promptly forward the statements to the Ethics Counselor for review.

§905.735–505 Confidentiality of statements.

The Ethics Counselor shall hold in confidence each statement of employment and financial interests, and each supplementary statement within his control. Access to or disclosure of information contained in these statements shall not be allowed, except as the Commission or the Ethics Counselor determine for good cause shown, consistent with the Privacy Act of 1974 (5 U.S.C. 552a), and the regulations and pertinent notices of systems of records prepared by the Civil Service Commission and the Corporation in accordance with that Act.

Subpart F—Conduct and Responsibilities of Former Employees—Enforcement

AUTHORITY: 18 U.S.C. 207(j); sec. 6(5), Pub. L. 92–578, 86 Stat. 1270 (40 U.S.C. 875)(5).

§905.737–101 Applicable provisions of law.

Former employees of the Corporation must abide by the provisions of 18 U.S.C. 207 and 5 CFR 737.1 through 737.25, which bar certain acts by former Government employees that may reasonably give the appearance of making unfair use of prior Government employment and affiliations. Violation of those provisions will give rise to Corporation enforcement proceedings as provided in §905.737–102, and may also result in criminal sanctions, as provided in 18 U.S.C. 207.

[48 FR 38233, Aug. 23, 1984]

§905.737–102 Enforcement proceedings.

(a) *Delegation.* The Chairman of the Corporation may delegate his or her authority under this subpart.

(b) *Initiation of disciplinary hearing.* (1) Information regarding a possible violation of 18 U.S.C. 207 or 5 CFR part 737 should be communicated to the Chairman. The Chairman shall promptly initiate an investigation to determine whether there is reasonable cause to believe that a violation has occurred.

(2) On receipt of information regarding a possible violation of 18 U.S.C. 207, and after determining that such information appears substantiated, the Chairman of the Corporation shall expeditiously provide such information, along with any comments or regulations of the Corporation, to the Director of the Office of Government Ethics and to the Criminal Division, Department of Justice. The Corporation shall coordinate any investigation with the Department of Justice to avoid prejudicing criminal proceedings, unless the Department of Justice communicates to the Corporation that it does not intend to initiate criminal prosecution.

(3) Whenever the Corporation has determined after appropriate review, that there is reasonable cause to believe that a former employee has violated 18 U.S.C. 207 or 5 CFR part 737, it shall initiate a disciplinary proceeding by providing the former employee with notice as defined in paragraph (c) of this section.

(4) At each stage of any investigation or proceeding under this section, the Chairman shall take whatever steps are necessary to protect the privacy of the former employee. Only those individuals participating in an investigation or hearing shall have access to information collected by the Corporation pursuant to its investigation of the alleged violation.

(c) *Adequate notice.* (1) The Corporation shall provide the former employee with adequate notice of its intention to

institute a proceeding and an opportunity for a hearing.

(2) Notice to the former employee must include:

(i) A statement of the allegations (and the basis thereof) sufficiently detailed to enable the former employee to prepare an adequate defense;

(ii) Notification of the right to a hearing;

(iii) An explanation of the method by which a hearing may be requested; and

(iv) Notification that if a hearing is not requested within thirty days of receipt of notice, the Corporation will issue a final decision finding the alleged violations to have occurred.

(3) Failure to request a hearing within thirty days of the receipt of notice will be deemed an admission of the allegations contained in the notice and will entitle the Corporation to issue a final decision finding the alleged violations to have occurred.

(d) *Presiding official.* (1) The presiding official at proceedings under this subpart shall be the Chairman, or an individual to whom the Chairman has delegated authority to make an initial decision (hereinafter referred to as *examiner*).

(2) An examiner shall be an employee of the Corporation who is familiar with the relevant provisions of law and who is otherwise qualified to carry out the duties of that position. He or she shall be impartial. No individual who has participated in any manner in the decision to initiate the proceedings may serve as an examiner.

(e) *Time, date and place.* (1) The hearing shall be conducted at a reasonable time, date, and place.

(2) On setting a hearing date, the presiding official shall give due regard to the former employee's need for:

(i) Adequate time to prepare a defense properly; and

(ii) An expeditious resolution of allegations that may be damaging to his or her reputation.

(f) *Hearing rights.* A hearing shall include the following rights:

(1) To represent oneself or to be represented by counsel;

(2) To introduce and examine witnesses and to submit physical evidence;

(3) To confront and cross-examine adverse witnesses;

(4) To present oral argument; and

(5) To receive a transcript or recording of the proceedings, on request.

(g) *Burden of proof.* In any hearing under this subpart, the Corporation has the burden of proof and must establish substantial evidence of a violation.

(h) *Hearing decision.* (1) The presiding official shall make a determination exclusively on matters of record in the proceeding, and shall set forth in the decision all findings of fact and conclusions of law relevant to the matters at issue. If the hearing is conducted by the Chairman, the resulting written determination shall be an initial decision.

(2) Within thirty days of the date of an initial decision, either party may appeal the decision to the Chairman. The Chairman shall base his or her decision on such appeal solely on the record of the proceedings on those portions thereof cited by the parties to limit the issues.

(3) If the Chairman modifies or reverses the initial decision, he or she shall specify such findings of fact and conclusions of law as are different from those of the examiner.

(4) If no appeal is taken from an initial decision within thirty days, the initial decision shall become a final decision.

(i) *Sanctions.* The Chairman shall take appropriate action in the case of any individual who is found to be in violation of 18 U.S.C. 207 or 5 CFR part 737 after a final decision by:

(1) Prohibiting the individual from making, on behalf of any other person except the United States, any formal or informal appearance before, or, with the intent to influence, any oral or written communication to, the Corporation on any matter of business for a period not to exceed five years, which may be accomplished by directing employees of the Corporation to refuse to participate in any such appearance or to accept any such communication; or

(2) Taking other appropriate disciplinary action.

(j) *Judicial review.* Any person found by the Corporation to have participated in a violation of 18 U.S.C. 207 or

5 CFR part 737 may seek judicial review of the determination in an appropriate United States District Court.

[48 FR 38233, Aug. 23, 1984]

PART 906—AFFIRMATIVE ACTION POLICY AND PROCEDURE

Subpart A—Development Program

Sec.
906.1 Purpose and policy.
906.2 Definitions.
906.3 Procedures.
906.4 Formulation of affirmative action plan.
906.5 Administration of affirmative action plan.
906.6 Implementation.
906.7 Incentives.
906.8 Review and monitoring.
906.9 Voluntary compliance.
906.10 Confidentiality.

EXHIBIT A TO PART 906—SUGGESTED MINIMUM GUIDELINES AND GOALS
EXHIBIT B TO PART 906—GUIDELINES FOR ESTABLISHING STRATEGY TO IMPLEMENT AFFIRMATIVE ACTION PERSONNEL PLAN

AUTHORITY: Pennsylvania Avenue Development Corporation Act of 1972, as amended, sec. 6(6), Pub. L. 92–578, 86 Stat. 1270 (40 U.S.C. 875(6)); E.O. 11625 (36 FR 19967) Oct. 14, 1971; title VII Civil Rights Act of 1964 (42 U.S.C. 2000e–2); Rehabilitation, Comprehensive Services, and Developmental Disabilities Amendments of 1978, secs. 119, 122(d)(2), Pub. L. 95–602, 92 Stat. 2982, 2987 (29 U.S.C. 794); E.O. 12138 (44 FR 29637) May 22, 1979.

SOURCE: 44 FR 37226, June 26, 1979, unless otherwise noted.

Subpart A—Development Program

§906.1 Purpose and policy.

(a) One of the objectives stated in the Congressionally approved Pennsylvania Avenue Plan—1974 is insuring that minority businesses, investors, and workers have an opportunity to share in the benefits that will occur as a result of redevelopment. Accordingly, the Corporation will take affirmative action to assure full minority participation in activities and benefits that result from implementation of The Pennsylvania Avenue Plan—1974.

(b) It is the policy of the Pennsylvania Avenue Development Corporation to foster a progessive Affirmative Action Program that affords minorities, women, handicapped persons, and Vietnam era veterans a fair and meaningful share in the opportunities generated by the development activities of the Corporation.

(c) It is mandatory for developers who respond to a solicitation for proposals made by the Corporation to comply with the rules stated in subpart A of part 906.

(d) It is mandatory for developers who receive property interests of ten percent (10%) or more of the area of a development parcel from the Corporation to comply with the rules stated in subpart A of part 906.

(e) The Corporation will encourage any entity not described in paragraphs (c) and (d) of this section to comply with the requirements set forth in this subpart A of part 906.

§906.2 Definitions.

As used in this part:

(a) *Affirmative Action Plan* means a plan which at a minimum includes:

(1) A statement of the affirmative action policy of the development team and a list of the names of the members of the development team including equity investors, and identification of minority owned businesses and investors;

(2) A contracting and purchasing plan;

(3) A leasing plan;

(4) A personnel plan;

(5) An equity investment plan;

(6) The goals, timetables and strategy for achieving the goals of the developer;

(7) A list of specific, quantifiable committed opportunities; and

(8) Designation of an Affirmative Action Officer.

(b) *Committed Opportunity* means an opportunity set aside and committed for the sole involvement of a woman, minority group member, Vietnam era veteran, handicapped person, or minority owned business, including opportunities for training and equity investment.

(c) *Contracting and purchasing plan* means a plan for the subject project which at a minimun includes the following:

(1) A list of all minority enterprises and minority owned businesses that

are involved in the development proposal or its implementation;

(2) An analysis of the types of contracts and purchases that will be required by the development team in order to implement the development through and including operation of the completed development;

(3) A list of goals and timetables by category of purchase or contract for involvement of minority owned businesses in the development process;

(4) Strategy for achieving the goals established; and

(5) A list of committed opportunities for the involvement of minority owned businesses in the development process.

(d) *Developer* means a person partnership, company, corporation, association, or other entity that develops a new structure on a site or substantially renovates a structure on a site within the Corporation's development area where the site either: (1) Has been offered to the public by the Corporation for development, or (2) the Corporation has transferred real property rights that equal or exceed ten percent (10%) of the area of the development parcel.

(e) *Development parcel* is an area of land established by the Corporation to be a minimum developable site under The Pennsylvania Avenue Plan—1974, as amended, and The Planning and Design Objectives, Controls, and Standards of the Corporation (36 CFR part 920 *et seq.*).

(f) *Development team* means the group that submits a proposal to develop a parcel including developers, architects, engineers, lawyers, financial institutions, insurance companies, and others who help formulate, develop, and otherwise make a proposal to the Corporation.

(g) *Equity Investment Plan* means a plan for the subject project which at a minimum includes the following:

(1) A statement as to whether or not equity investment has been or will be solicited to implement the subject project;

(2) A statement as to whether or not a joint venture has been or will be formed to implement the subject project;

(3) If equity investment has been solicited or if a joint venture has been formed, a statement of the efforts made to involve members of minority groups and women when these opportunities were offered;

(4) If equity investment will be solicited, or a joint venture will be formed, a plan to involve members of minority groups and women when these opportunities are offered, including a list of committed opportunities;

(5) A list of goals and a timetable for securing participation of members of minority groups and women in equity investment and joint venture.

(h) *Handicapped person* means any person who: (1) Has a physical or mental impairment that substantially limits one or more of the person's major life activities, (2) has a record of such impairment.

(i) *Leasing plan* means a plan for the subject project which at a mimimum includes the following:

(1) A retail plan showing the types of retail businesses to be included in the project and a plan for the types of uses for the balance of the development;

(2) Goals and methods for inclusion of minority enterprises as tenants in the project;

(3) Committed opportunities for leasing to minority enterprises.

(j) *Minority Enterprise* means any enterprise that is either a minority owned business or a not for profit or non-profit organization (as defined in 26 U.S.C. 501(c)(3) or (c)(6)) and also fulfills one or more of the following criteria:

(1) The Board of Directors or equivalent policy making body is comprised of members, a majority of whom are minorities or women and the chief executive officer of the organization is a minority group member or a woman; or

(2) The objectives of the organization as described in its charter are substantially directed toward the betterment of minorities or women.

(k) *Minority group member* means any *person* residing in the United States who is Negro, Hispanic, Oriental, Native American, Eskimo, or Aleut, as defined below:

(1) Negro—is an individual of the Negro race of African origin;

(2) Hispanic—is an individual who is descended from and was raised in or participates in the culture of Spain,

Portugal, or Latin America, or who has at least one parent who speaks Spanish or Portuguese as part of their native culture;

(3) Oriental—is an individual of a culture, origin, or parentage traceable to the areas south of the Soviet Union, East of Iran, inclusive of the islands adjacent thereto, located in the Pacific including, but limited to, Taiwan, Indonesia, Japan, Hawaii, and the Philippines, together with the islands of Polynesia;

(4) Native American—is an individual having origins in any of the original people of North America, who is recognized as an Indian by either a tribe, tribal organization, or suitable authority in the community. For purposes of this section a suitable authority in the community may be an educational institution, a religious organization, or a state or Federal agency.

(5) Eskimo—is an individual having origins in any of the original peoples of Alaska;

(6) Aleut—is an individual having origins in any of the original peoples of the Aleutian Islands.

(l) *Minority owned business* means a business that is:

(1) A sole proprietorship owned by a minority group member or a woman;

(2) A business entity at least 50 percent of which is owned by minority group members or women;

(3) A publicly owned business at least 51 percent of the stock of which is owned by minority group members or women;

(4) A certified minority owned business as evidenced by a certificate satisfactory to the Corporation's Affirmative Action Officer, and signed by the owner or the executive officer of the minority owned business.

For purposes of this definition, ownership means that the risk of gain or loss and the amount of control exercised must be equivalent to the ownership percentage.

(m) *Personnel plan* means a plan for the subject project which at a minimum includes the following:

(1) An analysis of participation of minority group members, women, Vietnam era veterans, and handicapped persons in the development project including an evaluation by category of employment, i.e., professional and managerial, skilled, semi-skilled, trainee, and other, and the number of employees in each category;

(2) An analysis of the salaries of minority group members, women, handicapped persons, and Vietnam era veterans showing the relative position of these employees with those not covered by the Affirmative Action Plan;

(3) Goals and timetables for employment by category and salary level of minorities, women, Vietnam era veterans, and handicapped persons employed for the development parcel;

(4) Strategy for achieving the goals established (see Exhibit B);

(5) A list of committed opportunities for the employment of minority group members, women, Vietnam era veterans, and handicapped persons.

(n) *Vietnam era veteran* means a person who:

(1) Served on active duty for a period of more than 180 days, any part of which occurred during the Vietnam era, and was discharged or released therefrom with other than a dishonorable discharge; or

(2) Was discharged or released from active duty for a service-connected disability if any part of such active duty was performed during the Vietnam era.

§906.3 Procedures.

(a) Affirmative Action Plans must be submitted to the Corporation at the following times:

(1) At the time a response is submitted to the Corporation's solicitation for proposals, the response must include an Affirmative Action Plan;

(2) If a property right exceeding 10 percent of the area of the development parcel is made available by the Corporation, but without the Corporation having made a solicitation for proposals, the developer must submit an Affirmative Action Plan within 30 days after the start of negotiations with the Corporation.

(b) Affirmative Action Plans will be reviewed as follows:

(1) Each Affirmative Action Plan submitted to the Corporation will be reviewed by the Corporation's Affirmative Action Officer, or his designee.

(2) In the case of a developer who responds to a solicitation for proposals,

the Affirmative Action Plan will be reviewed by the Affirmative Action Officer, and if the Plan is in substantial compliance with the goals set forth in Exhibit A, the Plan and the recommendation of the Affirmative Action Officer will be submitted to the Chairman of the Board for approval prior to the Board's final selection.

(3) In the case of a developer who receives 10 percent or more of the area of a development parcel from the Corporation, the Affirmative Action Plan will be reviewed by the Corporation's Affirmative Action Officer, and if the Plan is in substantial compliance with the goals set forth in Exhibit A, the Plan and the recommendation of the Affirmative Action Officer will be submitted to the Chairman of the Board for approval within 15 days of submission.

(4) The Chairman may approve any Affirmative Action Plan that is not in substantial compliance with the goals set forth in Exhibit A, but for which the developer has documented a genuine effort to meet the goals of the regulations and complied with the spirit of the Corporation's policy.

(5) The Chairman may, in his discretion, submit any Affirmative Action Plan to the Board of Directors for approval, if there is not substantial compliance with the goals set forth in Exhibit A.

(6) The review of the Affirmative Action Plan will determine conformity with The Pennsylvania Avenue Plan—1974, the policy of the Corporation's Board of Directors, and the regulations and guidelines set forth in this subpart A, part 906.

(c) Revisions: (1) The Corporation may require a developer at any time prior to approval of the Affirmative Action Plan to revise the Plan for compliance with the requirements of this subpart.

(2) Each developer required to comply with this subpart must submit for approval an up-dated Affirmative Action Plan at the commencement of construction, at the commencement of occupancy, and at the commencement of operation or management of any portion of the facility by the developer or a related entity. Each revision of the Affirmative Action Plan must address all the requirements set forth in § 906.4.

(3) The Corporation's Affirmative Action Officer will review all revisions submitted to the Corporation. If the revision is a substantial change from the originally approved Plan, the review procedures set forth in paragraph (b) of this section will be applicable. If the revision submitted is not a substantial change from the originally approved Plan, the Corporation's Affirmative Action Officer may approve the revision.

§ 906.4 Formulation of affirmative action plan.

(a) The developer, in formulating the Affirmative Action Plan, should consider all phases of development from establishment of the development team to operation and management of the development project including each component of the project (e.g., hotel, retail, office, residential). The developer should also consider the personnel profile of project contractors, subcontractors.

(b) For each phase and each component, the developer should give consideration to creating business and employment opportunities and committed opportunities in the following:

(1) Equity participation;

(2) Professional and technical services such as legal, architectural, engineering, and financial;

(3) Purchasing materials and supplies in connection with construction and operation;

(4) Contracting for construction, operation, and maintenance; and,

(5) Financing, including construction and permanent financing, and other financial and banking services.

§ 906.5 Administration of affirmative action plan.

(a) The developer shall appoint an Affirmative Action Officer, and for projects exceeding $10 million in cost, the person appointed must have affirmative action as a primary responsibility.

(b) The developer shall report to the Corporation periodically its progress in meeting the goals and timetables in its Affirmative Action Plan with respect to its contracting and purchasing plan,

leasing plan, and committed opportunities. In meeting the reporting requirements the developer shall:

(1) Count an individual only once for reporting purposes;

(2) Count an individual in the first appropriate category as follows:

(i) Minority Group Member;

(ii) Handicapped Person;

(iii) Woman;

(iv) Vietnam Era Veteran;

(3) Report the dollar amount of contracts and purchases from minority owned businesses including subcontracts;

(4) In the event 10 percent or more of the dollar amount of a contract, subcontract, or purchase from a minority owned business is performed by other than a minority owned business, the developer shall report only the dollar amount performed by the minority owned business.

§906.6 Implementation.

(a) Each developer's Affirmative Action Plan will be incorporated into the real estate agreement between the developer and the Corporation.

(b) Each developer shall include a clause requiring a contracting and purchasing plan and a personnel plan in any contract exceeding $500,000.

(c) Each developer should consider including a clause requiring a contracting and purchasing plan and a personnel plan in any contract less than $500,000.

(d) In order that the Corporation may be of assistance, and to the extent practical, the developer shall notify the Corporation's Affirmative Action Officer of any failure to meet the approved Affirmative Action Plan.

(e) The Corporation, at the request of the developer, shall provide the developer with assistance for meeting the goals set forth in the Affirmative Action Plan. Such assistance may be provided in the form of lists of minority enterprises, sources for recruiting and advertising, as well as other available information.

§906.7 Incentives.

(a) At the request of the developer, the Corporation may agree to deferral of a portion of rental, not to exceed 50 percent, during construction and during the first year of operation following construction of any phase of the development project. Allowable rent deferral during the construction phase will be two percent of the total base rent for each one percent of the value of all construction contracts which have been awarded to Minority Owned Businesses, not to exceed 50 percent. Rent deferral during the first year of operation following construction of any phase of the development project will be four percent for each one percent of total equity owned by minority group members, minority owned businesses, and women.

(b) Following review of Affirmative Action reports submitted to the Corporation pursuant to §906.5(b), the Corporation will determine the developer's compliance with the goals set forth in the approved Affirmative Action Plan. Compliance with the goals established in the Plan will be measured by adding the percentages reported including overages in each category and dividing that by the number of categories covered in the Plan.

(c) If 75 percent compliance is not achieved during any rent deferral period, the Corporation will afford the developer 120 days to achieve at least that level of compliance. If, at the end of that 120 day period, 75 percent compliance is not achieved, all rental deferral, together with interest, will be due and payable to the Corporation on the 10th day following receipt of written notice that payment of the deferred rent has been accelerated.

§906.8 Review and monitoring.

The Corporation, either by its employees, consultants, or other government agency, shall analyze and monitor compliance with the developer's approved Affirmative Action Plan. The Corporation shall rely on the reports submitted by the developer. However:

(a) Further investigation by the Corporation may be undertaken if problems are brought to the attention of the Corporation through any reliable source, or if any formal complaints are filed against the developer that relate to performance of the Affirmative Action Plan; and

(b) The Corporation reserves the right to audit the records of the developer that pertain to any report submitted to the Corporation.

§ 906.9 Voluntary compliance.

The Corporation will encourage any individual or entity not described in § 906.1(c) or (d) to submit and adopt an Affirmative Action Plan on any development project for which the Corporation's review and approval is required to determine conformity of the development project with the The Pennsylvania Avenue Plan—1974. Any such Affirmative Action Plan should accompany the development plans.

§ 906.10 Confidentiality.

All information submitted to the Corporation pursuant to this subpart A will be kept confidential, except as availability to the public may be required by the Freedom of Information Act.

Subpart B—[Reserved]

EXHIBIT A TO PART 906—SUGGESTED MINIMUM GUIDELINES AND GOALS

The following are suggested for consideration by developers in formulation of minimum affirmative action goals for the development parcel:

(a) Equity participation—10 percent participation by minority group members, women, and minority owned businesses as investors in ownership of the development parcel.

(b) Contracts for professional and technical services—20 percent of the dollar value of the contracts to minority owned businesses.

(c) Persons providing professional or technical services—20 percent should be minority group members, women, handicapped persons, or Vietnam era veterans.

(d) Construction contracting—15 percent of the total dollar value to minority owned businesses. (In order to accomplish this goal, the developer must require that any prime contractor show at least 15 percent minority subcontractors unless the prime contractor is a minority contractor.)

(e) Construction employment should comply with the Washington Plan as a minimum.

(f) Purchasing—20 percent of the dollar value of all purchases of materials and supplies to minority owned businesses.

(g) Hotel employment—20 percent of all hotel employees, 15 percent of all personnel earning an excess of $2,000 a month (in 1978 dollars), and 60 percent of trainees for hotel positions should be minority group members, women, handicapped persons, or Vietnam era veterans.

(h) Leasing of space—15 percent of the retail space should be targeted for minority enterprises.

(i) Committed opportunities—should be created for professional, technical, construction, hotel, or other type operations where the representation of minority group members, women, or handicapped persons in a field is inconsistent with the demographic profile of the Washington metropolitan area.

EXHIBIT B TO PART 906—GUIDELINES FOR ESTABLISHING STRATEGY TO IMPLEMENT AFFIRMATIVE ACTION PERSONNEL PLAN

The following are suggested as the types of activities to be considered in the development of strategies for the affirmative action personnel plan:

(1) ''Vigorous'' searching for qualified minority and women applicants for job openings in professional and managerial positions, often including recruitment visits to educational institutions with large minority or female enrollments.

(2) Wide dissemination of affirmative action policy in advertisements and employment literature.

(3) Utilization of minority media in recruitment advertisements.

(4) Notification of job openings to minority community organizations and associations.

(5) Listing of all employment openings with compensation of under $20,000 per year at a local office of the State Employment Service (or union hiring hall when union labor is required).

(6) Periodic review of minority, female, Vietnam era veteran, and handcapped employees to identify underutilized and unutilized skills and knowledge as well as opportunities for reassignment.

(7) Utilization of merit promotion and on-the-job training programs to create career ladders or otherwise qualify minority, female, Vietnam era veteran, and handicapped employees for advancement.

PART 907—ENVIRONMENTAL QUALITY

Sec.
907.1 Policy.
907.2 Purpose.
907.3 Definitions.
907.4 Designation of responsible Corporation official.
907.5 Specific responsibilities of designated Corporation official.
907.6 Major decision points.
907.7 Determination of requirement for EIS.

907.8 Actions that normally require an EIS.
907.9 Preparation of an EIS.
907.10 Categorical exclusions.
907.11 Actions that normally require an environmental assessment.
907.12 Preparation of an environmental assessment.
907.13 Public involvement.
907.14 Corporation decision making procedures.
907.15 Approval of private development proposals.
907.16 Actions where lead agency designation is necessary.

APPENDIX A TO PART 907

AUTHORITY: 40 U.S.C. 875(8); 42 U.S.C. 4321.

SOURCE: 47 FR 8768, Mar. 2, 1982, unless otherwise noted.

§907.1 Policy.

The Pennsylvania Avenue Development Corporation's policy is to:

(a) Use all practical means, consistent with the Corporation's statutory authority, available resources, and national policy, to protect and enhance the quality of the human environment;

(b) Ensure that environmental factors and concerns are given appropriate consideration in decisions and actions by the Corporation;

(c) Use systematic and timely approaches which will ensure the integrated use of the natural and social sciences and environmental design arts in planning and decision making which may have an impact on the human environment;

(d) Develop and utilize ecological and other environmental information in the planning and development of projects implementing the Plan;

(e) Invite the cooperation and encourage the participation, where appropriate, of Federal, District of Columbia, and regional authorities and the public in Corporation planning and decision-making processes, which affect the quality of the human environment; and

(f) Minimize any possible adverse effects of Corporation decisions and actions upon the quality of the human environment.

§907.2 Purpose.

These regulations are prepared to supplement Council on Environmental Quality Regulations for implementing the procedural provisions of the National Environmental Policy Act of 1969, as amended, and describe how the Pennsylvania Avenue Development Corporation intends to consider environmental factors and concerns in the Corporation's decision making process.

§907.3 Definitions.

(a) *CEQ Regulations* means the regulations for implementing the procedural provisions of the National Environmental Policy Act of 1969 as promulgated by the Council on Environmental Quality, Executive Office of the President, appearing at 40 CFR parts 1500–1509 (43 FR 55978–56007) and to which this part is a supplement.

(b) *The Act of October 27, 1972* or *Act* means the Pennsylvania Avenue Development Corporation Act of 1972, Pub. L. 92–578, October 27, 1972, 86 Stat. 1266 (40 U.S.C. 871).

(c) *The Plan* means the Pennsylvania Avenue Plan—1974, prepared by the Pennsylvania Avenue Development Corporation pursuant to the Act of October 27, 1972.

(d) *The Corporation* means the Pennsylvania Avenue Development Corporation, a wholly owned government corporation of the United States created by the Act of October 27, 1972.

(e) *Board of Directors* means the governing body of the Corporation in which the powers and management of the Corporation are vested by the Act of October 27, 1972.

(f) *EIS* means an environmental impact statement as defined in §1508.11 of the CEQ Regulations.

(g) *Final EIS* means The Final Environmental Impact Statement, dated September 1974, prepared by the Corporation on The Pennsylvania Avenue Plan—1974.

(h) *Development Area* means the area under the Corporation's jurisdiction as specified in section 2(f) of the Act of October 27, 1972 and for which The Plan has been prepared and will be implemented by the Corporation.

(i) *Decision Maker* means the Board of Directors, unless a delegation to the Chairman, a member or committee of the Board of Directors, or the Executive Director has been made by the Bylaws of the Corporation, a resolution of the Board of Directors, or an appropriate written delegation of authority.

(j) *Private Developer* means an individual, firm, joint venture, or other entity other than the Corporation which seeks to construct, reconstruct, rehabilitate, or restore real property within the development area.

(k) Other terms used in this part are defined in 40 CFR part 1508 of the CEQ Regulations.

§ 907.4 Designation of responsible Corporation official.

The Development Director is the Corporation official responsible for implementation and operation of the Corporation's policies and procedures on environmental quality and control.

§ 907.5 Specific responsibilities of designated Corporation official.

(a) Coordinate the formulation and revision of Corporation policies and procedures on matters pertaining to environmental protection and enhancement.

(b) Establish and maintain working relationships with relevant government agencies concerned with environmental matters.

(c) Develop procedures within the Corporation's planning and decisionmaking processes to ensure that environmental factors are properly considered in all proposals and decisions in accordance with this part.

(d) Develop, monitor, and review the Corporation's implementation of standards, procedures, and working relationships for protection and enhancement of environmental quality and compliance with applicable laws and regulations.

(e) Monitor processes to ensure that the Corporation's procedures regarding consideration of environmental quality are achieving their intended purposes.

(f) Advise the Board of Directors, officers, and employees of the Corporation of technical and management requirements of environmental analysis, of appropriate expertise available, and, with the assistance of the Office of the General Counsel, of relevant legal developments.

(g) Monitor the consideration and documentation of the environmental aspects of the Corporation's planning and decisionmaking processes by appropriate officers and employees of the Corporation.

(h) Ensure that all environmental assessments and, where required, all EIS's are prepared in accordance with the appropriate regulations adopted by the Council on Environmental Quality and the Corporation, and are submitted with all proposed legislation.

(i) Consolidate and transmit to appropriate parties the Corporation's comments on EIS's and other environmental reports prepared by other agencies.

(j) Acquire information and prepare appropriate reports on environmental matters required of the Corporation. Information collection activities will be conducted in accordance with the Paperwork Reduction Act of 1980 and approval of OMB will be obtained prior to commencing such activities.

(k) Coordinate Corporation efforts to make available to other parties information and advice on the Corporation's policies for protecting and enhancing the quality of the environment.

§ 907.6 Major decision points.

(a) The possible environmental effects of a proposed action or project must be considered along with technical, economic, and other factors throughout the decisionmaking process. For most Corporation projects there are three distinct stages in the decision making process:

(1) Conceptual or preliminary stage;

(2) Detailed planning or final approval stage;

(3) Implementation stage.

(b) Environmental review will be integrated into the decision making process of the Corporation as follows:

(1) During the conceptual or preliminary approval study stage, the responsible Corporation official shall determine whether the proposed action or project is one which is categorically excluded, requires an environmental assessment or an EIS.

(2) Prior to proceeding from the conceptual or preliminary approval stage to the detailed planning or final approval stage, an environmental assessment and the determination as to whether an EIS is required must be completed.

(3) An EIS, if determined necessary, must be completed and circulated prior to the decision to proceed from the detailed planning stage to implementation.

§907.7 Determination of requirement for EIS.

Determining whether to prepare an environmental impact statement is the first step in applying the NEPA process. In deciding whether to prepare an environmental impact statement, the responsible Corporation official will determine whether the proposal is one that:

(a) Normally requires an environmental impact statement.

(b) Normally does not require either an environmental impact statement or an environmental assessment (categorical exclusion).

(c) Normally requires an environmental assessment, but not necessarily an environmental impact statement.

§907.8 Actions that normally require an EIS.

PADC shall perform or have performed an environmental assessment to determine if a proposal requires an environmental impact statement. However, it may be readily apparent that a proposed action will have a significant impact on the environment; in such cases, an environmental assessment is not required and PADC will immediately begin to prepare or have prepared the environmental impact statement. To assist in determining if a proposal or action normally requires the preparation of an environmental impact statement, the following criteria and categories of action are provided.

(a) *Criteria*. Criteria used to determine whether or not actions or proposals may significantly affect the environment and therefore require an environmental impact statement are described in 40 CFR 1508.27 of the CEQ Regulations and as follows:

(1) Buildings or facades designated for retention in the Plan will be adversely affected by the proposal or action.

(2) Traffic generated by the proposal or action would represent a substantial increase over the traffic projections assessed in the Final EIS in the average daily traffic volume on avenues and streets within the Development Area or its environs;

(3) Air quality in the Development Area and its environs would be substantially affected by the proposal or action based upon the District of Columbia's adopted standard for hydrocarbons and carbon monoxide;

(4) Solid waste disposal generated by a project of the Corporation or of a developer who is constructing, reconstructing, or rehabilitating that project, would have an adverse effect on the capacity of the relevant solid waste disposal facility and compliance with ''Solid Waste Management Guidelines'' of the U.S. Environmental Protection Agency and related local and regional controls;

(5) Public utilities have insufficient capacity to provide reliable service to a project within the Development Area; and

(6) A project will be inconsistent with major elements of the Zoning Regulations of the District of Columbia as they are applicable to the Development Area.

(b) *Categories of action*. The following categories of action normally require an environmental impact statement:

(1) Amendments or supplements to the Plan that constitute a ''substantial change'' to the Plan as defined in 40 U.S.C. 874(c) of the Act.

(2) Acquisition or disposal of real property by the Corporation *not* related to any specific decision, plan, or program adopted by the Board of Directors of the Corporation for which an environmental assessment or an assessment and an EIS has been prepared.

(3) Legislative proposals made to Congress.

(4) Funding and/or construction by the Corporation or its agents or representatives of any building, if that activity is not consistent with the Plan and the Final EIS.

§907.9 Preparation of an EIS.

(a) *Notice of intent*. When PADC decides to prepare an environmental impact statement, it shall publish a notice of intent in the FEDERAL REGISTER in accordance with 40 CFR 1501.7 and 1508.22 of the CEQ Regulations.

(b) *Preparation.* After determining that an environmental impact statement will be prepared and publishing the notice of intent, PADC will begin to prepare or have prepared the environmental impact statement. Procedures for preparing the environmental impact statement are set forth in 40 CFR part 1502, CEQ Regulations.

(c) *Supplemental environmental impact statements.* PADC may supplement a draft or final environmental impact statement at any time. PADC shall prepare a supplement to either the draft or final environmental impact statement when (1) substantial changes are proposed to an action contained in the draft or final EIS that are relevant to environmental concerns or there are significant new circumstances or information relevant to environmental concerns and bearing on the proposed action or its impacts; or (2) actions are proposed which relate or are similar to other action(s) taken or proposed and that together will have a cumulatively significantly impact on the environment.

§ 907.10 Categorical exclusion.

The CEQ Regulations provide for the categorical exclusion (40 CFR 1508.4) of actions that do not individually or cumulatively have a significant effect on the human environment. Therefore, neither an environmental assessment nor an environmental impact statement is required for such actions.

(a) *Criteria.* Criteria used to determine those categories of action that normally do not require either an environmental impact statement or an environmental assessment include:

(1) The action or proposal is consistent with the Plan or the Act, and the environmental effects have been previously analyzed in the Final EIS, a supplement thereto, or in an environmental assessment or an EIS previously prepared; or

(2) The total estimated cost directly attributable to the action or proposal does not exceed $500,000; or

(3) The action or proposal is related solely to internal administrative operations of the Corporation.

(b) *List of categorical exclusions.* Categories of action, identified in appendix A (attached) have been determined by PADC to have no significant effect on the human environment and are therefore categorically excluded from the preparation of environmental impact statements and environmental assessments.

(c) *Changes to the list of categorical exclusion.* (1) The PADC List of Categorical Exclusion will be continually reviewed and refined as additional categories are identified and as experience is gained in the categorical exclusion process.

(2) Additional categories of exclusion identified will be submitted to the Chairman of the Board of Directors for review and approval, and for amendments to this part, following public comment and review by the Council on Environmental Quality.

§ 907.11 Actions that normally require an environmental assessment.

If a proposal or action is not one that normally requires an environmental impact statement, and does not qualify for categorical exclusion, PADC will prepare or have prepared an environmental assessment.

(a) *Criteria.* Criteria used to determine those categories of action that normally require an environmental assessment, but not necessarily an environmental impact statement, include:

(1) Potential for minor degradation of environmental quality;

(2) Potential for cumulative impact on environmental quality; and

(3) Potential for impact on protected resources.

(b) *Categories of action.* The following categories of action normally require the preparation of an environmental assessment.

(1) Amendments to the Plan that do not constitute a ''substantial change'' to the Plan.

(2) Regulations promulgated by the Corporation that have significant environmental impact on the public or persons residing in the development area including businesses.

(3) Development proposals submitted to the Corporation by private developers that are consistent with the Plan and General Guidelines prepared by the Corporation.

(4) Activities related to the Public Improvements Program of the Corporation for which no previous environmental assessment or EIS has been prepared.

(5) Contracts, work authorizations, and master agreements related to and implementing programs, policies, and proposals not categorically excluded and for which no environmental assessments or for which no environmental assessment and EIS have been previously prepared.

(6) Street closures and other rearrangements of public space which were not covered in the Plan or the Final EIS.

(7) Acquisition/disposal of personal property by the Corporation not related to any specific decision, plan, or program adopted by the Board of Directors of the Corporation for which an environmental assessment or an environmental assessment and an EIS is required to be prepared.

(8) Proposed construction of any public building within the development area by any executive agency of the United States Government, any agency or department of the District of Columbia Government, or any other public or quasi-public entity.

§907.12 Preparation of an environmental assessment.

(a) *When to prepare.* PADC will begin the preparation of an environmental assessment as early as possible after it is determined by the responsible corporation official to be required. PADC may prepare an environmental assessment at any time to assist planning and decision-making.

(b) *Content and format.* An environmental assessment is a concise public document used to determine whether to prepare an environmental impact statement. An environmental assessment aids in complying with the Act when no environmental impact statement is necessary, and it facilitates the preparation of an environmental impact statement, if one is necessary. The environmental assessment shall contain brief discussions of the following topics:

(1) Purpose and need for the proposed action.

(2) Description of the proposed action.

(3) Alternatives considered, including the No Action alternative.

(4) Environmental effects of the proposed action and alternative actions.

(5) Listing of agencies, organizations or persons consulted.

(6) In preparation of the environmental assessment, the most important or significant environmental consequences and effects on the areas listed below should be addressed. Only those areas which are specifically relevant to the particular proposal should be addressed. Those areas should be addressed in as much detail as is necessary to allow an analysis of the alternatives and the proposal. The areas to be considered are the following:

(i) Natural/ecological features (such as floodplain, wetlands, coastal zones, wildlife refuges, and endangered species);

(ii) Air quality;

(iii) Sound levels;

(iv) Water supply, wastewater treatment and water runoff;

(v) Energy requirements and conservation;

(vi) Solid waste;

(vii) Transportation;

(viii) Community facilities and services;

(ix) Social and economic;

(x) Historic and aesthetic; and

(xi) Other relevant factors.

(c) *Finding of no significant impact.* If PADC completes an environmental assessment and determines that an environmental impact statement is not required, then PADC shall prepare a finding of no significant impact. The finding of no significant impact shall be made available to the public by PADC as specified in 40 CFR 1506.6 of the CEQ Regulations.

§907.13 Public involvement.

Interested persons may obtain information concerning any pending EIS or any other element of the environmental review process of the Corporation by contacting the Public Information Officer of the Corporation, 1331 Pennsylvania Avenue, NW, Suite 1220

North, Washington, DC 20004, telephone (202) 566–1218.

[47 FR 8768, Mar. 2, 1982, as amended at 50 FR 45824, Nov. 4, 1985]

§ 907.14 Corporation decision making procedures.

To ensure that at major decision making points all relevant environmental concerns are considered by the Decision Maker, the following procedures are established.

(a) An environmental document, i.e., the EIS, Environmental Assessment, Finding of No Signficant Impact, or Notice of Intent, in addition to being prepared at the earliest point in the decision making process, shall accompany the relevant proposal or action through the Corporation's decision making process to ensure adequate consideration of environmental factors.

(b) The decision maker shall consider in its decision making process only those decision alternatives discussed in the relevant environmental documents. Also, where an EIS has been prepared, the decision maker shall consider all alternatives described in the EIS. A written record of the consideration of alternatives during the decision making process shall be maintained.

(c) Any environmental document prepared for a proposal or action shall be made part of the record of any formal rulemaking by the Corporation.

§ 907.15 Approval of private development proposals.

(a) Each development proposal submitted by a private developer to the Corporation for its approval, unless categorically excluded, shall require, at a minimum, an environmental assessment.

(b) The Board of Directors may not take any approval action on a submitted development proposal of a private developer until such time as the appropriate environmental review has been prepared and submitted to the Board of Directors.

(c) At a minimum, and as part of any submission made by a private developer to the Board of Directors for its approval, a private developer shall make available data and materials concerning the development proposal sufficient to permit the Corporation to carry out its responsibilities on environmental review. When requested, the developer shall provide additional information that the Corporation believes is necessary to permit it to satisfy its environmental review functions.

(d) As part of a development proposal submission, a private developer may submit an environmental assessment on its development proposal.

(e) Where the responsible Corporation official determines that the preparation of an EIS is required, the EIS shall be prepared in accordance with part 1502 of the CEQ Regulations. The responsible Corporation official may set time limits for environmental review appropriate to each development proposal, consistent with CEQ Regulations 40 CFR 1601.8 and 1506.10.

(f) The responsible Corporation official shall at the earliest possible time ensure that the Corporation commences its environmental review on a proposed development project and shall provide to a private developer any policies or information deemed appropriate in order to permit effective and timely review by the Corporation of a development proposal once it is submitted to the Board of Directors for approval. The official shall designate, for the benefit of the developer, staff members of the Corporation to advise the developer with regard to information that may be required in order to accomplish the Corporation's environmental review.

§ 907.16 Actions where lead Agency designation is necessary.

(a) Consistent with CEQ Regulations, § 1501.5, where a proposed action by the Corporation involves one or more other Federal agencies, or where a group of actions by the Corporation and one or more other Federal agencies are directly related to each other because of their functional interdependence or geographical proximity, the Corporation will seek designation as lead agency for those actions that directly relate to implementation of the Plan and those actions that relate solely to the Development Area.

(b) For an action that qualifies as one for which the Corporation will seek

designation as lead agency, the Corporation will promptly consult with the appropriate Federal agencies such as the National Capital Planning Commission, the Department of the Interior, and the General Services Administration to establish lead agency and cooperating agency designations.

APPENDIX A TO PART 907

(a) Specific Corporation actions categorically excluded from the requirements for environmental assessment and an EIS are:

(i) Personnel actions;

(ii) Administrative actions and operations directly related to the operation of the Corporation (e.g., purchase of furnishings, services, and space acquisition for the Corporation offices);

(iii) Property management actions related to routine maintenance, operation, upkeep, etc., of real property owned by the Corporation;

(iv) Review of permit applications relating to minor development activities in the Development Area (sign approval, interior renovations, minor exterior changes to facade, etc.);

(v) Promulgation of development general and square guidelines that implement the Plan as covered by the Final EIS;

(vi) Contracts, work authorizations, procurement actions directly related to and implementing proposals, programs, and master agreements for which an environmental assessment or an environmental assessment and an EIS have been prepared, or which are related to administrative operation of the agency;

(vii) Acquisition/disposal by lease, easement, or sale of real and personal property owned by the Corporation subsequent to and implementing a prior decision of the Board of Directors for which an environmental assessment or an assessment and an EIS were prepared;

(viii) Activities directly related to and implementing the Public Improvements Program of the Corporation approved by the Board of Directors, and which are covered by a previously prepared environmental assessment or an environmental assessment and an EIS;

(ix) Demolition actions preparatory for development by the Corporation, other public agencies, or private developers subsequent to approval of development proposals made by the Board of Directors;

(x) Development proposal identical to the requirements of the Plan and which was included in an EIS previously prepared.

(b) An action which falls into one of the above categories may still require the preparation of an EIS or environmental assessment if the designated corporation official determines it meets the criteria stated in §907.8(a) or involves extraordinary circumstances that may have a significant environmental effect.

PART 908—POLICY AND PROCEDURES TO FACILITATE THE RETENTION OF DISPLACED BUSINESSES AND RESIDENTS IN THE PENNSYLVANIA AVENUE DEVELOPMENT AREA

Subpart A—General

Sec.
908.1 Policy.
908.2 Purpose.
908.3 Definitions.

Subpart B—Preferential Right To Relocate

908.10 Criteria for Qualified Persons.
908.11 List of Qualified Persons.
908.12 Retention on the List of Qualified Persons.
908.13 Rights of Qualified Persons.
908.14 Requirements placed on developers that have acquired or leased real property from the Corporation.
908.15 Requirements placed on developers that have not acquired or leased real property from the Corporation.

Subpart C—[Reserved]

Subpart D—Review Procedure

908.30 Request for review.
908.31 Time for filing request for review.
908.32 Review procedures.
908.33 Final determination.

AUTHORITY: 40 U.S.C. 874(e); 40 U.S.C. 875(8); 40 U.S.C. 877(d).

SOURCE: 48 FR 55459, Dec. 13, 1983, unless otherwise noted.

Subpart A—General

§908.1 Policy.

One of the goals of The Pennsylvania Avenue Plan—1974, as amended, (*The Plan*) is the reduction of hardships experienced by businesses and residents within the development area of the Pennsylvania Avenue Development Corporation (*the Corporation*) when they are displaced as a result of implementation of The Plan. It is the policy of the Corporation to provide displaced businesses and residents with a preferential opportunity to relocate within the development area so that they may

share in the benefits brought to the area by the implementation of The Plan. This rule shall not be construed to affect the eligibility, rights or responsibilities of persons who may be entitled to benefits provided under the Uniform Relocation Assistance and Real Property Acquisition Policies Act of 1970 as implemented by the Corporation (36 CFR part 904).

§ 908.2 Purpose.

The purpose of this rule is to:

(a) Provide a meaningful opportunity to businesses displaced by the Corporation's program to return to, or remain in, the Development Area;

(b) Establish procedures and requirements for displaced occupants by which they may establish and later exercise their preferential right to return to the Development Area;

(c) Establish procedures which the Corporation and private Developers must follow in providing Qualified Persons with the opportunity to obtain their preferential right to return to the Development Area.

§ 908.3 Definitions.

The following definitions shall apply to this part:

(a) *Developer* means a Person or team of Persons that has received preliminary approval for a development proposal or has been designated by the Corporation as Developer pursuant to a development competition.

(b) *Development Area* means the area described in section 2 (f) of Pub. L. 92–578, October 27, 1972, as amended (40 U.S.C. 871 (f)), and for which the Plan has been prepared and will be implemented by the Corporation.

(c) *List* means the List of Qualified Persons maintained by the Corporation as provided in § 908.11(a) of this rule.

(d) *Newly developed space* means any leaseable part of a new building in the Development Area upon which construction was commenced after October 27, 1972 or an existing building in the Development Area which after October 27, 1972 underwent substantial remodeling, renovation, conversion, rebuilding, enlargement, extension or major structural improvement, but not including ordinary maintenance or remodeling or changes necessary to continue occupancy.

(e) *Person* means a partnership, company, corporation, or association as well as an individual or family, but does not include a department, agency, or instrumentality of any Federal, state, or local government.

(f) *Previous location* means the space from which the Eligible Person was or is being displaced as a result of the Corporation's or Developer's acquisition of real property, or as a result of receiving a written order to vacate from the Corporation.

Subpart B—Preferential Right To Relocate

§ 908.10 Criteria of Qualified Person.

Qualified Person is either

(a) A Person whose place of business or residence was located in the Development Area and was displaced from its location by:

(1) The Corporation in connection with the acquisition of fee title, or a lesser interest, in the real property containing such business or residence; or

(2) A Developer in implementing a development project in accordance with the Plan; or

(b) A Person whose place of business or residence is located in the Development Area and who has received notice of initiation of negotiations by the Corporation for purchase of the real property containing such business or residence.

§ 908.11 List of Qualified Persons.

(a) The Corporation shall develop and maintain a List of Qualified Persons who meet the criteria of Qualified Person as defined in § 908.10 and who ask to be placed on that list.

(b) The Corporation shall notify each occupant displaced by development provided an address is available to the Corporation, of this policy and the procedures to be followed for placement on the List.

(c) A person who wishes to be included on the List shall notify the Corporation in writing to that effect. The notice to the Corporation shall include:

(1) The address of the Previous Location;

(2) A short statement indicating the nature of the Qualified Person's occupancy;

(3) The amounts and type of space occupied prior to displacement;

(4) A description of any specialized equipment or unusual requirements for occupancy; and

(5) A copy of the notice to vacate from the Developer or notice of initiation of negotiations from the Corporation if either of these was received by the Qualified Person.

(d) The Corporation shall:

(1) Review the information furnished by the Person including any notice;

(2) Request additional information, if necessary to make a determination of the Person's qualifications;

(3) Determine whether the Person is qualified to be listed, and if so place the Person on the list; and

(4) Notify the Person of its determination.

(e) The Corporation urges that any Person who wishes to be placed on the List request such placement as soon as the Person meets the criteria for Qualified Person established in §908.10, and all Persons are encouraged to do so no later than one year of the time the Person is displaced in order to increase the opportunity to obtain Newly Developed Space. However, no Person shall be denied placement on the List because such placement was not requested within one year of displacement.

§908.12 Retention on the List of Qualified Persons.

(a) Once placed on the List, the Corporation shall keep a Person on the List until:

(1) The Corporation receives a written request from the Qualified Person to be removed from the List;

(2) The Qualified Person is relocated into or has a binding lease commitment for Newly Developed Space;

(3) The Qualified Person sells, transfers, or merges its interest in the displaced business, unless after such change in ownership Qualified Persons have at least fifty-one percent of the interest in the resulting business; or

(4) The Corporation receives a mailing returned from the Post Office that the Person is not located at the known address and left no forwarding address, provided that the Corporation shall reinstate any such removed name if the Person provides the Corporation with a current address; or

(5) The Corporation ceases operations upon completion of the Plan.

(b) A Qualified person relocated into newly developed space, may only again be placed on the List:

(1) If another branch of its business is subsequently displaced from space within the Development Area which is not Newly Developed Space; and

(2) If all requirements of §908.10 of the rule are met with regard to the subsequent displacement.

§908.13 Rights of Qualified Persons.

(a) As provided in §§908.14(c) and 908.15(b), each Qualified Person on the List shall receive notices of opportunities to occupy Newly Developed Space as opportunities become available.

(b) As provided in §§908.14(d) and 908.15(c), each Qualified Person on the List shall be notified of any subsequent changes in the leasing plan which are, in the Corporation's opinion, major.

(c) Each Qualified Person on the List, who is interested in negotiating for occupancy of Newly Developed Space shall, within two weeks after receiving notice of a tenanting opportunity, provide written notice of its interest in the tenanting opportunity to the Developer, and furnish a copy of the written notice to the Corporation.

(d) Each Qualified Person on the List who provides a written notice of interest shall have ninety days following the Developer's receipt of the notice of interest for exclusive negotiations with the Developer for occupancy of the Developer's Newly Developed Space. During the ninety day period the Developer, subject to §§908.14 and 908.15 of this rule, shall not negotiate tenanting opportunities for the same Newly Developed Space requested by the Qualified Person with other than Qualified Persons.

(e) A Qualified Person's opportunity to occupy Newly Developed Space shall not be limited to the square on which its previous location was situated but extends throughout the Development Area. Similarly, no Qualified Person has an absolute right to return to the

square where previous location was situated.

(f) A Qualified Person's opportunity to occupy space may be exercised in the Development Area at any time during the Corporation's existence, but such opportunity may only be exercised within Newly Developed Space.

(g) A Qualified Person has one opportunity to occupy Newly Developed Space for each location in the Development Area from which it is displaced.

(h) The Corporation cannot assure any Qualified Person that it will be relocated to Newly Developed Space.

§ 908.14 Requirements placed on developers that have acquired or leased real property from the Corporation.

Developers who have acquired or leased real property from the Corporation shall:

(a) Notify the Corporation, within six months of the approval of the Developer's building permit, of its leasing plan and when it intends to begin seeking tenants. The Developer shall include at least the following in its leasing plan:

(1) The mix of uses and estimated square footage for each use;

(2) The rentals to be charged by type of use and location;

(3) The terms and conditions to be included in the leases, including financial participation;

(4) The selection criteria to be used by either the Developer or its agents; and

(5) The projected completion and occupancy dates.

(b) Notify the Corporation of any changes in the Developer's leasing plan.

(c) Send registered letters to all Qualified Persons on the List notifying them that the developer is seeking tenants and advising them that they have two weeks to provide the developer with written notice of their interest and ninety days thereafter for exclusive negotiations. This letter shall include a description of the mix of uses in the project, the rentals to be charged by type of use and location, the terms and conditions to be included in leases, the projected completion and occupancy dates, and the selection criteria to be used to choose tenants. The Developer will furnish the Corporation with an enumeration of the Qualified Persons it has notified and a copy of the letter and any attachments sent.

(d) Notify in writing each Qualified Person whom the Developer has previously contacted of changes in the Developer's leasing plan which the Corporation determines are major.

(e) Provide a ninety day period for exclusive negotiations with Qualified Persons, said period to commence with the timely receipt by the Developer of the written notice of interest from the Qualified Person. During this period the Developers shall:

(1) Negotiate tenanting opportunities only with Qualified Persons who have notified the Developer of their interest in the opportunity;

(2) Not seek other potential tenants or negotiate agreements to occupy the Newly Developed Space requested by Qualified Persons with anyone other than those Qualified Persons who have timely notified the Developer of their interest in the opportunity, except that a Developer may negotiate agreements with equity partners in the project who will become tenants or with prime tenants; and

(3) Negotiate in good faith with interested Qualified Persons and seek to accommodate them as tenants.

(f) Report to the Corporation at the conclusion of the ninety day period of exclusive negotiations concerning the results of its efforts. In particular the developer shall:

(1) State the number of responses which it received from Qualified Persons;

(2) State the number of Qualified Persons with whom it has reached agreement and the name of each;

(3) State the number of Qualified Persons with whom it is still negotiating and the name of each; and

(4) Describe the Developer's negotiations with each Qualified Person including a summary of each communication between the Developer and each Qualified Person with whom agreement has not been reached, the Developer's best offer to each Qualified Person, the best offer of each Qualified Person to the Developer, and the specific reasons why any Qualified Persons did not meet the selection criteria.

(g) Report to the Corporation quarterly thereafter until the project is fully leased or there are no more Qualified Persons interested in leasing space, whichever first occurs, concerning the results of its nogotiations with Qualified Persons. In particular the Developer shall state:

(1) The number of Qualified Persons with whom it has reached agreement and the name of each;

(2) The percentage of square feet of total leasable space which it has leased to Qualified Persons; and

(3) A description of the Developer's negotiations with each Qualified Person including a summary of each communication between the Developer and each Qualified Person with whom agreement has not been reached, the Developer's best offer to each Qualified Person, the best offer of each Qualified Person to the Developer, and the specific reason why the Developer determines any Qualified Person did not meet its selection criteria.

§908.15 Requirements placed on developers that have not acquired or leased real property from the Corporation.

The Corporation shall encourage Developers that do not acquire or lease real property from the Corporation to lease to Qualified Persons.

(a) While reviewing the Developer's preliminary or final plans, the Corporation shall explore the tenanting opportunities proposed by the Developer and furnish the Developer with the List.

(b) The Corporation shall notify those Qualified Persons on the List who appear to be prospective tenants for the available tenanting opportunities of this tenanting opportunity. To the extent that such information is available to the Corporation, these notices shall specify the mix of uses in the project, the rentals to be charged by type of use and location, the terms and conditions to be included in the leases, the projected completion and occupancy dates and the selection criteria to be used in choosing tenants.

(c) The Corporation shall notify in writing each Qualified Person whom it has previously contacted of changes in the Developer's plan provided the Corporation is informed of the changes and determines the changes are major.

(d) The Corporation shall request that the Developer make every effort to lease space to Persons on the List and to report to the Corporation the names of those Qualified Persons who have reached an agreement with the Developer.

Subpart C—[Reserved]

Subpart D—Review Procedure

§908.30 Request for review.

(a) Any Person aggrieved by a determination concerning placement or retention on the List or any other right under subpart B of this rule, may request that the determination be reviewed.

(b) The applicant's request for review, shall be in writing, shall state the reasons for requesting review, and shall describe the relief sought (including all information the aggrieved person believes to be relevant). The applicant's written request shall be sent to the Director of Real Estate, Pennsylvania Avenue Development Corporation, 1331 Pennsylvania Avenue, NW., Suite 1220 North, Washington, DC 20004.

[48 FR 55459, Dec. 13, 1983, as amended at 50 FR 45824, Nov. 4, 1985]

§908.31 Time for filing request for review.

Any person who files a request for review must do so within one year of the date of the determination for which review is sought.

§908.32 Review procedures.

(a) Upon receipt of a request for review, the Director of Real Estate shall compile all pertinent records maintained on the aggrieved person's application, including the following:

(1) Information on which the original determination was based, including applicable regulations;

(2) Information submitted by the applicant including the request for review and any information submitted in support of the application;

(3) Any additional information the Director of Real Estate considers relevant to a full and fair review of the

application and which he obtains by request, investigation or research.

(b) The Director of Real Estate shall submit the complete file together with a summary of the facts and issues involved in the application to the Chairman of the Board of Directors of the Corporation or his or her designee (*Chairman or designee*) within 30 days of receipt of the request for review.

(c) The Chairman may either review the application or designate one or more persons from the Board of Directors or from outside the Corporation to review the claim. During review the Chairman or designee(s) may consult with the Corporation's Office of General Counsel to obtain advice on legal issues arising from the claim.

§ 908.33 Final determination.

(a) The Chairman or designee(s) shall make a final determination on the claim within 45 days of receipt of the file from the Director of Real Estate. The final determination shall be in the form of Findings of Fact and Conclusions of Law and shall be sent to the aggrieved person and to the Director of Real Estate.

(b) If the applicant is determined to have been aggrieved, the Director of Real Estate shall promptly take appropriate action in accordance with the final determination.

(c) A notice of the right to judicial review shall be sent to the aggrieved person with the final determination.

PART 909—ENFORCEMENT OF NONDISCRIMINATION ON THE BASIS OF HANDICAP IN PROGRAMS OR ACTIVITIES CONDUCTED BY THE PENNSYLVANIA AVENUE DEVELOPMENT CORPORATION

Sec.

909.101 Purpose.
909.102 Application.
909.103 Definitions.
909.104—909.109 [Reserved]
909.110 Self-evaluation.
909.111 Notice.
909.112—909.129 [Reserved]
909.130 General prohibitions against discrimination.
909.131—909.139 [Reserved]
909.140 Employment.
909.141—909.148 [Reserved]
909.149 Program accessibility: Discrimination prohibited.
909.150 Program accessibility: Existing facilities.
909.151 Program accessibility: New construction and alterations.
909.152—909.159 [Reserved]
909.160 Communications.
909.161—909.169 [Reserved]
909.170 Compliance procedures.
909.171—909.999 [Reserved]

AUTHORITY: 29 U.S.C. 794.

SOURCE: 51 FR 22896, June 23, 1986, unless otherwise noted.

§ 909.101 Purpose.

This part effectuates section 119 of the Rehabilitation, Comprehensive Services, and Developmental Disabilities Amendments of 1978, which amended section 504 of the Rehabilitation Act of 1973 to prohibit discrimination on the basis of handicap in programs or activities conducted by Executive agencies or the United States Postal Service.

§ 909.102 Application.

This part applies to all programs or activities conducted by the agency.

§ 909.103 Definitions.

For purposes of this part, the term—

Assistant Attorney General means the Assistant Attorney General, Civil Rights Division, United States Department of Justice.

Auxiliary aids means services or devices that enable persons with impaired sensory, manual, or speaking skills to have an equal opportunity to participate in, and enjoy the benefits of, programs or activities conducted by the agency. For example, auxiliary aids useful for persons with impaired vision include readers, brailled materials, audio recordings, telecommunications devices and other similar services and devices. Auxiliary aids useful for persons with impaired hearing include telephone handset amplifiers, telephones compatible with hearing aids, telecommunication devices for deaf persons (TDD's), interpreters, notetakers, written materials, and other similar services and devices.

Complete complaint means a written statement that contains the complainant's name and address and describes

the agency's alleged discriminatory action in sufficient detail to inform the agency of the nature and date of the alleged violation of section 504. It shall be signed by the complainant or by someone authorized to do so on his or her behalf. Complaints filed on behalf of classes or third parties shall describe or identify (by name, if possible) the alleged victims of discrimination.

Facility means all or any portion of buildings, structures, equipment, roads, walks, parking lots, rolling stock or other conveyances, or other real or personal property.

Handicapped person means any person who has a physical or mental impairment that substantially limits one or more major life activities, has a record of such an impairment, or is regarded as having such an impairment.

As used in this definition, the phrase:

(1) *Physical or mental impairment* includes—

(i) Any physiological disorder or condition, cosmetic disfigurement, or anatomical loss affecting one or more of the following body systems: Neurological; musculoskeletal; special sense organs; respiratory, including speech organs; cardiovascular; reproductive; digestive; genitourinary; hemic and lymphatic; skin; and endocrine; or

(ii) Any mental or psychological disorder, such as mental retardation, organic brain syndrome, emotional or mental illness, and specific learning disabilities. The term *physical or mental impairment* includes, but is not limited to, such diseases and conditions as orthopedic, visual, speech, and hearing impairments, cerebral palsy, epilepsy, muscular dystrophy, multiple sclerosis, cancer, heart disease, diabetes, mental retardation, emotional illness, and drug addiction and alocoholism.

(2) *Major life activities* includes functions such as caring for one's self, performing manual tasks, walking, seeing, hearing, speaking, breathing, learning, and working.

(3) *Has a record of such an impairment* means has a history of, or has been misclassified as having, a mental or physical impairment that substantially limits one or more major life activities.

(4) *Is regarded as having an impairment* means—

(i) Has a physical or mental impairment that does not substantially limit major life activities but is treated by the agency as constituting such a limitation;

(ii) Has a physical or mental impairment that substantially limits major life activities only as a result of the attitudes of others toward such impairment; or

(iii) Has none of the impairments defined in paragraph (1) of this definition but is treated by the agency as having such an impairment.

Historic preservation programs means programs conducted by the agency that have preservation of historic properties as a primary purpose.

Historic properties means those properties that are listed or eligible for listing in the National Register of Historic Places or properties designated as historic under a statute of the appropriate State or local government body.

Qualified handicapped person means—

(1) With respect to preschool, elementary, or secondary education services provided by the agency, a handicapped person who is a member of a class of persons otherwise entitled by statute, regulation, or agency policy to receive education services from the agency.

(2) With respect to any other agency program or activity under which a person is required to perform services or to achieve a level of accomplishment, a handicapped person who meets the essential eligibility requirements and who can acheive the purpose of the program or activity without modifications in the program or activity that the agency can demonstrate would result in a fundamental alteration in its nature;

(3) With respect to any other program or activity, a handicapped person who meets the essential eligibility requirements for participation in, or receipt of benefits from, that program or activity; and

(4) *Qualified handicapped person* is defined for purposes of employment in 29 CFR 1613.702(f), which is made applicable to this part by § 909.140.

Section 504 means section 504 of the Rehabilitation Act of 1973 (Pub. L. 93–112, 87 Stat. 394 (29 U.S.C. 794)), as amended by the Rehabilitation Act Amendments of 1974 (Pub. L. 93–516, 88

Stat. 1617), and the Rehabilitation, Comprehensive Services, and Developmental Disabilities Amendments of 1978 (Pub. L. 95–602, 92 Stat. 2955). As used in this part, section 504 applies only to programs or activities conducted by Executive agencies and not to federally assisted programs.

Substantial impairment means a significant loss of the integrity of finished materials, design quality, or special character resulting from a permanent alteration.

§§ 909.104—909.109 [Reserved]

§ 909.110 Self-evaluation.

(a) The agency shall, by August 24, 1987, evaluate its current policies and practices, and the effects thereof, that do not or may not meet the requirements of this part, and, to the extent modification of any such policies and practices is required, the agency shall proceed to make the necessary modifications.

(b) The agency shall provide an opportunity to interested persons, including handicapped persons or organizations representing handicapped persons, to participate in the self-evaluation process by submitting comments (both oral and written).

(c) The agency shall, until three years following the completion of the self-evaluation, maintain on file and make available for public inspection:

(1) A description of areas examined and any problems identified, and

(2) A description of any modifications made.

§ 909.111 Notice.

The agency shall make available to employees, applicants, participants, beneficiaries, and other interested persons such information regarding the provisions of this part and its applicability to the programs or activities conducted by the agency, and make such information available to them in such manner as the head of the agency finds necessary to apprise such persons of the protections against discrimination assured them by section 504 and this regulation.

§§ 909.112—909.129 [Reserved]

§ 909.130 General prohibitions against discrimination.

(a) No qualified handicapped person shall, on the basis of handicap, be excluded from participation in, be denied the benefits of, or otherwise be subjected to discrimination under any program or activity conducted by the agency.

(b)(1) The agency, in providing any aid, benefit, or service, may not, directly or through contractual, licensing, or other arrangements, on the basis of handicap—

(i) Deny a qualified handicapped person the opportunity to participate in or benefit from the aid, benefit, or service;

(ii) Afford a qualified handicapped person an opportunity to participate in or benefit from the aid, benefit, or service that is not equal to that afforded others;

(iii) Provide a qualified handicapped person with an aid, benefit, or service that is not as effective in affording equal opportunity to obtain the same result, to gain the same benefit, or to reach the same level of achievement as that provided to others;

(iv) Provide different or separate aid, benefits, or services to handicapped persons or to any class of handicapped persons than is provided to others unless such action is necessary to provide qualified handicapped persons with aid, benefits, or services that are as effective as those provided to others;

(v) Deny a qualified handicapped person the opportunity to participate as a member of planning or advisory boards; or

(vi) Otherwise limit a qualified handicapped person in the enjoyment of any right, privilege, advantage, or opportunity enjoyed by others receiving the aid, benefit, or service.

(2) The agency may not deny a qualified handicapped person the opportunity to participate in programs or activities that are not separate or different, despite the existence of permissibly separate or different programs or activities.

(3) The agency may not, directly or through contractual or other

arrangments, utilize criteria or methods of administration the purpose or effect of which would—

(i) Subject qualified handicapped persons to discrimination on the basis of handicap; or

(ii) Defeat or substantially impair accomplishment of the objectives of a program or activity with respect to handicapped persons.

(4) The agency may not, in determining the site or location of a facility, make selections the purpose or effect of which would—

(i) Exclude handicapped persons from, deny them the benefits of, or otherwise subject them to discrimination under any program or activity conducted by the agency; or

(ii) Defeat or substantially impair the accomplishment of the objectives of a program or activity with respect to handicapped persons.

(5) The agency, in the selection of procurement contractors, may not use criteria that subject qualified handicapped persons to discrimination on the basis of handicap.

(6) The agency may not administer a licensing or certification program in a manner that subjects qualified handicapped persons to discrimination on the basis of handicap, nor may the agency establish requirements for the programs or activites of licensees or certified entities that subject qualified handicapped persons to discrimination on the basis of handicap. However, the programs or activities of entities that are licensed or certified by the agency are not, themselves, covered by this part.

(c) The exclusion of nonhandicapped persons from the benefits of a program limited by Federal statute or Executive order to handicapped persons or the exclusion of a specific class of handicapped persons from a program limited by Federal statute or Executive order to a different class of handicapped persons is not prohibited by this part.

(d) The agency shall administer programs and activities in the most integrated setting appropriate to the needs of qualified handicapped persons.

§§ 909.131—909.139 [Reserved]

§ 909.140 Employment.

No qualified handicapped person shall, on the basis of handicap, be subjected to discrimination in employment under any program or activity conducted by the agency. The definitions, requirements, and procedures of section 501 of the Rehabilitation Act of 1973 (29 U.S.C. 791), as established by the Equal Employment Opportunity Commission in 29 CFR part 1613, shall apply to employment in federally conducted programs or activities.

§§ 909.141—909.148 [Reserved]

§ 909.149 Program accessibility: Discrimination prohibited.

Except as otherwise provided in § 909.150, no qualified handicapped person shall, because the agency's facilities are inaccessible to or unusable by handicapped persons, be denied the benefits of, be excluded from participation in, or otherwise be subjected to discrimination under any program or activity conducted by the agency.

§ 909.150 Program accessibility: Existing facilities.

(a) *General.* The agency shall operate each program or activity so that the program or activity, when viewed in its entirety, is readily accessible to and usable by handicapped persons. This paragraph does not—

(1) Necessarily require the agency to make each of its existing facilities accessible to and usable by handicapped persons;

(2) In the case of historic preservation programs, require the agency to take any action that would result in a substantial impairment of significant historic features of an historic property; or

(3) Require the agency to take any action that it can demonstrate would result in a fundamental alteration in the nature of a program or activity or in undue financial and administrative burdens. In those circumstances where agency personnel believe that the proposed action would fundamentally alter the program or activity or would result in undue financial and administrative burdens, the agency has the

burden of proving that compliance with § 909.150(a) would result in such alteration or burdens. The decision that compliance would result in such alteration or burdens must be made by the agency head or his or her designee after considering all agency resources available for use in the funding and operation of the conducted program or activity, and must be accompanied by a written statement of the reasons for reaching that conclusion. If an action would result in such an alteration or such burdens, the agency shall take any other action that would not result in such an alteration or such burdens but would nevertheless ensure that handicapped persons receive the benefits and services of the program or activity.

(b) *Methods*—(1) *General.* The agency may comply with the requirements of this section through such means as redesign of equipment, reassignment of services to accessible buildings, assignment of aides to beneficiaries, home visits, delivery of services at alternate accessible sites, alteration of existing facilities and construction of new facilities, use of accessible rolling stock, or any other methods that result in making its programs or activities readily accessible to and usable by handicapped persons. The agency is not required to make structural changes in existing facilities where other methods are effective in achieving compliance with this section. The agency, in making alterations to existing buildings, shall meet accessibility requirements to the extent compelled by the Architectural Barriers Act of 1968, as amended (42 U.S.C. 4151–4157), and any regulations implementing it. In choosing among available methods for meeting the requirements of this section, the agency shall give priority to those methods that offer programs and activities to qualified handicapped persons in the most integrated setting appropriate.

(2) *Historic preservation programs.* In meeting the requirements of § 909.150(a) in historic preservation programs, the agency shall give priority to methods that provide physical access to handicapped persons. In cases where a physical alteration to an historic property is not required because of § 909.150(a)(2) or (a)(3), alternative methods of achieving program accessibility include—

(i) Using audio-visual materials and devices to depict those portions of an historic property that cannot otherwise be made accessible;

(ii) Assigning persons to guide handicapped persons into or through portions of historic properties that cannot otherwise be made accessible; or

(iii) Adopting other innovative methods.

(c) *Time period for compliance.* The agency shall comply with the obligations established under this section by October 21, 1986, except that where structural changes in facilities are undertaken, such changes shall be made by August 22, 1989, but in any event as expeditiously as possible.

(d) *Transition plan.* In the event that structural changes to facilities will be undertaken to achieve program accessibility, the agency shall develop, by February 23, 1987, a transition plan setting forth the steps necessary to complete such changes. The agency shall provide an opportunity to interested persons, including handicapped persons or organizations representing handicapped persons, to participate in the development of the transition plan by submitting comments (both oral and written). A copy of the transition plan shall be made available for public inspection. The plan shall, at a minimum—

(1) Identify physical obstacles in the agency's facilities that limit the accessibility of its programs or activities to handicapped persons;

(2) Describe in detail the methods that will be used to make the facilities accessible;

(3) Specify the schedule for taking the steps necessary to achieve compliance with this section and, if the time period of the transition plan is longer than one year, identify steps that will be taken during each year of the transition period; and

(4) Indicate the official responsible for implementation of the plan.

§ 909.151 Program accessibility: New construction and alterations.

Each building or part of a building that is constructed or altered by, on

behalf of, or for the use of the agency shall be designed, constructed, or altered so as to be readily accessible to and usable by handicapped persons. The definitions, requirements, and standards of the Architectural Barriers Act (42 U.S.C. 4151–4157), as established in 41 CFR 101–19.600 to 101–19.607, apply to buildings covered by this section.

§§ 909.152—909.159 [Reserved]

§ 909.160 Communications.

(a) The agency shall take appropriate steps to ensure effective communication with applicants, participants, personnel of other Federal entities, and members of the public.

(1) The agency shall furnish appropriate auxiliary aids where necessary to afford a handicapped person an equal opportunity to participate in, and enjoy the benefits of, a program or activity conducted by the agency.

(i) In determining what type of auxiliary aid is necessary, the agency shall give primary consideration to the requests of the handicapped person.

(ii) The agency need not provide individually prescribed devices, readers for personal use or study, or other devices of a personal nature.

(2) Where the agency communicates with applicants and beneficiaries by telephone, telecommunication devices for deaf person (TDD's) or equally effective telecommunication systems shall be used.

(b) The agency shall ensure that interested persons, including persons with impaired vision or hearing, can obtain information as to the existence and location of accessible services, activities, and facilities.

(c) The agency shall provide signage at a primary entrance to each of its inaccessible facilities, directing users to a location at which they can obtain information about accessible facilities. The international symbol for accessibility shall be used at each primary entrance of an accessible facility.

(d) This section does not require the agency to take any action that it can demonstrate would result in a fundamental alteration in the nature of a program or activity or in undue financial and adminstrative burdens. In those circumstances where agency personnel believe that the proposed action would fundamentally alter the program or activity or would result in undue financial and administrative burdens, the agency has the burden of proving that compliance with § 909.160 would result in such alteration or burdens. The decision that compliance would result in such alteration or burdens must be made by the agency head or his or her designee after considering all agency resources available for use in the funding and operation of the conducted program or activity, and must be accompanied by a written statement of the reasons for reaching that conclusion. If an action required to comply with this section would result in such an alteration or such burdens, the agency shall take any other action that would not result in such an alteration or such burdens but would nevertheless ensure that, to the maximum extent possible, handicapped persons receive the benefits and services of the program or activity.

§§ 909.161—909.169 [Reserved]

§ 909.170 Compliance procedures.

(a) Except as provided in paragraph (b) of this section, this section applies to all allegations of discrimination on the basis of handicap in programs or activities conducted by the agency.

(b) The agency shall process complaints alleging violations of section 504 with respect to employment according to the procedures established by the Equal Employment Opportunity Commission in 29 CFR part 1613 pursuant to section 501 of the Rehabilitation Act of 1973 (29 U.S.C. 791).

(c) The Executive Director shall be responsible for coordinating implementation of this section. Complaints may be sent to the General Counsel, Pennsylvania Avenue Development Corporaton, 1331 Pennsylvania Avenue, NW., Suite 1220 North, Washington, DC 20004–1730.

(d) The agency shall accept and investigate all complete complaints for which it has jurisdiction. All complete complaints must be filed within 180 days of the alleged act of discrimination. The agency may extend this time period for good cause.

(e) If the agency receives a complaint over which it does not have jurisdiction, it shall promptly notify the complainant and shall make reasonable efforts to refer the complaint to the appropriate government entity.

(f) The agency shall notify the Architectural and Transportation Barriers Compliance Board upon receipt of any complaint alleging that a building or facility that is subject to the Architectural Barriers Act of 1968, as amended (42 U.S.C. 4151–4157), or section 502 of the Rehabilitation Act of 1973, as amended (29 U.S.C. 792), is not readily accessible to and usable by handicapped persons.

(g) Within 180 days of the receipt of a complete complaint for which it has jurisdiction, the agency shall notify the complainant of the results of the investigation in a letter containing—

(1) Findings of fact and conclusions of law;

(2) A description of a remedy for each violation found; and

(3) A notice of the right to appeal.

(h) Appeals of the findings of fact and conclusions of law or remedies must be filed by the complainant within 90 days of receipt from the agency of the letter required by §909.170(g). The agency may extend this time for good cause.

(i) Timely appeals shall be accepted and processed by the head of the agency.

(j) The head of the agency shall notify the complainant of the results of the appeal within 60 days of the receipt of the request. If the head of the agency determines that additional information is needed from the complainant, he or she shall have 60 days from the date of receipt of the additional information to make his or her determination on the appeal.

(k) The time limits cited in paragraphs (g) and (j) of this section may be extended with the permission of the Assistant Attorney General.

(l) The agency may delegate its authority for conducting complaint investigations to other Federal agencies, except that the authority for making the final determination may not be delegated to another agency.

[51 FR 22894, 22896, June 23, 1986, as amended at 51 FR 22894, June 23, 1986]

§§ 909.171—909.999 [Reserved]

PART 910—GENERAL GUIDELINES AND UNIFORM STANDARDS FOR URBAN PLANNING AND DESIGN OF DEVELOPMENT WITHIN THE PENNSYLVANIA AVENUE DEVELOPMENT AREA

Subpart A—General

Sec.
910.1 Policy.
910.2 Purpose.
910.3 Program administration.

Subpart B—Urban Planning and Design Concerns

910.10 General.
910.11 Comprehensive urban planning and design.
910.12 Development density.
910.13 Urban design of Washington, DC.
910.14 Historic preservation.
910.15 New development design.
910.16 Land use.
910.17 Pedestrian circulation system.
910.18 Vehicular circulation and storage systems.

Subpart C—Standards Uniformly Applicable to the Development Area

910.30 General.
910.31 High architectural quality.
910.32 Historic preservation.
910.33 Off-street parking.
910.34 Accommodations for the physically handicapped.
910.35 Fine arts.
910.36 Energy conservation.
910.37 Fire and life safety.
910.38 Building exterior illumination.

Subpart D—Glossary of Terms

910.50 General.
910.51 Access.
910.52 Buildable area.
910.53 Building restriction line.
910.54 Build-to height.
910.55 Build-to line.
910.56 Coordinated planning area.
910.57 Curb-cut.
910.58 Development.
910.59 Development parcel.
910.60 Gross floor area.
910.61 Height of development.
910.62 The Plan.
910.63 Rehabilitation.
910.64 Replication.
910.65 Restoration.
910.66 Sidewalk setback.
910.67 Square Guidelines.

910.68 Storefront.
910.69 Structural bay.
910.70 Vault.
910.71 Weather protection.

AUTHORITY: Sec. 6(8) Pennsylvania Avenue Development Corporation Act of 1972 (40 U.S.C. 875(8)).

SOURCE: 48 FR 36642, Aug. 23, 1982, unless otherwise noted.

Subpart A—General

§910.1 Policy.

(a) The Pennsylvania Avenue Development Corporation Act of 1972, Pub. L. 92–578, October 27, 1972, (the *Act*), (40 U.S.C. 871 *et seq.*) established the Pennsylvania Avenue Development Corporation (the *Corporation*) with jurisdiction over the Pennsylvania Avenue Development Area (*Development Area*). The Development Area is generally described as an area in Washington DC, bounded by Pennsylvania Avenue, NW., on the south, East Executive Drive on the west, 3rd Street, NW., on the east, and E and F Streets, NW., on the north.

(b) Prior to creation of the Corporation, the deterioration of the Development Area had an adverse impact upon the physical, economic, and social life of Washington, DC. The Corporation was created as the vehicle to develop, maintain, and use the Development Area in a manner suitable to its ceremonial, physical, and historic relationship to the legislative and executive branches of the Federal government, to the governmental buildings, monuments, memorials, and parks in and adjacent to that area, and to the downtown commercial core of Washington, DC. The Corporation was directed to prepare a development plan for the Development Area and to submit that plan to the United States Congress. Congress accepted that plan and directed its implementation by the Corporation. The Corporation through a broad range of statutory powers has begun this implementation process.

(c) The Pennsylvania Avenue Plan—1974, as amended *(the Plan)* is a blueprint for social, economic, and architectural rejuvenation of the Development Area. Its goal is to make the Development Area once again a relevant and contributing element of Washington, DC. With the implementation of *the Plan,* the Development Area will become a showpiece of the Nation's Capital, proudly displaying the successful joint efforts of the Corporation, other Federal and District of Columbia government agencies, and private entrepreneurs.

(d) *The Plan,* containing the goals and objectives for *development,* is supplemented by various adopted policies and programs of the Corporation. *The Plan,* in conjunction with these policies and programs, represents the basis upon which the *development* and rejuvenation of the Development Area will proceed, whether publicly or privately inspired and accomplished. These policies and programs amplify, elaborate, and refine the planning and urban design concepts expressed in *the Plan.*

§910.2 Purpose.

(a) Implementation of *the Plan* occurs through two component actions: public improvements construction and square development. Public improvements construction consists of implementation by the Corporation of the Public Improvements Program which is a comprehensive plan for the design and construction of public amenities in public spaces and selected thoroughfares within the Development Area. This program outlines the details of roadway and sidewalk improvements, public space configuration, and pedestrian amenities. Square development consists of design and construction of *development* projects primarily on city blocks, known as squares, within the Development Area. These *development* projects are generally pursued by private entrepreneurs with varying degrees of participation and involvement by the Corporation, through such means as land assemblage and leasing.

(b) This part 910, together with the *Square Guidelines* applicable to the *coordinated planning area,* pertains solely to square development and specifies the controlling mechanism for implementation of *the Plan* required by Chapter Six of *the Plan.*

§910.3 Program administration.

(a) This part 910, together with *Square Guidelines,* described below, provides interested parties with the urban

planning and design information sufficient to understand and participate in the process of square development within the Development Area.

(1) This part 910, General Guidelines and Uniform Standards for Urban Planning and Design of Development, sets forth the general planning and design goals and objectives which govern the implementation of *the Plan,* specifies standards which are uniformly applicable to all *developments* throughout the Development Area, and provides a glossary of defined terms applicable to this part as well as *Square Guidelines.*

(2) *Square Guidelines* specifies detailed urban planning and design requirements and recommendations which are applicable to each particular *coordinated planning area,* a *coordinated planning area* being a square, a portion of a square, or a combination of squares. These requirements and recommendations set forth intentions and refinements of *the Plan* in light of the identified Planning and Design Concerns specified in subpart B of this part 910. Each set of *Square Guidelines* is adopted by the Board of Directors, issued by the Chairman, and is available, upon request, at the Corporation's office.

(3) *Square Guidelines* are developed in the context of the existing environment. Several provisions in the *Square Guidelines* are, therefore, established on the basis of certain assumptions in terms of existing buildings, a particular traffic pattern and roadway configuration, a market condition for a particular land use, etc. In the event of a major change or casualty which would render it impossible or impracticable to meet certain requirements of *Square Guidelines,* the Corporation would expect to develop and issue up-to-date *Square Guidelines.* This statement does not, of course, preclude the Corporation from issuing amendments to *Square Guidelines* from time to time on any other basis.

(b) Pursuant to section 7(b) of the Act, each proposal for *development* within the Development Area must be submitted to the Corporation to determine its consistency with *the Plan.* The Corporation's adopted development policy, entitled ''Development Policies and Procedures,'' sets forth the process for this determination. In determining whether a *development* proposal is consistent with *the Plan,* the Corporation shall review the proposal against all adopted Corporation programs, policies, and regulations, including:

(1) This part 910.

(2) Square Guidelines.

(3) Development Policies and Procedures.

(4) Historic Preservation Plan.

(5) Energy Guidelines.

(6) Side Street Improvements Program.

(7) Policy on Environmental Quality and Control (36 CFR part 907).

(8) Pennsylvania Avenue Lighting Plan.

(9) Public Improvements Program.

(10) Affirmative Action Policy and Procedure (36 CFR part 906).

(11) Policy and Procedures to Facilitate Successful Relocation of Businesses and Residents within the Pennsylvania Avenue Development Area.

(12) All other programs, policies, and regulations that may be approved and adopted by the Board of Directors from time to time.

(c) Pursuant to the Act, Federal and District of Columbia agencies and departments may exercise such existing authority and lawful powers over urban planning and design features of *development* as are consistent with *the Plan.* No department or agency may release, modify, or depart from any feature of *the Plan* without the prior approval of the Corporation.

Subpart B—Urban Planning and Design Concerns

§ 910.10 General.

To facilitate review of each *development* proposal in light of the identified urban planning and design goals of *the Plan,* the following urban planning and design concerns will be the basis upon which the evaluation of such proposals will be made. These concerns are also more specifically reflected in subpart C of this Rule, and in the requirements and recommendations in *Square Guidelines.*

(a) Comprehensive planning and design;

(b) Development density;

(c) Urban design of Washington, DC;

(d) Historic preservation;

(e) New development design;

(f) Land use;

(g) Pedestrian circulation sytems; and

(h) Vehicular circulation and storage systems.

§910.11 Comprehensive urban planning and design.

(a) All new *development* is conceived as an integral part of its surroundings, which include the remainder of the Development Area, the Mall, the Federal Triangle, and the District's downtown, and should support Pennsylvania Avenue's function as a bridge between the monumental Federal core to the south and the District's downtown to the north.

(b) All *development* shall be planned and designed to accommodate the requirements and needs of historic preservation, affirmative action, business relocation, and other concerns which will affect the overall planning and design of a *development*.

(c) The design of any *development* shall take into account *the Plan's* proposed future treatment of buildings, squares, and pedestrian spaces in the immediate surrounding area.

(d) The design of any *development* shall be coordinated with the massing, architectural design, servicing, pedestrian amenities, and uses of nearby *development* as prescribed under *the Plan*.

(e) Any *development* adjacent to F Street, NW. shall be accomplished in a manner that will strengthen F Street as a retail core of Washington, DC.

(f) Any *development* along Pennsylvania Avenue shall be designed so as to support the transformation of the Avenue into an attractive and pleasant place for residents and visitors alike, offering pleasant places to stroll, rest, sit and talk, eat, and shop.

(g) All *development* within a *coordinated planning area* shall, to the maximum extent possible, be integrated with regard to the off-street loading and servicing, pedestrian features.

§910.12 Development density.

(a) Land would be developed to the fullest extent appropriate in terms of uses, economics, and design so that the city's economic life and tax base can be enhanced.

(b) New *development* shall be designed to achieve maximum development density within the building envelope delineated by specific height restrictions, but shall also establish a compatible and appropriate scale for historic preservation, residential and other uses, and other urban design elements.

(c) Development density is limited by the Zoning Regulations of the District of Columbia and may be further restricted by the Corporation in specific *coordinated planning areas,* provided that any lower density would be economically feasible. Generally, *the Plan* is structured to create high density *development* west of the FBI and lower density *development* east of the FBI.

(d) The density of new *development* should bring new economic life—jobs, shopping, and business opportunities—to Pennsylvania Avenue, while also reinforcing existing activity both on the Avenue and in the adjacent downtown, both within and beyond the Development Area.

§910.13 Urban design of Washington, DC.

(a) Pennsylvania Avenue's unique role as the physical and symbolic link between the White House and the U.S. Capitol should be reinforced by new *development* along it.

(b) To reinforce and enrich the legacy of the L'Enfant Plan, the primary function of new *development* in the Development Area is to define open spaces and plazas, or to reinforce vistas along major streets and thoroughfares.

§910.14 Historic preservation.

(a) The Development Area is located almost entirely within the Pennsylvania Avenue National Historic Site, which was established to preserve the exceptional values of Pennsylvania Avenue and its environs in commemorating or illustrating the history of the United States. The Pennsylvania Avenue Area achieves national historic significance because of both its ceremonial role in the life of the nation and its social and economic role in the life of the residents of Washington for more than a century.

(b) The Historic Preservation Plan of the Corporation sets forth the adopted policy of the Corporation on historic

preservation and *development* within the Development Area must be consistent with this policy.

(c) New construction adjacent to historic structures will be required to take into account the qualities of the adjacent structures (with regard to height, scale, proportion, rhythm, texture, materials, architectural detail, and the amount of variety among the structures with respect to these qualities as well as style and date of erection) to ensure that these structures maintain their historic or architectural integrity, but will not necessarily be required to conform to them.

(d) Wholly new construction and new construction in conjunction with preservation will, where appropriate, take into account the historic buildings to remain, aiming for the highest quality of contemporary design, consistent with the goals and objectives of the Historic Preservation Plan.

§ 910.15 New development design.

(a) All new *development* shall represent the best contemporary architectural and urban planning concepts.

(b) Where new *development* includes or relates to historic or architecturally meritorious buildings which are to be preserved, the design of the new *development* should be aimed at retaining as much of the significant fabric of the Development Area as is possible consistent with the goals of *the Plan*.

§ 910.16 Land use.

(a) *Development* within the Development Area shall provide, and stimulate in neighboring areas, more lively and varied shopping, cultural, entertainment, and residential opportunities, as well as high quality office uses.

(b) That portion of the Development Area west of the FBI Building is designated for commercial *development*, primarily office and hotel uses with attendant retail and service uses. That portion of the Development Area east of the FBI Building is designated for *development* with residential uses, office, institutional and entertainment uses supported by service and retail uses.

(c) The kinds of uses and their location within the Development Area shall be directly related to creating a lively atmosphere and to promoting an active street life throughout the day, evening, and weekend.

(d) Introduction or expansion of retail uses shall be encouraged as both reinforcement of existing retail uses and creation of new retail activities.

(e) While recognized as important to the commercial life of any inner city, uses that do not generate lively activities are discouraged from locating along those street fronts within the Development Area which are considered major pedestrian thoroughfares.

§ 910.17 Pedestrian circulation system.

(a) An efficient, pleasant, and stimulating pedestrian circulation system shall be developed to link the components of the Development Area with the Mall and the city's downtown.

(b) Pedestrian circulation systems shall be designed to provide pedestrian comfort and convenience, to create more linear footage of *storefront*, to encourage recognition of the location of various METRO stops or other mass transit locations, and to link various historic and architecturally significant buildings, sites, and monuments which are scattered throughout and beyond the Historic Site.

(c) Curb cuts across the north sidewalk areas of Pennsylvania Avenue shall be prohibited in order to reinforce its importance as the major pedestrian thoroughfare of the Development Area.

§ 910.18 Vehicular circulation and storage systems.

(a) Improvement of the existing vehicular storage and circulation system is necessary in order to create the balanced transportation system called for in *the Plan*, which recognizes the need to maintain air quality, to encourage the use of mass transit, and to provide sufficient off-street parking and loading to make development economically viable.

(b) The general policies of the Corporation are as follows:

(1) To reduce impedance to traffic movement created by service vehicles by requiring well-integrated off-street loading facilities in terms of location of loading berths and access points on a block-by-block basis;

(2) To control the number of vehicles in the Development Area by limiting the number of parking spaces per *development;* and

(3) To encourage the use of public transportation by linking new *development* to transit stops through the system of pedestrian ways.

Subpart C—Standards Uniformly Applicable to the Development Area

§910.30 General.

In addition to the specific requirements and recommendations contained in *Square Guidelines* for the applicable *coordinated planning area,* the Standards set forth in this subpart C are uniformly applicable to any *development* within the Development Area.

§910.31 High architectural quality.

Development must maintain a uniformly high standard of architecture, representative of the best contemporary design and planning concepts. Great care and sensitivity must be shown in the architectural treatment of new buildings, particularly in terms of massing, facade design (including materials, composition, and detailing), the ground floor and sidewalk pedestrian environment, interior public spaces, and provisions for pedestrian and vehicular *access.* Special design considerations for each *coordinated planning area* are set forth in *Square Guidelines.*

§910.32 Historic preservation.

Rehabilitation of buildings within the Development Area, which, according to *the Plan* and the Historic Preservation Plan of the Corporation, are specified for preservation, shall be acomplished (a) in accordance with the Secretary of the Interior's ''Standards for Historic Preservation Projects': (36 CFR part 68), and (b) consultation with the State Historic Preservation Officer for the District of Columbia.

§910.33 Off-street parking.

(a) Off-street parking as a principal use is prohibited, although off-street parking as an accessory use in a *development* (such as a below-grade parking garage) is permitted.

(b) All parking spaces shall be located below grade level.

(c) The minimum number of parking spaces shall be provided in accordance with DC Zoning Regulations.

(d) The maximum number of parking spaces permitted by PADC for a *development* may not exceed the aggregate of the number of spaces allowed for each use within the *development.* The schedule of limitations for parking spaces is as follows:

(1) Hotel: One parking space for each four sleeping rooms or suites;

(2) Places of public assemblage other than hotels: (i.e., arena, armory, theater, auditorium, community center, convention center, concert hall, etc.) one parking space for each ten seats of occupancy capacity for the first 10,000 seats plus one for each 20 seats above 10,000: Provided, that where seats are not fixed, each seven square feet of *gross floor area* usable for seating shall be considered one seat;

(3) Retail, trade, and service establishments: one parking space for each 750 square feet of *gross floor area;*

(4) Residential: One parking space for each 1.2 units;

(5) Offices: One parking space for each 1,800 square feet of *gross floor area.*

§910.34 Accommodations for the physically handicapped.

(a) Every *development* shall incorporate features which will make the *development* accessible by the physically handicapped. The standards in the ''American Standard Specifications for Making Buildings and Facilities Accessible to, and Usable by the Physically Handicapped,'' published by the American National Standards Institute, Inc. (ANSI A 117.1–1961 (1971)), are recommended.

(b) Where a *development* includes a historic structure, the Advisory Council on Historic Preservation's policy, ''Supplementary Guidance—Handicapped Access to Historic Properties,'' (45 FR 9757, Feb. 13, 1980), should be observed.

§910.35 Fine arts.

Fine arts, including sculpture, paintings, decorative windows, bas-reliefs,

ornamental fountains, murals, tapestries, and the like, should be included in each *development*. PADC encourages commissions for original works of art which are appropriate for the *development*. For information and guidance, a reasonable expenditure for fine arts is deemed to be one half of one percent of the total construction cost of the *development*.

§ 910.36 Energy conservation.

All new *development* shall be designed to be economical in energy consumption. The Energy Guidelines of the Corporation, and the District of Columbia Energy Conservation Code Act of 1979 and its implementing regulations set forth the appropriate standards to be observed.

§ 910.37 Fire and life safety.

As a complementary action to satisfying required District of Columbia codes related to fire safety, it is highly recommended that all new *development* be guided by standards of the NFPA Codes for fire and life safety and that all buildings be equipped with an approved sprinkler system.

§ 910.38 Building exterior illumination.

Exterior illumination of a building shall be in conformance with the standards specified in the Pennsylvania Avenue Lighting Plan of the Corporation.

Subpart D—Glossary of Terms

§ 910.50 General.

The definitions appearing in this Glossary of Terms are applicable to this part 910 and to the *Square Guidelines*. In addition, definitions appearing in section 1201 of the Zoning Regulations of the District of Columbia are also applicable. Where a conflict between this subpart and section 1201 of the Zoning Regulations arises in terminology or interpretation, this subpart shall be controlling.

§ 910.51 Access.

Access, when used in reference to parking or loading, means both ingress and egress.

§ 910.52 Buildable area.

Buildable area means that portion of the established *development parcel* which can be devoted to buildings and structures. Generally, this area is bounded by any applicable *building restriction lines,* right-of-way lines and *development parcel* lines. It shall be the *buildable area* of a *development parcel* rather than ''lot,'' as it is established in the DC Zoning Regulations, that will be utilized to establish the maximum *gross floor area* of a *development* within specified portions of the Development Area.

§ 910.53 Building restriction line.

Building restriction line means a line beyond which an exterior wall of any building of a *development* may not be constructed or project, except that architectural articulation, minor architectural embellishments, and subsurface projections are permitted.

§ 910.54 Build-to height.

Build-to height means a specified minimum *height of development* to which the exterior wall of a building in a development must rise. Minor deviations from the *build-to height* for architectural embellishments and articulations of the cornice and roof level are permitted, unless otherwise prohibited by the applicable Square Guidelines or the District of Columbia's codes and regulations.

§ 910.55 Build-to line.

Build-to line means a line with which the exterior wall of a building in a *development* is required to coincide. Minor deviations from the *build-to line* for such architectural features as *weather protection,* recesses, niches, ornamental projections, entrance bays, or other articulations of the facade are permitted, unless otherwise prohibited by the applicable *Square Guidelines* or the District of Columbia's codes and regulations.

§ 910.56 Coordinated planning area.

Coordinated planning area means a Square, portion of a Square, or group of Squares that is composed of one or more *development parcels* and is treated as a unit under *Square Guidelines* in

order to achieve comprehensive planning and design.

§910.57 Curb-cut.

Curb-cut means that portion of the curb and sidewalk over which vehicular *access* is allowed. The number of *access* lanes for each *curb-cut* shall be specified in each set of *Square Guidelines.*

§910.58 Development.

Development means a structure, including a building, planned unit development, or project resulting from the process of planning, land acquisition, demolition, construction, or *rehabilitation* consistent with the objectives and goals of *the Plan.*

§910.59 Development parcel.

Development parcel means an area of land established by the Corporation to be a minimum site on which a *development* may occur under *the Plan* and any applicable *Square Guidelines* adopted by the Corporation. A *development parcel* does not need to be under the ownership of a single individual or entity. A proposal for a *development parcel* may be formulated by any number of individuals or entities, so long as it accommodates the needs and requirements of affirmative action, historic preservation and other policies of the Corporation, and at the same time responds to the goals of comprehensive planning and design for that particular *coordinated planning area.*

§910.60 Gross floor area.

Gross floor area is defined in section 1201, Zoning Regulations of the District of Columbia and generally means the sum of the gross horizontal areas of the several floors from the ground floor up of all buildings of a *development* occurring on a lot. *Gross floor area* shall be measured from the exterior faces of exterior walls and from the center line of walls separating two buildings.

§910.61 Height of development.

Height of development means the vertical distance measured from a specified point at the curb level to the highest point of the roof or parapet of the *development,* whichever is higher, exclusive of all *roof structures* except as otherwise specified.

§910.62 The Plan.

The Plan means The Pennsylvania Avenue Plan—1974, as amended, and prepared pursuant to Pub. L. 92–578, 86 Stat. 1266 (40 U.S.C. 871), and the document which sets forth the *development* concepts upon which this part 910 and *Square Guidelines* are based.

§910.63 Rehabilitation.

Rehabilitation means the process of adapting improvements on real property to make possible an efficient contemporary use achieved by means of a combination of construction, repair, or alteration, as well as *restoration* and *replication* of those portions and features of the property that are significant to its historic, architectural, and cultural values, consistent with the goals and objectives of *the Plan.*

§910.64 Replication.

Replication means the process of using modern methods and materials to reproduce the exact form and details of a vanished building, structure, object, or portion thereof, as it appeared at a particular period of time, and consistent with the objectives and goals of *the Plan.*

§910.65 Restoration.

Restoration means the process of accurately recovering the form and details of a property as they appeared at a particular period of time by means of removal of later work and the replacement of missing original work, consistent with the objectives and goals of *the Plan.*

§910.66 Sidewalk setback.

Sidewalk setback means that area between a *building restriction line* and the right-of-way of a street into which projections except architectural articulations, minor architectural embellishments, and subsurface structures, are prohibited. The area is to be dedicated to open space activities related to the public improvements program of the Pennsylvania Avenue Development Corporation. Subsurface structures may intrude into the area if they are in compliance with the *Square Guidelines.*

§ 910.67 Square guidelines.

Square Guidelines establish the Corporation's specific intent with regard to design and development objectives relative to each individual *coordinated planning area.*

§ 910.68 Storefront.

Storefront means the street level frontage relating to a single establishment.

§ 910.69 Structural bay.

Structural bay means the distance or span from one vertical structural member fronting on a street to the immediately adjacent vertical structural member fronting on the same street.

§ 910.70 Vault.

A *vault* means an enclosure of space beneath the surface of the public space or *sidewalk setback,* except that the term *vault* shall not include public utility structures.

§ 910.71 Weather protection.

Weather protection means a seasonal or permanent shelter to protect pedestrians from sun or precipitation, consisting of arcades, canopies, awnings, or other coverings.

PARTS 911—999 [RESERVED]

CHAPTER X—[RESERVED]

EDITORIAL NOTE: Chapter X, Commission of Fine Arts was vacated at 51 FR 23056, June 25, 1986. The existing regulations formerly codified as parts 1000 and 1002 were redesignated as parts 2105 and 2106, respectively, in title 45, chapter XXI.

CHAPTER XI—ARCHITECTURAL AND TRANSPORTATION BARRIERS COMPLIANCE BOARD

Part		*Page*
1120	Public availability of information	192
1121	Privacy Act implementation	206
1150	Practice and procedures for compliance hearings.	208
1151	General statement of policy	221
1152	Employee responsibilities and conduct	223
1153	Authorities and delegations	231
1154	Enforcement of nondiscrimination on the basis of handicap in programs or activities conducted by the Architectural and Transportation Barriers Compliance Board	236
1155	Statement of organization and procedures	242
1190	Minimum guidelines and requirements for accessible design	246
1191	Americans with Disabilities Act (ADA) accessibility guidelines for buildings and facilities	260
1192	Americans with Disabilities Act (ADA) accessibility guidelines for transportation vehicles	391
1193–1199	[Reserved]	

PART 1120—PUBLIC AVAILABILITY OF INFORMATION

Subpart A—General

Sec.
1120.1 Purpose and scope of this part.
1120.2 Definitions.
1120.3 Existing records.

Subpart B—Published Information

1120.5 Information published in the FEDERAL REGISTER.
1120.6 Information in A&TBCB publications.

Subpart C—Records Available for Public Inspection and Copying, Documents Published and Indexed

1120.11 Records available for inspection.
1120.12 Indexes to certain records.
1120.13 Effect of non-availability.

Subpart D—Information Available on Request

1120.21 Policy on disclosure of records.
1120.22 Requests to which this subpart applies.
1120.23 Where requests for agency records must be filed.
1120.24 Misdirected written requests; oral requests.
1120.25 Form of requests.
1120.26 Deficient descriptions.
1120.31 A&TBCB receipt of requests; responsibilities of Freedom of Information Officer.
1120.32 A&TBCB action on requests.
1120.33 Time allowed for initial action on requests.
1120.34 Initial denials of requests.
1120.36 Appeals from initial denials.
1120.37 A&TBCB action on appeals.
1120.38 Time allowed for action on appeals.
1120.41 Exempt documents.
1120.42 Release of exempt documents.

Subpart E—Copies of Records and Fees for Services

1120.51 Charges for services, generally.
1120.52 Computerized records.
1120.53 Payment of fees.

AUTHORITY: 5 U.S.C. 552, the Freedom of Information Act, as amended.

SOURCE: 45 FR 80976, Dec. 8, 1980, unless otherwise noted.

Subpart A—General

§ 1120.1 Purpose and scope of this part.

This part contains the general rules of the Architectural and Transportation Barriers Compliance Board for public access to Board records. These regulations implement 5 U.S.C. 552, the Freedom of Information Act, as amended, and the policy of the Board. It is the Board's policy to disseminate information on matters of interest to the public and to disclose on request all information contained in records in its custody insofar as is compatible with the discharge of its responsibilities and consistent with the law. This part sets forth generally the categories of records accessible to the public, the types of records subject to prohibitions or restrictions on disclosure, and the places and procedures to obtain information from records in the custody of the A&TBCB.

§ 1120.2 Definitions.

For the purposes of this part:

(a) *A&TBCB* or *Board* means the Architectural and Transportation Barriers Compliance Board.

(b) *A&TBCB record* or *record* means any document, writing, photograph, sound or magnetic recording, drawing or other similar thing by which information has been preserved, from which the information can be retrieved and copied, and which is, was, or is alleged to be under the control of the A&TBCB.

(1) The term includes—

(i) Informal writings such as handwritten notes and drafts;

(ii) Information preserved in a form which must be translated or deciphered by machine in order to be intelligible to humans;

(iii) Records which were created or acquired by the A&TBCB, its members, its employees, its members' employees, or persons acting on behalf of its members, by use of A&TBCB funds or in the course of transacting official business for the A&TBCB.

(2) The term does not include—

(i) Materials which are legally owned by an A&TBCB member, employee, or member's employee or representative in his or her purely personal capacity; and

(ii) Materials published by non-Federal organizations which are readily available to the public, such as books, journals, standards, and periodicals available through reference libraries, even if such materials are in the A&TBCB's possession.

(c) The terms *agency, person, party, rule, rulemaking, order,* and *adjudication* have the meanings given in 5 U.S.C. 551, except where the context demonstrates that a different meaning is intended, and except that for purposes of the Freedom of Information Act the term *agency* as defined in 5 U.S.C. 551 includes any executive department, military department, Government corporation, Government controlled corporation, the United States Postal Service, or other establishment in the executive branch of the Government (including the Executive Office of the President) or any independent regulatory agency.

(d) A government record *under the control of the A&TBCB* means that the record is subject to the free disposition of the A&TBCB. This includes keeping the record available for governmental use as required and protecting, preserving, and exercising such control over it as may be necessary for that purpose. Control of a record is not synonymous with, and does not require, actual physical possession of the record.

(e) *Request* means a request to inspect or obtain a copy of one or more records.

(f) *Requestor* means any person who submits a request to the A&TBCB.

(g) *Public member* means a member appointed by the President from among members of the general public.

(h) *Direct Costs* means those expenditures which an agency actually incurs in searching for and duplicating (and in the case of commercial requesters, reviewing) documents to respond to a FOIA request. Direct costs include, for example, the salary of the employee performing work (the basic rate of pay for the employee plus 16 percent of that rate to cover benefits) and the cost of operating duplicating machinery. Not included in direct costs are overhead expenses such as costs of space, and heating or lighting the facility in which the records are stored.

(i) *Search* includes all time spent looking for material that is responsive to a request, including page-by-page or line-by-line identification of material within documents. Agencies should ensure that searching for material is done in the most efficient and least expensive manner so as to minimize costs for both the agency and the requester. For example, agencies should not engage in line-by-line search when merely duplicating an entire document would prove the less expensive and quicker method of complying with a request. *Search* should be distinguished, moreover, from *review* of material in order to determine whether the material is exempt from disclosure (see paragraph (k) of this section). Searches may be done manually or by computer using existing programming.

(j) *Duplication* refers to the process of making a copy of a document necessary to respond to an FOIA request. Such copies can take the form of paper copy, microform, audio-visual materials, or machine readable documentation (e.g., magnetic tape or disk), among others. The copy provided must be in a form that is reasonably usable by requesters.

(k) *Review* refers to the process of examining documents located in response to a request that is for a commercial use (see paragraph (l) of this section) to determine whether any portion of any document located is permitted to be withheld. It also includes processing any documents for disclosure, e.g., doing all that is necessary to excise them and otherwise prepare them for release. Review does not include time spent resolving general legal or policy issues regarding the application of exemptions.

(l) *Commercial Use Request* refers to a request from or on behalf of one who seeks information for a use or purpose that furthers the commercial, trade, or profit interests of the requester or the person on whose behalf the request is made. In determining whether a requester properly belongs in this category, agencies must determine the use

to which a requester will put the documents requested. Moreover, where an agency has reasonable cause to doubt the use to which a requester will put the records sought, or where that use is not clear from the request itself, agencies should seek additional clarification before assigning the request to a specific category.

(m) *Educational Institution* refers to a preschoool, a public or private elementary or secondary school, an institution of graduate higher education, an institution of undergraduate higher education, an institution of professional education, and an institution of vocational education, which operates a program or programs of scholarly research.

(n) *Non-Commercial Scientific Institution* refers to an institution that is not operated on a *commercial* basis as that term is referenced in paragraph (l) of this section, and which is operated solely for the purpose of conducting scientific research the results of which are not intended to promote any particular product or industry.

(o) *Representative of the News Media* refers to any person actively gathering news for an entity that is organized and operated to publish or broadcast news to the public. The term *news* means information that is about current events or that would be of current interest to the public. Examples of news media entities include television or radio stations broadcasting to the public at large, and publishers of periodicals (but only in those instances when they can qualify as disseminators of *news*) who make their products available for purchase or subscription by the general public. These examples are not intended to be all-inclusive.

Moreover, as traditional methods of news delivery evolve (e.g., electronic dissemination of newspapers through telecommunications services), such alternative media would be included in this category. In the case of *freelance* journalists, they may be regarded as working for a news organization if they can demonstrate a solid basis for expecting publication through that organization, even though not actually employed by it. A publication contract would be the clearest proof, but agencies may also look to the past publication record of a requester in making this determination.

[45 FR 80976, Dec. 8, 1980, as amended at 52 FR 43195, Nov. 10, 1987; 55 FR 2519, Jan. 25, 1990]

§ 1120.3 Existing records.

All existing A&TBCB records are subject to routine destruction according to standard record retention schedules.

Subpart B—Published Information

§ 1120.5 Information published in the FEDERAL REGISTER.

(a) *General.* In accordance with the provisions of 5 U.S.C. 552(a)(1), basic information concerning the organization, operations, functions, substantive and procedural rules and regulations, officials, office locations, and allocation of responsibilities for functions and programs of the A&TBCB is published in the FEDERAL REGISTER for the guidance of the public. This information includes—

(1) Description of the A&TBCB's organization and the established places at which, the employees from whom, and the methods whereby the public may obtain information, make submittals or requests, or obtain decisions;

(2) Statements of the general course and method by which the A&TBCB's functions are channeled and determined, including the nature and requirements of all formal and informal procedures available;

(3) Rules of procedure, descriptions of forms available or the places at which forms may be obtained, and instructions as to the scope and contents of all papers, reports, or examinations;

(4) Substantive rules of general applicability adopted as authorized by law, and statements of general policy or interpretations of general applicability formulated and adopted by the A&TBCB, and

(5) Each amendment, revision, or repeal of the foregoing. Indexes to the FEDERAL REGISTER are published in each daily issue and compiled currently on a monthly, quarterly, and annual basis. Copies of the FEDERAL REGISTER and its indexes are available in many libraries and may be purchased from the Superintendent of Documents, Government Printing Office,

Washington, DC 20402. No formal request to examine documents in the FEDERAL REGISTER is necessary to inspect them at the place where they are kept. Materials incorporated by reference in the FEDERAL REGISTER are available for inspection in A&TBCB offices.

(b) *Code of Federal Regulations.* Title 36 of the *Code of Federal Regulations,* which is republished and updated annually, contains a compilation of documents published by the A&TBCB in the FEDERAL REGISTER which set forth substantive and procedural rules and regulations of the A&TBCB and statements of general policy or interpretations of general applicability formulated and adopted by the Board. Copies of the *Code of Federal Regulations* are available in many libraries and may be purchased from the Superintendent of Documents. Reference copies maintained in offices of the A&TBCB are available for examination without formal request.

(c) *Effect of nonpublication.* Except to the extent that a person has actual and timely notice of its terms, no person may in any manner be required to resort to, or be adversely affected by, any procedure or matter required to be published in the FEDERAL REGISTER, but not so published. For the purposes of this paragraph, material that is reasonably available to the class of persons affected by it is considered to be published in the FEDERAL REGISTER if it has been incorporated by reference in the FEDERAL REGISTER with the approval of the Director of the Federal Register.

§1120.6 Information in A&TBCB publications.

(a) *General.* Copies of information material shall be available upon oral or written request so long as an adequate supply exists. These informational materials include press releases, pamphlets, and other materials ordinarily made available to the public without cost as part of a public information program, and reprints of individual parts of the *Code of Federal Regulations* or FEDERAL REGISTER relating to programs affecting substantial segments of the general public. Copies of informational publications of the A&TBCB which may be purchased from the Superintendent of Documents may be inspected in those offices of the A&TBCB in which reference copies are available. Compliance with the formal procedures provided in this part for obtaining access to A&TBCB records is not necessary for access to the materials described in this paragraph.

(b) *Published indexes.* The informational publications available from the A&TBCB may include indexes to materials published or contained in its records. They will include the current indexes required by the Freedom of Information Act to be maintained and made available for inspecting and copying, except as otherwise provided by published order, as noted below. These indexes provide identifying information for the public as to—

(1) Final opinions and orders made in the adjudication of cases;

(2) Statements of policy and interpretations adopted but not published in the FEDERAL REGISTER; and

(3) Administrative staff manuals and instructions to staff that affect a member of the public.

As promptly as possible after adoption of this part, these indexes will be made available to members of the public. Thereafter, updated indexes or supplements shall be published at least quarterly. However, the Board may determine by order published in the FEDERAL REGISTER that publication of an index is unnecessary and impracticable. In that case the Board shall provide copies of the index on request at a cost not to exceed the direct cost of duplication.

Subpart C—Records Available for Public Inspection and Copying, Documents Published and Indexed

§1120.11 Records available for inspection.

Except for those categories of materials listed in paragraph (a) of this section, paragraphs (a) (1) through (9) of §1120.41 the following materials are available for public inspection and copying during normal business hours at the Washington office of the A&TBCB:

(a) Final opinions and orders made in the adjudication of cases;

(b) Statements of policy and interpretations which have been adopted under the authority of the A&TBCB and are not published in the FEDERAL REGISTER;

(c) Administrative staff manuals and instructions to staff that affect a member of the public;

(d) A record of the final votes of each member of the Board in every Board proceeding;

(e) Current indexes providing identifying information for the public as to the materials made available under paragraphs (a) through (d) of this section.

(f) All papers and documents made a part of the official record in administrative proceedings conducted by the A&TBCB in connection with the issuance, amendment, or revocation of rules and regulations or determinations having general applicability or legal effect with respect to members of the public or a class of the public.

(g) After a final order is issued in any adjudicative proceeding conducted by the A&TBCB, all papers and documents made a part of the official record of the proceeding. (The official docket is kept in the office of the administrative law judge hearing the case until a final order is issued.)

§ 1120.12 Indexes to certain records.

Current indexes are normally available to the public in published form as provided in § 1120.11. These indexes, whether or not published, are made available for inspection and copying on request. If published copies of a particular index are at any time not available or if publication of the index has been determined to be unnecessary and impracticable by order published in the FEDERAL REGISTER, copies of the index will be furnished on request. (See § 1120.6(b), *Published indexes.*)

§ 1120.13 Effect of nonavailability.

Any material listed in paragraph (a) of this section that is not indexed as required by § 1120.11(e) and § 1120.12, may not be cited, relied on, or used as precedent by the Board to adversely affect any member of the public unless the person against whom it is cited, relied on, or used has had actual and timely notice of the material.

Subpart D—Information Available Upon Request

§ 1120.21 Policy on disclosure of records.

(a) It is the policy of the A&TBCB to make information available to the public to the greatest extent possible in keeping with the spirit of the Freedom of Information Act. Therefore, all records of the A&TBCB, except those that the A&TBCB specifically determines must not be disclosed in the national interest, for the protection of private rights, or for the efficient conduct of public business to the extent permitted by the Freedom of Information Act, are declared to be available for public inspection and copying as provided in this part. Each member and employee of the A&TBCB is directed to cooperate to this end and to make records available to the public promptly and to the fullest extent consistent with this policy. A record may not be withheld from the public solely because its release might suggest administrative error or embarrass a member or employee of the A&TBCB.

(b) Subject to § 1120.51, any nonexempt A&TBCB record is available to the public upon request regardless of whether the requestor shows any justification or need for the record.

(c) An A&TBCB office may waive the procedures on this subpart in favor of the requestor, for reasons of the public interest, simplicity, or speed.

(d) If a requested record contains both exempt and nonexempt material, the nonexempt material shall be disclosed, after the exempt material has been deleted in accordance with § 1120.42.

§ 1120.22 Requests to which this subpart applies.

(a) This subpart applies to any written request (other than a request made by another Federal agency) received by the A&TBCB, whether or not the request cites the Freedom of Information Act, 5 U.S.C. 552, except with respect to records for which a less formal disclosure procedure is provided specifically in this part.

(b) Any written request to the A&TBCB for existing records prepared by the A&TBCB for routine public distribution, *e.g.*, pamphlets, copies of speeches, press releases, and educational materials, shall be honored. No individual determination under §1120.32 is necessary in these cases, since preparation of the materials for routine public distribution itself constitutes that a determination that the records are available to the public.

(c) This subpart applies only to records that exist at the time the request for information is made. (See §1120.3, *Existing records.)*

§1120.23 Where requests for agency records must be filed.

A written request for records must be filed with the A&TBCB Freedom of Information Officer, Suite 501, 1111 18th Street NW., Washington, DC 20036. Requests may be mailed to that address or filed in person at that address during the A&TBCB's normal business hours.

[45 FR 80976, Dec. 8, 1980, as amended at 55 FR 2520, Jan. 25, 1990]

§1120.24 Misdirected written requests; oral requests.

(a) The A&TBCB cannot assure that a timely for satisfactory response under this subpart will be given to written requests that are addressed to A&TBCB offices, members, or employees other than the Freedom of Information Officer listed in §1120.23. Any A&TBCB member or employee who receives a written request for inspection or disclosure of A&TBCB records must promptly forward a copy of the request to the Freedom of Information Officer, by the fastest practicable means, and must, if appropriate, commence action under §1120.32.

(b) While A&TBCB members and employees will attempt in good faith to comply with oral requests for inspection or disclosure of A&TBCB records, by telephone or otherwise, these requests are not required to be processed in accordance with this subpart.

§1120.25 Form of requests.

A request must be in writing, must reasonably describe the records sought in a way that will permit their identification and location, and must be addressed to the address set forth in §1120.23, but otherwise need not be in any particular form. Each request under the Freedom of Information Act should be clearly and prominently identified by a legend on the first page, such as ''Freedom of Information Act Request.'' The envelope in which the request is sent should be prominently marked with the letters ''FOIA.'' It is helpful, but not necessary, for the requestor to include his or her phone number and the reason for the request. A request may state the maximum amount of fees which the requester is willing to pay. Under §1120.33(d), the failure to state willingness to pay fees as high as are anticipated by the A&TBCB will delay running of the time limit and delay processing of the request, if the responsible official anticipates that the fees chargeable may exceed $250.00.

[45 FR 80976, Dec. 8, 1980, as amended at 52 FR 43195, Nov. 10, 1987]

§1120.26 Deficient descriptions.

(a) If the description of the records sought in the request is not sufficient to allow the A&TBCB to identify and locate the requested records, the office taking action under §1120.32 must notify the requestor (by telephone when practicable) that the request cannot be further processed until additional information is furnished.

(b) The A&TBCB must make every reasonable effort to assist the requestor in formulating his or her request. If a request is described in general terms (*e.g.*, all records having to do with a certain area), the A&TBCB office taking action under §1120.32 may communicate with the requestor (by telephone when practicable) with a view toward reducing the administrative burden of processing a broad request and minimizing the fee payable by the requestor. Such attempts must not be used as a means to discourage requests, but rather as a means to help identify with more specificity the records actually sought.

§ 1120.31 A&TBCB receipt of requests; responsibilities of Freedom of Information Officer.

(a) Upon receipt of a written request, the Freedom of Information Officer must mark the request with the date of receipt and must attach to the request a control slip indicating the Request Identification Number and other pertinent administrative information. The Freedom of Information Officer must immediately forward the request and control slip to the A&TBCB office which the FOIA Officer believes to be responsible for maintaining the records requested. The Freedom of Information Officer must retain a full copy of the request and control slip and must monitor the handling of the request to ensure a timely response.

(b) The Freedom of Information Officer must maintain a file concerning each request received. The file must contain a copy of the request, initial and appeal determinations, and other pertinent correspondence and records.

(c) The Freedom of Information Officer must collect and maintain the information necessary to compile the reports required by 5 U.S.C. 552(d).

§ 1120.32 A&TBCB action on requests.

(a) The FOIA Officer is delegated the authority to issue initial determinations concerning records which he or she believes are in the custody of a Board member, an employee of a member's agency, or an employee of a public member. When the FOIA Officer receives such a request, he or she shall forward it to the member, employee of a member agency, or employee of a public member whom the FOIA Officer believes to have custody of the records, requesting the records. The person to whom the request is forwarded shall, within three days of receipt of the FOIA Officer's request, either furnish the records requested to the FOIA Officer or inform the FOIA Officer of the time when they will be furnished. The FOIA Officer shall then determine whether or not to disclose the documents. For purposes of such requests and their processing under this subpart, the FOIA Officer is considered the office handling the requests.

(b) Heads of staff offices are delegated the authority to issue initial determinations, other records which are in their respective custody.

(c) Whenever an A&TBCB office receives a request forwarded by the FOIA Officer, the office should:

(1) Take action under § 1120.26, if required, to obtain a better description of the records requested;

(2) Locate the records as promptly as possible, or determine that:

(i) The records are not known to exist; or

(ii) They are located at another A&TBCB office; or

(iii) They are located at another Federal agency and not possessed by the A&TBCB.

(3) When appropriate, take action under § 1120.53(b) to obtain payment or assurance of payment;

(4) Determine which of the requested records legally must be withheld, and why (see § 1120.42(b), *Release of exempt documents*);

(5) Of the requested records which are exempt from mandatory disclosure but which legally may be disclosed (see § 1120.42(a)), determine which records will be withheld, and why;

(6) Issue an initial determination within the allowed period (see § 1120.31), specifying (individually or by category) which records will be disclosed and which will be withheld, and signed by a person authorized to issue the determination under paragraph (a) of this section (see § 1120.33, *Initial denials of requests*);

(7) Furnish the Freedom of Information Officer a copy of the determination; and

(8) If the determination denies a request, furnish the Freedom of Information Officer the name of the A&TBCB member(s) or employee(s) having custody of the records and maintain the records in a manner permitting their prompt forwarding to the General Counsel upon request if an appeal from the initial denial is filed. (See also § 1120.34.)

(d) If it appears that some or all of the requested records are not in the possession of the A&TBCB office which has been assigned responsibility for responding to the request but may be in the possession of some A&TBCB office, the responding office must so inform

the Freedom of Information officer immediately.

(e) An initial determination to disclose documents must provide the requested documents or provide the opportunity to inspect and/or obtain copies of the documents.

§1120.33 Time allowed for initial action on requests.

(a) Except as otherwise provided in this section, as soon as possible and not later than the tenth working day after the day on which the Freedom of Information Officer receives a request for records, the A&TBCB office responsible for responding to the request must issue a written determination to the requestor stating which of the requested records, will, and which will not, be released and the reason for any denial of a request.

(b) The period of 10 working days is measured from the date the request is first received and logged in by the Freedom of Information Officer.

(c) There is excluded from the period of 10 working days (or any extension) any time which elapses between the date that a requestor is notified by the A&TBCB under §1120.26 that his or her request does not reasonably identify the records sought, and the date that the requestor furnishes a reasonable identification.

(d) There is excluded from the period of 10 working days (or any extension) any time which elapses between the date that a requestor is notified by an A&TBCB office under §1120.53(b) that prepayment of fees is required, and the date that the requestor pays (or makes suitable arrangements to pay) the charges.

(e) The A&TBCB office taking action under §1120.31 may extend the basic 10-day period established under paragraph (a) of this section by a period not to exceed 10 additional working days if—

(1) The office notifies the Freedom of Information Officer;

(2) The office notifies the requestor in writing within the basic 10-day period stating the reasons for the extension and the date by which the office expects to be able to issue a determination;

(3) The extension is reasonably necessary to properly process the particular request; and

(4) One or more of the following unusual circumstances require the extension:

(i) There is a need to search for and collect the requested records from field facilities or other establishments that are separate from the office processing the request;

(ii) There is a need to search for, collect, and/or appropriately examine a voluminous amount of separate and distinct records which are demanded in a single request; or

(iii) There is need for consultation with another agency having a substantial interest in the determination of the request or among two or more components of the A&TBCB. The office must conduct the consultation with all practicable speed.

(f) Should the A&TBCB fail to issue a determination within the 10-day period or any authorized extension as to an initial request, or during the period for consideration of an appeal, the requestor shall be deemed to have exhausted his or her administrative remedies with respect to such.

In the latter situation, the requestor may commence an action in an appropriate Federal district court to obtain the records.

§1120.34 Initial denials of requests.

(a) An initial denial of a request may be issued only for the following reasons:

(1) The record is not under the A&TBCB's control;

(2) The record has been published in the FEDERAL REGISTER or is otherwise published and available for sale;

(3) A statutory provision, provision of this part, or court order requires that the information not be disclosed;

(4) The record is exempt from mandatory disclosure under 5 U.S.C. 552(b) and the responding office has decided not to disclose it under §§1120.41 and 1120.42;

(5) The record is believed to be in the A&TBCB's custody but has not yet been located. (See paragraph (f) of this section.)

(b) Each initial denial of a request shall—

(1) Be written, signed, and dated;

(2) Contain a reference to the Request Identification Number;

(3) Identify the records that are being withheld (individually or, if the denial covers a large number of similar records, by described category); and

(4) State the basis for denial of each record of category of records or any reasonably segregable portion(s) thereof being withheld.

(c) If the issuance of the determination to deny a request was directed by some A&TBCB officer or employee other than the person signing the determination letter, that other person's identity and position must be stated in the determination letter.

(d) Each initial determination which denies, in whole or in part, a request for one or more existing, located A&TBCB records must state that the requestor may appeal the initial denial by sending a written appeal to the address shown in § 1120.23 within 30 days of receipt of the determination. (See § 1120.36.)

(e) A determination is deemed issued on the date the determination letter is placed in A&TBCB mailing channels for first class mailing to the requestor, delivered to the U.S. Postal Service for mailing, or personally delivered to the requestor, whichever date first occurs.

(f) When a request must be denied because the record has not yet been located (although it is believed to be in the A&TBCB's possession), the A&TBCB office responsible for maintaining the record must continue to search diligently until it is located or it appears that the record does not exist or is not in the A&TBCB's possession, and must periodically inform the requestor of the office's progress.

§ 1120.36 Appeals from initial denials.

(a) Any person whose request has been denied in whole or in part by an initial determination may appeal that denial by addressing a written appeal to the address shown in § 1120.23.

(b) Any appeal must be mailed or filed in person at the address shown in § 1120.23—

(1) In the case of a denial of an entire request, generally not later than 30 calendar days after the date the requestor received the initial determination on the request; or

(2) In the case of a partial denial, generally not later than 30 calendar days after the requestor receives all records being made available pursuant to the initial determination.

An appeal which does not meet the requirements of this paragraph may be treated either as a timely appeal or as a new request, at the option of the Freedom of Information Officer.

(c) The appeal letter must contain—

(1) A reference to the Request Identification Number (RIN);

(2) The date of the initial determination;

(3) The name and address of the person who issued the initial denial;

(4) A statement of which of the records to which access was denied are the subjects of the appeal; and

(5) If the applicant wishes, such facts and legal or other authorities as he or she considers appropriate.

§ 1120.37 A&TBCB action on appeals.

(a) The General Counsel must make one of the following legal determinations in connection with every appeal from the initial denial of a request for an existing, located record:

(1) The record must be disclosed;

(2) The record must not be disclosed because a statute or a provision of this part so requires; or

(3) The record is exempt from mandatory disclosure but legally may be disclosed as a matter of agency discretion.

(b) Whenever the General Counsel has determined under paragraph (a)(3) of this section that a record is exempt from mandatory disclosure but legally may be disclosed, the matter must be referred to the Executive Director. If the Executive Director determines that an important purpose would be served by withholding the record, the General Counsel shall issue a determination denying the appeal. If the Executive Director determines that no important purpose would be served by withholding the record, the General Counsel must disclose the record.

(c) The General Counsel may delegate his or her authority under this section to any other attorney employed by the A&TBCB in connection

with any cateogory of appeals or any individual appeals.

(d) A determination denying an appeal from an initial denial must—

(1) Be in writing;

(2) State which of the exemptions in 5 U.S.C. 552(b) apply to each requested existing record;

(3) State the reason(s) for denial of the appeal;

(4) State the name and position of each A&TBCB officer or employee who directed that the appeal be denied; and

(5) State that the person whose request was denied may obtain de novo judicial review of the denial by complaint filed with the district court of the United States in the district in which the complainant resides, or in which the agency records are situated, or in the District of Columbia, pursuant to 5 U.S.C. 552(a)(4).

§1120.38 Time allowed for action on appeals.

(a) Except as otherwise provided in this section, as soon as possible and not later than the twentieth working day after the day on which the Freedom of Information Officer receives an appeal from an initial denial of a request for records, the General Counsel shall issue a written determination stating which of the requested records (as to which appeal was made) will and which will not be disclosed.

(b) The period of 20 working days shall be measured from the date an appeal is first received by the Freedom of Information Officer.

(c) The General Counsel may extend the basic 20-day period established under paragraph (a) of this section by a period not to exceed 10 additional working days if—

(1) He or she notifies the Freedom of Information Officer;

(2) He or she notifies the requestor in writing within the basic 20-day period stating the reasons for the extension and the date by which he or she expects to be able to issue a determination;

(3) The extension is reasonably necessary to properly process the particular request; and

(4) One or more of the following unusual circumstances require the extension:

(i) There is a need to search for and collect the records from field facilities or other establishments that are separated from the office processing the appeal;

(ii) There is a need to search for, collect, and/or appropriately examine a voluminous amount of separate and distinct records which are demanded in a single request; or

(iii) There is a need for consultation with another agency or among two or more components of the A&TBCB. The General Counsel must conduct the consultation with all practicable speed.

(d) No extension of the 20-day period may be issued under paragraph (c) of this section which would cause the total of all such extensions and of any extensions issued under §1120.33(c) to exceed 10 working days.

§1120.41 Exempt documents.

(a) Generally, 5 U.S.C. 552(b) establishes nine exclusive categories of matters which are exempt from the mandatory disclosure requirements of 5 U.S.C. 552(a). No request under 5 U.S.C. 552 for an existing, located, unpublished record in the A&TBCB's control may be denied by any A&TBCB office or employee unless the record contains (or its disclosure would reveal) matters that are—

(1) Specifically authorized under criteria established by an Executive order to be kept secret in the interest of national defense or foreign policy and which are in fact properly classified pursuant to the Executive order;

(2) Related solely to the internal personnel rules and practices of an agency;

(3) Specifically exempted from disclosure by statute;

(4) Trade secrets and commercial or financial information obtained from a person and privileged or confidential;

(5) Interagency or intra-agency memorandums or letters which would not be available by law to a party other than an agency in litigation with the agency;

(6) Personnel and medical files and similar files the disclosure of which would constitute a clearly unwarranted invasion of personal privacy;

(7) Investigatory records compiled for law enforcement purposes, but only to

the extent that the production of such records would—

(i) Interfere with enforcement proceedings;

(ii) Deprive a person of a right to a fair trial or an impartial adjudication;

(iii) Constitute an unwarranted invasion of personal privacy;

(iv) Disclose the identity of a confidential source and, in the case of a record compiled by a criminal law enforcement authority in the course of a criminal investigation or by an agency conducting a lawful national security intelligence investigation, confidential information furnished only by the confidential source;

(v) Disclose investigative techniques and procedures; or

(vi) Endanger the life or physical safety of law enforcement personnel;

(8) Contained in or related to examination, operating, or condition reports prepared by, on behalf of, or for the use of an agency responsible for the regulation or supervision of financial institutions; or

(9) Geological and geophysical information and data, including maps, concerning wells.

(b) The fact that the applicability of an exemption permits the withholding of a requested record (or portion of a record) does not necessarily mean that the record must or should be withheld. (See § 1120.42 *Release of exempt documents.)*

§ 1120.42 Release of exempt documents.

(a) An A&TBCB office may, in its discretion, release requested records despite the applicability of one or more of the exemptions listed in § 1120.41 (a)(2), (5), or (7). Disclosure of such records is encouraged if no important purpose would be served by withholding the records.

(b) Though the policy of the A&TBCB is to honor all requests, as indicated in § 1120.21(a), there are circumstances when the A&TBCB will not disclose a record if one or more of the FOIA exemptions applies to the record. The exemptions usually in such circumstances are exemptions (2), (3), (4), (6), (8) and (9). In these cases, where the A&TBCB has withheld a requested record, or portions thereof, the A&TBCB will disclose the exempted record when ordered to do so by a Federal court or in exceptional circumstances under appropriate restrictions with the approval of the Office of General Counsel.

Subpart E—Copies of Records and Fees for Services

§ 1120.51 Charges for services, generally.

(a) It shall be the policy of the ATBCB to comply with requests for documents made under the FOIA using the most efficient and least costly methods available. Requesters will be charged fees, in accordance with the administrative provisions and fee schedule set forth below, for searching for, reviewing (in the case of commercial use requesters only), and duplicating requested records.

(b) *Categories of requesters.* For the purpose of standard FOIA fee assessment, the four categories of requesters are: Commercial use requesters; educational and non-commercial scientific institution requesters; requesters who are representatives of the news media; and, all other requesters (see § 1120.2 (l) through (o), Definitions).

(c) *Levels of fees.* Levels of fees prescribed for each category of requester are as follows:

(1) Commercial Use Requesters—When the ATBCB receives a request for documents which appears to be a request for commercial use, the Board may assess charges in accordance with the fee schedule set forth below, which recover the full direct costs of searching for, reviewing for release, and duplicating the records sought. Costs for time spent reviewing records to determine whether they are exempt from mandatory disclosure applies to the initial review only. No fees will be assessed for reviewing records, at the administrative appeal level, of the exemptions already applied.

(2) Educational and Non-Commercial Scientific Institution Requesters—The ATBCB shall provide documents to requesters in this category for the cost of reproduction alone, in accordance with the fee schedule set forth below, excluding charges for the first 100 pages of reproduced documents.

(i) To be eligible for inclusion in this category, requesters must demonstrate the request is being made under the auspices of a qualifying institution and that the records are not sought for a commercial use, but are sought in furtherance of scholarly (if the request is from an educational institution) or scientific (it the request is from a noncommercial scientific institution) research.

(ii) Requesters eligible for free search must reasonably describe the records sought.

(3) Requesters Who Are Representatives of the News Media—The ATBCB shall provide documents to requesters in this category for the cost of reproduction alone, in accordance with the fee schedule set forth below, excluding charges for the first 100 pages of reproduced documents.

(4) All Other Requestors—The ATBCB shall charge requestors who do not fit into any of the categories described above, fees which recover the full direct cost of searching for and reproducing records that are responsive to the request, except that the first two hours of search time and the first 100 pages of reproduction shall be furnished without charge.

(d) Schedule of FOIA fees.

(1) Record search (ATBCB employees)—$14.00 per hour

(2) Document review (ATBCB employees)—$20.00 per hour

(3) Duplication of documents (paper copy of paper original)—$.20 per page

(e) No charge shall be made:

(1) If the costs of routine collection and processing of the fee are likely to equal or exceed the amount of the fee;

(2) For any request made by an individual or group of individuals falling into the categories listed at paragraph (b) of this section, and described in paragraph (c) of this section, (excepting commercial use requests) the first two hours of search time and first 100 pages of duplication;

(3) For the cost of preparing or reviewing letters of response to a request or appeal;

(4) For responding to a request for one copy of the official personnel record of the requestor;

(5) For furnishing records requested by either House of Congress, or by duly authorized committee or subcommittee or Congress, unless the records are requested for the benefit of an individual Member of Congress or for a constituent;

(6) For furnishing records requested by and for the official use of other Federal agencies; or

(7) For furnishing records needed by an A&TBCB contractor or grantee to perform the work required by the A&TBCB contract or grant.

(f) Requestors may be charged for unsuccessful or unproductive searches or for searches when records located are determined to be exempt from disclosure.

(g) Where the ATBCB reasonably believes that a requestor or group of requestors is attempting to break a request down into a series of requests for the purpose of evading the assessment of fees, the ATBCB shall aggregate any such requests and charge accordingly.

[55 FR 2520, Jan. 25, 1990]

§1120.52 Computerized records.

(a) Information available in whole or in part in computerized form which is disclosable under the Freedom of Information Act is available to the public as follows:

(1) When there is an existing printout from the computer which permits copying the printout, the material will be made available at the per page rate stated in §1120.51(a) for each 8½ by 11 inch page.

(2) When there is not an existing printout of information disclosable under the Freedom of Information Act, a printout shall be made if the applicant pays the cost to the A&TBCB as stated in paragraph (a)(3) of this section.

(3) Obtaining information from computerized records frequently involves a minimum computer time cost of approximately $100 per request. Multiple requests involving the same subject may cost less per request. Services of personnel in the nature of a search shall be charged for at rates prescribed in §1120.51(a). A charge shall be made for the computer time involved based upon the prevailing level of costs to Government organizations and upon the particular types of computer and associated equipment and the amounts

of time on such equipment that are utilized. A charge shall also be made for any substantial amounts of special supplies or materials used to contain, present, or make available the output of computers based upon the prevailing levels of costs to Government organizations and upon the type and amount of the supplies and materials that are used.

(b) Information in the Board's computerized records which could be produced only by additional programming of the computer, thus producing information not previously in being, is not required to be furnished under the Freedom of Information Act. In view of the usually heavy workloads of the computers used by the Board, such a service cannot ordinarily be offered to the public.

§ 1120.53 Payment of fees.

(a) *Method of payment.* All fee payments shall be in the form of a check or money order payable to the order of the ''U.S. Architectural and Transportation Barriers Compliance Board'' and shall be sent (accompanied by a reference to the pertinent Request Indentification Number(s)) to the address in § 1120.23.

(b) *Charging interest.* The ATBCB may charge interest to those requestors failing to pay fees assessed in accordance with the procedures described in § 1120.51. Interest charges, computed at the rate prescribed in section 3717 of title 31 U.S.C.A., will be assessed on the full amount billed starting on the 31st day following the day on which the bill was sent.

(c) Advance payment or assurance of payment.

(1) When an ATBCB office determines or estimates that the allowable charges a requestor may be required to pay are likely to exceed $250.00, the ATBCB may require the requestor to make an advance payment or arrangements to pay the entire fee before continuing to process the request. The ATBCB shall promptly inform the requestor (by telephone, if practicable) of the need to make an advance payment or arrangements to pay the fee. That office need not search for, review, duplicate, or disclose records in response to any request by that requestor until he or she pays, or makes acceptable arrangements to pay, the total amount of fees due (or estimated to become due) under this subpart.

(2) Where a requestor has previously failed to pay a fee charged in a timely fashion, the ATBCB may require the requestor to pay the full amount owed, plus any applicable interest, as provided in paragraph (b) of this section, and to make an advance payment of the full amount of the estimated fee before any new or pending requests will be processed from that requestor.

(3) In those instances described in paragraphs (c)(1) and (2) of this section, the administrative time limits prescribed in § 1120.33(d) will begin only after the ATBCB has received all fee payments due or acceptable arrangements have been made to pay all fee payments due.

(d) Effect of the Debt Collection Act of 1982 (Pub. L. 97–365). Requestors are advised that the ATBCB shall use the authorities of the Debt Collection Act of 1982, including disclosure to consumer reporting agencies and use of collection agencies, where appropriate, to encourage repayment of debts arising from freedom of information act requests.

(e) Waiver or reduction of fees.

(1) Records responsive to a request under 5 U.S.C. 552 shall be furnished without charge or at a charge reduced below that establsihed under paragraph (d) of § 1120.51 where the Freedom of Information Officer determines, based upon information provided by a requestor in support of a fee waiver request or otherwise made known to the Freedom of Information Officer, that disclosure of the requested information is in the public interest because it is likely to contribute significantly to public understanding of the operations or activities of the government and is not primarily in the commercial interest of the requestor. Requests for a waiver or reduction of fees shall be considered on a case-by-case basis.

(2) In order to determine whether the first fee waiver requirement is met—i.e., that disclosure of the requested information is in the public interest because it is likely to contribute significantly to public understanding of the

operations or activities of the government—Freedom of Information Officer shall consider the following four factors in sequence:

(i) The subject of the request: Whether the subject of the requested records concerns ''the operations or activities of the government.'' The subject matter of the requested records, in the context of the request, must specifically concern identifiable operations or activities of the federal government—with a connection that is direct and clear, not remote or attenuated. Furthermore, the records must be sought for their informative value with respect to those government operations or activities; a request for access to records for their intrinsic informational content alone will not satisfy this threshold consideration.

(ii) The informative value of the information to be disclosed: Whether the disclosure is ''likely to contribute'' to an understanding of government operations or activities. The disclosable portions of the requested records must be meaningfully informative on specific government operations or activities in order to hold potential for contributing to increase public understanding of those operations and activities. The disclosure of information that already is in the public domain, in either a duplicative or a substantially identical form, would not be likely to contribute to such understanding, as nothing new would be added to the public record.

(iii) The contribution to an understanding of the subject by the public likely to result from disclosure: Whether disclosure of the requested information will contribute to ''public understanding.'' The disclosure must contribute to the understanding of the public at large, as opposed to the individual understanding of the requestor or a narrow segment of interested persons. A requestor's identity and qualifications—e.g., expertise in the subject area and ability and intention to effectively convey information to the general public—should be considered. It reasonably may be presumed that a representative of the news media (as defined in § 1120.2(o)) who has access to the means of public dissemination readily will be able to satisfy this consideration. Requests from libraries or other record repositories (or requestors who intend merely to disseminate information to such institutions) shall be analyzed, like those of other requestors to identify a particular person who represents that he actually will use the requested information in scholarly or other analytic work and then disseminate it to the general public.

(iv) The significance of the contribution to public understanding: Whether the disclosure is likely to contribute ''significantly'' to public understanding of government operations or activities. The public's understanding of the subject matter in question, as compared to the level of public understanding existing prior to the disclosure, must be likely to be enhanced by the disclosure to a significant extent. Freedom of Information Officer shall not make separate value judgments as to whether information, even though it in fact would contribute significantly to public understanding of the operations or activities of the government, is ''important'' enough to be made public.

(3) In order to determine whether the second fee waiver requirement is met—i.e., that disclosure of the requested information is not primarily in the commercial interest of the requestor—the Freedom of Information Officer shall consider the following two factors in sequence:

(i) The existence and magnitude of a commercial interest: Whether the requestor has a commercial interest that would be furthered by the requested disclosure. The Freedom of Information Officer shall consider all commercial interests of the requester (with reference to the definition of ''commercial use'' in § 1120.2(l)) or any person on whose behalf the requestor may be acting, but shall consider only those interests which would be furthered by the requested disclosure. In assessing the magnitude of identified commercial interests, consideration shall be given to the role that such FOIA-disclosed information plays with respect to those commercial interests, as well as to the extent to which FOIA disclosures serve those interests overall. Requestors shall be given a reasonable opportunity

in the administrative process to provide information bearing upon this consideration.

(ii) The primary interest in disclosure: Whether the magnitude of the identified commercial interest of the requestor is sufficiently large, in comparison with the public interest in disclosure, that disclosure is ''primarily in the commercial interest of the requestor.'' A fee waiver or reduction is warranted only where, once the ''public interest'' standard set out in paragraph (e)(2) of this section is satisfied, that public interest can fairly be regarded as greater in magnitude than that of the requestor's commercial interest in disclosure. The Freedom of Information Officer shall ordinarily presume that where a news media requestor has satisfied the ''public interest'' standard, that will be the interest primarily served by disclosure to that requestor. Disclosure to data brokers or others who compile and market government information for direct economic return shall not be presumed to primarily serve ''public interest.''

(4) Where only a portion of the requested records satisfies both of the requirements for a waiver or reduction of fees under this paragraph, a waiver or reduction shall be granted only as to that portion.

(5) Requests for the waiver or reduction of fees shall address each of the factors listed in paragraphs (e) (2) and (3) of this section, as they apply to each record request. One hundred pages of reproduction shall be furnished without charge.

(6) A request for reduction or waiver of fees shall be addressed to the Freedom of Information Officer at the address shown in § 1120.23. The ATBCB office which is responding to the request for records shall initially determine whether the fee shall be reduced or waived and shall so inform the requestor. The initial determination may be appealed by letter addressed to the address shown in § 1120.23. The General Counsel or his or her designee shall decide such appeals.

[45 FR 80976, Dec. 8, 1980, as amended at 52 FR 43196, Nov. 10, 1987; 55 FR 2521, Jan. 25, 1990]

PART 1121—PRIVACY ACT IMPLEMENTATION

Sec.

1121.1 Purpose and scope.
1121.2 Definitions.
1121.3 Procedures for requests pertaining to individuals' records in a records system.
1121.4 Times, places, and requirements for the identification of the individual making a request.
1121.5 Access to requested information to the individual.
1121.6 Request for correction or amendment to the record.
1121.7 Agency review of request for correction or amendment of the record.
1121.8 Appeal of an initial adverse agency detemination on correction or amendment of the record.
1121.9 Notification of dispute.
1121.10 Disclosure of record to a person other than the individual to whom the record pertains.
1121.11 Accounting of disclosures.
1121.12 Fees.

AUTHORITY: 5 U.S.C. 552a; Pub. L. 93–579.

SOURCE: 50 FR 3905, Jan. 29, 1985, unless otherwise noted.

§ 1121.1 Purpose and scope.

The purposes of these regulations are to:

(a) Establish a procedure by which an individual can determine if the Architectural and Transportation Barriers Compliance Board, hereafter known as the Board or ATBCB, maintains a system of records which includes a record pertaining to the individual; and

(b) Establish a procedure by which an individual can gain access to a record pertaining to him or her for the purpose of review, amendment and/or correction.

§ 1121.2 Definitions.

For the purpose of these regulations—

(a) The term *individual* means a citizen of the United States or an alien lawfully admitted for permanent residence.

(b) The term *maintain* includes maintain, collect, use or disseminate.

(c) The term *record* means any item, collection or grouping of information about an individual that is maintained by the Board, including, but not limited to, his or her employment history, payroll information, and financial

transactions and that contains his or her name, or the identifying number, symbol, or other identifying particular assigned to the individual, such as social security number.

(d) The term *system of records* means a group of any records under control of the Board from which information is retrieved by the name of the individual or by some identifying number, symbol, or other identifying particular assigned to the individual.

(e) The term *routine use* means, with respect to the disclosure of a record, the use of such record for a purpose which is compatible with the purpose for which it was collected.

(f) The term *authorized representative* means a person who acts on an *individual's* behalf for purposes of these regulations, pursuant to written, signed instructions from the individual.

§1121.3 Procedures for requests pertaining to individuals' records in a records system.

An individual or authorized representative shall submit a written request to the Administrative Officer to determine if a system of records named by the individual contains a record pertaining to the individual. The individual or authorized representative shall submit a written request to the Executive Director of the ATBCB which states the individual's desire to review his or her record.

§1121.4 Times, places, and requirements for the identification of the individual making a request.

An individual or authorized representative making a request to the Administrative Officer of the ATBCB pursuant to §1121.3 shall present the request at the ATBCB offices, 330 C Street, SW., Room 1010, Washington, DC 20202, on any business day between the hours of 9 a.m. and 5:30 p.m. The individual or authorized representative submitting the request should present himself or herself at the ATBCB's offices with a form of identification which will permit the ATBCB to verify that the individual is the same individual as contained in the record requested. An authorized representative shall present a written document authorizing access. The document must be signed by the individual.

§1121.5 Access to requested information to the individual.

Upon verification of identity the Board shall disclose to the individual or authorized representative the information contained in the record which pertains to that individual. Nothing in this section shall allow an individual access to any information compiled in reasonable anticipation of a civil action or proceeding.

§1121.6 Request for correction or amendment to the record.

The individual or authorized representative should submit a request to the Administrative Officer which states the individual's desire to correct or to amend his or her record. This request is to be made in accord with provisions of §1121.4.

§1121.7 Agency review of request for correction or amendment of the record.

Within ten working days of the receipt of the request to correct or to amend the record, the Administrative Officer will acknowledge in writing such receipt and promptly either—

(a) Make any correction or amendment of any portion thereof which the individual believes is not accurate, relevant, timely, or complete; or

(b) Inform the individual or authorized representative of his or her refusal to correct or to amend the record in accordance with the request, the reason for the refusal and the procedures established by the Board for the individual to request a review of that refusal.

§1121.8 Appeal of an initial adverse agency determination on correction or amendment of the record.

An individual who disagrees with the refusal of the Administrative Officer to correct or to amend his or her record may submit a request for a review of such refusal to the Executive Director, ATBCB, 330 C Street, SW., Room 1010, Washington, DC 20202. The Executive Director will, not later than thirty (30) working days from the date on which the individual requests such review, complete such review and make final

determination, unless, for good cause shown, the Executive Director extends such thirty-day period. If, after his or her review, the Executive Director also refuses to correct or to amend the record in accordance with the request, the Board shall permit the individual or authorized representative to file with the Executive Director a concise statement setting forth the reasons for his or her disagreement with the refusal of the Executive Director and shall notify the individual or authorized representative that he or she may seek judicial review of the Executive Director's determination under 5 U.S.C. 552a(g)(1)(A).

§ 1121.9 Notification of dispute.

In any disclosure pursuant to § 1121.10 containing information about which the individual has previously filed a statement of disagreement under § 1121.8, the Board shall clearly note any portion of the record which is disputed and provide copies of the statement and, if the Executive Director deems it appropriate, copies of a concise statement of the reasons of the Executive Director for not making the amendments requested.

§ 1121.10 Disclosure of record to a person other than the individual to whom the record pertains.

The Board will not disclose a record to any individual or agency other than the individual to whom the record pertains, except to an authorized representative, unless the disclosure has been listed as a ''routine use'' in the Board's notices of its systems of records, or falls within one of the special disclosure situations listed in the Privacy Act of 1974 (5 U.S.C. 552a(b)).

§ 1121.11 Accounting of disclosures.

(a) The Board shall, except for disclosure made under sections (b)(1) and (b)(2) of the Privacy Act of 1974 (5 U.S.C. 552a) keep an accurate accounting of—

(1) The date, nature and purpose of each disclosure of a record to any person or another agency made pursuant to § 1121.10; and

(2) The name and address of the person or agency to whom the disclosure is made.

(b) This accounting shall be retained for at least five years or the life of the record, whichever is longer, after the disclosure for which the accounting is made;

(c) The Board shall make this accounting available to the individual named in the record at his or her request, except for disclosures made under section (b)(7) of the Privacy Act of 1974 (5 U.S.C. 552a).

(d) The Board shall inform any person or other agency to whom disclosure has been made pursuant to § 1121.10 about any correction or notation of dispute made by the Board.

§ 1121.12 Fees.

If an individual or authorized representative requests copies of his or her record, he or she shall be charged ten cents per page, excluding the cost of any search for review of the record, in advance of receipt of the pages.

PART 1150—PRACTICE AND PROCEDURES FOR COMPLIANCE HEARINGS

Subpart A—General Information

Sec.
1150.1 Purpose.
1150.2 Applicability: Buildings and facilities subject to guidelines and standards.
1150.3 Policy of amicable resolution.
1150.4 Definitions.
1150.5 Scope and interpretation of rules.
1150.6 Suspension of rules.

Subpart B—Parties, Complainants, Participants

1150.11 Parties.
1150.12 Complainants.
1150.13 Participation on petition.
1150.14 Appearance.

Subpart C—Form, Execution, Service and Filing of Documents for Proceedings on Citations

1150.21 Form of documents to be filed.
1150.22 Signature of documents.
1150.23 Filing and service.
1150.24 [Reserved]
1150.25 Date of service.
1150.26 Certificate of service.

Subpart D—Time

1150.31 Computation.
1150.32 Extension of time or postponement.

Subpart E—Proceedings Prior to Hearings; Pleadings and Motions

1150.41 Informal resolution.
1150.42 Citations.
1150.43 Answers.
1150.44 Amendments.
1150.45 Request for hearing.
1150.46 Motions.
1150.47 Disposition of motions and petitions.
1150.48 PER: Citation, answer, amendment.

Subpart F—Responsibilities and Duties of Judge

1150.51 Who presides.
1150.52 Authority of judge.
1150.53 Disqualification of judge.

Subpart G—Prehearing Conferences and Discovery

1150.61 Prehearing conference.
1150.62 Exhibits.
1150.63 Discovery.

Subpart H—Hearing Procedures

1150.71 Briefs.
1150.72 Purpose of hearing.
1150.73 Testimony.
1150.74 Exclusion of evidence.
1150.75 Objections.
1150.76 Exceptions.
1150.77 Official notice.
1150.78 Public documents.
1150.79 Offer of proof.
1150.80 Affidavits.
1150.81 Consolidated or joint hearing.
1150.82 PER proceedings.

Subpart I—The Record

1150.91 Record for decision.
1150.92 Official transcript.

Subpart J—Posthearing Procedures; Decisions

1150.101 Posthearing briefs; proposed findings.
1150.102 Decision.
1150.103 PER: Posthearing briefs, decision.
1150.104 Judicial review.
1150.105 Court enforcement.

Subpart K—Miscellaneous Provisions

1150.111 Ex parte communications.
1150.112 Post-order proceedings.
1150.113 Amicable resolution.
1150.114 Effect of partial invalidity.

AUTHORITY: 29 U.S.C. 792, as amended.

SOURCE: 45 FR 78474, Nov. 25, 1980, unless otherwise noted.

Subpart A—General Information

§1150.1 Purpose.

Purpose. The purpose of the regulations in this part is to implement section 502(b)(1) of the Rehabilitation Act of 1973, Pub. L. 93–112, 29 U.S.C. 792, *as amended by* the Rehabilitation, Comprehensive Services, and Developmental Disabilities Amendments of 1978, Pub. L. 95–602, section 118, 92 Stat. 2979, by establishing rules of procedure for public hearings which ensure compliance with standards issued under the Architectural Barriers Act of 1968, Pub. L. 90–480, as amended, 42 U.S.C. 4151 *et seq.* (including standards of the U.S. Postal Service).

§1150.2 Applicability: Buildings and facilities subject to guidelines and standards.

(a) *Definitions.* As used in this section, the term:

Constructed or altered on behalf of the United States means acquired by the United States through lease-purchase arrangement, constructed or altered for purchase by the United States, or constructed or altered for the use of the United States.

Primarily for use by able-bodied military personnel means expected to be occupied, used, or visited principally by military service personnel. Examples of buildings so intended are barracks, officers' quarters, and closed messes.

Privately owned residential structure means a single or multi-family dwelling not owned by a unit or subunit of Federal, state, or local government.

(b) *Buildings and facilities covered.* Except as provided in paragraph (c) of this section, the standards issued under the Architectural Barriers Act of 1968, Pub. L. 90–480, as amended, 42 U.S.C. 4151 *et seq.* (including standards of the United States Postal Service) apply to any building or facility—

(1) The intended use for which either—

(i) Will require that such building or facility be accessible to the public, or

(ii) May result in employment or residence therein of physically handicapped persons; and

(2) Which is—

(i) To be constructed or altered by or on behalf of the United States;

(ii) To be leased in whole or in part by the United States—

(A) After August 12, 1968, and before January 1, 1977, after construction or alteration in accordance with plans and specifications of the United States; or

(B) On or after January 1, 1977, including any renewal of a lease entered into before January 1, 1977, which renewal is on or after such date;

(iii) To be financed in whole or in part by a grant or loan made by the United States after August 12, 1968, if the building or facility may be subject to standards for design, construction, or alteration issued under the law authorizing the grant or loan; or

(iv) To be constructed under the authority of the National Capital Transportation Act of 1960, the National Capital Transportation Act of 1965, or title III of the Washington Metropolitan Area Transit Regulation Compact.

(c) *Buildings and facilities not covered.* The standards do not apply to—

(1) Any privately owned residential structure, unless it is leased by the Federal government on or after January 1, 1977, for subsidized housing programs; or

(2) Any building or facility on a military installation designed and constructed primarily for use by military personnel.

(d) Any covered building or facility, as provided in this section, which is designed, constructed, or altered after the effective date of a standard issued which is applicable to the building or facility, shall be designed, constructed, altered, or leased in accordance with the standard. For purposes of this section, any design, construction, alteration or lease for which bids or offers are received before the effective date of an applicable standard, in response to an invitation for bids or request for proposals, is not subject to that standard.

§ 1150.3 Policy of amicable resolution.

The policy of the Architectural and Transportation Barriers Compliance Board is to maximize the accessibility and usability of buildings, and facilities through amicable means. To this end, the Architectural and Transportation Barriers Compliance Board encourages voluntary and informal resolution of all complaints.

§ 1150.4 Definitions.

A&TBCB means the Architectural and Transportation Barriers Compliance Board.

Agency means Federal department, agency, or instrumentality as defined in sections 551(1) and 701(b)(1) of title 5 U.S.C., or an agency official authorized to represent the agency. It includes any executive department or independent establishment in the Executive Branch of the government, including wholly owned government corporations, and any establishment in the legislative or judicial branch of the government, except the Senate, the House of Representatives, and the Architect of the Capitol and any activities under his direction.

Alteration means any change in a building or facility or its permanent fixtures or equipment. It includes, but is not limited to, remodeling, renovation, rehabilitation, reconstruction, changes or rearrangement in structural parts, and extraordinary repairs. It does not include normal maintenance, reroofing, interior decoration, or changes to mechanical systems.

Architectural Barriers Act means the Architectural Barriers Act of 1968, Pub. L. 90–480, as amended, 42 U.S.C. 4151 *et seq.*

Building or facility means all or any portion of buildings, structures, equipment, roads, walks, parking lots, parks, sites, or other real property or interest in such property.

Chair means the Chair of the A&TBCB.

Complaint means any written notice of an alleged violation, whether from an individual or organization, or other written information reasonably indicating to the Executive Director a violation of the standard.

Construction means any section of a new building or an addition to an existing building.

Day means calendar day.

Executive Director means the A&TBCB Executive Director.

Extraordinary repair means the replacement or renewal of any element of an existing building or facility for purposes other than normal maintenance.

Judge means an Administrative Law Judge appointed by the A&TBCB and assigned to the case in accordance with either section 3105 or 3314 of title 5 U.S.C.

PER means Provisional Expedited Relief.

Respondent means a party answering the citation, including PER Citation.

Section 502 of the Rehabilitation Act means section 502 of the Rehabilitation Act of 1973, Pub. L. 93–112, 29 U.S.C. 792, as amended.

Standard means any standard for accessibility and usability prescribed under the Architectural Barriers Act.

[53 FR 39473, Oct. 7, 1988]

§1150.5 Scope and interpretation of rules.

(a) These rules shall govern all compliance proceedings held before a judge and all alleged violations coming to the Executive Director as a complaint.

(b) In the absence of a specific provision in these rules, procedure shall be in accordance with the Administrative Procedure Act, subchapter II of chapter 5 and chapter 7, of title 5 U.S.C., and the Federal Rules of Civil Procedure, in that order.

(c) These rules and regulations shall be liberally construed to effectuate the purposes and provisions of the Architectural Barriers Act and section 502 of the Rehabilitation Act.

(d) The rules shall be applied to secure fairness in administration and elimination of unjustifiable expense and delay and to ascertain the truth.

(e) Words importing the singular number may extend and be applied to a plural and vice versa.

§1150.6 Suspension of rules.

Upon notice to all parties, the judge, with respect to matters pending before him/her, may modify or waive any rule in these regulations upon determination that no party will be unduly prejudiced and that the end of justice will be served.

Subpart B—Parties, Complainants, Participants

§1150.11 Parties.

(a) The term parties includes (1) any agency, state or local body, or other person named as a respondent in a notice of hearing or opportunity for hearing, (2) the Executive Director and (3) any person named as a party by order of the judge.

(b) The Executive Director has the sole authority to initiate proceedings by issuing a citation under §1150.42, on the basis of (1) a complaint from any person or (2) alleged violations coming to his/her attention through any means.

§1150.12 Complainants.

(a) Any person may submit a complaint to the A&TBCB alleging that a building or facility does not comply with applicable standards issued under the Architectural Barriers Act. Complaints must be in writing and should be sent to: Executive Director, Architectural and Transportation Barriers Compliance Board, 1111 18th Street, Suite 501, Washington, DC 20036–3894.

A complaint form is available at the above address. Complaints may, but need not, contain (1) the complainant's name and where he/she may be reached, (2) the facility or building and, if known, the funding agency, and (3) a brief description of the barriers. A complaint form is available at the above address.

(b) The A&TBCB shall hold in confidence the identity of all persons submitting complaints unless the person submits a written authorization otherwise.

(c) The A&TBCB shall give or mail to the complainant a copy of these regulations.

(d) A complainant is not a party to the proceedings as a matter of course, but may petition the judge to participate under §1150.13.

(e) The A&TBCB shall send the complainant a copy of the final order issued by the judge. The complainant has

standing to obtain judicial review of that order.

[53 FR 39473, Oct. 7, 1988]

§ 1150.13 Participation on petition.

(a) By petitioning the judge, any person may be permitted to participate in the proceedings when he/she claims an interest in the proceedings and may contribute materially to their proper disposition. A complainant shall be permitted to participate in the proceeding when he/she petitions the judge.

(b) The judge may, in his/her discretion, determine the extent of participation of petitioners, including as an intervening party or participant. The judge may, in his/her discretion, limit participation to submitting documents and briefs, or permit the introduction of evidence and questioning of witnesses.

§ 1150.14 Appearance.

(a) A party may appear in person or by counsel or other representative and participate fully in any proceedings. An agency, state or local body, corporation or other association, may appear by any of its officers or by any employee it authorizes to appear on its behalf.

(b) A representative of a party or participant shall be deemed to control all matters respecting the interest of such party or participant in the proceedings.

(c) This section shall not be construed to require any representative to be an attorney-at-law.

(d) Withdrawal of appearance of any representative is effective when a written notice of withdrawal is filed and served on all parties and participants.

Subpart C—Form, Execution, Service and Filing of Documents for Proceedings on Citations

§ 1150.21 Form of documents to be filed.

Documents to be filed under the rules in this part shall be dated, the original signed in ink, shall show the docket number and title of the proceeding and shall show the title, if any, and address of the signatory. Copies need not be signed; however, the name of the person signing the original, but not necessarily his/her signature, shall be reproduced. Documents shall be legible and shall not be more than 8½ inches wide.

§ 1150.22 Signature of documents.

The signature of a party, authorized officer, employee or attorney constitutes a certification that he/she has read the document, that to the best of his/her knowledge, information, and belief there is a good ground to support it, and that it is not interposed for delay. If a document is not signed or is signed with intent to defeat the purpose of this section, it may be stricken as sham and false and the proceeding may proceed as though the document had not been filed.

§ 1150.23 Filing and service.

(a) *General.* All notices, written motions, requests, petitions, memoranda, pleadings, briefs, decisions, and correspondence to the judge, from a party or a participant or vice versa, relating to a proceeding after its commencement shall be filed and served on all parties and participants.

(b) *Filing.* Parties shall submit for filing the original and two copies of documents, exhibits, and transcripts of testimony. Filings shall be made in person or by mail, with the hearing clerk at the address stated in the notice of hearing or notice of opportunity for hearing, during regular business hours. Regular business hours are every Monday through Friday (Federal legal holidays excepted) from 9 a.m. to 5:30 p.m. Standard or Daylight Savings Time, whichever is effective in the city where the office of the judge is located at the time.

(c) *Service.* Service of one copy shall be made on each party and participant by personal delivery or by certified mail, return receipt requested, properly addressed with postage prepaid. When a party or participant has appeared by attorney or other representative, service upon the attorney or representative is deemed service upon the party or participant.

§1150.24 [Reserved]

§1150.25 Date of service.

The date of service shall be the day when the matter is deposited in United States mail or is delivered in person, except that the date of service of the initial notice of hearing or opportunity for hearing shall be the date of its delivery, or the date that its attempted delivery is refused.

§1150.26 Certificate of service.

The original of every document filed and required to be served upon parties to a proceeding shall be endorsed with a certificate of service signed by the party making service or by his/her attorney or representative, stating that such service has been made, the date of service, and the manner of service, whether by mail or personal delivery.

Subpart D—Time

§1150.31 Computation.

In computing any period of time under these rules or in any order issued under them, the time begins with the day following the act, event, or default, and includes the last day of the period, unless it is a Saturday, Sunday, or Federal legal holiday, in which event it includes the next following business day. When the period of time prescribed or allowed is less than seven (7) days, intermediate Saturdays, Sundays, and Federal legal holidays shall be excluded from the computation.

§1150.32 Extension of time or postponement.

(a) Requests for extension of time shall be addressed to the judge and served on all parties and participants. Requests should set forth the reasons for the application.

(b) If made promptly, answers to requests for extension of time are permitted.

(c) The judge may grant the extension upon a showing of good cause by the applicant.

Subpart E—Proceedings Prior to Hearings; Pleadings and Motions

§1150.41 Informal resolution.

(a) The A&TBCB immediately shall send copies of complaints to all interested agencies and persons. In addition, the A&TBCB shall apprise any person who might become a party to compliance proceedings of the alleged instances of noncompliance and afford him/her a reasonable opportunity to respond or submit pertinent documents.

(b) The Executive Director or his/her designee shall seek the cooperation of persons and agencies in obtaining compliance and shall provide assistance and guidance to help them comply voluntarily.

(c) Upon request of the Executive Director, interested agencies or persons, including, but not limited to, occupant agencies, recipients of assistance, and lessors, shall submit to the Executive Director or his/her designee timely, complete, and accurate reports concerning the particular complaint. Reports shall be completed at such times, and in such form containing all information as the Executive Director or his/her designee may prescribe.

(d) The Executive Director, or his/her designee, shall have access during normal business hours to books, records, accounts and other sources of information and facilities as may be pertinent to ascertain compliance. Considerations of privacy or confidentiality asserted by an agency or person may not bar the Executive Director from evaluating such materials or seeking to enforce compliance. The Executive Director may seek a protective order authorizing the use of allegedly confidential materials on terms and conditions specified by the judge.

(e) Complaints should be resolved informally and expeditiously, by the interested persons or agencies. If compliance with the applicable standards is not achieved informally or an impasse concerning the allegations of compliance or noncompliance is reached, the Executive Director will review the matter, including previous attempts by agencies to resolve the complaint, and

take actions including, but not limited to, surveying and investigating buildings, monitoring compliance programs of agencies, furnishing technical assistance, such as standard interpretation, to agencies, and obtaining assurances, certifications, and plans of action as may be necessary to ensure compliance.

(f) All actions to informally resolve complaints under paragraphs (a) through (e) of this section shall be completed within one hundred eighty (180) days after receipt of the complaint by all affected agencies and persons. A complaint shall be deemed informally resolved if the person or agencies responsible for the alleged violation either:

(1) Demonstrates to the Executive Director that no violation has occurred, or

(2) Corrects the violation, or

(3) Agrees in writing to implement specific compliance action within a definite time agreed to by the Executive Director, or

(4) Are timely implementing a plan for compliance agreed to by the Executive Director.

No later than ten (10) days after the determination of the one hundred eighty (180) day period, the Executive Director shall either issue a citation under § 1150.42, or determine in writing that a citation will not be issued at that time and the reasons that it is considered unnecessary.

(g) A determination not to issue a citation shall be served in accordance with § 1150.23 on all interested agencies and persons upon whom a citation would have been served if it had been issued. Except as otherwise provided in paragraph (i) of this section, the failure of the Executive Director to take action within the ten (10) day period after termination of the one hundred eighty (180) day informal resolution period shall not preclude the Executive Director from taking action thereafter.

(h) Nothing in paragraphs (a) through (g) of this section shall be construed as precluding the Executive Director before the termination of the one hundred eighty (180) day informal resolution period from:

(1) Issuing a citation if it is reasonably clear that informal resolution cannot be achieved within that time, or

(2) Determining not to issue a citation if it is reasonably clear that compliance can be achieved or that issuance of a citation is not otherwise warranted.

(i) At any time after the expiration of one hundred ninety (190) days after receipt of the complaint by all affected agencies and persons, any person or agency receiving a copy of the complaint, or the complainant, may serve a written request on the Executive Director to issue a citation or determination not to proceed within thirty (30) days. If the Executive Director fails to serve a written response within thirty (30) days of receipt of such a request, the complaint shall be deemed closed.

[53 FR 39474, Oct. 7, 1988]

§ 1150.42 Citations.

(a) If there appears to be a failure or threatened failure to comply with a relevant standard, and the noncompliance or threatened noncompliance cannot be corrected or resolved by informal means under § 1150.41, the Executive Director on behalf of the A&TBCB may issue a written citation, requesting the ordering of relief necessary to ensure compliance with the standards or guidelines and requirements. The relief may include the suspension or withholding of funds and/or specific corrective action.

(b) The citation shall be served upon all interested parties, as appropriate, including but not limited to the complainant, the agency having custody, control, or use of the building or facility, and the agency funding by contract, grant, or loan, the allegedly noncomplying building or facility.

(c) The citation shall contain:

(1) A concise jurisdictional statement reciting the provisions of section 502 of the Rehabilitation Act and Architectural Barriers Act under which the requested action may be taken, (2) a short and plain basis for requesting the imposition of the sanctions, (3) a statement either that within fifteen (15) days a hearing date will be set or that the agency or affected parties may request a hearing within fifteen (15) days from service of the citation, and (4) a

list of all pertinent documents necessary for the judge to make a decision on the alleged noncompliance, including but not limited to, contracts, invitations for bids, specifications, contract or grant drawings, and correspondence.

(d) The Executive Director shall file copies of all pertinent documents listed in the citation simultaneously with filing the citation.

§1150.43 Answers.

(a) Answers shall be filed by respondents within fifteen (15) days after receipt of a citation.

(b) The answer shall admit or deny specifically and in detail, matters set forth in each allegation of the citation. If the respondent is without knowledge, the answer shall so state and such statement shall be deemed a denial. Matters not specifically denied shall be deemed admitted. Failure to file a timely answer shall constitute an admission of all facts recited in the citation.

(c) Answers shall contain a list of additional pertinent documents not listed in the citation when respondent reasonably believes these documents are necessary for the judge to make a decision. Copies of the listed documents shall be filed with the answer.

(d) Answers may also contain a request for a hearing under §1150.45.

§1150.44 Amendments.

(a) The Executive Director may amend the citation as a matter of course before an answer is filed. A respondent may amend its answer once as a matter of course, but not later than five (5) days after the filing of the original answer. Other amendments of the citation or the answer shall be made only by leave of judge.

(b) An amended citation shall be answered within five (5) days of its service, or within the time for filing an answer to the original citation, whichever is longer.

§1150.45 Request for hearing.

When a citation does not state that a hearing will be scheduled, the respondent, either in a separate paragraph of the answer, or in a separate document, may request a hearing. Failure of a respondent to request a hearing within fifteen (15) days from service of the citation shall be deemed a waiver of the right to a hearing and shall constitute consent to the making of a decision on the basis of available information.

§1150.46 Motions.

(a) Motions and petitions shall state the relief sought, the authority relied upon, and the facts alleged.

(b) If made before or after the hearing, these matters shall be in writing. If made at the hearing, they may be stated orally or the judge may require that they be reduced to writing and filed and served on all parties.

(c) Except as otherwise ordered by judge, responses to a written motion or petition shall be filed within ten (10) days after the motion or petition is served. An immediate oral response may be made to an oral motion. All oral arguments on motions will be at the discretion of the judge.

(d) A reply to a response may be filed within within five (5) days after the response is served. The reply shall address only the contents of the response.

§1150.47 Disposition of motions and petitions.

The judge may not sustain or grant a written motion or petition prior to expiration of the time for filing responses, but may overrule or deny such motion or petition without awaiting response, *Providing however,* That prehearing conferences, hearings, and decisions need not be delayed pending disposition of motions or petitions. All motions and petitions may be ruled upon immediately after reply. Motions and petitions not disposed of in separate rulings or in decisions will be deemed denied.

§1150.48 PER: Citation, answer, amendment.

(a) Unless otherwise specified, other relevant sections shall apply to PER proceedings.

(b) In addition to all other forms of relief requested, the citation shall request PER when it appears to the Executive Director that immediate and irreparable harm from noncompliance with the standard is occurring or is about to occur. Citations requesting

PER shall recite specific facts and include the affidavit or the notarized complaint upon which the PER request is based. Citations requesting PER shall recite that a hearing regarding PER has been scheduled to take place eight (8) days after receipt of the citation. Citations requesting PER may be filed without prejudice to proceedings in which PER is not requested and without prejudice to further proceedings if PER is denied. The time and place of hearing fixed in the citation shall be reasonable and shall be subject to change for cause.

(c) Answers to citations requesting PER shall be in the form of all answers, as set forth in § 1150.43, and must be filed within four (4) days after receipt of the citation. Answers shall recite in detail, by affidavit or by notarized answer, why the PER requested should not be granted.

(d) When a citation contains both a request for relief to ensure compliance with a standard and a request for PER, an answer to the PER request shall be filed in accordance with paragraph (c) of this section and an answer to a request for other relief shall be filed in accordance with § 1150.43.

(e) Citations and answers in PER proceedings may not be amended prior to hearing. Citations and answers in PER proceedings may be amended at the hearing with the permission of the judge.

Subpart F—Responsibilities and Duties of Judge

§ 1150.51 Who presides.

(a) A judge assigned to the case under section 3105 or 3344 of title 5 U.S.C. (formerly section 11 of the Administrative Procedure Act), shall preside over the taking of evidence in any hearing to which these rules of procedure apply.

(b) The A&TBCB shall, in writing, promptly notify all parties and participants of the assignment of the judge. This notice may fix the time and place of hearing.

(c) Pending his/her assignment, the responsibilities, duties, and authorities of the judge under these regulations shall be executed by the A&TBCB, through the Chair or another member of the A&TBCB designated by the Chair. A Board member shall not serve in this capacity in any proceeding relating to the member, his/her Federal agency, or organization of which he/she is otherwise interested.

[53 FR 39474, Oct. 7, 1988]

§ 1150.52 Authority of judge.

The judge shall have the duty to conduct a fair hearing, to take all necessary action to avoid delay, and maintain order. He/she shall have all powers necessary to effect these ends, including (but not limited to) the power to:

(a) Arrange and issue notice of the date, time, and place of hearings previously set.

(b) Hold conferences to settle, simplify, or fix the issues in proceedings, or to consider other matters that may aid in the expeditious disposition of the proceedings.

(c) Require parties and participants to state their position with respect to the various issues in the proceedings.

(d) Administer oaths and affirmations.

(e) Rule on motions, and other procedural items on matters pending before him/her.

(f) Regulate the course of the hearing and conduct of counsel.

(g) Examine witnesses and direct witnesses to testify.

(h) Receive, rule on, exclude or limit evidence.

(i) Fix time for filing motions, petitions, briefs, or other items in matters pending before him/her.

(j) Issue decisions.

(k) Take any action authorized by the rules in this part or the provisions of sections 551 through 559 of title 5 U.S.C. (the Administrative Procedure Act).

[45 FR 78474, Nov. 25, 1980. Redesignated at 53 FR 39474, Oct. 7, 1988]

§ 1150.53 Disqualification of judge.

(a) A judge shall disqualify himself/herself whenever in his/her opinion it is improper for him/her to preside at the proceedings.

(b) At any time following appointment of the judge and before the filing of the decision, any party may request the judge to withdraw on grounds of

personal bias or prejudice either against it or in favor of any adverse party, by promptly filing with him/her an affidavit setting forth in detail the alleged grounds for disqualification.

(c) If, in the opinion of the judge, the affidavit referred to in paragraph (b) of this section is filed with due diligence and is sufficient on its face, the judge shall promptly disqualify himself/herself.

(d) If the judge does not disqualify himself/herself, he/she shall so rule upon the record, stating the grounds for his/her ruling. Then, he/she shall proceed with the hearing, or, if the hearing has closed, he/she shall proceed with the issuance of the decision.

[45 FR 78474, Nov. 25, 1980. Redesignated at 53 FR 39474, Oct. 7, 1988]

Subpart G—Prehearing Conferences and Discovery

§1150.61 Prehearing conference.

(a) At any time before a hearing, the judge on his/her own motion or on motion of a party, may direct the parties or their representative to exchange information or to participate in a prehearing conference for the purpose of considering matters which tend to simplify the issues or expedite the proceedings.

(b) The judge may issue a prehearing order which includes the agreements reached by the parties. Such order shall be served upon all parties and participants and shall be a part of the record.

§1150.62 Exhibits.

(a) Proposed exhibits shall be exhanged at the prehearing conference, or otherwise prior to the hearing if the judge so requires. Proposed exhibits not so exchanged may be denied admission as evidence.

(b) The authenticity of all proposed exhibits will be deemed admitted unless written objection to them is filed prior to the hearing or unless good cause is shown at the hearing for failure to file such written objection.

§1150.63 Discovery.

(a) Parties are encouraged to engage in voluntary discovery procedures. For good cause shown under appropriate circumstances, but not as a matter of course, the judge may entertain motions for permission for discovery and issue orders including orders—(1) to submit testimony upon oral examination or written interrogatories before an officer authorized to administer oaths, (2) to permit service of written interrogatories upon the opposing party, (3) to produce and permit inspection of designated documents, and (4) to permit service upon the opposing parties of a request for the admission of specified facts.

(b) Motions for discovery shall be granted only to the extent and upon such terms as the judge in his/her discretion considers to be consistent with and essential to the objective of securing a just and inexpensive determination of the merits of the citation without unnecessary delay.

(c) In connection with any discovery procedure, the judge may make any order which justice requires to protect a party or person from annoyance, embarrassment, oppression or undue burden or expense, including limitations on the scope, method, time and place for discovery, and provisions for protecting the secrecy of confidential information or documents. If any party fails to comply with a discovery order of the judge, without an excuse or explanation satisfactory to the judge, the judge may decide the fact or issue relating to the material requested to be produced, or the subject matter of the probable testimony, in accordance with claims of the other party in interest or in accordance with the other evidence available to the judge, or make such other ruling as he/she determines just and proper.

Subpart H—Hearing Procedures

§1150.71 Briefs.

The judge may require parties and participants to file written statements of position before the hearing begins. The judge may also require the parties to submit trial briefs.

§1150.72 Purpose of hearing.

Hearings for the receipt of evidence will be held only in cases where issues

of fact must be resolved. Where it appears from the citation, the answer, stipulations, or other documents in the record, that there are no matters of material fact in dispute, the judge may enter an order so finding, vacating the hearing date, if one has been set, and fixing the time for filing briefs.

§ 1150.73 Testimony.

(a) Formal rules of evidence shall not apply, but rules or principles designed to assure production of the most probative evidence available do apply. Testimony shall be given orally under oath or affirmation; but the judge, in his/her discretion, may require or permit the direct testimony of any witness to be prepared in writing and served on all parties in advance of the hearing. Such testimony may be adopted by the witness at the hearing and filed as part of the record.

(b) All witnesses shall be available for cross-examination and, at the discretion of the judge, may be cross-examined without regard to the scope of direct examination as to any matter which is relevant and material to the proceeding.

(c) When testimony is taken by deposition, an opportunity shall be given, with appropriate notice, for all parties to cross-examine the witness. Objections to any testimony or evidence presented shall be deemed waived unless raised at the time of the deposition.

(d) Witnesses appearing before the judge shall be paid the same fees and mileage that are paid witnesses in the courts of the United States. Witnesses whose depositions are taken and the persons taking the same shall be entitled to the same fees as are paid for like services in the courts of the United States. Witness fees and mileage shall be paid by the party requesting the witness to appear, and the person taking a deposition shall be paid by the party requesting the taking of the deposition.

§ 1150.74 Exclusion of evidence.

The judge may exclude evidence which is immaterial, irrelevant, unreliable, or unduly repetitious.

§ 1150.75 Objections.

Objections to evidence or testimony shall be timely and may briefly state the grounds.

§ 1150.76 Exceptions.

Exceptions to rulings of the judge are unnecessary. It is sufficient that a party at the time the ruling of the judge is sought, makes known the action which he/she desires the judge to take, or his/her objection to an action taken, and his/her grounds for it.

§ 1150.77 Official notice.

Where official notice is taken or is to be taken of a material fact not appearing in the evidence of record, any party on timely request, shall be afforded an opportunity to question the propriety of taking notice or to rebut the fact noticed.

§ 1150.78 Public documents.

When a party or paticipant offers, in whole or in part, a public document, such as an official report, decision, opinion, or published scientific or economic statistical data issued by any of the executive departments, or their subdivisions, legislative agencies or committees or administrative agencies of the Federal government (including government-owned corporations), or a similar document issued by a State or local government or their agencies, and such document (or part thereof) has been shown by the offeror to be reasonably available to the public, such document need not be produced or marked for identification, but may be offered for official notice, as a public document by specifying the document or its relevant part.

§ 1150.79 Offer of proof.

An offer of proof made in connection with an objection taken to a ruling of the judge rejecting or excluding proffered oral testimony shall consist of a statement of the substance of the evidence which counsel contends would be adduced by such testimony. If the excluded evidence consists of evidence in documentary or written form or refers to documents or records, a copy of the

evidence shall be marked for identification and shall accompany the record as the offer of proof.

§1150.80 Affidavits.

An affidavit is not inadmissible as such. Unless the judge fixes other time periods, affidavits shall be filed and served on the parties not later than fifteen (15) days prior to the hearing. Not less than seven (7) days prior to hearing, a party may file and serve written objections to any affidavit on the ground that he/she believes it necessary to test the truth of its assertions at hearing. In such event the assertions objected to will not be received in evidence unless the affiant is made available for cross-examination, or the judge determines that cross-examination is not necessary for the full and true disclosure of facts referred to in such assertions. Not withstanding any objection, however, affidavits may be considered in the case of any respondent who waives a hearing.

§1150.81 Consolidated or joint hearing.

In cases in which the same or related facts are asserted to constitute noncompliance with standards or guidelines and requirements, the judge may order all related cases consolidated and may make other orders concerning the proceedings as will be consistent with the objective of securing a just and inexpensive determination of the case without unnecessary delay.

§1150.82 PER proceedings.

(a) In proceedings in which a citation, or part of one, seeking PER has been filed, the judge shall make necessary rulings with respect to time for filing of pleadings, the conduct of the hearing, and to all other matters. He/she shall do all other things necessary to complete the proceeding in the minimum time consistent with the objective of securing an expeditious, just and inexpensive determination of the case. The times for actions set forth in these rules shall be followed unless otherwise ordered by the judge.

(b) The judge shall determine the terms and conditions for orders of PER. These orders must be consistent with preserving the rights of all parties so as to permit the timely processing of the citation, or part of it, not requesting PER, as well as consistent with the provisions and objectives of the Architectural Barriers Act and section 502 of the Rehabilitation Act. In issuing an order for PER, the judge shall make the following specific findings of fact and conclusions of law—

(1) The Executive Director is likely to succeed on the merits of the proceedings;

(2) The threatened injury or violation outweighs the threatened harm to the respondent if PER is granted; and

(3) Granting PER is in the public interest.

(c) The judge may dismiss any citation or part of a citation seeking PER when the judge finds that the timely processing of a citation not requesting PER will adequately ensure the objectives of section 502 of the Rehabilitation Act and that immediate and irreparable harm caused by noncompliance with the standards or guidelines and requirements is not occurring or about to occur.

Subpart I—The Record

§1150.91 Record for decision.

The transcript of testimony, exhibits and all papers, documents and requests filed in the proceeding, including briefs and proposed findings and conclusions, shall constitute the record for decision.

§1150.92 Official transcript.

The official transcripts of testimony, and any exhibits, briefs, or memoranda of law filed with them, shall be filed with the judge. Transcripts of testimony in hearings may be obtained from the official reporter by the parties and the public at rates not to exceed the maximum rates fixed by the contract between the A&TBCB and the reporter. Upon notice to all parties, the judge may authorize corrections to the transcript as are necessary to reflect accurately the testimony.

Subpart J—Posthearing Procedures; Decisions

§ 1150.101 Posthearing briefs; proposed findings.

The judge shall fix the terms, including time, for filing post-hearing statements of position or briefs, which may contain proposed findings of fact and conclusions of law. The judge may fix a reasonable time for such filing, but this period shall not exceed thirty (30) days from the receipt by the parties of the transcript of the hearing.

§ 1150.102 Decision.

(a) The judge shall issue a decision within thirty (30) days after the hearing ends or, when the parties submit posthearing briefs, within thirty (30) days after the filing of the briefs.

(b) The decision shall contain (1) all findings of fact and conclusions of law regarding all material issues of fact and law presented in the record, (2) the reasons for each finding of fact and conclusion of law, and (3) other provisions which effectuate the purposes of the Architectural Barriers Act and section 502 of the Rehabilitation Act. The decision may direct the parties to take specific action or may order the suspension or withholding of Federal funds.

(c) The decision shall be served on all parties and participants to the proceedings.

§ 1150.103 PER: Posthearing briefs, decision.

(a) No briefs or posthearing statements of position shall be required in proceedings seeking PER unless specifically ordered by the judge.

(b) In proceedings seeking PER the decision may be given orally at the close of the hearing and shall be made in writing within three (3) days after the hearing.

§ 1150.104 Judicial review.

Any complainant or participant in a proceeding may obtain judicial review of a final order issued in a compliance proceeding.

§ 1150.105 Court enforcement.

The Executive Director, at the direction of the Board, shall bring a civil action in any appropriate United States district court to enforce, in whole or in part, any final compliance order. No member of the A&TBCB shall participate in any decision of the A&TBCB concerning a proceeding relating to the member, his/her Federal agency, or organization to which he/she is a member or in which he/she is otherwise interested.

Subpart K—Miscellaneous Provisions

§ 1150.111 Ex parte communications.

(a) No party, participant or other person having an interest in the case shall make or cause to be made an ex parte communication to the judge with respect to the case.

(b) A request for information directed to the judge which merely inquiries about the status of a proceeding without discussing issues or expressing points of view is not deemed an ex parte communication. Communications with respect to minor procedural matters or inquires or emergency requests for extensions of time are not deemed ex parte communications prohibited by paragraph (a) of this section. Where feasible, however, such communications should be by letter, with copies delivered to all parties. Ex parte communications between a party or participant and the Executive Director with respect to securing compliance are not prohibited.

(c) In the event an ex parte communication occurs, the judge shall issue orders and take action as fairness requires. A prohibited communication in writing received by the judge shall be made public by placing it in the correspondence file of the docket in the case and will not be considered as part of the record for decision. If the prohibited communication is received orally, a memorandum setting forth its substance shall be made and filed in the correspondence section of the docket in the case. A person referred to in this memorandum may file a comment for inclusion in the docket if he/she considers the memorandum to be incorrect.

§ 1150.112 Post-order proceedings.

(a) Any party adversely affected by the compliance order issued by a judge

may make a motion to the judge to have such order vacated upon a showing that the building or facility complies with the order.

(b) Notice of motions and copies of all pleadings shall be served on all parties and participants to the original proceeding. Responses to the motion to vacate shall be filed within ten (10) days after receipt of the motion unless the judge for good cause shown grants additional time to respond.

(c) Oral arguments on the motion may be ordered by the judge. The judge shall fix the terms of the argument so that they are consistent with the objective of securing a prompt, just, and inexpensive determination of the motion.

(d) Within ten (10) days after receipt of all answers to the motion, the judge shall issue his/her decision in accordance with §1150.102 (b) and (c).

§1150.113 Amicable resolution.

(a) Amicable resolution is encouraged at any stage of proceedings where such resolution is consistent with the provisions and objectives of the Architectural Barriers Act and section 502 of the Rehabilitation Act.

(b) Agreements to amicably resolve pending proceedings shall be submitted by the parties and shall be accompanied by an appropriate proposed order.

(c) The Executive Director is authorized to resolve any proceeding on behalf of the A&TBCB unless otherwise specifically directed by the A&TBCB and afterwards may file appropriate stipulations or notice that the proceeding is discontinued.

§1150.114 Effect of partial invalidity.

If any section, subsection, paragraph, sentence, clause or phrase of these regulations is declared invalid for any reason, the remaining portions of these regulations that are severable from the invalid part shall remain in full force and effect. If a part of these regulations is invalid in one or more of its applications, the part shall remain in effect in all valid applications that are severable from the invalid applications.

PART 1151—GENERAL STATEMENT OF POLICY

Sec.
1151.1 Federal parking space policies.
1151.2 Amicus curiae policies.
1151.3 Public transportation accessibility policy.
1151.4 Federal procurement policies.
1151.5 Voting accessibility policy.

AUTHORITY: Pub. L. 93–112, as amended by Pub. L. 95–602 (29 U.S.C. 792).

§1151.1 Federal parking space policies.

Those standards for design, construction, and alteration issued under the Architectural Barriers Act of 1968, as amended, should be revised to require in all federally owned, occupied, or leased buildings and facilities that—

(a) Accessible parking spaces be located closest to an accessible entrance, and

(b) At least 2 percent of any visitor parking (a minimum of one space in any such visitor parking lot) be provided for handicapped visitors.

[44 FR 18022, Mar. 26, 1979]

§1151.2 Amicus curiae policies.

(a) *Applicability*. This section sets forth policies and procedures for the A&TBCB to participate as amicus curiae in litigation.

(b) *Definition*. As used in this section, the term amicus curiae means to intervene, appear and participate, or to appear as amicus curiae, in any court of the United States or in any court of a State in civil actions.

(c) The Executive Committee of the ATBCB has the duty and responsibility to review requests to the Board to enter litigation as *amicus curiae*. In carrying out these responsibilities, the Executive Committee is delegated the authority to disapprove such requests and make recommendations to the ATBCB to approve such requests. ATBCB approval shall be required prior to any *amicus* filing. The Executive Committee may request the Chairperson of the ATBCB to call a special meeting of the ATBCB to expedite

ATBCB action on the Executive Committee's recommendations.

[45 FR 44926, July 2, 1980, as amended at 48 FR 52911, Nov. 23, 1983; 48 FR 54223, Dec. 1, 1983]

§ 1151.3 Public transportation accessibility policy.

Just as disabled persons are entitled to equal access to public buildings, they are entitled to equal mobility; this means that they have the right to public transportation that is comparable to that available to the general public in terms of geographic range and hours of operation, trip decision time, fares, and the lack of restrictions on trip purpose and eligibility.

[45 FR 43718, June 30, 1980]

§ 1151.4 Federal procurement policies.

(a) Except as otherwise provided in this § 1151.4, for purposes of the Federal Property and Administrative Services Act and implementing regulations and circulars the Chairperson shall act as the ''Head of the Agency'' or ''Agency Head'' for administrative determinations.

(b) Except as otherwise provided in this § 1151.4, for purposes of the Federal Property and Administrative Services Act and implementing regulations and circulars, the Executive Director is delegated authority to act as ''Head of the Procuring Activity'' and to designate appropriate subordinate officials. The Executive Director may—

(1) Enter all contracts on behalf of the ATBCB in accordance with the provisions of this § 1151.4 or may delegate that responsibility,

(2) To the extent authorized by law, direct suspension or termination of contracts under his or her procuring authority, and of contracts under the delegated authority of designated subordinate officials, and

(3) Process unsolicited proposals.

(c) The ATBCB will approve the specific objective of each procurement—

(1) In excess of $10,000, or

(2) Which has a major policy implication before any such procurement is awarded and reserves the right, as warranted, to impose limitations applicable to particular procurements.

(d) The ATBCB will enter into a sole source procurement only after approval to do so has been given by a majority vote of the members of the Planning and Budget Committee of the ATBCB and the Chairperson.

(e) To the extent authorized by law, the ATBCB may:

(1) Ratify unauthorized procurements, and

(2) Direct suspension or termination of contracts under its procuring authority.

(f) Paragraphs (c)(1) and (d) of this section do not apply to basic Administrative procurements, regardless of amount of said procurements, except as otherwise provided in paragraph (f)(2), of this section. The term basic Administrative procurement shall mean procurements for:

(1) Purchase or rental of equipment, including data processing equipment, and related services.

(2) Printing. (However, each printing procurement in excess of $10,000 shall be approved in advance by the ATBCB.)

(3) Stenographic services.

(4) Office supplies.

(5) Furniture and furnishings.

(6) Services of administrative law judges and expert witnesses in connection with compliance proceedings.

(7) Administrative support services of another Federal agency.

(8) Consultants and related expenses to perform staff functions when appropriate staff has not been hired.

(9) Space acquisition.

(10) Accommodating the known physical handicaps of employees.

(11) Appropriate training of employees.

(12) Meeting other administrative needs of the office.

(g) The Executive Director will report semi-annually in writing to the ATBCB on each procurement, regardless of amount, entered into to date in the fiscal year, listing each procurement separately with its amount and date. In addition, the report shall list all procurements then in progress that have not been awarded and any procurements being considered for any future time.

[46 FR 37045, July 17, 1981, as amended at 48 FR 52911, Nov. 23, 1983]

§1151.5 Voting accessibility policy.

Disabled people are entitled to effective access to voter registration and polling places. The Board encourages States to provide registration and polling facilities that are accessible to physically handicapped persons, including, where appropriate, providing effective supplemental aids and devices for persons with sensory and mobility impairments.

[48 FR 15676, Apr. 12, 1983]

PART 1152—EMPLOYEE RESPONSIBILITIES AND CONDUCT

Subpart A—General Provisions

Sec.
1152.735–101 Purpose.
1152.735–102 Definitions.
1152.735–103 Designated Agency Ethics Official.
1152.735–104 Disciplinary and other remedial action.

Subpart B—Ethical and Other Conduct and Responsibilities of Employees

1152.735–201 Proscribed actions.
1152.735–202 Gifts, entertainment, and favors.
1152.735–203 Outside employment and other activity.
1152.735–204 Financial interests.
1152.735–205 Use of Government property.
1152.735–206 Misuse of information.
1152.735–207 Indebtedness.
1152.735–208 Gambling, betting, and lotteries.
1152.735–209 General conduct prejudicial to the Government.
1152.735–210 Miscellaneous statutory provisions.

Subpart C—Ethical and Other Conduct and Responsibilities of Special Government Employees

1152.735–301 Use of Government employment.
1152.735–302 Use of inside information.
1152.735–303 Coercion.
1152.735–304 Gifts, entertainment, and favors.
1152.735–305 Miscellaneous statutory provisions.

Subpart D—Statements of Employment and Financial Interests

1152.735–401 Reviewing statements and reporting conflicts of interest.
1152.735–402 Employees required to submit statements.
1152.735–403 Employee's complaint on filing requirement.
1152.735–404 Employees not required to submit statements.
1152.735–405 Content of statements.
1152.735–406 Time and place for submission of employees' statement.
1152.735–407 Supplementary statement.
1152.735–408 Interests of employees' relatives.
1152.735–409 Information not known by employees.
1152.735–410 Information not required.
1152.735–411 Confidentiality of employees' statements.
1152.735–412 Effect of employees' statements on other requirements.
1152.735–413 Specific provisions for Public members and special Government employees.

AUTHORITY: E.O. 12674; 5 CFR part 735.

SOURCE: 44 FR 52200, Sept. 7, 1979, unless otherwise noted.

Subpart A—General Provisions

§1152.735–101 Purpose.

The maintenance of unusually high standards of honesty, integrity, impartiality, and conduct by Government employees and special Government employees is essential to assure the proper performance of the Government business and the maintenance of confidence by citizens in their Government. The avoidance of misconduct and conflicts of interest on the part of Government employees and special Government employees through informed judgment is indispensable to the maintenance of these standards. To accord with these concepts, this part sets forth the Board's regulations prescribing standards of conduct and responsibilities, and governing statements reporting employment and financial interests for employees and special Government employees.

§1152.735–102 Definitions.

(a) *Board* means the Architectural and Transportation Barriers Compliance Board.

(b) *Chair* means the Chair of the Architectural and Transportation Barriers Compliance Board.

(c) *Employee* means an officer or employee of the Board but does not include a special Government employee.

(d) *Federal member* means a member of the Board who is the head of a federal agency or a designee as specified in 29 U.S.C. 792(a)(1)(B).

(e) *Person* means an individual, a corporation, a company, an association, a firm, a partnership, a society, a joint stock company, or any other organization or institution.

(f) *Public member* means a member of the Board appointed by the President from among members of the general public.

(g) *Special Government employee* means a ''special Government employee,'' as defined in section 202 of title 18 U.S.C., that is, one appointed or employed to serve, with or without compensation, for not more than 130 days during any period of 365 days on a full-time or intermittent basis.

[44 FR 52200, Sept. 7, 1979, as amended at 56 FR 958, Jan. 10, 1991]

§ 1152.735–103 Designated Agency Ethics Official.

(a) The Chair shall designate in writing an agency ethics official and an alternate agency ethics official to serve in an acting capacity in the absence of the primary Designated Agency Ethics Official.

(b) The Designated Agency Ethics Official shall coordinate and manage the agency's ethics program, including:

(1) Serving as liaison with the Office of Government Ethics;

(2) Reviewing financial disclosure reports;

(3) Conducting ethics education and training programs;

(4) Monitoring administrative actions and sanctions; and

(5) Providing counsel and guidance on matters relating to ethical conduct to employees seeking advice on questions of conflicts of interest and other matters covered by this part.

(c) The Designated Agency Ethics Official may delegate any of the duties in paragraph (b) of this section to a deputy agency ethics official.

[56 FR 958, Jan. 10, 1991]

§ 1152.735–104 Disciplinary and other remedial action.

Violations of the regulations in this part by an employee may be cause for appropriate disciplinary action which may be in addition to any penalty prescribed by law.

[44 FR 52200, Sept. 7, 1979. Redesignated and amended at 56 FR 958, Jan. 10, 1991]

Subpart B—Ethical and Other Conduct and Responsibilities of Employees

§ 1152.735–201 Proscribed actions.

An employee shall avoid any action, whether or not specifically prohibited by this subpart, which might result in, or create the appearance of:

(a) Using public office for private gain;

(b) Giving preferential treatment to any person;

(c) Impeding Government efficiency or economy;

(d) Losing complete independence or impartiality;

(e) Making a Government decision outside official channels; or

(f) Affecting adversely the confidence of the public in the integrity of the Government.

§ 1152.735–202 Gifts, entertainment, and favors.

(a) Except as provided in paragraphs (b) and (f) of this section, an employee shall not solicit or accept, directly or indirectly any gift, gratuity, favor, entertainment, loan, or any other thing of monetary value, from a person who:

(1) Has, or is seeking to obtain, contractual or other business or financial relations with his/her agency;

(2) Conducts operations or activities that are regulated by his/her agency; or

(3) Has interests that may be substantially affected by the performance or nonperformance of his/her official duty.

(b) The prohibitions of paragraph (a) of this section do not apply in the following cases:

(1) Obvious family or personal relationships, such as those between the parents, children, or spouse of the employee and the employee, when the circumstances make it clear that it is those relationships rather than the business of the persons concerned which are the motivating factors;

(2) Acceptance of food and refreshments of nominal value on infrequent

occasions in the ordinary course of a luncheon or dinner meeting or other meeting or on an inspection tour where an employee may properly be in attendance;

(3) The acceptance of loans from banks or other financial institutions on customary terms to finance proper and usual activities of employees, such as home mortgage loans; and

(4) The acceptance of unsolicited advertising or promotional material, such as pens, pencils, note pads, calendars, and other items of nominal intrinsic value.

(c) [Reserved]

(d) An employee shall not solicit a contribution from another employee for a gift to an official superior, make a donation as a gift to an official superior, or accept a gift from an employee receiving less pay than himself/herself (5 U.S.C. 7351). However, this paragraph does not prohibit a voluntary gift of nominal value or donation in a nominal amount made on a special occasion such as marriage, illness, or retirement.

(e) An employee shall not accept a gift, present, decoration, or other thing from a foreign government unless authorized by Congress as provided by the Constitution and in section 7342 of title 5 U.S.C.

(f) Neither this section nor §1152.735–203 precludes an employee from receipt of bona fide reimbursement, unless prohibited by law, for expenses of travel and such other necessary subsistence as is compatible with this part for which no Government payment or reimbursement is made. However, this paragraph does not allow an employee to be reimbursed, or payment to be made on his/her behalf, for excessive personal living expenses, gifts, entertainment, or other personal benefits, nor does it allow an employee to be reimbursed by a person for travel on official business under agency orders when reimbursement is proscribed by Decision B–128527 of the Comptroller General dated March 7, 1967 (46 Comp. Gen. 689).

§1152.735–203 Outside employment and other activity.

(a) An employee shall not engage in outside employment or other outside activity not compatible with the full and proper discharge of the duties and responsibilities of his/her Government employment. Incompatible activities include but are not limited to:

(1) Acceptance of a fee, compensation, gift, payment of expense, or any other thing of monetary value in circumstances in which acceptance may result in, or create the appearance of, conflicts of interest; or

(2) Outside employment which tends to impair his/her mental or physical capacity to perform his/her Government duties and responsibilities in an acceptable manner.

(b) An employee shall not receive any salary or anything of monetary value from a private source as compensation for his/her services to the Government (18 U.S.C. 209).

(c) Employees are encouraged to engage in teaching, lecturing, and writing that is not prohibited by law, the Executive order, Office of Personnel Management or Office of Government Ethics regulations, or this part. However, an employee shall not, either for or without compensation, engage in teaching, lecturing, or writing, including teaching, lecturing or writing for the purpose of the special preparation of a person or class of persons for an examination of the Office of Personnel Management or Board of Examiners for the Foreign Service, that depends on information obtained as a result of his/her Government employment, except when that information has been made available to the general public or will be made available on request, or when the Chair or his/her designee gives written authorization for use of nonpublic information on the basis that the use is in the public interest. In addition, an employee who is a Presidential appointee covered by section 401(a) of the order shall not receive compensation or anything of monetary value for any consultation, lecture, discussion, writing, or appearance the subject matter of which is devoted substantially to the responsibilities, programs, or operations of his/her agency, or which draws substantially on official data or ideas which have not become part of the body of public information.

(d) [Reserved]

(e) This section does not preclude an employee from:

(1) [Reserved]

(2) Participation in the activities of national or State political parties not proscribed by law.

(3) Participation in the affairs of or acceptance of an award for a meritorious public contribution or achievement given by a charitable, religious, professional, social, fraternal, nonprofit educational and recreational, public service, or civic organization.

[44 FR 52200, Sept. 7, 1979, as amended at 56 FR 958, Jan. 10, 1991]

§ 1152.735–204 Financial interests.

(a) An employee shall not have a direct or indirect financial interest that conflicts substantially, or appears to conflict substantially, with his/her Government duties and responsibilities.

(b) An employee shall not engage in, directly or indirectly, a financial transaction as a result of, or primarily relying on, information obtained through his/her Government employment.

(c) This section does not preclude an employee from having a financial interest or engaging in financial transactions to the same extent as a private citizen not employed by the Government so long as it is not prohibited by law, Executive Order, Office of Personnel Management or Office of Government Ethics regulations, or this part.

(d) The following financial or economic interests described below are hereby exempted from the prohibition of 18 U.S.C. 208(a) as being too remote or too inconsequential to affect the integrity of an employee's services in a matter: The stock, bond or policy holdings of an employee in a mutual fund, investment company, bank or insurance company which owns an interest in an entity involved in the matter, provided that in the case of a mutual fund, investment company or bank the fair value of such stock or bond holding does not exceed 1 percent of the value of the reported assets of the mutual fund, investment company, or bank.

[56 FR 958, Jan. 10, 1991]

§ 1152.735–205 Use of Government property.

An employee shall not directly or indirectly use, or allow the use of Government property of any kind, including property leased to the Government, for other than officially approved activities. An employee has a positive duty to protect and conserve Government property, including equipment, supplies, and other property entrusted or issued to him/her.

§ 1152.735–206 Misuse of information.

For the purpose of furthering a private interest, an employee shall not, except as provided in § 1152.735–203(c), directly or indirectly use, or allow the use of, official information obtained through or in connection with his/her Government employment which has not been made available to the general public.

§ 1152.735–207 Indebtedness.

An employee shall pay each just financial obligation in a proper and timely manner, especially one imposed by law such as Federal, State or local taxes. For the purpose of this section, a *just financial obligation* means one acknowledged by the employee or reduced to judgment by a court or one imposed by law such as Federal, State or local taxes, and *in a proper and timely manner* means in a manner which the agency determines does not, under the circumstances, reflect adversely on the Government as his/her employer. In the event of dispute between an employee and an alleged creditor, this section does not require an agency to determine the validity or amount of the disputed debt.

§ 1152.735–208 Gambling, betting, and lotteries.

An employee shall not participate while on Government-owned or leased property or while on duty for the Government, in any gambling activity including the operation of a gambling device, in conducting a lottery or pool, in a game for money or property, or in selling or purchasing a numbers slip or ticket. However, this section does not preclude activities:

(a) Necessitated by an employee's law enforcement duties; or

(b) Under section 3 of Executive Order 10927, namely solicitations conducted by organizations composed of employees among their own members for organizational support or for benefit or welfare funds for their members, or similar Board-approved activities.

§1152.735–209 General conduct prejudicial to the Government.

An employee shall not engage in criminal, infamous, dishonest, immoral, or notoriously disgraceful conduct, or other conduct prejudicial to the Government.

[56 FR 959, Jan. 10, 1991]

§1152.735–210 Miscellaneous statutory provisions.

Each employee shall acquaint himself/herself with each statute that relates to his/her ethical and other conduct as an employee of the Board and of the Government. The attention of each employee is directed to the following statutory provisions:

(a) House Concurrent Resolution 175, 85th Congress, 2d session, 72 Stat. B12, the ''Code of Ethics for Government Service''.

(b) Chapter II of title 18 U.S.C., relating to bribery, graft, and conflicts of interest, as appropriate to the employees concerned.

(c) The prohibition against lobbying with appropriated funds (18 U.S.C. 1913).

(d) The prohibitions against disloyalty and striking (5 U.S.C. 7311, 18 U.S.C. 1918).

(e) The provision relating to honoraria for speeches (2 U.S.C. 441 (i)).

(f) The prohibitions against (1) the disclosure of classified information (18 U.S.C. 798, 50 U.S.C. 783); and (2) the disclosure of confidential information (18 U.S.C. 1905).

(g) The provision relating to the habitual use of intoxicants to excess (5 U.S.C. 7352).

(h) The prohibition against the misuse of Government vehicle (31 U.S.C. 638a(c)).

(i) The prohibition against the misuse of the franking privilege (18 U.S.C. 1719).

(j) The prohibition against the use of deceit in an examination of personnel action in connection with Government employment (18 U.S.C. 1917).

(k) The prohibition against fraud or false statements in a Government matter (18 U.S.C. 1001).

(l) The prohibition against mutilating or destroying a public record (18 U.S.C. 2071).

(m) The prohibition against counterfeiting and forging transportation requests (18 U.S.C. 508).

(n) The prohibitions against (1) embezzlement of government, money or property (18 U.S.C. 641); (2) failing to account for public money (18 U.S.C. 643); and (3) embezzlement of the money or property of another person in the possession of an employee by reason of his/her employment (18 U.S.C. 654).

(o) The prohibition against unauthorized use of documents relating to claims from or by the Government (18 U.S.C. 285).

(p) The prohibitions against political activities in subchapter III of chapter 73 of title 5 U.S.C. and 18 U.S.C. 602, 603, 607, and 608.

(q) The prohibition against an employee acting as the agent of a foreign principal registered under the Foreign Agents Registration Act (18 U.S.C. 219).

[44 FR 52200, Sept. 7, 1979, as amended at 56 FR 959 Jan. 10, 1991]

Subpart C—Ethical and Other Conduct and Responsibilities of Special Government Employees

§1152.735–301 Use of Government employment.

A special Government employee shall not use his/her Government employment for a purpose that is, or gives the appearance of being, motivated by the desire for private gain for himself/herself or another person, particularly one with whom he/she has family business, or financial ties.

§1152.735–302 Use of inside information.

(a) A special Government employee shall not use inside information obtained as a result of his/her Government employment for private gain for

himself or another person either by direct action on his/her part or by counsel, recommendation, or suggestion to another person, particularly one with whom he/she has family, business, or financial ties. For the purpose of this section, *inside information* means information obtained under Government authority which has not become part of the body of public information.

(b) Special Government employees may teach, lecture, or write in a manner consistent with the provisions of § 1152.735–203(c).

§ 1152.735–303 Coercion

A special Government employee shall not use his/her Government employment to coerce, or give the appearance of coercing, a person to provide financial benefit to himself/herself or another person, particularly one with whom he/she has family, business, or financial ties.

§ 1152.735–304 Gifts, entertainment, and favors.

(a) Except as provided in paragraph (b) of this section, a special Government employee, while so employed or in connection with such employment, shall not receive or solicit from a person having business with the agency anything of value as a gift, gratuity, loan, entertainment, or favor for himself/herself or another person, particularly one with whom he/she has family, business, or financial ties.

(b) The exceptions of § 1152.735–202(b) which are applicable to employees, are also applicable to special Government employees.

§ 1152.735–305 Miscellaneous statutory provisions.

Each special Government employee shall acquaint himself/herself with each statute that relates to his/her ethical and other conduct as a special Government employee of his/her agency and of the Government. The attention of each special Government employee is directed to those statutory provisions listed in § 1152.735–210 that are applicable to special Government employees.

Subpart D—Statements of Employment and Financial Interests

§ 1152.735–401 Reviewing statements and reporting conflicts of interest.

(a) Financial statements of all employees shall be filed with the Designated Agency Ethics Official. The Designated Agency Ethics Official shall review statements of employment and financial interests submitted under this part.

(b) When a statement submitted under this part or information from other sources indicates a conflict between the interests of an employee or special Government employee and the performance of his/her service for the Government, the employee, or special Government employee concerned shall be provided an opportunity to explain the conflict or appearance of conflict.

(c) When after explanation by the employee or special Government employee involved, the conflict or appearance of conflict is not resolved by the Designated Agency Ethics Official, the information concerning the conflict or appearance of conflict shall be reported to the Chair for appropriate administrative action.

(d) When after consideration of the explanation of the employee or special Government employee, the Chair decides that remedial action is required, he/she shall take immediate action to end the conflicts or appearance of conflicts of interest.

(e) Remedial action, whether disciplinary or otherwise, shall be effected in accordance with any applicable laws, Executive orders and regulations and may include, but is not limited to:

(1) Changes in assigned duties;

(2) Divestment by the employee or special Government employee of his/her conflicting interest;

(3) Disciplinary action; or

(4) Disqualification for a particular assignment.

[56 FR 959, Jan. 10, 1991]

§ 1152.735–402 Employees required to submit statements.

Except as provided in § 1152.735–404, the following categories of employees shall submit statements of employment and financial interest:

(a) Employees classified at GS–13 or above who are in positions identified by the Chair as positions the incumbents of which are responsible for making a Government decision or taking a Government action in regard to:

(1) Contracting or procurement;

(2) Administering or monitoring grants or subsidies;

(3) Regulating or auditing private or other non-Federal enterprise; or

(4) Other activities where the decision or action has an economic impact on the interest of any non-Federal enterprise.

(b) Employees classified at GS–13 or above who are in positions which the Chair has determined have duties and responsibilities which require the incumbent to report employment and financial interests in order to avoid involvement in a possible conflicts-of-interests situation and carry out the purpose of law, Executive order, Office of Personnel Management and Office of Government Ethics regulations and this part.

(c) Employees classified below GS–13 who are in positions which otherwise meet the criteria in paragraph (b) or (c) of this section. These positions have been approved by the Chair and the Office of Government Ethics as exceptions that are essential to protect the integrity of the Government and avoid employees involvement in a possible conflict-of-interest situation.

[56 FR 959, Jan. 10, 1991]

§1152.735–403 Employee's complaint on filing requirement.

Employees have the opportunity for review through the Board's grievance procedures of a complaint by an employee that his/her position has been improperly included under these regulations as one requiring the submission of a statement of employment and financial interests.

[44 FR 52200, Sept. 7, 1979. Redesignated at 56 FR 959, Jan. 10, 1991]

§1152.735–404 Employees not required to submit statements.

(a) Employees in positions that meet the criteria in §1152.735–402(b) may be excluded from the reporting requirement when the Chair determines that:

(1) The duties of a position are such that the likelihood of the incumbent's involvement in a conflict-of-interest situation is remote;

(2) The duties of a position are at such a level of responsibility that the submission of a statement of employment and financial interests is not necessary because of the degree of supervision and review over the incumbent or the inconsequential effect on the integrity of the Government;

(3) The use of an alternative procedure approved by the Board is adequate to prevent possible conflicts of interest.

(b) Federal members and the Designated Agency Ethics Official are subject to separate reporting requirements under the Ethics in Government Act of 1978, Pub. L. 95–521. The Designated Agency Ethics Official shall obtain and review a copy of the financial statement filed by Federal members with their respective agency. The Office of Government Ethics will review the financial statement filed by the Designated Agency Ethics Official.

[56 FR 959, Jan. 10, 1991]

§1152.735–405 Content of statements.

A statement of employment and financial interest required pursuant to this subpart shall contain, at a minimum, the information required by the formats prescribed by the Office of Personnel Management in the Federal Personnel Manual.

[56 FR 960, Jan. 10, 1991]

§1152.735–406 Time and place for submission of employees' statement.

An employee required to submit a statement of employment and financial interest pursuant to §1152.735–402 shall submit that statement to the Designated Agency Ethics Official not later than:

(a) Ninety days after the effective date of this part if employed on or before that effective date; or

(b) Thirty days after his/her entrance on duty, but not earlier than 90 days after the effective date, if appointed after that effective date.

[56 FR 960, Jan. 10, 1991]

§ 1152.735–407 Supplementary statement.

(a) Changes in, or additions to, the information contained in an employee's statement shall be reported to the Designated Agency Ethics Official in a supplementary statement as of May 15 each year. If no changes or additions occur, a negative report is required.

(b) Notwithstanding the filing of the annual report required by this section, each employee shall at all times avoid acquiring a financial interest or engaging in outside employment or other activity that could result, or taking an action that would result, in a violation of the conflict-of-interest provisions of section 208 of title 18 U.S.C., or subpart B of this part.

[44 FR 52200, Sept. 7, 1979. Redesignated and amended at 56 FR 959–960, Jan. 10, 1991]

§ 1152.735–408 Interests of employees' relatives.

The interest of a spouse, minor child, or other member of an employee's immediate household is considered to be an interest of the employee. For the purpose of this section, *member of an employee's immediate household* means those blood relations who are residents of the employees household.

[56 FR 960, Jan. 10, 1991]

§ 1152.735–409 Information not known by employees.

If any information required to be included on a statement or supplementary statement, including holdings placed in trust, is not known to the employee but is known to another person, the employee shall request that other person to submit information in his/her behalf.

[44 FR 52200, Sept. 7, 1979. Redesignated at 56 FR 959, Jan. 10, 1991]

§ 1152.735–410 Information not required.

This subpart does not require an employee to report information relating to his/her connection with, or interest in, a professional society or a charitable, religious, social, fraternal, recreational, public service, civic, or political organization or a similar organization not conducted as a business enterprise. For the purpose of this section, educational and other institutions doing research and development or related work involving grants of money from or contracts with the Government are deemed ''business enterprises'' and are required to be included in an employee's statement.

[44 FR 52200, Sept. 7, 1979. Redesignated at 56 FR 959, Jan. 10, 1991]

§ 1152.735–411 Confidentiality of employees' statements.

(a) Each statement of employment and financial interest, and each supplementary statement, shall be kept confidential.

(b) The Designated Agency Ethics Official is responsible for maintaining the statements in confidence and shall not allow access to, or allow information to be disclosed from, a statement except to carry out the purpose of this part.

(c) Information from a statement may not be disclosed except as the Office of Government Ethics or the Chair may determine for good cause shown.

[56 FR 960, Jan. 10, 1991]

§ 1152.735–412 Effect of employee's statements on other requirements.

The statements and supplementary statements required of employees pursuant to this part are in addition to, and not in substitution for, or in derogation of, any similar requirement imposed by law, order, or regulation. The submission of a statement or supplementary statement by an employee does not permit him/her or any other person to participate in a matter in which his/her or the other person's participation is prohibited by law, order, or regulation.

[44 FR 52200, Sept. 7, 1979. Redesignated at 56 FR 959, Jan. 10, 1991]

§ 1152.735–413 Specific provisions for Public members and special Government employees.

(a) Except as provided in paragraph (c) of this section, each Public member and special Government employee shall submit to the Designated Agency Ethics Official for review and custody a statement of employment and financial interest which shall contain a listing of all—

(1) Other employment; and

(2) Financial interests in a partnership, organization or entity which have an interest in obtaining, or has obtained, a grant or contract from the Board or which is a party to a complaint pending before the Board.

(b) The provisions of §§1152.735–409 through 1152.735–412 are applicable to a Public member and special Government employee who is required to file a statement.

(c) The Chair or his/her designee may waive the provisions of this section for the submission of a statement in the case of a special Government employee who is not a consultant or an expert when the Board finds that the duties of the position held by that special Government employee are of a nature and at such level or responsibility that the submission of the statement by the incumbent is not necessary to protect the integrity of the Government. For the purpose of this paragraph, *consultant* and *expert* have the meanings given those terms by chapter 304 of the Federal Personnel Manual, but do not include:

(1) A physician, dentist, or allied medical specialist whose services are procured to provide care and service to patients; or

(2) A veterinarian whose services are procured to provide care and service to animals.

(3) A specialist appointed for intermittent confidential intelligence consultation of brief duration.

(d) A statement of employment and financial interest required to be submitted under this section shall be submitted not later than the time of employment of the special Government employee. Each Public member and special Government employee shall keep his/her statement current throughout his/her employment with the Board by the submission of supplementary statements to be filed no later than May 15th of each year. If no changes or additions occur, a negative report is required.

[56 FR 960, Jan. 10, 1991]

PART 1153—AUTHORITIES AND DELEGATIONS

Sec.
1153.1 The Board.
1153.2 Chair.
1153.3 Vice Chair.
1153.4 Executive Director.
1153.5 General Counsel.
1153.6 Committees of the Board.
1153.7 Chief Procurement Officer.
1153.8 Equal employment opportunity.
1153.9 Freedom of Information Officer.
1153.10 Delegations records.

AUTHORITY: 29 U.S.C. 792, as amended.

SOURCE: 53 FR 19777, May 31, 1988, unless otherwise noted.

§1153.1 The Board.

The Board is the governing body of the agency. The composition of the Board and its functions are established by section 502 of the Rehabilitation Act of 1973. The Board has the following duties and responsibilities, including:

(a) To carry out its responsibilities under section 502 of the Rehabilitation Act of 1973, as amended. In carrying out these responsibilities, the Board may hold public hearings throughout the country.

(b) To establish policies and issue regulations in accordance with its statutory mandate.

(c) To resolve issues that are within its jurisdiction.

(d) To determine and adopt a contracting and procurement policy for the agency. In carrying out this responsibility, the Board will enter into contracts only in accordance with its contracting and procurement policy, published in the FEDERAL REGISTER.

(e)(1) To effect the prompt and efficient disposition of all matters within its jurisdiction. In carrying out this responsibility, the Board may in accordance with Article VI of its Statement of Organization and Procedures:

(i) By majority vote delegate to the Executive Committee authority to implement its decisions.

(ii) By two-thirds vote delegate to the Executive Committee any other of its authorities, to the extent permitted by law.

(iii) To the extent permitted by law, delegate other duties to its officers,

committees, or staff by a vote of two-thirds of the membership of the Board at the time the vote is taken.

(2) A separate delegation is necessary for each action the Board desires the Executive Committee to implement. Unless so permitted in the original delegation, an officer, committee, or staff person shall not redelegate authority.

(f) To make to Congress, at the end of each fiscal year, an annual report of the Board's activities during that fiscal year. The annual report shall include such material as it is required by law to include and such other material as the Board may decide.

(g) To make to the President and Congress such other reports as it is required by law to make, and such recommendations as it considers necessary or desirable to eliminate environmental barriers confronting handicapped individuals.

(h) To allocate funds appropriated by the Congress for such activities as conducting investigations and surveys, initiating public hearings, collecting data on past and current studies, and providing stenographic or other services, as necessary, appropriate, and in accordance with law.

(i) To determine the jurisdiction of each standing committee of the Board.

§ 1153.2 Chair.

The Chair represents the Board as the head of the agency, whenever an applicable Federal statute or regulation imposes a duty or grants a right or authority to the head of the agency. The Chair or his or her designee has the following duties and responsibilities:

(a) To coordinate and organize the work of the Board in such a manner as to promote the prompt and efficient disposition of all matters within the jurisdiction of the Board. In carrying out these responsibilities, the Chair is delegated the authority to:

(1) Supervise the Executive Director.

(2) Direct the Executive Director concerning appropriate action to implement decisions of the Board.

(3) Evaluate the Executive Director's performance, and approve performance evaluations of employees who report directly to the Executive Director. A delegation of this authority may only be made to the Vice-Chair of the Board.

(4) Authorize domestic travel for the Executive Director, which authority may be delegated, and authorize foreign travel for staff, Board members and the Executive Director, which authority may not be delegated.

(5) Make necessary administrative decisions for the agency and direct the Executive Director concerning implementation of such decisions during periods when the Board is not in session.

(6) Review and approve publication of the Board newsletter and press releases which contain expressions of Board policy.

(7) Appoint members to the Board's subject matter committees.

(8) Nominate one or more Board members to serve, with their consent, at each public hearing which may be held by the Board.

(9) Request from departments or agencies represented on the Board such technical, administrative, or other assistance as may be required to carry out the Board's activities.

(10) Nominate the General Counsel and Executive Director, who are to be confirmed by the Board.

(b) To preside at all meetings and sessions of the Board.

(c) To establish the Board meeting agenda subject to the approval of the Executive Committee.

(d) To represent the Board in all matters relating to congressional testimony and legislative reports. However, any other Board member may present his or her own or minority views on supplemental reports.

(e) To represent the Board in all matters involving submissions of comments on agencies' proposed regulations and responses to published directives of the Office of Management and Budget. The Board shall be given advance written notice of any action taken under this authority. The Chair may file comments on agencies' draft notices of proposed rulemaking (NPRMs), published NPRMs, final rules, other notices published in the FEDERAL REGISTER, only with advance approval of the Executive Committee.

(f) To call a special meeting of the Board at the request of the Executive Committee, to take action on a request

to the Board to enter litigation as amicus curiae.

(g) To maintain ongoing liaisons with constituency groups and other organizations and with staff of interested congressional committees to keep them informed of general Board policies and activities and to obtain information for use by the Board in formulating policy, developing budget requests, and drafting recommended legislative changes.

(h) To carry out other duties and responsibilities as may be delegated by the Board.

[53 FR 19777, May 31, 1988, as amended at 54 FR 32338, Aug. 7, 1989]

§1153.3 Vice Chair.

The Vice Chair shall, in the absence of the Chair from a Board meeting, or in the event of his or her death or disqualification, perform the duties and exercise the powers of the Chair, and shall generally assist the Chair and perform such other duties as may be directed by the Chairperson or the Board. The Vice-Chair shall serve as Chair of the Executive Committee.

§1153.4 Executive Director.

The Executive Director is nominated by the Chair and confirmed by the Board and is responsible to the Board under the supervision of the Chair. He or she has the following duties and responsibilities:

(a) To assist the Chair in carrying out the administrative and executive responsibilities of the Chair in a manner that may be directed by the Chair. These duties may include acting as the administrative head of the agency and in connection therewith assisting in the planning, directing, coordinating, and managing of the administrative affairs of the Board. In carrying out these responsibilities, the Executive Director may exercise authority delegated to him or her in accordance with the Board's contracting and procurement policy published in the FEDERAL REGISTER. In addition, the Executive Director is delegated the authority to:

(1) Authorize travel expenses for consultants, specialists, experts, witnesses, and other persons whose presence is deemed essential for attendance at Board meetings, hearings, advisory committee meetings or other functions of the Board.

(2) Reimburse members of the board who are not regular fulltime employees of the United States for travel, subsistence, and other necessary expenses incurred in carrying out their duties.

(b) To recommend to the Chair of the Board, matters that should be considered by the Board or any of its designated committees.

(c) To review with the Board and with heads of the several units and offices, the program and procedures of the Board and to make recommendations thereon as may be necessary to administer section 502 of the Rehabilitation Act of 1973 most effectively in the public interest.

(d)(1) To provide administrative leadership, and supervision and management of staff activities in carrying out the policies and decisions of the Board under the direction and supervision of the Chair. Supervision of staff includes:

(i) Authority to detail, reassign and train all staff, hire, fire and promote staff except as prescribed in §1153.2(a)(10) of this part.

(ii) Evaluating the performance of all staff who report directly to the Executive Director and approving the performance evaluations of all other staff.

(iii) Advance approval of work activities which are outside the normal scope of the employee's job duties.

(iv) The utilization and assignment of staff in support of any Board member of Board committee.

(v) All other utilization and assignment of staff.

(2) In carrying out these responsibilities, the Executive Director is delegated the authority to authorize domestic travel for all staff, within the Board designated levels in the budget. Approval by the Chair of the Board is required for any travel expenditures above those designated levels.

(e) To direct compliance and enforcement activities in accordance with the procedures set forth in 36 CFR part 1150 including:

(1) Issuing citations and determinations not to proceed.

(2) Conducting negotiations for compliance, and entering into agreements for voluntary compliance.

(3) All other actions authorized by law pertaining to compliance and enforcement not otherwise reserved to the Board by 29 U.S.C. 792.

(4) Issuing staff manuals which have been approved by the Board, to provide guidance to staff in interpreting the Architectural Barriers Act of 1968 and section 502 of the Rehabilitation Act of 1973, as amended, and standards and guidelines issued pursuant to those Acts. Positions taken in any such manuals will not be inconsistent with established Board policy, and administrative and court rulings, to the maximum extent possible. The manuals will be for staff guidance and will be available to the public upon request.

(f) To direct and supervise the development and execution of routine technical assistance and public information programs, as authorized by law. These activities may be carried out in cooperation with state and local government units, other Federal agencies, and interested consumer groups. Public information program initiatives other than routine program activities shall be approved by the Board in advance.

(g) To provide special administrative assistance to the Board at the request of the Chair.

(h) To direct investigation and research of initiatives submitted by staff or Board members regarding technical assistance or other Board functions.

(i) To propose and implement changes in the functional organization of the Board staff offices, following a written notification to the Board of the nature and reasons for the proposed changes. Personnel actions necessary to implement such changes shall not be approved until there has been a meeting of the Board, following the Board's written notification of the changes.

(j) To submit biweekly reports to the Chair.

(k) To incorporate proposed revisions in the minutes if corrections or additions have be submitted, and present both the original and the corrected minutes to the Board for final approval. The Executive Director shall distribute the approved minutes within the (10) days after approval to: (1) Board members; (2) the House Education and Labor Committee, the House Public Works and Transportation Committee, the Senate Labor and Human Resources Committee, and the Senate Environment and Public Works, Committee; and make minutes available to others upon request.

(l) To refer correspondence by the Board which involves a specific department or agency, to that department or agency for reply.

(m) To account to the Board for the administration of program expenditures and keep records which disclose disposition of any funds and the nature and extent of the Board's activities.

(n) To report semi-annually, in writing, to the Board on each procurement regardless of amount entered into the date in the fiscal year, listing each procurement separately with its amount and date. In addition, the report shall list all procurements then in progress that have not been awarded and any procurements being considered for any future time.

(o) To maintain and keep current a separate file containing all delegations of authority, which shall be in writing, and provide copies of all delegations to the Board as they occur.

[53 FR 19777, May 31, 1988, as amended at 54 FR 32338, Aug. 7, 1989]

§ 1153.5 General Counsel.

The General Counsel is nominated by the Chair and confirmed by the Board. He or she is responsible to the Board under the supervision of the Executive Director. The General Counsel has the following duties and responsibilities:

(a) To coordinate and organize the work of the legal staff in order to provide prompt and comprehensive legal advice to the Board.

(b) To provide legal interpretation of statutes, regulations, and rules of procedure for the Board's consideration.

§ 1153.6 Committees of the Board.

(a) *Committee chairs.* The Vice-Chair of the Board shall be the chair of the Executive Committee. The subject matter committee chairs are elected annualy by the Board. They have the following duties and responsibilities:

(1) To preside at all meetings of their respective committees.

(2) The chair of the Planning and Budget committee will ensure that work on each Board budget is begun no

later than 21 months prior to the date on which the budget is to become operative.

(b) *Executive Committee.* The Executive Committee has the following duties and responsibilities:

(1) To report directly to the Board on matters submitted to the Executive Committee by members and subject matter committees, and all other matters that are within its jurisdiction:

(2) To review and consider recommendations and proposals from the various subject matter committees, and take appropriate action thereon. This may result in recommending to the Chair of the Board that a proposal be placed on the Board agenda for Board action, or referring it back to the subject matter committee for further refinement of its proposals or revision of its reports, or referring it to another committee for appropriate actions.

(3) To issue recommendations to the Chair of the Board concerning proposals on the agenda.

(4) To review the Board's agenda as established by the Chair of the Board.

(5) To assist the Chair in other circumstances at his or her request.

(6) To arrange joint meetings among the appropriate subject matter committees whenever two or more committees have concurrent jurisdiction over a matter, or other related responsibilities.

(7)(i) To review requests to the Board to enter litigation as amicus curiae.

(ii) In carrying out these responsibilities, the Executive Committee is delegated the authority to disapprove such requests and make recommendations to the Board to approve such requests. Board approval shall be required prior to any amicus filing. The Committee may request the Chair of the Board to call a special meeting of the Board to expedite Board action on the Committee's recommendations.

(8) To review and make recommendations to the Board to amend or approve the Board's statement of organization and procedures, formal policy statements, and authorities and delegations.

(9) To carry out other duties and responsibilities as may be duly delegated by the Board.

(c) *Subject matter committees.* Each subject matter committee studies and reports to the Board on matters that are within the subject matter committee's province, and has the following duties and responsibilities:

(1) To review and consider recommendations or proposals submitted by Board members, committees, and other individuals and entities.

(2)(i) To identify issues and develop policy recommendations for review by the Executive Committee. This includes further refinement of matters that are referred from the Executive Committee, and submission of reports containing recommendations or proposals on which action is to be taken by the Board.

(ii) In carrying out these responsibilities, each subject matter committee is delegated the authority to arrange briefings, and research by designated staff, experts, or Federal member agency staff through requests to the Chair or the Executive Director, whichever is appropriate.

(3) To formulate and present projections of matters to be undertaken by the committee to the Planning and Budget Committee.

(4) To project and formulate the need for staff assistance in performing the committee's functions.

(5) To report, at the direction of the Chair of the Board or the committee, the status of matters that are within the committee's particular jurisdiction.

(6) To advise the Board to forward materials originating within the subject matter committee to another committee with jurisdiction over the matter involved.

(d) *Special Committees.* A Special Committee has the duties and responsibilities specified by its creator, who shall report the names of its members and chair to the Chair of the Board.

[53 FR 19777, May 31, 1988, as amended at 54 FR 32338, Aug. 7, 1989]

§1153.7 Chief Procurement Officer.

The Chief Procurement Officer is designated by the Head of the Procuring Activity in accordance with the Board's contracting and procurement

policy published in the FEDERAL REGISTER. He or she has the following duties and responsibilities:

(a) To ensure that staff is provided with equipment and other basic supplies and services that are necessary to perform their duties.

(b) To report to the Head of the Procuring Activity in all other matters pertaining to the agency's needs for supplies and services.

§ 1153.8 Equal employment opportunity.

(a) The Director of Equal Employment Opportunity (EEO Director) is designated by the Chair. The EEO Director has the responsibility on a collateral duty basis, to carry out the functions of the EEO Director, Federal Women's Program Coordinator, Hispanic Employment Program Manager, and Handicap Program Coordinator, in accordance with regulations of the Equal Employment Opportunity Commission.

(b) For the purposes of 29 CFR 1613.221, the Chair of the Board shall make the final decision of the Board on a complaint based on information in the complaint file. The Chair may designate another Board member to discharge this responsibility. A person designated to make the decision for the head of the agency shall be one who is fair, impartial and objective.

§ 1153.9 Freedom of Information Officer.

(a) The Board has the responsibility to disseminate information on matters of interest to the public and to disclose on request all information contained in records in its custody insofar as it is compatible with the discharge of its responsibilities and consistent with the Freedom of Information Act, as amended, 5 U.S.C. 552 and the Board regulations ''Public Availability of Information'' (36 CFR part 1120).

(b) The Board designates the Executive Director as the Freedom of Information (FOI) Officer. The FOI Officer has the responsibility for implementing the policies and procedures to ensure compliance with the requirements of the Freedom of Information Act and the Board regulations. The Executive Director may delegate that responsibility.

§ 1153.10 Delegations records.

All delegations authorized by these Authorities and Delegations shall be made in writing. Records of all such delegations will be maintained by the Executive Director in a separate file.

PART 1154—ENFORCEMENT OF NONDISCRIMINATION ON THE BASIS OF HANDICAP IN PROGRAMS OR ACTIVITIES CONDUCTED BY THE ARCHITECTURAL AND TRANSPORTATION BARRIERS COMPLIANCE BOARD

Sec.

1154.101 Purpose.
1154.102 Application.
1154.103 Definitions.
1154.104—1154.109 [Reserved]
1154.110 Self-evaluation.
1154.111 Notice.
1154.112—1154.129 [Reserved]
1154.130 General prohibitions against discrimination.
1154.131—1154.139 [Reserved]
1154.140 Employment.
1154.141—1154.148 [Reserved]
1154.149 Program accessibility: Discrimination prohibited.
1154.150 Program accessibility: Existing facilities.
1154.151 Program accessibility: New construction and alterations.
1154.152—1154.159 [Reserved]
1154.160 Communications.
1154.161—1154.169 [Reserved]
1154.170 Compliance procedures.

AUTHORITY: 29 U.S.C. 794.

SOURCE: 52 FR 16380, May 5, 1987, unless otherwise noted.

§ 1154.101 Purpose.

The purpose of this part is to effectuate section 119 of the Rehabilitation, Comprehensive Service, and Developmental Disabilities Amendments of 1978, which amended section 504 of the Rehabilitation Act of 1973 to prohibit discrimination on the basis of handicap in programs or activities conducted by Executive agencies or the United States Postal Service.

§ 1154.102 Application.

This part applies to all programs or activities conducted by the agency.

§1154.103 Definitions.

For purposes of this part, the term—

Agency means the Architectural and Transportation Barriers Compliance Board.

Assistant Attorney General means the Assistant Attorney General, Civil Rights Division, United States Department of Justice.

Auxiliary aids means service or devices that enable persons with impaired sensory, manual, and/or speaking skills to have an equal opportunity to participate in, and enjoy the benefits of, programs or activities conducted by the agency. For example, auxiliary aids useful for persons with impaired vision include readers, Brailled materials, audio recordings, telecommunications devices and other similar services and devices. Auxiliary aids useful for persons with impaired hearing include telephones handset amplifiers, telephone compatible with hearing aids, telecommunication devices for deaf persons (TDD's), interpreters, notetakers, written materials, and other similar services and devices.

Complete complaint means a written statement that contains the complainant's name and address and describes the agency's alleged discriminatory action in sufficient detail to inform the agency of the nature and date of the alleged violation of section 504. It shall be signed by the complainant or by someone authorized to do so on his or her behalf. Complaints filed on behalf of classes or third parties shall describe or identify (by name, if possible) the alleged victims of discriminations.

Facility means all or any portion of buildings, structures, equipment, roads, walks, parking lots, rolling stock or other conveyances, or other real or personal property.

Handicapped person means any person who has a physical or mental impairment that substantially limits one or more major life activities, has a record of such an impairment, or is regarded as having such an impairment.

As used in this definition, the phrase:

(1) *Physical or mental impairment* includes—

(i) Any physiological disorder or condition, cosmetic disfigurement, or anatomical loss affecting one or more of the following body systems: neurological; musculoskeletal; special sense organs; respiratory, including speech organs; cardiovascular; reproductive; digestive; genitourinary; hemic and lymphatic; skin; and endocrine; or

(ii) Any mental or psychological disorder, such as mental retardation, organic brain syndrome, emotional or mental illness, and specific learning disabilities. The term *physical or mental impairment* includes, but is not limited to, such diseases and conditions as orthopedic, visual, speech, and hearing impairments, cerebral palsy, epilepsy, muscular dystrophy, multiple sclerosis, cancer, heart disease, diabetes, mental retardation, emotional illness, and drug addiction and alcoholism.

(2) *Major life activities* includes functions such as caring for one's self, performing manual tasks, walking, seeing, hearing, speaking breathing, learning, and working.

(3) *Has a record of such an impairment* means has a history of, or has been misclassified as having, a mental or physical impairment that substantially limits one or more major life activities.

(4) *Is regarded as having an impairment* means—

(i) Has a physical or mental impairment that does not substantially limit major life activities but is treated by the agency as constituting such a limitation;

(ii) Has a physical or mental impairment thaqt substantially limits major life activities only as a result of the attitudes of others toward such impairment; or

(iii) Has none of the impairments defined in subparagraph (1) of this definition but is treated by the agency as having such an impairment.

Qualified handicapped person means—

(1) With respect to any agency program or activity under which a person is required to perform services or to achieve a level of accomplishment, a handicapped person who meets the essential eligibility requirements and who can achieve the purpose of the program or activity without modifications in the program or activity that the agency can demonstrate would result in a fundamantal alteration in its nature; and

(2) With respect to any other program or activity, a handicapped person who meets the essential eligibility requirements for participation in, or receipt of benefits from, that program or activity.

(3) Qualified Handicapped Person is defined for purposes of employment in 29 CFR 1613.702(f) which is made applicable to this part by § 1154.140.

Section 504 means section 504 of the Rehabilitation Act of 1973 (Pub. L. 93–112, 87 Stat. 394 (29 U.S.C. 794)), as amended by the Rehabilitation Act Amendments of 1974 (Pub. L. 93–516, 88 Stat. 1617), and the Rehabilitation, Comprehensive Services, and Developmental Disabilities Amendments of 1978 (Pub. L. 95–602, 92 Stat. 2955). As used in this part, section 504 applies only to programs or activities conducted by Executive agencies and not to federally assisted programs.

§§ 1154.104—1154.109 [Reserved]

§ 1154.110 Self-evaluation.

(a) By July 6, 1988, the agency shall evaluate its current policies and practices, and the effects thereof, that do not or may not meet the requirements of this part, and, to the extent modification of any such policies and practices is required, the agency shall proceed to make the necessary modifications.

(b) The agency shall provide an opportunity to interested persons, including handicapped persons or organizations representing handicapped persons, to participate in the self-evaluation process by submitting comments (both oral and written).

(c) The agency shall, for all least three years following completion of the evaluation required under paragraph (a) of this section, maintain on file and make available for public inspection—

(1) A description of areas examined and any problems identified; and

(2) A description of any modifications made.

§ 1154.111 Notice.

The agency shall make available to employees, applicants, participants, beneficiaries, and other interested persons such information regarding the provisions of this part and its applicability to the programs or activities conducted by the agency, and made such information available to them in such manner as the agency head finds necessary to apprise effectively such persons of the protections against discrimination assured them by section 504 and this regulation.

§§ 1154.112—1154.129 [Reserved]

§ 1154.130 General prohibitions against discrimination.

(a) No qualified handicapped person shall, on the basis of handicap, be excluded from participation in, be denied the benefits of, or otherwise be subjected to discrimination under any program or activity conducted by the agency.

(b)(1) The agency, in providing any aid, benefit, or service, may not, directly or through contractual, licensing, or other arrangements, on the basis of handicap—

(i) Deny a qualified handicapped person the opportunity to participate in or benefit from the aid, benefit, or service;

(ii) Afford a qualified handicapped person an opportunity to participate in or benefit from the aid, benefit, or service that is not equal to that afforded others;

(iii) Provide a qualified handicapped person with an aid, benefit, or service that is not as effective in affording equal opportunity to obtain the same result, to gain the same benefit, or to reach the same level of achievement as that provided to others;

(iv) Provide different or separate aid, benefits, or servcies to handicapped persons or to any class of handicapped persons than is provided to others unless such action is necessary to provide qualified handicapped persons with aid, benefits, or services that are as effective as those provided to others;

(v) Deny a qualified handicapped person the opportunity to participate as a member of planning or advisory boards; or

(vi) Otherwise limit a qualified handicapped person in the enjoyment of any right, privilege, advantage, or opportunity enjoyed by others receiving the aid, benefit, or service.

(2) The agency may not deny a qualified handicapped person the opportunity to participate in programs or activities that are not separate or different, despite the existence of permissibly separate of different programs or activities.

(3) The agency may not, directly or through contractual or other arrangements, utilize criteria or methods of administration the purpose or effect of which would—

(i) Subject qualified handicapped persons to discrimination on the basis of handicap; or

(ii) Defeat or substantially impair accomplishment of the objectives of a program or activity with respect to handicapped persons.

(4) The agency may not, in determining the site or location of a facility, make selections the purpose or effect of which would—

(i) Exclude handicapped persons from, deny them the benefits of, or otherwise subject them to discrimination under any program or activity conducted by the agency; or

(ii) Defeat or substantially impair the accomplishment of the objectives of a program or activity with respect to handicapped persons.

(5) The agency, in the selection of procurement contractors, may not use criteria that subject qualified handicapped persons to discrimination on the basis of handicap.

(c) The exclusion of nonhandicapped persons from the benefits of a program limited by Federal statute or Executive order to handicapped persons or the exclusion of a specific class of handicapped persons from a program limited by Federal statute or Executive order to a different class of handicapped persons is not prohibited by this part.

(d) The agency shall administer programs and activities in the most integrated setting appropriate to the needs of qualified handicapped persons.

§§ 1154.131—1154.139 [Reserved]

§ 1154.140 Employment.

No qualified handicapped person shall, on the basis of handicap, be subjected to discrimination in employment under any program or activity conducted by the agency. The definitions, requirements, and procedures of section 501 of the Rehabilitation Act of 1973 (29 U.S.C. 791), as established by the Equal Employment Opportunity Commission in 29 CFR part 1613, shall apply to employment in federally-conducted programs or activities.

§§ 1154.141—1154.148 [Reserved]

§ 1154.149 Program accessibility: Discrimination prohibited.

Except as otherwise provided in § 1154.150, no qualified handicapped person shall, because the agency's facilities are inaccessible to or unusable by handicapped persons, be denied the benefits of, be excluded from participation in, or otherwise be subjected to discrimination under any program or activity conducted by the agency.

§ 1154.150 Program accessibility: Existing facilities.

(a) *General.* The agency shall operate each program or activity so that the program or activity, when viewed in its entirety, is readily accessible to and usable by handicapped persons. This paragraph does not—

(1) Necessarily require the agency to make each of its existing facilities accessible to and usable by handicapped persons; or

(2) Require the agency to take any action that it can demonstrate would result in a fundamental alteration in the nature of a program or activity or in undue financial and administrative burdens. In those circumstances where agency personnel believe that the proposed action would fundamentally alter the program or activity or would result in undue financial and administrative burdens, the agency has the burden of proving that compliance with § 1154.150(a) would result in such alteration or burdens. The decision that compliance would result in such alteration or burdens must be made by the agency head or his/her designee after considering all agency resources available for use in the funding and operation of the conducted program or activity, and must be accompanied by a written statement of the reasons for reaching that conclusion. If an action would result in such an alteration or

such burdens, the agency shall take any other action that would not result in such an alteration or such burdens but would nevertheless ensure that handicapped persons receive the benefits and services of the program or activity.

(b) *Methods.* The agency may comply with the requirements of this section through such means as redesign of equipment, reassignment of services to accessible buildings, assignment of aides to beneficiaries, home visits, delivery of services at alternate accessible sites, alteration of existing facilities and construction of new facilities, use of accessible rolling stock, or any other methods that result in making its programs or activities readily accessible to and usable by handicapped persons. The agency is not required to make structural changes in existing facilities where other methods are effective in achieving compliance with this section. The agency, in making alterations to existing buildings, shall meet accessibility requirements to the extent compelled by the Architectural Barriers Act of 1968, as amended (42 U.S.C. 4151–4157), and any regulations implementing it. In choosing among available methods for meeting the requirements of this section, the agency shall give priority to those methods that offer programs and activities to qualfied handicapped persons in the most integrated setting appropriate.

(c) *Time period for compliance.* The agency shall comply with the obligations established under this section by September 4, 1987 except that where structural changes in facilities are undertaken, such changes shall be made by July 6, 1990, but in any event as expeditiously as possible.

(d) *Transition plan.* In the event that structural changes to facilities will be undertaken to achieve program accessibility, the agency shall develop by January 6, 1988, a transition plan setting forth the steps necessary to complete such changes. The agency shall provide an opportunity to interested persons, including handicapped persons or organizations representing handicapped persons, to participate in the development of the transition plan by submitting comments (both oral and written). A copy of the transition plan shall be made available for public inspection. The plan shall, at a minimum—

(1) Identify physical obstacles in the agency's facilities that limit the accessibility of its programs or activities to handicapped persons;

(2) Describe in detail the methods that will be used to make the facilities accessible;

(3) Specify the schedule for taking the steps necessary to achieve compliance with this section and, if the time period of the transition plan is longer than one year, identify steps that will be taken during each year of the transition period; and

(4) Indicate the official responsible for implementatin of the plan.

§ 1154.151 Program accessibility: New construction and alterations.

Each building or part of a building that is constructed or altered by, on behalf of, or for the use of the agency shall be designed, constructed, or altered so as to be readily accessible to and usable by handicapped persons. The definitions, requirements and standards of the Architectural Barriers Act (42 U.S.C. 4151–4157), as established in 41 CFR 101–19.600 to 101–19.607, apply to buildings covered by this section.

§§ 1154.152—1154.159 [Reserved]

§ 1154.160 Communications.

(a) The agency shall take appropriate steps to ensure effective communication with applicants, participants, personnel of other Federal entities, and members of the public.

(1) The agency shall furnish appropriate auxiliary aids where necessary to afford a handicapped person an equal opportunity to participate in, and enjoy the benefits of, the program or activity conducted by the agency.

(i) In determining what type of auxiliary aid is necessary, the agency shall give primary consideration to the requests of the handicapped person.

(ii) The agency need not provide individually prescribed devices, readers for personal use or study, or other devices of a personal nature.

(2) Where the agency communicates with applicants, beneficiaries, and members of the public by telephone,

telecommunications devices for deaf persons (TDD's) or equally effective telecommunication systems shall be used.

(b) The agency shall ensure that interested person, including persons with impaired vision, speech or hearing, can obtain information as to the existence and location of accessible services, activities, and facilities.

(c) The agency shall provide signage at a primary entrance to each of its inaccessible facilities, directing users to a location at which they can obtain information about accessible facilities. The international symbol for accessibility shall be used at each primary entrance of an accessible facility.

(d) This section does not require the agency to take any action that it can demonstrate would result in a fundamental alteration in the nature of a program or activity or in undue financial and administrative burdens.

In those circumstances where agency personnel believe that the proposed action would fundamentally alter the program or activity or would result in undue financial and administrative burdens, the agency has the burden of proving that compliance with §1154.160 would result in such alteration or burdens. The decision that compliance would result in such alteration or burdens must be made by the agency head or his/her designee after considering all agency resources available for use in the funding and operation of the conducted program or activity, and must be accompanied by a written statement of the reasons for reaching that conclusion. If an action required to comply with this section would result in such an alteration or such burdens, the agency shall take any other action that would not result in such an alteration or such burdens but would nevertheless ensure that, to the maximum extent possible, handicapped persons receive the benefits and services of the program or activity.

[52 FR 16380, May 5, 1987, as amended at 53 FR 24265, June 28, 1988]

§§1154.161—1154.169 [Reserved]

§1154.170 Compliance procedures.

(a) Except as provided in paragraph (b) of this section, this section applies to all allegations of discrimination on the basis of handicap in programs or activities conducted by the agency.

(b) The agency shall process complaints alleging violations of section 504 with respect to employment according to the procedures established by the Equal Employment Opportunity Commission in 29 CFR part 1613 pursuant to section 501 of the Rehabilitation Act of 1973 (29 U.S.C. 791).

(c) Responsiblity for implementation and operation of this section shall be vested in the Equal Employment Opportunity Director.

(d) Complaints may be delivered or mailed to the Equal Employment Opportunity Director, ATBCB, 330 C Street, SW., Rm. 1010, Washington, DC 20202.

(e) The agency shall accept and investigate all complete complaints over which it has jurisdiction. All complete complaints must be filed within 180 days of the alleged act of discrimination. The agency may extend this time period for good cause.

(f) If the Equal Employment Opportunity Director receives a complaint that is not complete, he or she shall notify the complainant, within 30 days of receipt of the incomplete complaint, that additional information is needed. If the complainant fails to complete the complaint within 30 days of receipt of this notice, the Equal Employment Opportunity Director shall dismiss the complaint without prejudice, and shall notify the complainant of such dismissal.

(g) If the agency receives a complaint over which it does not have jurisdiction, it shall promptly notify the complainant and shall make reasonable efforts to refer the complaint to the appropriate government entity.

(h) The agency shall notify the Director of the Compliance and Enforcement Division of any complaint alleging that a building or facility is not readily accessible to and usable by handicapped persons. The Director of the Compliance and Enforcement Division shall determine whether or not the building or facility is subject to the Architectural Barriers Act of 1968, as amended (42 U.S.C. 4151–4157), or section 502 of the Rehabilitation Act of 1973, as amended (29 U.S.C. 792).

(i) Within 180 days of the receipt of a complete complaint over which it has jurisdiction, the agency shall notify the complainant of the results of the investigation in a letter containing—

(1) Findings of fact and conclusions of law;

(2) A description of a remedy for each violation found; and

(3) A notice of the right to appeal.

(j) Appeals of the findings of fact and conclusions of law or remedies must be filed by the complainant within 90 days of receipt from the agency of the letter required by §1154.170(g). The agency may extend this time for good cause.

(k) Timely appeals shall be accepted and processed by the head of the agency.

(l) The head of the agency shall notify the complainant of the results of the appeal within 60 days of the receipt of the request. If the head of the agency determines that additional information is needed from the complainant, he/she shall have 60 days from the date of receipt of the additional information to make his/her determination on the appeal.

(m) The time limits cited in paragraphs (i) and (l) of this section may be extended with the permission of the Assistant Attorney General.

(n) The agency may delegate its authority for conducting complaint investigations to other Federal agencies, except that the authority for making the final determination may not be delegated to another agency.

PART 1155—STATEMENT OF ORGANIZATION AND PROCEDURES

Sec.

1155.1 Organization and membership.
1155.2 Board meetings.
1155.3 Committees.
1155.4 General Counsel.
1155.5 Fiscal accountability.
1155.6 Delegations.
1155.7 Amendments to the Statement of Organization and Procedures.
1155.8 Amendments to the authorities and delegations.

AUTHORITY: 29 U.S.C. 792, as amended.

SOURCE: 53 FR 19780, May 31, 1988, unless otherwise noted.

§1155.1 Organization and membership.

(a) *Name and organization.* The name of this organization is the Architectural and Transportation Barriers Compliance Board (hereinafter referred to as the *Board*) as provided in section 502 of the Rehabilitation Act of 1973.

(b) *Authorization for the Board.* The statutory authorization for the Board is section 502 of the Rehabilitation Act of 1973, as amended.

(c) *Officers of the Board.* The presiding officers of the Board shall be a Chair and in his or her absence or disqualification a Vice-Chair. The Chair and Vice-Chair shall be elected by a majority of the fixed membership of the Board and shall serve for terms of one year. When the Chair is a member of the general public, the Vice-Chair shall be a Federal official; and when the Chair is a Federal official, the Vice-Chair shall be a member of the general public. Upon the expiration of the term as Chair of a member who is a Federal official, the subsequent Chair shall be a member of the general public; and vice versa. If no new Chair or Vice-Chair has been elected at the end of the one-year term, the incumbents shall continue to serve in that capacity until a successor Chair or Vice-Chair has been elected. The election of officers shall be held at the regularly scheduled Board meeting in September of each year.

(d) *Membership.* The Board shall be composed of Presidentially appointed public members and the heads of each of the following departments or agencies (or their designees whose positions (or acting positions) are Executive Level IV or higher):

(1) Department of Education;

(2) Department of Health and Human Services;

(3) Department of Transportation;

(4) Department of Housing and Urban Development;

(5) Department of Labor;

(6) Department of Interior;

(7) Department of Defense;

(8) Department of Justice;

(9) General Services Administration;

(10) United States Postal Service; and

(11) Department of Veterans Affairs.

(e) *Board vacancies.* (1) If any public member becomes a Federal employee,

such member may continue as a member of the Board for not longer than the sixty-day period beginning on the day he or she becomes such an employee.

(2) If any public member is unable to fulfill his or her obligation as a member, the member shall notify the Chair and the President.

(3) A public member appointed to fill a vacancy shall serve for the remainder of the term to which that member's predecessor was appointed.

(4) A public member whose term has expired may continue to serve until a successor has been appointed.

[53 FR 19780, May 31, 1988, as amended at 54 FR 32338, Aug. 7, 1989; 56 FR 2851, Jan. 25, 1991]

§1155.2 Board meetings.

Regular meetings of the Board shall ordinarily be held on the Wednesday following the second Tuesday of every other month, except as otherwise provided in paragraphs (a)(2) and (4) of this section. Whenever possible, all business shall be transacted at the regular meeting. The Board may elect to convene in executive sessions.

(a) *Prior notification.* (1) The Chair shall provide a written notice of scheduled Board meetings, and an agenda for the meeting, including supporting materials, to each Board member, ten (10) work days prior to the meeting.

(2) The Chair may cancel a regular meeting of the Board by giving written notice of the cancellation in place of the written notice of the scheduled Board meeting at least ten (10) work days prior to the meeting.

(3) Special meetings of the Board shall be called by the Chair to deal with important matters arising between regular meetings which require urgent action by the Board prior to the next regular meeting. Voting and discussion shall be limited to the subject matter which necessitated the call of the special meeting. All Board members shall be notified of the time, place, and exact purpose of the special meeting a reasonable time in advance.

(4) The Chair may reschedule a regular meeting of the Board to another date, no more than one month earlier or later than the regularly scheduled date.

(b) *Attendance.* (1) If a Board member is unable to attend a regularly scheduled meeting, he or she shall notify the Executive Director at his or her earliest convenience.

(2) A list of Board members present and those Board members absent shall become a part of the permanent record through its inclusion in the minutes.

(3) In order to maintain an orderly meeting, discussion shall be among Board members and the Executive Director. Board staff and Federal member staff may participate in the discussion of a specific issue only at the request of a Board member present at the meeting or the Executive Director, and upon recognition by the Chair.

(c) *Rules for Board meetings.* (1) Meetings of the Board shall be held in accordance with Robert's Rules of Order, except as otherwise prescribed herein.

(2) The Board shall not suspend the rules in taking an action concerning adoption, amendment or rescission of this Statement of Organization and Procedures nor the Board's Authorities and Delegations.

(d) *Quorum.* (1) A quorum shall be the majority (12) of the fixed membership. At least six of the members required for a quorum shall be public members.

(2) Proxies shall not be counted for purposes of establishing a quorum.

(3) The presiding officer shall not call a meeting to order unless a quorum is present. If at anytime during the meeting the Chair or a member notices the absence of a quorum, it shall be his or her duty to declare the fact. However, debate on a question pending may continue after a quorum is not longer present.

(4) In the absence of a quorum the Board members present may move to recess in order to contact absent members and solicit their attendance.

(e) *Voting procedure.* (1) Only Board members or Federal member designees, Executive Level IV or higher, may vote.

(2) Except as otherwise prescribed herein, at a meeting at which there is a quorum a majority vote of the members present in person or by proxy is necessary for action by the Board.

(3) The presiding officer shall have the same right to vote as any other member.

(4) *Proxy voting.* (i) Except as provided in § 1155.2 (d)(2) and (e)(4)(iv) of this section, proxy voting shall be permitted.

(ii) Any member may give his or her directed or undirected proxy to any other Board member or any Federal member designee, Excutive Level IV or higher, present at the meeting.

(iii) Proxies are to be given in writing and submitted to the Chair prior to or at the meeting.

(iv) A directed proxy shall be voided as to a specific issue if the question on which the vote is eventually taken differs from the question to which the proxy is directed.

(5) A requirement of a ⅔ vote shall mean ⅔ of the members present in person or by proxy, at a meeting at which there is a quorum, except as provided in §§ 1155.6(b), 1155.7 and 1155.8 of this part.

(f) *The order of business.* Except as otherwise prescribed herein, a proposal for Board action cannot be considered by the Board unless it is placed on the agenda by the Chair of the Board, with the approval of the Executive Committee.

(g) *The basic procedures.* (1) Any member wishing to submit a proposal for Board action will submit it directly to the Chair of the Board, by delivering copies of the proposal to the Board office, addressed to the Chair of the Board. Upon receiving a proposal from a Board member, the Chair may direct the Executive Director to forward copies of the proposal to appropriate subject matter committee(s) and/or the Executive Committee.

(2) Upon receipt of a proposal from a Board member, or a proposal originating from within a committee, subject matter committees will review the proposal, including determining whether the proposal is within their jurisdiction, and, if so, identifying the issues involved, and refining the proposal. Committees may request a report from staff or the member submitting the proposal. Each committee taking any action on the proposal will submit it with an accompanying report and recommendations to the Chair of the Board.

(3) The Chair may take action on a member's proposal without receiving a report from a subject matter committee when, after reviewing the proposal, he or she determines that the proposal does not need further development for Board consideration. The Chair's review may include requesting a report from staff or the member submitting the proposal, or calling a meeting of the Executive Committee.

(4) When the Chair of the Board receives a recommendation from the subject matter committee, the Chair will review the recommendation and take appropriate action thereon. This may result in placing the recommendation on the next Board agenda or sending it back to the subject matter committee or to another committee, for appropriate action.

(h) *Agenda.* The Chair places items of business on the Board agenda. A written notice of ten (10) work days to the full Board is required for an item to become part of the Board's agenda. The ten (10) days notice requirement may be waived upon a two-thirds vote by the Board to suspend the rules of order.

(i) *Discharge procedure.* Seventy-five (75) days after a proposal is first received by the Chair of the Board, any member has a right to discharge the proposal. For purposes of this paragraph, a proposal is received by the Chair the day it is delivered to the Chair at the Board office. In order to exercise a discharge, the discharging member must provide written notice to the Chair of the Board, the Executive Committee, appropriate subject matter committee(s) and the Executive Director thirty (30) days prior to the next Board meeting. Upon the Chair's receipt of a timely discharge notice, the proposal must be placed on the next regular Board agenda.

(j) *Corrections, additions, or approval of Board minutes.* (1) The Executive Director shall send draft minutes of the previous meeting to each Board member within fifty (50) days following the meeting. Any corrections shall be submitted orally or in writing at or before the next Board meeting.

(2) The Board will approve the final minutes after all corrections and additions have been incorporated.

(k) *Notational voting.* The Board may act on items of business by notational voting. At the request of the Chair, the

Executive Director shall send a written ballot to each Board member describing each matter submitted for notational voting. If any Board member requests discussion on an item, the ballots shall not be counted and the Chair shall place the item on the next Board meeting agenda for discussion and voting.

[53 FR 19780, May 31, 1988, as amended at 54 FR 32338, Aug. 7, 1989; 55 FR 12639, Apr. 5, 1990]

§1155.3 Committees.

The Board may, by a two-thirds vote, establish or dissolve standing committees, and change the number, size and jurisdiction of standing committees. Meetings of the committees shall be held in accordance with Robert's Rules of Order, except as otherwise prescribed herein. The use of proxies shall be prohibited at Executive and subject matter committee meetings except as otherwise prescribed herein. A Committee may establish its own additional procedures provided that they do not conflict with the provisions of this Statement, and the Committee informs the Chair of the Board in writing of any additional procedures.

(a) *Executive Committee*—(1) *Composition.* The Executive Committee shall be composed of six members, three Federal and three public members, which shall include the Chair and the Vice-Chair of the Board and the chairs of each of the two subject matter committees and two at large members. The two at large members shall balance the number of Federal and public members and shall be elected annually by the Board after the election of the Chair and Vice-Chair of the Board and the chairs of the two subject matter committees. Its chair shall be the Vice-Chair of the Board.

(2) *Quorum.* A quorum in the Executive Committee shall be four members, present in person. In the absence of a quorum, a meeting can be held only for the purpose of discussion and no vote may be taken.

(3) *Voting.* Only members of the committee may vote in the committee meetings. Any other Board member may attend and participate in the meeting, but may not vote.

(4) *Request for legal opinion from the Department of Justice.* The Executive Committee may, by a majority vote, seek legal advice on any matter from the Office of Legal Counsel, United States Department of Justice. The Board shall not be bound by the opinion of the Office of Legal Counsel.

(b) *Subject matter committees*—(1) *Composition.* Each subject matter committee shall be comprised of seven members. The Chair of each committee shall be elected annually by the Board. The Chair of the Board will appoint six additional members to each subject matter committee for a total of seven members in each. Each chair of each committee, may appoint an acting chair when the chair is absent.

(2) *Terms.* The members of each committee will serve a term of one year corresponding to that of the chair, and continue their duties until their successors have been appointed.

(3) *Quorum.* A quorum in a subject matter committee shall be four members, present in person or, in the case of Federal members, the liaison may represent the Federal member in subject matter committees for the limited purpose of establishing a quorum. In the absence of a quorum, a meeting may be held only for the purpose of discussion.

(4) *Voting.* Only committee members may vote in the committee meetings. Any other Board member, agency staff and the Board staff may attend and participate in meetings but may not vote.

(c) *Special committees.* The Chair, the Board, or a standing committee may appoint a special committee to carry out a specific task. A special committee shall dissolve upon completion of its task or when dissolved by its creator. A special committee shall be governed by the same rules and procedures applicable to subject matter committees unless otherwise prescribed.

(d) *Minutes.* Each Committee will keep a written record of the proceedings.

[53 FR 19780, May 31, 1988, as amended at 54 FR 32338, Aug. 7, 1989]

§1155.4 General Counsel.

(a) The General Counsel is nominated by the Chair and confirmed by the

Board. He or she is responsible to the Board under the supervision of the Executive Director.

(b) The General Counsel shall attend Board meetings and provide legal counsel when requested or when he or she deems it advisable and upon recognition by the Chair.

§ 1155.5 Fiscal accountability.

Board funds shall not substitute for resources an agency should spend for activities under its own research and development or other programmatic or adminsitrative authority. However, the Board may augment current studies by additional funding to insure a focus for particular information on barriers confronting handicapped individuals.

§ 1155.6 Delegations.

(a) The Board may—

(1) By majority vote delegate to the Executive Committee authority to implement its decisions, and

(2) By two-thirds vote delegate to the Executive Committee any other of its authorities, to the extent permitted by law. A separate delegation is necessary for each action the Board desires the Executive Committee to implement.

(b) The Board may, to the extent permitted by law, delegate other duties to its officers, committees, or staff by a vote of two-thirds of the membership of the Board at the time the vote is taken.

(c) Unless so permitted in the original delegation, an officer, committee, or staff person shall not redelegate authority.

§ 1155.7 Amendments to the Statement of Organization and Procedures.

In order to adopt and amend the Statement of Organization and Procedures, a vote of two-thirds of the membership of the Board at the time the vote is taken shall be required.

§ 1155.8 Amendments to the authorities and delegations.

In order to adopt and amend the Authorities and Delegations, a vote of two-thirds membership of the Board at the time the vote is taken shall be required.

PART 1190—MINIMUM GUIDELINES AND REQUIREMENTS FOR ACCESSIBLE DESIGN

Subpart A—General

Sec.
1190.1 Purpose.
1190.2 Applicability: Buildings and facilities subject to guidelines and standards.
1190.3 Definitions.
1190.4 Issuance of Architectural Barriers Act standards by standard-setting agencies.
1190.5 Guidelines: Other uses.
1190.6 Interpretation of guidelines.
1190.7 Severability.

Subpart B—Scope

1190.30 Scope. [Reserved]
1190.31 Accessible buildings and facilities: New construction.
1190.32 Accessible buildings and facilities: Additions.
1190.33 Accessible buildings and facilities: Alterations.
1190.34 Accessible buildings and facilities: Leased.

Subpart C—Technical Provisions

1190.40 Technical specifications.
1190.50 Exceptions.

Subpart D—Special Building or Facility Types or Elements

1190.60 Special building or facility types.

AUTHORITY: Sec. 502(b), Rehabilitation Act of 1973 (29 U.S.C. 792(b)(7)), as amended by the Rehabilitation, Comprehensive Services, and Developmental Disabilities Amendments of 1978 (sec. 119, Pub. L. 602, 92 Stat. 2982, and the Rehabilitation Act Amendments of 1986 (Pub. L. 99–506, 100 Stat. 1801).

SOURCE: 47 FR 33864, Aug. 4, 1982, unless otherwise noted.

Subpart A—General

§ 1190.1 Purpose.

The purpose of this part is to implement section 502(b)(7) of the Rehabilitation Act of 1973 (29 U.S.C. 792(b)(7)), as amended, which requires the Architectural and Transportation Barriers Compliance Board to establish minimum guidelines and requirements for standards issued under the Architectural Barriers Act of 1968 (42 U.S.C. 4151 *et seq.*), as amended. This part and the

standards to be based on it are intended to ensure that certain buildings and facilities financed with Federal funds are designed, constructed, or altered so as to be readily accessible to, and usable by, physically handicapped persons.

§1190.2 Applicability: Building and facilities subject to guidelines and standards

(a) *Definitions.* As used in this section, the term:

(1) *Constructed or altered on behalf of the United States* means constructed or altered for purchase by the United States, or constructed or altered for the use of the United States.

(2) *Primarily for use by able-bodied military personnel* means expected to be occupied, used, or visited principally by military service personnel. Examples of buildings so intended are barracks, officers' quarters, and closed messes.

(3) *Privately owned residential structures* means a single or multifamily dwelling not owned by a unit or subunit of Federal, state, or local government.

(b) *Buildings and facilities covered.* Except as provided in paragraph (c) of this section, the standards to be issued by the standard-setting agencies in conformance with these minimum guidelines and requirements apply as provided in paragraph (d) of this section to any building or facility—

(1) The intended use for which either—

(i) Will require that such building or facility be accessible to the public, or

(ii) May result in employment or residence therein of physically handicapped persons; and

(2) Which is—

(i) To be constructed or altered by or on behalf of the United States;

(ii) To be leased in whole or in part by the United States after August 12, 1968, and before January 1, 1977, after construction or alteration in accordance with plans and specifications of the United States;

(iii) To be leased in whole or in part by the United States on or after January 1, 1977;

(iv) To be financed in whole or in part by a grant or loan made by the United States after August 12, 1968, if the building or facility may be subject to standards for design, construction, or alteration issued under the law authorizing the grant or loan; or

(v) To be constructed under the authority of the National Capital Transportation Act of 1960, the National Capital Transportation Act of 1965, or Title III of the Washington Metropolitan Area Transit Regulation Compact.

(c) *Buildings and facilities not covered.* The guidelines and requirements and the standards do not apply to—

(1) Any privately owned residential structure, unless it is leased by the Federal government on or after January 1, 1977, for subsidized housing programs; or

(2) Any building or facility on a military installation designed and constructed primarily for use by able-bodied military personnel.

(d) *Application and effective date of standards.* Any covered building or facility, as provided in this section, which is designed, constructed, or altered after the effective date of a standard issued in conformance with this guideline which is applicable to the building or facility, shall be designed, constructed, or altered in accordance with the standard. Any other building or facility covered by the Architectural Barriers Act, if and when required by law, shall comply with such standards issued in conformance with this part as are appropriate.

[47 FR 33864, Aug. 4, 1982, as amended at 54 FR 5444, Feb. 3, 1989]

§1190.3 Definitions.

As used in this part, the term:

ATBCB means the Architectural and Transportation Barriers Compliance Board.

Access aisle means a pedestrian space between elements such as parking spaces, seating, and desks.

Accessible means in compliance with the specifications and requirements of any applicable standard issued by a standard-setting agency in conformance with this part. *Accessible* describes a site, building, facility, or portion thereof that complies with these requirements, and that can be approached, entered, and used by physically handicapped persons. Accessible

elements and spaces of a building or facility including doors provided adjacent to a turnstile or a revolving door, shall be subject to the same use patterns as other elements and spaces of the building or facility.

Accessible route means a continuous unobstructed path connecting accessible elements and spaces in a building or facility and complying with the space and reach requirements of any standard issued by a standard-setting agency in conformance with this part. (Interior accessible routes may include but are not limited to corridors, floors, ramps, elevators, lifts, and clear floor space at fixtures. Exterior accessible routes may include but are not limited to parking access aisles, curb ramps, walks, ramps, and lifts.)

Accessible space means a space that complies with any standard issued by a standard-setting agency in conformance with this part.

Adaptability means the capability of certain building spaces and elements, such as kitchen counters, sinks and grab bars, to be altered or added to so as to accommodate the needs of persons with or without disabilities, or to accommodate the needs of persons with different types or degrees of disability.

Addition means an expansion, extension, or increase in the gross floor area of a building or facility.

Agency means a Federal department, agency or instrumentality, as defined in sections 551(1) and 701(b)(1) of title 5, United States Code, or an official authorized to represent an agency.

Alteration means any change in a building or facility or its permanent fixtures or equipment. It includes, but is not limited to, remodeling, renovation, rehabilitation, reconstruction, changes or rearrangement in structural parts, and extraordinary repairs. It does not include normal maintenance, reroofing, interior decoration, or changes to mechanical systems.

Architectural Barriers Act means the Architectural Barriers Act of 1968, Pub. L. 90–480, as amended, 42 U.S.C. 4151 *et seq*.

Assembly area means a room or space accommodating fifty or more individuals for religious, recreational, educational, political, social, or amusement purposes, or for the consumption of food and drink, and including all connected rooms or spaces with a common means of egress and ingress. Such areas as conference and meeting rooms accommodating fewer than fifty individuals are not considered assembly areas.

Automatic door means a door—

(1) Used for human passage and

(2) Equipped with a power-operated mechanism and controls that open and close the door upon receipt of a momentary actuating signal.

Building or *facility* means all or any portion of buildings, structures, equipment, roads, walks, parking lots, parks, sites, or other real property or interest in such property.

Circulation path means an exterior or interior way of passage from one place to another for pedestrians, including, but not limited to, walks, hallways, courtyards, stairways, and stair landings.

Clear means unobstructed.

Common use areas means those interior and exterior rooms, spaces or elements that are made available for the use of a restricted group of people (for example, residents of an apartment building, the occupants of an office building, or the guests of such residents or occupants).

Construction means any erection of a new building or of an addition to an existing building or facility.

Cross slope means the slope that is perpendicular to the direction of travel (see *running slope*).

Curb ramp means a short ramp cutting through a curb or built up to it.

Detectable means perceptible by one or more of the senses.

Detectable warning means a standardized surface texture applied to or built into walking surfaces or other elements to warn visually impaired people of hazards in the path of travel.

Dwelling unit means a single unit of residence that provides a kitchen or food preparation area, in addition to rooms and spaces for living, bathing, sleeping, and the like.

A single family home is a dwelling unit, and dwelling units are to be found in such housing types as townhouses and apartment buildings.

Egress or *means of egress* means a continuous and unobstructed way of exit

travel from any point in a building or facility to an exterior walk or out of a fire zone. It includes all intervening rooms, spaces, or elements.

Element means an architectural or mechanical component of a building, facility, space, or site, *e.g.*, telephone, curb ramp, door, drinking fountain, seating, water closet.

Entrance means any access point to a building or portion of a building or facility used for the purpose of entering. An entrance includes the approach walk, the vertical access leading to the entrance platform, the entrance platform itself, vestibules if provided, the entry door(s) or gate(s), and the hardware of the entry door(s) or gate(s). The principal entrance of a building or facility is the main door through which most people enter.

Essential features means those elements and spaces that make a building or facility usable by, or serve the needs of, its occupants or users. Essential features include but are not limited to entrances, toilet rooms, and accessible routes. Essential features do not include those spaces that house the major activities for which the building or facility is intended, such as classrooms and offices.

Exception means a special provision in this part or in a standard which indicates an acceptable alternative, under specified circumstances, to a requirement stated directly above the exception.

Extraordinary repair means the replacement or renewal of any element of an existing building or facility for purposes other than normal maintenance.

Full and fair cash value is calculated for the estimated date on which work will commence on a project and means—

(1) The assessed valuation of a building or facility as recorded in the assessor's office of the municipality and as equalized at one hundred percent (100%) valuation—

(NOTE: The one hundred percent (100%) equalized assessed value shall be based upon the state's most recent determination of the particular city's or town's assessment ratio.

Example: Town X has an assessment ratio of forty percent (40%), and the particular building in question is assessed at $200,000.00. To determine the equalized assessed value of this building, divide $200,000.00 by .40, and the equalized assessed value equals $500,000.00.);

(2) The replacement cost; or

(3) The fair market value.

Guidelines and requirements means this part.

Housing means a building, facility, or portion thereof, excluding inpatient health care facilities, that contains one or more dwelling units or sleeping accommodations. Housing may include, but is not limited to, one-family and two-family dwellings, multifamily dwellings, group homes, hotels, motels, dormitories, and mobile homes.

Marked crossing means a crosswalk or other identified path intended for pedestrian use in crossing a vehicular way.

Multifamily housing means a project containing five or more dwelling units.

Operable part means a part of equipment or an appliance used to insert or withdraw objects, to activate or deactivate equipment, or to adjust the equipment (*e.g.*, coin slot, push button, handle).

Physically handicapped person means an individual who has a physical impairment, including impaired sensory, manual, or speaking abilities, which results in a functional limitation in access to and use of a building or facility.

Power-assisted door means a door—

(1) Used for human passage; and

(2) With a mechanism that helps to open the door, or relieve the opening resistance of a door, upon the activation of a switch or a continued force applied to the door itself.

Public use means any interior and exterior rooms or spaces made available to the general public. Public use may be provided at a building or facility that is privately or publicly owned.

Ramp means a walking surface that has a running slope greater than 1:20.

Reconstruction means the act or process of reproducing by new construction the exact form and detail of a vanished building, structure, or object, or a part thereof, as it appeared at a specific period of time.

Restoration means the act or process of accurately recovering the form and details of a property and its setting as it appeared at a particular period of time by means of the removal of later

works or by replacement of missing earlier work.

Running slope means the slope that is parallel to the direction of travel (see *cross slope*).

Section 502 of the Rehabilitation Act or *section 502* means section 502 of the Rehabilitation Act of 1973, Pub. L. 93–112, 29 U.S.C. 792, as amended.

Service entrance means an entrance intended primarily for delivery or service.

Shall denotes a mandatory requirement.

Signage means the display of written, symbolic, tactile, or pictorial information.

Site means a parcel of land bounded by a property line or a designated portion of a public right-of-way.

Site improvements means landscaping, paving for pedestrian and vehicular ways, outdoor lighting, recreational facilities, and similar site additions.

Sleeping accommodations means rooms in which people sleep (for example, dormitory and hotel or motel guest rooms).

Space means a definable area, *e.g.*, toilet room, hall, assembly area, parking area, entrance, storage room, alcove, courtyard, or lobby.

Standard means any standard for accessibility issued under the Architectural Barriers Act.

Standard-setting agency means one of the four agencies required to issue standards under the Architectural Barriers Act, *i.e.*, the General Services Administration, the Department of Housing and Urban Development, the Department of Defense, and the United States Postal Service.

Structural impracticability means having little likelihood of being accomplished without removing or altering a load-bearing structural member and/or incurring an increased cost of 50 percent or more of the value of the element of the building or facility involved.

Tactile means perceptible through the sense of touch.

Temporary means elements are not permanent (*i.e.*, installed for less than six months) and are not required for safety reasons.

Walk means an exterior pathway or space with a prepared surface intended for pedestrian use and having a slope of 1:20 or less. It includes general pedestrian areas such as plazas and courts.

[47 FR 33864, Aug. 4, 1982, as amended at 54 FR 5444, Feb. 3, 1989]

§ 1190.4 Issuance of Architectural Barriers Act standards by standard-setting agencies.

(a) These guidelines and requirements are the minimum guidelines and requirements for standards issued under the Architectural Barriers Act by the Administrator of General Services, Secretary of Housing and Urban Development, Secretary of Defense, and Postmaster General.

(b) Standards which conform to or exceed the provisions of the guidelines shall be deemed in compliance with the guidelines and requirements.

(c) Each standard-setting agency is encouraged to issue standards which follow the format of these guidelines and requirements. However, standards which differ in format from these guidelines and requirements but are otherwise consistent with the guidelines and requirements shall be deemed in compliance with these guidelines and requirements.

§ 1190.5 Guidelines: Other uses.

These minimum guidelines and requirements and those standards published by the four standard-setting agencies under the Architectural Barriers Act of 1968, as amended, may be used by other governmental and nongovernmental entities, along with other sources, to develop their own standards.

§ 1190.6 Interpretation of guidelines.

(a) These guidelines and requirements shall be liberally construed to carry out the purposes and provisions of the Architectural Barriers Act and section 502 of the Rehabilitation Act.

(b) Words importing the singular number may extend and be applied to the plural and vice versa. However, unless otherwise specified in the guidelines and requirements, each element or space of a particular building or facility shall comply with the guidelines and requirements.

(c) Use of the imperative mood, *e.g.*, ''provide,'' means the provision is mandatory. This form is being used to avoid wordiness and monotony but means the same as if the word ''shall'' had been included.

(d) The provisions in the minimum guidelines and requirements are based upon adult dimensions and anthropometrics.

(e) Dimensions that are not marked ''minimum'' or ''maximum'' are absolute, unless otherwise indicated in the text or captions. All dimensions are subject to conventional building tolerances for field conditions.

§ 1190.7 Severability.

If any section, subsection, paragraph, sentence, clause, or phrase of these guidelines and requirements is declared invalid for any reason, the remaining portions of these guidelines and requirements that are severable from the invalid part shall remain in full force and effect. If a part of these guidelines and requirements is invalid in one or more of its applications, the part shall remain in effect in all valid applications that are severable from the invalid applications.

[47 FR 33864, Aug. 4, 1982. Redesignated at 54 FR 5444, Feb. 3, 1989]

Subpart B—Scope

§ 1190.30 Scope. [Reserved]

§ 1190.31 Accessible buildings and facilities: New construction.

Except as otherwise provided in this part, all new construction of buildings and facilities shall comply with the minimum requirements set forth below. The citations beginning with ''ANSI'' in the provisions which follow refer to the sections of the American National Standard, ANSI Al17.1–1986, ''Providing Accessibility and Usability for Physically Handicapped People'' by the American National Standards Institute, Inc. This incorporation by reference was approved by the Director of the Federal Register in accordance with 5 U.S.C. 552(a) and 1 CFR part 51. Copies may be obtained from the American National Standards Institute, Inc., 1430 Broadway, New York, NY 10018. Copies may be inspected at the office of the U.S. Architectural and Transportation Barriers Compliance Board, 1111 18th Street, NW., Suite 501, Washington, DC or at the Office of the Federal Register, 800 North Capitol Street, NW., suite 700, Washington,DC.

(a) Accessible route. At least one accessible route shall comply with ANSI A117.1–1986, section 4.3, Accessible Routes (Incorporated by reference, see this paragraph (a).)

(1) Required accessible route(s) shall connect an accessible building entrance with:

(i) Transportation facilities located within the property line of a given site, including passenger loading zones, public transportation facilities, taxi stands, and parking;

(ii) Public streets and sidewalks;

(iii) Other accessible buildings, facilities, elements, and spaces that are on the same site; and

(iv) All accessible spaces, rooms, and elements within the building or facility.

(2) Where fire code provisions require more than one means of egress from any space or room, then more than one accessible means of egress complying with ANSI A117.1–1986, section 4.3.10 shall be provided for handicapped people and shall be arranged so as to be readily accessible from all accessible rooms and spaces (Incorporated by reference, see § 1190.3l(a).)

(b) *Parking and passenger loading zones.*

(1) If any parking is provided, for employees or visitors, or both, each such parking area shall comply with ANSI A117.1–1986 section 4.6 Parking Spaces and Passenger Loading Zones (Incorporated by reference, see paragraph (a) of this section), and the following table:

Total parking in lot	Required minimum number of accessible spaces
1 to 25	1.
26 to 50	2.
51 to 75	3.
76 to 100	4.
101 to 150	5.
151 to 200	6.
201 to 300	7.
301 to 400	8.
401 to 500	9.
501 to 1,000	2 pct of total.
Over 1,000	20 plus 1 for each 100 over 1,000.

Passenger loading zones shall provide an access aisle at least 60 in (1525 mm) wide and 20 ft (60 mm) long adjacent and parallel to the vehicle pull-up space. If there are curbs between the access aisle and the vehicle pull-up space, then a curb ramp complying with ANSI A117.1–1986, section 4.7 shall be provided. A minimum vertical clearance of 114 in (3.45 m) shall be provided at accessible passenger loading zones and along vehicle access routes to such areas from site entrances.

(i) *Exception:* The total number of accessible parking spaces may be distributed among parking lots, if greater accessibility is achieved.

(ii) *Exception:* This paragraph does not apply to parking provided for official government vehicles owned or leased by the government and used exclusively for government purposes.

Parking spaces for side lift vans are accessible parking spaces and may be used to meet the requirements of this paragraph.

(2) If passenger loading zones are provided, at least one passenger loading zone shall comply with ANSI A117.1–1986 section 4.6 Parking Spaces and Passenger Loading Zones (Incorporated by reference, see paragraph (a) of this section).

(c) *Ramps and curb ramps.* If there is an abrupt level or grade change, if the slope is greater than 1:20, and if no other means of accessible vertical access is provided, a ramp or curb ramp shall be provided. If a ramp or curb ramp is provided, it shall comply with ANSI A117.1–1986, section 4.7 Curb Ramps or 4.8 Ramps, as appropriate (Incorporated by reference, see paragraph (a) of this section.).

(d) *Stairs.* Except as provided in paragraph (f)(1) of this section, stairs connecting levels that are not connected by an elevator shall comply with ANSI A117.1–1986, section 4.9, Stairs. (Incorporated by reference, see paragraph (a) of this section.)

(e) *Handrails.* Handrails shall be provided at each ramp and staircase as required in ANSI A117.1–1986, sections 4.8 Ramps and 4.9 Stairs, respectively. (Incorporated by reference, see paragraph (a) of this section.)

(f) *Elevators.* One passenger elevator complying with ANSI A117.1–1986, section 4.10, Elevators (incorporated by reference, see paragraph (a) of this section) shall serve each level in all multistory buildings and facilities. If more than one elevator is provided, each elevator shall comply with ANSI A117.1–1986, section 4.10, Elevators (incorporated by reference, see paragraph (a) of this section). All elevator control buttons shall be at least ¾ in (19mm) in their smallest dimension. They shall be raised or flush.

(1) *Exception.* Elevator pits, elevator penthouses, mechanical rooms, piping, or equipment catwalks are excepted from this requirement.

(2) *Exception.* Ramps or platform lifts complying with ANSI A117.1–1986, section 4.8 Ramps and ANSI A117.1–1986, section 4.11 Platform Lifts (incorporated by reference, see paragraph (a) of this section), respectively, may be used in lieu of an elevator.

(g) *Platform lifts.* If the slope is greater than 1:20, and if no other means of accessible vertical access is provided, a platform lift may be provided if there is an abrupt level or grade change. If a platform lift is provided, it shall comply with ANSI A117.1–1986, section 4.11 Platform Lifts (incorporation by reference, see paragraph (a) of this section), and should facilitate unassisted entry and exit from the lift.

(h) *Entrances.* At least one principal entrance at each grade floor level to a building or facility shall comply with ANSI A117.1–1986, section 4.14, Entrances (incorporated by reference, see paragraph (a) of this section). When a building or facility has entrances which normally serve any of the following functions: transportation facilities, passenger loading zones, accessible parking facilities, taxi stands, public streets and sidewalks, accessible interior vertical access, then at least one of the entrances serving each such function shall comply with ANSI A117.1–1986, section 4.14, Entrances (incorporated by reference, see paragraph (a) of this section). Because entrances also serve as exits, particularly in cases of emergency, the proximity of such accessible entrances and exits to all parts of the building is essential. It is preferable that all or most entrances and exits be accessible. One entrance may serve more than one function.

(i) *Doors.* (1) At each accessible entrance to a building or facility, at least one door shall comply with ANSI A117.1–1986, section 4.13, Doors (incorporated by reference, see paragraph (a) of this section).

(2) Within a building or facility, at least one door at each accessible entrance to the accessible space shall comply with ANSI A117.1–1986, section 4.13, Doors (incorporated by reference, see paragraph (a) of this section).

(3) Each door required by ANSI A117.1–1986, section 4.3.10, Egress (incorporated by reference, see paragraph (a) of this section), shall comply with ANSI A117.1–1986, section 4.13, Doors (incorporated by reference, see paragraph (a) of this section).

(4) Each door that is an element of an accessible route shall comply with ANSI A117.1–1986, section 4.13, Doors (incorporated by reference, see paragraph (a) of this section).

(j) *Windows.* If operable windows are provided, they shall comply with ANSI A117.1–1986, section 4.12 Windows. (Incorporated by reference, see paragraph (a) of this section.)''

(k) *Toilet and bathing facilities.* If toilet and bathing facilities are provided, then each public and common use toilet room shall comply with ANSI A117.1–1986, section 4.22, Toilet Rooms, Bathrooms, Bathing Facilities and Shower Rooms (incorporated by reference, see paragraph (a) of this section. Other toilet rooms shall be adaptable. If bathing facilities are provided, then each public and common use bathing facility shall comply with ANSI A117.1–1986, section 4.22. In each such facility where any of the fixtures and accessories specified in ANSI A117.1–1986, section 4.16, Water Closets; ANSI A117.1–1986, section 4.17, Toilet Stalls; ANSI A117.1–1986, section 4.18, Urinals; ANSI A117.1–1986, section 4.19, Lavatories, Sinks and Mirrors; ANSI A117.1–1986, section 4.20, Bathtubs; and ANSI A117.1–1986, section 4.21, Shower Stalls, are provided, at least one accessible fixture and accessory of each type provided shall comply with the provisions in the subsection applicable to that fixture or accessory. The size and arrangement of toilet stalls shall comply with ANSI Fig. 30(a). Toilet stalls with a minimum depth of 56 in (1420 mm) (see ANSI Fig. 30(a)) shall have wall-mounted closets. If the depth of toilet stalls is increased at least 3 in (75 mm), then a floor mounted water closet may be used. Arrangements shown for toilet stalls may be reversed to allow either a left-hand or right-hand approach. Installation of a fixed shower head may be permitted in lieu of an adjustable height or hand-held shower head in unmonitored facilities where vandalism is a concern. Curbs in shower stalls that are 36 in by 36 in (915 mm by 915 mm) shall have a maximum height of ½ in (13 mm). Bathrooms in dwelling units required to be accessible shall comply with ANSI A117.1–1986, section 4.32.4, Bathrooms. For special use situations, refer to Subpart E, Special Building or Facility Types or Elements.

(l) *Drinking fountains and water coolers.* If drinking fountains or water coolers are provided, approximately 50% of those provided on each floor shall comply with ANSI A117.1–1986, section 4.15, Drinking Fountains and Water Coolers, (incorporated by reference, see paragraph (a) of this section), and shall be dispersed throughout the floor. If only one drinking fountain or water cooler is provided on any floor, it shall comply with ANSI A117.1–1986, section 4.15. It is preferred that if only one drinking fountain or water cooler is provided on any floor, then it should have two levels with the lower level complying with ANSI A117.1–1986, section 4.15.

(m) *Controls and operating mechanisms.* If controls and operating mechanisms are provided in accessible spaces, along accessible routes or as parts of accessible elements, each shall comply with ANSI A117.1–1986, section 4.25, Controls and Operating Mechanisms. (Incorporated by reference, see paragraph (a) of this section.)

(n) *Alarms.* If alarm systems are provided, each shall comply with ANSI A117.1–1986, section 4.26, Alarms (incorporated by reference, see paragraph (a) of this section). In facilities with sleeping accommodations, the sleeping accommodations required to be accessible shall have an alarm system complying with ANSI A117.1–1986, section 4.26.4, Auxiliary Alarms. Emergency

warning systems in health care facilities may be modified to suit standard health care alarm design practice.

(o) *Detectable warnings.* Detectable warnings complying with ANSI A117.1–1986, section 4.27.3, Tactile Warnings on Doors to Hazardous Areas (incorporated by reference, see paragraph (a) of this section), shall be provided on the hardware of all doors leading to hazardous areas. Such warnings shall not be used at emergency exit doors. Detectable warnings are not required at locations other than doors to hazardous areas by this part. If detectable warnings are provided, the specifications at ANSI A117.1–1986, section 4.27 may be used as guidance.

NOTE: The ATBCB has funded research in the area of detectable tactile surface treatments. The research findings were inconclusive and, therefore, recommended no mandatory requirements at this time. Further information is being developed through additional research on detectable materials and fact-finding on current applications, particularly on transit platforms. Technical assistance materials including information about additional detectable cues (sound and resiliency) not discussed in ANSI are available from the ATBCB, 1111 18th Street, NW, Suite 501, Washington, DC 20036, (202) 653–7834 (voice or TDD).

(p) *Signage.* Signage shall comply with ANSI A117.1–1986, section 4.28, Signage (incorporated by reference, see paragraph (a) of this section). Permanent signage that identifies rooms and spaces shall also comply with ANSI A117.1–1986, section 4.28.4. Exception: The provisions of ANSI A117.1–1986, section 4.28.4 are not mandatory for temporary information on room and space signage, such as current occupant's name, provided the permanent room or space identification complies with ANSI A117.1–1986, section 4.28.4.

(q) *Telephones.* (1) If public telephones are provided, then accessible public telephones shall comply with ANSI A117.1–1986, section 4.29, Telephones (incorporated by reference, see paragraph (a) of this section), and the following table:

Number of public telephones provided on each floor	Number of telephones required to be accessible [1]
One or more single unit installations.	One per floor.
One bank [2]	One per floor.
Two or more banks [2]	One per bank. Accessible unit may be installed as a single unit in proximity (either visible or with signage) to bank. At least one public telephone per floor shall meet the requirements for a forward reach telephone.[3]

[1] Additional public telephones may be installed at any height; however, the installation of accessible telephones is strongly recommended. Unless otherwise specified, accessible telephones may be either forward reach or side reach telephones.

[2] A bank consists of two or more adjacent public telephones usually installed as a unit.

[3] Exception for exterior installations only: If dial-tone-first service is *not* available, then a side reach telephone may be installed instead of the required forward reach telephone (*i.e.,* one telephone in proximity to each bank shall meet the requirements of ANSI A117.1–1986, section 4.29, Telephones (incorporated by reference, see paragraph (a) of this section)).

(2) At least one of the public telephones complying with ANSI A117.1–1986, section 4.29, Telephones (incorporated by reference, see paragraph (a) of this section), shall be equipped with a volume control. The installation of additional volume controls is encouraged and these may be installed on any public telephone provided.

(3) Signage. [Reserved]

(r) *Seating, tables, and work surfaces.* If fixed seating, tables, and work surfaces are provided, at least 5 percent but always at least one of each element shall comply with ANSI A117.1–1986, section 4.30, Seating, Tables and Work Surfaces. (Incorporated by reference, see paragraph (a) of this section.)

(s) *Assembly areas, conference, or meeting rooms.* (1) If assembly areas are provided, accessible viewing positions shall comply with ANSI A117.1–1986, section 4.31, Auditorium and Assembly Areas (incorporated by reference, see paragraph (a) of this section), and the following table:

Capacity of assembly area	Number of viewing positions
50 to 75	3.
76 to 100	4.
101 to 150	5.
151 to 200	6.
201 to 300	7.
301 to 400	8.
401 to 500	9.
501 to 1,000	2 pct of total.
Over 1,000	20 plus 1 for each 100 over 1,000.

Accessible viewing positions may be clustered in bleachers, balconies, and other areas that have sight lines requiring slopes greater than 5 percent or

to permit equivalent accessible viewing positions to be located on levels having accessible egress.

(2) Assembly areas with audio-amplification systems shall have a listening system complying with ANSI A117.1–1986, section 4.31, to assist a reasonable number of people but no fewer than two, with severe hearing loss. For assembly areas without amplification systems and for spaces used primarily as meeting and conference rooms, a permanently installed or portable listening system shall be provided. This requirement may be satisfied by use of a portable system that requires little or no installation. If portable systems are used for conference and meeting rooms, the system may serve more than one room.

(3) If performing areas are provided, accessible routes shall comply with ANSI A117.1–1986, section 4.3, Accessible Routes, to performing areas, including but not limited to stages, arena floors, dressing rooms, locker rooms, and other rooms and spaces required for use of the assembly area. (ANSI 4.33.5)

(i) *Exception.* In alteration work where it is structurally impracticable to alter all performing areas to be on an accessible route, at least one of each type shall be made accessible. (ANSI 4.33.6* and 4.33.7*)

(ii) [Reserved]

(t) *Storage.* If storage facilities such as cabinets, shelves, closets and drawers are provided in accessible spaces for occupant use, at least one storage facility of each type provided shall comply with ANSI A117.1–1986, section 4.23, Storage. (Incorporated by reference, see paragraph (a) of this section.) Additional storage may be provided outside of the dimensions provided in ANSI A117.1–1986, section 4.23, Storage. (Incorporated by reference, see paragraph (a) of this section.)

(u) *Housing.* Accessible housing shall:

(1) Comply with the requirements of this section as it applies to public use and common use areas and areas where handicapped persons may be employed, except as follows:

(i) Elevators: Where provided, elevators shall comply with ANSI A117.1–1986, section 4.10 (incorporated by reference, see paragraph (a) of this section). All elevator control buttons shall be at least ¾ in (19 mm) in their smallest dimension. They shall be raised or flush. Elevators or other accessible means of vertical movement are not required in residential facilities when:

(A) No accessible dwelling units are located above or below the accessible grade level; and

(B) At least one of each type of common area and amenity provided for use of residents and visitors is available at the accessible grade level.

(ii) Entrances: Entrances complying with ANSI 4.14 shall be provided as necessary to achieve access to and egress from buildings and facilities. EXCEPTION: In projects consisting of one-to-four family dwellings where accessible entrances would be extraordinarily costly due to site conditions or local code restrictions, accessible entrances are required only to those buildings containing accessible dwelling units.

(iii) Common Areas: At least one of each type of common area and amenity in each project shall be accessible and shall be located on an accessible route to any accessible dwelling unit.

(2) Provide dwelling units or sleeping accommodations complying with ANSI 4.32, Dwelling Units, in accordance with the following table:

Facilities	Application
Hotels, motels, boarding houses.	5 percent of the total units, or at least one, whichever is greater.
Multifamily housing (including apartment houses) Federally assisted.	5 percent of the total, or at least one unit, whichever is greater in multifamily housing projects.
Federally owned	5 percent of the total, or at least one unit, whichever is greater in multifamily housing projects.
Dormitories	5 percent of the total, or at least one unit whichever is greater.
One and two family dwelling Federally assisted, rental.	5 percent of the total, or at least one unit, whichever is greater, in multifamily housing projects.
Federally assisted homeownership.	To be determined by home buyer.
Federally owned	5 percent of the total, or at least one unit, whichever is greater in multifamily housing projects.

(v) *Health care facilities.* Accessible health care facilities shall:

(1) Comply with the requirements of this section, as it applies to public use and common use areas and areas where handicapped persons may be employed; and

(2) Provide patient rooms and patient toilet rooms complying with Part 6 of UFAS in accordance with the following table:

Facilities	Application
Long term care facilities (including skilled nursing facilities, intermediate care facilities, bed and care, and nursing homes).	At least 50 percent of patient toilets and bedrooms.
Outpatient facilities	All patient toilets and bedrooms.
Hospital:	
General purpose hospital	At least 10 percent of patient toilets and bedrooms.
Special purpose hospital (hospitals that treat conditions that affect mobility).	All patient toilets and bedrooms.

[47 FR 33864, Aug. 4, 1982. Redesignated and amended at 54 FR 5444, Feb. 3, 1989; 54 FR 34977, Aug. 23, 1989]

§ 1190.32 Accessible buildings and facilities: Additions.

Each addition to an existing building or facility shall comply with § 1190.31, New construction, except as follows:

(a) *Entrances.* If a new addition to a building or facility does not have an entrance, then at least one entrance in the existing building or facility shall comply with ANSI A117.1–1986, section 4.14, Entrances. (The citations beginning with ''ANSI'' in this section refer to the sections of the American National Standard, ANSI A117.1–1986, ''Providing Accessibility and Usability for Physically Handicapped People'' by the American National Standards Institute, Inc. which has been approved for incorporation by reference as set forth in § 1190.31(a).

(b) *Accessible route.* If the only accessible entrance to the addition is located in the existing building or facility, then at least one accessible route shall comply with ANSI A117.1–1986, section 4.3, Accessible Route (incorporated by reference, see § 1190.31(a)), and shall provide access through the existing building or facility to all rooms, elements, and spaces in the new addition.

(c) *Toilet and bathing facilities.* If there are no toilet rooms and bathing facilities in the addition and these facilities are provided in the existing building, then at least one toilet and bathing facility in the existing building shall comply with ANSI A117.1–1986, section 4.22, Toilet Rooms, Bathrooms, Bathing Facilities and Shower Rooms. (Incorporated by reference, see § 1190.31(a).).

(d) *Elements, spaces, and common areas.* If elements, spaces, or common areas are located in the existing building and they are not provided in the addition, consideration should be given to making those elements, spaces, and common areas accessible in the existing building.

(e) *Exception.* Mechanical rooms, storage areas, and other such minor additions which normally are not frequented by the public or employees of the facility are excepted from paragraphs (a), (b), (c) and (d) of this section.

[47 FR 33864, Aug. 4, 1982. Redesignated and amended at 54 FR 5444, 5446, Feb. 3, 1989]

§ 1190.33 Accessible buildings and facilities: Alterations.

(a) *General.* Alterations to existing buildings or facilities shall comply with the following:

(1) If existing elements, spaces, essential features, or common areas are altered, then each such altered element, space, feature, or area shall comply with the applicable provisions of § 1190.31, Accessible buildings and facilities: New construction, except as noted in paragraph (a)(2) of this section.

(2) Exceptions to the requirements for (a)(1) of this section for existing buildings or facilities are:

(i) *Stairs.* Full extension of stair handrails shall not be required in alterations where such extensions would be hazardous or impossible due to plan configuration.

(ii) *Elevators.* (A) If a safety door edge is provided in existing automatic elevators, then the automatic door reopening devices may be omitted (see ANSI A117.1–1986 section 4.10.6). (The citations beginning with ''ANSI'' in this section refer to the sections of the American National Standard, ANSI A117.1–1986, ''Providing Accessibility and Usability for Physically Handicapped People'' by the American National Standards Institute, Inc. which has been approved for incorporation by reference as set forth in § 1190.31(a).

(B) Where existing shaft or structural elements prohibit strict compliance with ANSI A117.1–1986, section 4.10.9 (incorporated by reference, see § 1190.31(a)), then the minimum floor area dimensions may be reduced by the minimum amount necessary, but in no case shall they be less than 48 in by 48 in (1220 mm by 1220 mm).

(iii) *Doors.* (A) Where existing elements prohibit strict compliance with the clearance requirements of ANSI 4.13.5, a projection of 5/8 in (16 mm) maximum will be permitted for the latch side door stop. (The citations beginning with ''ANSI'' in this section refer to the sections of the American National Standard, ANSl A117.1–1986, ''Providing Accessibility and Usability for Physically Handicapped People'' by the American National Standards Institute, Inc. which has been approved for incorporation by reference as set forth in § 1190.31(a).)

(B) If existing thresholds measure ¾ in (19 mm) high or less, and are beveled or modified to provide a beveled edge on each side, then they may be retained.

(iv) *Toilet rooms.* Where alterations to existing facilities make strict compliance with ANSI A117.1–1986, sections 4.22 and 4.23 (incorporated by reference, see § 1190.31(a)) structurally impracticable, the addition of one ''unisex'' toilet per floor containing one water closet complying with ANSI A117.1–1986, section 4.16 and one lavatory complying with ANSI A117.1–1986, section 4.19, located adjacent to existing toilet facilities, will be acceptable in lieu of making existing toilet facilities for each sex accessible.

(v) *Assembly areas.* (A) In alterations where it is structurally impracticable to disperse seating throughout the assembly area, seating may be located in collected areas as structurally feasible. Seating shall adjoin an accessible route that also serves as a means of emergency egress.

(B) In alterations where it is structurally impracticable to alter all performing areas to be on an accessible route, then at least one of each type shall be made accessible.

(3) If power-driven vertical access equipment (*e.g.,* escalator) is planned or installed where none existed previously, or if new stairs (other than stairs installed to meet emergency exit requirements) requiring major structural changes are planned or installed where none existed previously, then a means of accessible vertical access shall be provided that complies with ANSI A117.1–1986, section 4.8, Ramps; ANSI A117.1–1986, section 4.10, Elevators; or ANSI A117.1–1986, section 4.11, Platform Lifts (incorporated by reference, see § 1190.31(a)) except to the extent where it is structurally impracticable in transit facilities. All elevator control buttons shall be at least ¾ in (19 mm) in their smallest dimension. They shall be raised or flush.

(4) If alterations of single elements, when considered together, amount to an alteration of a space of a building or facility, the entire space shall be made accessible.

(b) Where a building or facility is vacated and it is totally altered, then it shall comply with § 1190.31 Accessible buildings and facilities: New construction, except to the extent where it is structurally impracticable.

(c) Where substantial alteration occurs to a building or facility, then each element or space that is altered or added shall comply with the applicable provisions of § 1190.31, Accessible buildings and facilities: New construction, except to the extent where it is structurally impracticable and the altered building or facility shall contain:

(1) At least one accessible route complying with ANSI A1l7.1–1986, section 4.3, Accessible Routes (incorporated by reference, see § 1190.31(a)), and paragraph (a) of this section;

(2) At least one accessible entrance complying with ANSI A117.1–1986, section 4.14, Entrances (incorporated by reference, see § 1190.31(a).). If additional accessible entrances are altered, then they shall comply with paragraph (a)(1) of this section; and

(3) The following toilet facilities, whichever number is greater:

(i) At least one toilet facility for each sex in the altered building complying with ANSI A117.1–1986, section 4.22, Toilet Rooms, Bathrooms, Bathing Facilities, and Shower Rooms (incorporated by reference, see § 1190.31(a));

(ii) At least one toilet facility for each sex on each substantially altered floor, where such facilities are provided, complying with ANSI A117.1–1986, section 4.22, Toilet Rooms, Bathrooms, Bathing Facilities, and Shower Rooms (incorporated by reference, see § 1190.31(a));

In making the determination as to what constitutes ''substantial alteration,'' the agency issuing standards for the facility shall consider the total cost of all alterations (including but not limited to electrical, mechanical, plumbing, and structural changes) for a building or facility within any twelve (12) month period. For guidance in implementing this provision, an alteration to any building or facility is to be considered substantial if the total cost for this twelve month period amounts to 50% or more of the full and fair cash value of the building as defined at § 1190.3.

(4) *Exception*. If the cost of the elements and spaces required by paragraphs (c) (1), (2), and (3) of this section, exceeds 15% of the total cost of all other alterations, then a schedule may be established by the standard-setting and/or funding agency to provide the required improvements within a 5 year period.

(5) *Exception*. If the alteration is limited solely to the electrical, mechanical, or plumbing system and does not involve the alteration of any elements and spaces required to be accessible under part 1190, then paragraph (c) of this section, does not apply.

(6) *Exception*. Consideration shall be given to providing accessible elements and spaces in each altered building or facility complying with:

(i) ANSI A117.1–1986, sections 4.6, Parking Spaces and Passenger Loading Zones, as modified by § 1190.31(s)(1);

(ii) ANSI A117.1–1986, section 4.15, Drinking Fountains and Water Coolers;

(iii) ANSI A117.1–1986, section 4.23, Storage;

(iv) ANSI A117.1–1986, section 4.26, Alarms;

(v) ANSI A117.1–1986, section 4.29, Telephones;

(vi) ANSI A117.1–1986, section 4.30, Seating, Tables and Work Surfaces;

(vii) ANSI 4.31, Auditorium and Assembly Areas, as modified by § 1190.31(s)(1). (Incorporated by reference, see § 1190.31(a).)

(7) *Exception:* Mechanical rooms and other spaces which normally are not frequented by the public or employees of the facility or which by nature of their use are not required by the Architectural Barriers Act to be accessible are excepted from paragraphs (c) (1), (2), and (3) of this section.

[47 FR 33864, Aug. 4, 1982. Redesignated and amended at 54 FR 5444, 5446, Feb. 3, 1989]

§ 1190.34 Accessible buildings and facilities: Leased.

(a) Buildings or facilities or portions thereof leased by the Federal Government shall comply with § 1190.31, New construction, or shall incorporate the features listed in § 1190.33(c), Alterations. Where both types of buildings are available for leasing, reasonable preference must be given to buildings or facilities complying with § 1190.31, New construction.

(b) If space complying with paragraph (a) of this section is not available, space may be leased only if the space meets, or is altered to meet, the following conditions:

(1) At least one accessible route is provided from an accessible entrance complying with § 1190.120, Entrances, to those areas in which the principal activities for which the building or facility was leased are conducted. Separate accessible routes may be provided to areas serving different groups of users (e.g., the public, employees).

(2) The accessible route shall comply with the requirements of § 1190.50, Walks, floors, and accessible routes, and provide access to whatever accessible facilities are either required or provided, such as accessible toilets.

(i) Toilet facilities, to the extent required for the ready intended use of the building or facility, shall be provided as follows—

(A) Where more than one toilet for each sex is provided in a building or facility, at least one toilet facility which complies with § 1190.150, Toilet and bathing facilities, shall be provided for each sex on each floor having toilets; or

(B) In a building or facility providing only one toilet for each sex, either one unisex toilet or one toilet for each sex

complying with §1190.150 shall be provided; or

(C) In a building or facility where only one toilet is provided, one unisex toilet complying with §1190.150 shall be provided.

(ii) Parking facilities, if a parking area is included within the lease, shall be provided complying with §1190.60, Parking and passenger loading zones, to the extent feasible.

(3) Where an agency determines that an area does not require the provision of toilets or parking facilities for the users or occupants of that area, nothing in this section shall be construed to require the provision of any such facilities.

(4) Consideration shall be given to providing accessible elements and spaces in each altered building or facility complying with:

(i) Section 1190.160 Drinking fountains and water coolers;

(ii) Section 1190.180 Alarms;

(iii) Section 1190.210 Telephones;

(iv) Section 1190.220 Seating, tables, and work surfaces;

(v) Section 1190.230 Assembly areas; and

(vi) Section 1190.240 Storage.

(c) If space leased in accordance with the requirements of paragraph (a) or (b) of this section is subsequently altered, then the alterations shall comply with the requirements of §1190.33, Alterations.

(d) If space leased in accordance with the requirements of paragraph (a) or (b) of this section is increased by construction of an addition, the addition shall comply with §1190.32, Additions, to the extent it is leased by the Federal Government.

(e) If leased space at the time of leasing meets past or present state or local codes or the recommended standards of the American National Standards Institute (ANSI) A117.1 for accessibility to physically handicapped people, and provides the features required by this section, the space may be used as is or altered to comply with the technical requirements of paragraph (a) or (b) of this section.

(f) Once leased space in an existing building is accessible or is made accessible hereunder, no new accessibility alterations shall be required under this subpart except where alterations or additions are made to the building which are covered by paragraphs (c) and (d) of this section.

(g) *Exceptions.* (1) If no space complying with paragraph (a) or (b) of this section is available for leasing, space as available may be leased without alterations:

(i) If the lease is necessary for officials servicing natural or human-made disasters on an emergency basis;

(ii) If the space is used on an intermittent basis; or

(iii) If the occupancy of the space is for no more than twelve months. If delays occur during the twelve months, the short-term lease may be extended for no more than an additional 12 months.

(2) Mechanical rooms and other spaces which normally are not frequented by the public or employees with handicaps of the occupant agency or which by nature of their use are not required to be accessible are excepted from this section.

[53 FR 35510, Sept. 14, 1988. Redesignated at 54 FR 5444, Feb. 3, 1989]

Subpart C—Technical Provisions

§1190.40 Technical specifications.

Features, elements and spaces required to be accessible by §1190.31, §1190.32, or §1190.33 shall meet the technical requirements specified in the provisions of sections 4.2 through 4.32 of ANSI A117.1–1986, ''American National Standard for Buildings and Facilities—Providing Accessibility and Usability for Physically Handicapped People,'' which is incorporated herein by reference, except as noted herein. This incorporation by reference was approved by the Director of the Federal Register in accordance with 5 U.S.C. 552(a) and 1 CFR part 51. Copies may be obtained from the American National Standards Institute, Inc., 1430 Broadway, New York, NY 10018. Copies may be inspected at the office of the U.S. Architectural and Transportation Barriers Compliance Board, 1111 18th Street, NW., Suite 501, Washington, DC or at the Office of the Federal Register, 800

North Capitol Street, NW., suite 700, Washington, DC.

[54 FR 5447, Feb. 3, 1989]

§ 1190.50 Exceptions.

(a) In addition to ANSI A117.1–1986, section 4.10 (incorporated by reference, see § 1190.31(a)), Elevators, the following requirement is added: Hall call buttons provided under ANSI A117.1–1986, section 4.10.3 shall be raised or flush.

(b) Under ANSI A117.1–1986, section 4.7 (incorporated by reference, see § 1190.31(a)), Curb Ramps, and ANSI 117.1–1986, section 4.7.7, Warning Textures, and ANSI 117.1–1986, section 4.7.12, Uncurbed Intersections, shall not apply.

(c) In addition to ANSI A117.1–1986, section 4.28, Signage (incorporated by reference, see § 1190.31(a)), there is added the requirement that interior tactile signage identifying rooms and spaces be located alongside the door on the latch side and be mounted at a height between 54 in and 66 in (1370 mm and 1675 mm) above the finished floor.

[54 FR 5447, Feb. 3, 1989]

Subpart D—Special Building or Facility Types or Elements

§ 1190.60 Special building or facility types.

The requirements specified in the Uniform Federal Accessibility Standards (UFAS) in sections 5, Restaurants and Cafeterias; 6, Health Care; 7, Mercantile; 8, Libraries; and 9, Postal Facilities, are deemed to satisfy minimum guidelines and requirements of the ATBCB for accessibility standards for those building and facility types.

[54 FR 5448, Feb. 3, 1989]

PART 1191—AMERICANS WITH DISABILITIES ACT (ADA) ACCESSIBILITY GUIDELINES FOR BUILDINGS AND FACILITIES

1191.1 Accessibility guidelines.
1191.2 Temporary suspension of certain detectable warning requirements.
APPENDIX A TO PART 1191—AMERICANS WITH DISABILITIES ACT (ADA) ACCESSIBILITY GUIDELINES FOR BUILDINGS AND FACILITIES

AUTHORITY: 42 U.S.C. 12204.

SOURCE: 56 FR 35453, July 26, 1991, unless otherwise noted.

§ 1191.1 Accessibility guidelines.

The accessibility guidelines for buildings and facilities for purposes of the Americans with Disabilities Act are found in the appendix to this part. The guidelines are issued to assist the Department of Justice and Department of Transportation to establish accessibility standards to implement the legislation.

[56 FR 45518, Sept. 6, 1991]

§ 1191.2 Temporary suspension of certain detectable warning requirements.

The detectable warning requirements contained in §§ 4.7.7, 4.29.5, and 4.29.6 of Appendix A to this part are suspended temporarily until July 26, 1998.

[61 FR 39324, July 29, 1996]

Americans with Disabilities Act (ADA)

Accessibility Guidelines for Buildings and Facilities

U.S. Architectural & Transportation Barriers Compliance Board
1331 F Street, N.W., Suite 1000
Washington, D.C. 20004-1111
(202) 272-5434 v/TTY
(202) 272-5449 TTY
(202) 272-5447 FAX

ADA ACCESSIBILITY GUIDELINES FOR BUILDINGS AND FACILITIES TABLE OF CONTENTS

1. PURPOSE **1**

2. GENERAL **1**

2.1 Provisions for Adults 1
2.2 Equivalent Facilitation 1

3. MISCELLANEOUS INSTRUCTIONS AND DEFINITIONS **1**

3.1 Graphic Conventions 1
3.2 Dimensional Tolerances 2
3.3 Notes 2
3.4 General Terminology 2
3.5 Definitions 2

4. ACCESSIBLE ELEMENTS AND SPACES: SCOPE AND TECHNICAL REQUIREMENTS **5**

4.1 Minimum Requirements 5

4.1.1 Application 5
4.1.2 Accessible Sites and Exterior Facilities: New Construction 6
4.1.3 Accessible Buildings: New Construction 7
4.1.4 (Reserved) 11
4.1.5 Accessible Buildings: Additions 11
4.1.6 Accessible Buildings: Alterations 11
4.1.7 Accessible Buildings: Historic Preservation 14

4.2 Space Allowance and Reach Ranges 14A
4.3 Accessible Route 15
4.4 Protruding Objects 21
4.5 Ground and Floor Surfaces 22
4.6 Parking and Passenger Loading Zones 24
4.7 Curb Ramps 26
4.8 Ramps 27
4.9 Stairs 30
4.10 Elevators 30
4.11 Platform Lifts (Wheelchair Lifts) 36
4.12 Windows 36
4.13 Doors 36

4.14 Entrances 40
4.15 Drinking Fountains and Water Coolers 40
4.16 Water Closets 40
4.17 Toilet Stalls 41
4.18 Urinals 44
4.19 Lavatories and Mirrors 44
4.20 Bathtubs 45
4.21 Shower Stalls 45
4.22 Toilet Rooms 45
4.23 Bathrooms, Bathing Facilities, and Shower Rooms 48
4.24 Sinks 49
4.25 Storage 49
4.26 Handrails, Grab Bars, and Tub and Shower Seats 50
4.27 Controls and Operating Mechanisms 51
4.28 Alarms 52
4.29 Detectable Warnings 53
4.30 Signage 53
4.31 Telephones 54
4.32 Fixed or Built-in Seating and Tables 56
4.33 Assembly Areas 56
4.34 Automated Teller Machines 58
4.35 Dressing and Fitting Rooms 58

5. RESTAURANTS AND CAFETERIAS 59

6. MEDICAL CARE FACILITIES 60

7. BUSINESS, MERCANTILE AND CIVIC 61

8. LIBRARIES 62

9. ACCESSIBLE TRANSIENT LODGING 63

10. TRANSPORTATION FACILITIES 67

11. JUDICIAL, REGULATORY AND LEGISLATIVE FACILITIES 72

12. DETENTION AND CORRECTIONAL FACILITIES 75

13. ACCESSIBLE RESIDENTIAL HOUSING 78

14. PUBLIC RIGHTS-OF-WAY 83

APPENDIX A1

1. PURPOSE.

This document sets guidelines for accessibility to buildings and facilities by individuals with disabilities under the Americans with Disabilities Act (ADA) of 1990. These guidelines are to be applied during the design, construction, and alteration of buildings and facilities covered by titles II and III of the ADA to the extent required by regulations issued by Federal agencies, including the Department of Justice and the Department of Transportation, under the ADA.

The technical specifications 4.2 through 4.35, of these guidelines are the same as those of the American National Standard Institute's document A117.1-1980, except as noted in this text by italics. However, sections 4.1.1 through 4.1.7 and the special application sections are different from ANSI A117.1-1980 in their entirety and are printed in standard type.

The illustrations and text of ANSI A117.1-1980 are reproduced with permission from the American National Standards Institute. Copies of the standard may be purchased from the American National Standards Institute at 1430 Broadway, New York, New York 10018.

Paragraphs marked with an asterisk have related, nonmandatory material in the Appendix. In the Appendix, the corresponding paragraph numbers are preceded by an A.

2. GENERAL.

2.1 Provisions for Adults. *The specifications in these guidelines are based upon adult dimensions and anthropometrics.*

2.2* Equivalent Facilitation. *Departures from particular technical and scoping requirements of this guideline by the use of other designs and technologies are permitted where the alternative designs and technologies used will provide substantially equivalent or greater access to and usability of the facility.*

3. MISCELLANEOUS INSTRUCTIONS AND DEFINITIONS.

3.1 Graphic Conventions. Graphic conventions are shown in Table 1. Dimensions that are not marked minimum or maximum are absolute, unless otherwise indicated in the text or captions.

TABLE 1
Graphic Conventions

Convention	Description
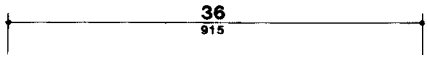	Typical dimension line showing U.S. customary units (in inches) above the line and SI units (in millimeters) below
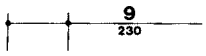	Dimensions for short distances indicated on extended line
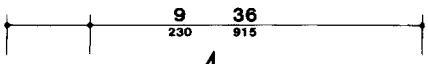	Dimension line showing alternate dimensions required
	Direction of approach
max	Maximum
min	Minimum
	Boundary of clear floor area
	Centerline

1

3.2 Dimensional Tolerances

3.2 Dimensional Tolerances. All dimensions are subject to conventional building industry tolerances for field conditions.

3.3 Notes. The text of these guidelines does not contain notes or footnotes. Additional information, explanations, and advisory materials are located in the Appendix.

3.4 General Terminology.

comply with. Meet one or more specifications of *these guidelines.*

if, if ... then. Denotes a specification that applies only when the conditions described are present.

may. Denotes an option or alternative.

shall. Denotes a mandatory specification or requirement.

should. Denotes an advisory specification or recommendation.

3.5 Definitions.

Access Aisle. An accessible pedestrian space between elements, such as parking spaces, seating, and desks, that provides clearances appropriate for use of the elements.

Accessible. Describes a site, building, facility, or portion thereof that complies with *these guidelines.*

Accessible Element. An *element* specified by *these guidelines* (for example, telephone, controls, and the like).

Accessible Route. A continuous unobstructed path connecting all accessible elements and spaces of a building or facility. Interior accessible routes may include corridors, floors, ramps, elevators, lifts, and clear floor space at fixtures. Exterior accessible routes may include parking access aisles, curb ramps, *crosswalks at vehicular ways,* walks, ramps, and lifts.

Accessible Space. *Space that complies with these guidelines.*

Adaptability. The ability of certain building spaces and elements, such as kitchen counters, sinks, and grab bars, to be added or altered so as to accommodate the needs of *individuals with or without disabilities* or to accommodate the needs of persons with different types or degrees of disability.

Addition. *An expansion, extension, or increase in the gross floor area of a building or facility.*

Administrative Authority. A governmental agency that adopts or enforces regulations and *guidelines* for the design, construction, or *alteration* of buildings and facilities.

Alteration. *An alteration is a change to a building or facility, including pedestrian facilities in the public right-of-way, that affects or could affect the usability of the building or facility or part thereof. Alterations include, but are not limited to, remodeling, renovation, rehabilitation, reconstruction, historic restoration, resurfacing, changes or rearrangement of the structural parts or elements, and changes or rearrangement in the plan configuration of walls and full-height partitions or pedestrian elements or surfaces in a developed right-of-way. Normal maintenance, reroofing, painting or wallpapering, or changes to mechanical and electrical systems are not alterations unless they affect the usability of the building or facility.*

Area of Rescue Assistance. *An area, which has direct access to an exit, where people who are unable to use stairs may remain temporarily in safety to await further instructions or assistance during emergency evacuation.*

Assembly Area. A room or space accommodating a *group* of individuals for recreational, educational, political, social, or amusement purposes, or for the consumption of food and drink.

Automatic Door. A door equipped with a power-operated mechanism and controls that open and close the door automatically upon receipt of a momentary actuating signal. The switch that begins the automatic cycle may be a photoelectric device, floor mat, or manual switch (see power-assisted door).

Building. Any structure used and intended for supporting or sheltering any use or occupancy.

3.5 Definitions

Circulation Path. An exterior or interior way of passage from one place to another for pedestrians, including, but not limited to, walks, hallways, courtyards, stairways, and stair landings.

Clear. Unobstructed.

Clear Floor Space. *The minimum unobstructed floor or ground space required to accommodate a single, stationary wheelchair and occupant.*

Closed Circuit Telephone. *A telephone with dedicated line(s) such as a house phone, courtesy phone or phone that must be used to gain entrance to a facility.*

Common Use. Refers to those interior and exterior rooms, spaces, or elements that are made available for the use of a restricted group of people (for example, *occupants of a homeless* shelter, the occupants of an office building, or the guests of such occupants).

Continuous Passage. See 14.1.1 (Definitions).

Cross Slope. The slope that is perpendicular to the direction of travel (see running slope).

Curb Ramp. A short ramp cutting through a curb or built up to it. See also 14.1.1 (Public Sidewalk Curb Ramps).

Detectable Warning. *A standardized surface feature built in or applied to walking surfaces or other elements to warn visually impaired people of hazards on a circulation path.*

Dwelling Unit. See 13.1 (General).

Egress, Means of. *A continuous and unobstructed way of exit travel from any point in a building or facility to a public way. A means of egress comprises vertical and horizontal travel and may include intervening room spaces, doorways, hallways, corridors, passageways, balconies, ramps, stairs, enclosures, lobbies, horizontal exits, courts and yards. An accessible means of egress is one that complies with these guidelines and does not include stairs, steps, or escalators. Areas of rescue assistance or evacuation elevators may be included as part of accessible means of egress.*

Element. *An architectural or mechanical component of a building, facility, space, or site, e.g., telephone, curb ramp, door, drinking fountain, seating, or water closet.*

Entrance. *Any access point to a building or portion of a building or facility used for the purpose of entering. An entrance includes the approach walk, the vertical access leading to the entrance platform, the entrance platform itself, vestibules if provided, the entry door(s) or gate(s), and the hardware of the entry door(s) or gate(s).*

Facility. *All or any portion of buildings, structures, site improvements, complexes, equipment, roads, walks, passageways, parking lots, or other real or personal property located on a site.*

Ground Floor. *Any occupiable floor less than one story above or below grade with direct access to grade. A building or facility always has at least one ground floor and may have more than one ground floor as where a split level entrance has been provided or where a building is built into a hillside.*

Mezzanine or Mezzanine Floor. *That portion of a story which is an intermediate floor level placed within the story and having occupiable space above and below its floor.*

Marked Crossing. A crosswalk or other identified path intended for pedestrian use in crossing a vehicular way.

Multifamily Dwelling. Any building containing more than two dwelling units.

Occupiable. *A room or enclosed space designed for human occupancy in which individuals congregate for amusement, educational or similar purposes, or in which occupants are engaged at labor, and which is equipped with means of egress, light, and ventilation.*

Operable Part. A part of a piece of equipment or appliance used to insert or withdraw objects, or to activate, deactivate, or adjust the equipment or appliance (for example, coin slot, pushbutton, handle).

Path of Travel. *(Reserved).*

3.5 Definitions

Power-assisted Door. A door used *for human passage* with a mechanism that helps to open the door, or relieves the opening resistance of a door, upon the activation of a switch or a continued force applied to the door itself.

Principal Public Entrance(s). One or more public entrance(s) to a building or facility which are designed and constructed to accommodate a substantial flow of pedestrian traffic to a major function in a facility. Principal public entrances do not include: service entrances, employee only entrances, or exits that do not serve as entrances. In determining principal public entrance(s), the following factors should be considered:

(a) Travel distance from the entrance to:

(i) Exterior facilities such as parking, public transportation, public sidewalks and plazas; and

(ii) Interior amenities and services such as the main lobby, elevators and information desk.

(b) The embellishment of the entryway or any other design strategy which would make one entrance stand out prominently from other entrances.

Public Right-of-Way. See 14.1.1 (Definitions).

Public Sidewalk. See 14.1.1 (Definitions).

Public Sidewalk Curb Ramp. See 14.1.1 (Definitions).

Public Use. Describes interior or exterior rooms or spaces that are made available to the general public. Public use may be provided at a building or facility that is privately or publicly owned.

Ramp. A walking surface which has a running slope greater than 1:20.

Running Slope. The slope that is parallel to the direction of travel (see cross slope).

Service Entrance. An entrance intended primarily for delivery of goods or services.

Signage. *Displayed* verbal, symbolic, *tactile,* and pictorial information.

Site. A parcel of land bounded by a property line or a designated portion of a public right-of-way.

Site Improvement. Landscaping, paving for pedestrian and vehicular ways, outdoor lighting, recreational facilities, and the like, added to a site.

Site Infeasibility. See 14.1.1 (Definitions).

Sleeping Accommodations. Rooms in which people sleep; for example, dormitory and hotel or motel guest rooms or suites.

Space. *A definable area, e.g., room, toilet room, hall, assembly area, entrance, storage room, alcove, courtyard, or lobby.*

Story. *That portion of a building included between the upper surface of a floor and upper surface of the floor or roof next above. If such portion of a building does not include occupiable space, it is not considered a story for purposes of these guidelines. There may be more than one floor level within a story as in the case of a mezzanine or mezzanines.*

Structural Frame. The structural frame shall be considered to be the columns and the girders, beams, trusses and spandrels having direct connections to the columns and all other members which are essential to the stability of the building as a whole.

TTY. *Machinery or equipment that employs interactive graphic (i.e., typed) communications through the transmission of coded signals across the standard telephone network. TTYs can include, for example, devices known as TTYs (telecommunication display devices or telecommunication devices for deaf persons) or computers.*

Tactile. Describes an object that can be perceived using the sense of touch.

Technically Infeasible. See 4.1.6(1)(j) EXCEPTION.

Transient Lodging.* *A building, facility, or portion thereof, excluding inpatient medical care facilities and residential facilities, that contains sleeping accommodations. Transient lodging may include, but is not limited to, resorts, group homes, hotels, motels, and dormitories.*

Vehicular Way. A route intended for vehicular traffic, such as a street, driveway, or parking lot.

Walk. An exterior pathway with a prepared surface intended for pedestrian use, including general pedestrian areas such as plazas and courts.

NOTE: Sections 4.1.1 through 4.1.7 are different from ANSI A117.1 in their entirety and are printed in standard type (ANSI A117.1 does not include scoping provisions).

4. ACCESSIBLE ELEMENTS AND SPACES: SCOPE AND TECHNICAL REQUIREMENTS.

4.1 Minimum Requirements.

4.1.1* Application.

(1) General. All areas of newly designed or newly constructed buildings and facilities and altered portions of existing buildings and facilities shall comply with 4.1 through 4.35, unless otherwise provided in this section or as modified in a special application section.

(2) Application Based on Building Use. Special application sections provide additional requirements based on building use. When a building or facility contains more than one use covered by a special application section, each portion shall comply with the requirements for that use.

(3)* Areas Used Only by Employees as Work Areas. Areas that are used only as work areas shall be designed and constructed so that individuals with disabilities can approach, enter, and exit the areas. These guidelines do not require that any areas used only as work areas be constructed to permit maneuvering within the work area or be constructed or equipped (i.e., with racks or shelves) to be accessible.

(4) Temporary Structures. These guidelines cover temporary buildings or facilities as well as permanent facilities. Temporary buildings and facilities are not of permanent construction but are extensively used or are essential for public use for a period of time. Examples of temporary buildings or facilities covered by these guidelines include, but are not limited to: reviewing stands, temporary classrooms, bleacher areas, exhibit areas, temporary banking facilities, temporary health screening services, or temporary safe pedestrian passageways around a construction site. Structures, sites and equipment directly associated with the actual processes of construction, such as scaffolding, bridging, materials hoists, or construction trailers are not included.

(5) General Exceptions.

(a) In new construction, a person or entity is not required to meet fully the requirements of these guidelines where that person or entity can demonstrate that it is structurally impracticable to do so. Full compliance will be considered structurally impracticable only in those rare circumstances when the unique characteristics of terrain prevent the incorporation of accessibility features. If full compliance with the requirements of these guidelines is structurally impracticable, a person or entity shall comply with the requirements to the extent it is not structurally impracticable. Any portion of the building or facility which can be made accessible shall comply to the extent that it is not structurally impracticable.

(b) Accessibility is not required to or in:

(i) raised areas used primarily for purposes of security or life or fire safety, including, but not limited to, observation galleries, prison guard towers, fire towers, or fixed life guard stands;

(ii) non-occupiable spaces accessed only by ladders, catwalks, crawl spaces, very narrow passageways, tunnels, or freight (non-passenger) elevators, and frequented only by service personnel for maintenance, repair, or occasional monitoring of equipment; such spaces may include, but are not limited to, elevator pits, elevator penthouses, piping or equipment catwalks, water or sewage treatment pump rooms and stations, electric substations and transformer vaults, and highway and tunnel utility facilities; or

(iii) single occupant structures accessed only by passageways below grade or elevated above grade, including, but not limited to, toll booths that are required to be accessed from underground tunnels.

4.1.2 Accessible Sites and Exterior Facilities: New Construction. An accessible site shall meet the following minimum requirements:

(1) At least one accessible route complying with 4.3 shall be provided within the boundary of the site from public transportation stops, accessible parking spaces, passenger loading zones if provided, and public streets or sidewalks, to an accessible building entrance.

(2) At least one accessible route complying with 4.3 shall connect accessible buildings, accessible facilities, accessible elements, and accessible spaces that are on the same site.

(3) All objects that protrude from surfaces or posts into circulation paths shall comply with 4.4.

(4) Ground surfaces along accessible routes and in accessible spaces shall comply with 4.5.

(5) (a) If parking spaces are provided for self-parking by employees or visitors, or both, then accessible spaces complying with 4.6 shall be provided in each such parking area in conformance with the table below. Spaces required by the table need not be provided in the particular lot. They may be provided in a different location if equivalent or greater accessibility, in terms of distance from an accessible entrance, cost and convenience is ensured.

TOTAL PARKING IN LOT	REQUIRED MINIMUM NUMBER OF ACCESSIBLE SPACES
1 to 25	1
26 to 50	2
51 to 75	3
76 to 100	4
101 to 150	5
151 to 200	6
201 to 300	7
301 to 400	8
401 to 500	9
501 to 1000	2 percent of total
1001 and over	20, plus 1 for each 100 over 1000

Except as provided in (b), access aisles adjacent to accessible spaces shall be 60 in (1525 mm) wide minimum.

(b) One in every eight accessible spaces, but not less than one, shall be served by an access aisle 96 in (2440 mm) wide minimum and shall be designated "van accessible" as required by 4.6.4. The vertical clearance at such spaces shall comply with 4.6.5. All such spaces may be grouped on one level of a parking structure.

EXCEPTION: Provision of all required parking spaces in conformance with "Universal Parking Design" (see Appendix A4.6.3) is permitted.

(c) If passenger loading zones are provided, then at least one passenger loading zone shall comply with 4.6.

(d) At facilities providing medical care or other services for persons with mobility impairments, parking spaces complying with 4.6 shall be provided in accordance with 4.1.2(5)(a) and (b) except as follows:

(i) Outpatient units and facilities: 10 percent of the total number of parking spaces provided serving each such outpatient unit or facility;

(ii) Units and facilities that specialize in treatment or services for persons with mobility impairments: 20 percent of the total number of parking spaces provided serving each such unit or facility.

(e)* Valet Parking. Valet parking facilities shall provide a passenger loading zone complying with 4.6 located on an accessible route to the entrance of the facility. Paragraphs 5(a), 5(b), and 5(d) of this section do not apply to valet parking facilities.

(6) If toilet facilities are provided on a site, then each such public or common use toilet facility shall comply with 4.22. If bathing facilities are provided on a site, then each such public or common use bathing facility shall comply with 4.23.

For single user portable toilet or bathing units clustered at a single location, at least five percent but no less than one toilet unit or bathing unit complying with 4.22 or 4.23 shall be installed at each cluster whenever typical inaccessible units are provided. Accessible units shall be identified by the International Symbol of Accessibility.

EXCEPTION: Portable toilet units at construction sites used exclusively by construction personnel are not required to comply with 4.1.2(6).

(7) Building Signage. Signs which designate permanent rooms and spaces shall comply with 4.30.1, 4.30.4, 4.30.5 and 4.30.6. Other signs which provide direction to, or information about, functional spaces of the building shall comply with 4.30.1, 4.30.2, 4.30.3, and 4.30.5. Elements and spaces of accessible facilities which shall be identified by the International Symbol of Accessibility and which shall comply with 4.30.7 are:

(a) Parking spaces designated as reserved for individuals with disabilities;

(b) Accessible passenger loading zones;

(c) Accessible entrances when not all are accessible (inaccessible entrances shall have directional signage to indicate the route to the nearest accessible entrance);

(d) Accessible toilet and bathing facilities when not all are accessible.

4.1.3 Accessible Buildings: New Construction. Accessible buildings and facilities shall meet the following minimum requirements:

(1) At least one accessible route complying with 4.3 shall connect accessible building or facility entrances with all accessible spaces and elements within the building or facility.

(2) All objects that overhang or protrude into circulation paths shall comply with 4.4.

(3) Ground and floor surfaces along accessible routes and in accessible rooms and spaces shall comply with 4.5.

(4) Interior and exterior stairs connecting levels that are not connected by an elevator, ramp, or other accessible means of vertical access shall comply with 4.9.

(5)* One passenger elevator complying with 4.10 shall serve each level, including mezzanines, in all multi-story buildings and facilities unless exempted below. If more than one elevator is provided, each passenger elevator shall comply with 4.10.

EXCEPTION 1: Elevators are not required:

(a) in places of public accommodation and commercial facilities that are less than three stories or that have less than 3000 square feet per story unless the building is a shopping center, a shopping mall, or the professional office of a health care provider, or another type of facility as determined by the Attorney General; or

(b) to the upper level of drawbridge towers and boat traffic towers, lock and dam control stations, train dispatching towers, and similar structures that are less than three stories and that are not open to the general public if the floor above the accessible ground floor houses no more than five persons and is less than 500 square feet.

The elevator exemptions set forth in paragraphs (a) and (b) do not obviate or limit in any way the obligation to comply with the other accessibility requirements established in section 4.1.3. For example, floors above or below the accessible ground floor must meet the requirements of this section except for elevator service. If toilet or bathing facilities are provided on a level not served by an elevator, then toilet or bathing facilities must be provided on the accessible ground floor. In new construction if a building or facility is eligible for exemption but a passenger elevator is nonetheless planned, that elevator shall meet the requirements of 4.10 and shall serve each level in the building. A passenger elevator that provides service from a garage to only one level of a building or facility is not required to serve other levels.

EXCEPTION 2: Elevator pits, elevator penthouses, mechanical rooms, piping or equipment catwalks are exempted from this requirement.

EXCEPTION 3: Accessible ramps complying with 4.8 may be used in lieu of an elevator.

EXCEPTION 4: Platform lifts (wheelchair lifts) complying with 4.11 of this guideline and applicable State or local codes may be used in lieu of an elevator only under the following conditions:

(a) To provide an accessible route to a performing area in an assembly occupancy.

4.1.3 Accessible Buildings: New Construction

(b) To comply with the wheelchair viewing position line-of-sight and dispersion requirements of 4.33.3.

(c) To provide access to incidental occupiable spaces and rooms which are not open to the general public and which house no more than five persons, including but not limited to equipment control rooms and projection booths.

(d) To provide access where existing site constraints or other constraints make use of a ramp or an elevator infeasible.

(e) To provide access to raised judges' benches, clerks' stations, speakers' rostrums, and raised daises, jury boxes and witness stands.

(f) To connect levels within an individual dwelling unit.

EXCEPTION 5: Elevators located in air traffic control towers are not required to serve the cab and the floor immediately below the cab.

(6) Windows. (Reserved).

(7) Doors.

(a) At each accessible entrance to a building or facility, at least one door shall comply with 4.13.

(b) Within a building or facility, at least one door at each accessible space shall comply with 4.13.

(c) Each door that is an element of an accessible route shall comply with 4.13.

(d) Each door required by 4.3.10, Egress, shall comply with 4.13.

(8)* In new construction, at a minimum, the requirements in (a) and (b) below shall be satisfied independently:

(a)(i) At least 50 percent of all public entrances (excluding those in (b) below) must be accessible. At least one must be a ground floor entrance. Public entrances are any entrances that are not loading or service entrances. In facilities subject to title II of the ADA, all planned principal public entrances shall be included within the 50 percent of public entrances required to be accessible. This provision does not require the number of principal public entrances to exceed 50 percent of all public entrances planned for a facility.

(ii) Accessible entrances must be provided in a number at least equivalent to the number of exits required by the applicable building/fire codes. (This paragraph does not require an increase in the total number of entrances or principal public entrances planned for a facility.)

(iii) An accessible entrance must be provided to each tenancy in a facility (for example, individual stores in a strip shopping center).

One entrance may be considered as meeting more than one of the requirements in (a). Where feasible, accessible entrances shall be the entrances used by the majority of people visiting or working in the building.

(b)(i) In addition, if direct access is provided for pedestrians from an enclosed parking garage to the building, at least one direct entrance from the garage to the building must be accessible.

(ii) If access is provided for pedestrians from a pedestrian tunnel or elevated walkway, one entrance to the building from each tunnel or walkway must be accessible.

One entrance may be considered as meeting more than one of the requirements in (b).

Because entrances also serve as emergency exits whose proximity to all parts of buildings and facilities is essential, it is preferable that all entrances be accessible.

(c) If the only entrance to a building, or tenancy in a facility, is a service entrance, that entrance shall be accessible.

(d) Entrances which are not accessible shall have directional signage complying with 4.30.1, 4.30.2, 4.30.3, and 4.30.5, which indicates the location of the nearest accessible entrance.

4.1.3 Accessible Buildings: New Construction

(9)* In buildings or facilities, or portions of buildings or facilities, required to be accessible, accessible means of egress shall be provided in the same number as required for exits by local building/life safety regulations. Where a required exit from an occupiable level above or below a level of accessible exit discharge is not accessible, an area of rescue assistance shall be provided on each such level (in a number equal to that of inaccessible required exits). Areas of rescue assistance shall comply with 4.3.11. A horizontal exit, meeting the requirements of local building/life safety regulations, shall satisfy the requirement for an area of rescue assistance.

EXCEPTION: Areas of rescue assistance are not required in buildings or facilities having a supervised automatic sprinkler system.

(10)* Drinking Fountains.

(a) Where only one drinking fountain is provided on a floor there shall be a drinking fountain which is accessible to individuals who use wheelchairs in accordance with 4.15 and one accessible to those who have difficulty bending or stooping. (This can be accommodated by the use of a "hi-lo" fountain; by providing one fountain accessible to those who use wheelchairs and one fountain at a standard height convenient for those who have difficulty bending; by providing a fountain accessible under 4.15 and a water cooler; or by such other means as would achieve the required accessibility for each group on each floor.)

(b) Where more than one drinking fountain or water cooler is provided on a floor, 50 percent of those provided shall comply with 4.15 and shall be on an accessible route.

(11) Toilet Facilities. If toilet rooms are provided, then each public and common use toilet room shall comply with 4.22. Other toilet rooms provided for the use of occupants of specific spaces (i.e., a private toilet room for the occupant of a private office) shall be adaptable. If bathing rooms are provided, then each public and common use bathroom shall comply with 4.23. Accessible toilet rooms and bathing facilities shall be on an accessible route.

(12) Storage, Shelving and Display Units.

(a) If fixed or built-in storage facilities such as cabinets, shelves, closets, and drawers are provided in accessible spaces, at least one of each type provided shall contain storage space complying with 4.25. Additional storage may be provided outside of the dimensions required by 4.25.

(b) Shelves or display units allowing self-service by customers in mercantile occupancies shall be located on an accessible route complying with 4.3. Requirements for accessible reach range do not apply.

(13) Controls and operating mechanisms in accessible spaces, along accessible routes, or as parts of accessible elements (for example, light switches and dispenser controls) shall comply with 4.27.

(14) If emergency warning systems are provided, then they shall include both audible alarms and visible alarms complying with 4.28. Sleeping accommodations required to comply with 9.3 shall have an alarm system complying with 4.28. Emergency warning systems in medical care facilities may be modified to suit standard health care alarm design practice.

(15) Detectable warnings shall be provided at locations as specified in 4.29.

(16) Building Signage.

(a) Signs which designate permanent rooms and spaces shall comply with 4.30.1, 4.30.4, 4.30.5 and 4.30.6.

(b) Other signs which provide direction to or information about functional spaces of the building shall comply with 4.30.1, 4.30.2, 4.30.3, and 4.30.5.

EXCEPTION: Building directories, menus, and all other signs which are temporary are not required to comply.

4.1.3 Accessible Buildings: New Construction

(17) Public telephones.

(a) If public pay telephones, public closed circuit telephones, or other public telephones are provided, then they shall comply with 4.31.2 through 4.31.8 to the extent required by the following table:

Number of each type of telephone provided on each floor	Number of telephones required to comply with 4.31.2 through 4.31.8[1]
1 or more single unit	1 per floor
1 bank[2]	1 per floor
2 or more banks[2]	1 per bank. Accessible unit may be installed as a single unit in proximity (either visible or with signage) to the bank. At least one public telephone per floor shall meet the requirements for a forward reach telephone.[3]

[1] Additional public telephones may be installed at any height. Unless otherwise specified, accessible telephones may be either forward or side reach telephones.

[2] A bank consists of two or more adjacent public telephones, often installed as a unit.

[3] EXCEPTION: For exterior installations only, if dial tone first service is available, then a side reach telephone may be installed instead of the required forward reach telephone.

(b)* All telephones required to be accessible and complying with 4.31.2 through 4.31.8 shall be equipped with a volume control. In addition, 25 percent, but never less than one, of all other public telephones provided shall be equipped with a volume control and shall be dispersed among all types of public telephones, including closed circuit telephones, throughout the building or facility. Signage complying with applicable provisions of 4.30.7 shall be provided.

(c) The following shall be provided in accordance with 4.31.9:

(i) If a total number of four or more public pay telephones (including both interior and exterior phones) is provided at a site, and at least one is in an interior location, then at least one interior public TTY shall be provided.

(ii) If an interior public pay telephone is provided in a stadium or arena, a convention center, a hotel with a convention center, or a covered mall subject to title III of the ADA, at least one interior public TTY shall be provided in the facility. In stadiums, arenas and convention centers which are subject to title II of the ADA, at least one public TTY shall be provided on each floor level having a public pay telephone.

(iii) If a public pay telephone is located in or adjacent to a hospital emergency room, hospital recovery room, or hospital waiting room, one public TTY shall be provided at each such location.

(iv) If an interior public pay telephone is provided in a public use area of a facility covered by title II of the ADA, at least one interior public TTY shall be provided in at least one public use area.

(v) If an interior public pay telephone is provided in the secured area of a detention or correctional facility subject to section 12, then at least one public TTY shall also be provided in at least one secured area. Secured areas are those areas used only by detainees or inmates and security personnel.

(d) Where a bank of telephones in the interior of a building consists of three or more public pay telephones, at least one public pay telephone in each such bank shall be equipped with a shelf and outlet in compliance with 4.31.9(2).

EXCEPTION: This requirement does not apply to the secured areas of detention or correctional facilities where shelves and outlets are prohibited for purposes of security or safety.

(18) If fixed or built-in seating or tables (including, but not limited to, study carrels and student laboratory stations), are provided in accessible public or common use areas, at least five percent, but not less than one, of the fixed or built-in seating areas or tables shall comply with 4.32. An accessible route shall lead to and through such fixed or built-in seating areas, or tables.

(19)* Assembly Areas.

(a) In places of assembly with fixed seating, accessible wheelchair locations shall comply with 4.33.2, 4.33.3, and 4.33.4 and shall be provided consistent with the following table:

Capacity of Seating in Assembly Areas	Number of Required Wheelchair Locations
4 to 25	1
26 to 50	2
51 to 300	4
301 to 500	6
over 500	6, plus 1 additional space for each total seating capacity increase of 100

In addition, one percent, but not less than one, of all fixed seats shall be aisle seats with no armrests on the aisle side, or removable or folding armrests on the aisle side. Each such seat shall be identified by a sign or marker. Signage notifying patrons of the availability of such seats shall be posted at the ticket office. Aisle seats are not required to comply with 4.33.4.

(b) This paragraph applies to assembly areas where audible communications are integral to the use of the space (e.g., concert and lecture halls, playhouses and movie theaters, meeting rooms, etc.). Such assembly areas, if (1) they accommodate at least 50 persons, or if they have audio-amplification systems, and (2) they have fixed seating, shall have a permanently installed assistive listening system complying with 4.33. For other assembly areas, a permanently installed assistive listening system, or an adequate number of electrical outlets or other supplementary wiring necessary to support a portable assistive listening system shall be provided. The minimum number of receivers to be provided shall be equal to four percent of the total number of seats, but in no case less than two. Signage complying with applicable provisions of 4.30 shall be installed to notify patrons of the availability of a listening system.

(20) Where automated teller machines are provided, each machine shall comply with the requirements of 4.34 except where two or more machines are provided at a location, then only one must comply.

EXCEPTION: Drive-up-only automated teller machines are not required to comply with 4.34.2 and 4.34.3.

(21) Where dressing and fitting rooms are provided for use by the general public, patients, customers or employees, five percent of dressing rooms, but never less than one, for each type of use in each cluster of dressing rooms shall be accessible and shall comply with 4.35.

Examples of types of dressing rooms are those serving different genders or distinct and different functions as in different treatment or examination facilities.

(22) Permanently-installed (indoor or outdoor) swimming pools subject to title II of the ADA shall be designed so as to provide at least one means of access into the water, if such swimming pools are intended for recreational purposes and not intended solely for diving or wading.

4.1.4 (Reserved).

4.1.5 Accessible Buildings: Additions. Each addition to an existing building or facility shall be regarded as an alteration. Each space or element added to the existing building or facility shall comply with the applicable provisions of 4.1.1 to 4.1.3, Minimum Requirements (for New Construction) and the applicable technical specifications of 4.2 through 4.35 and the special application sections. Each addition that affects or could affect the usability of an area containing a primary function shall comply with 4.1.6(2).

4.1.6 Accessible Buildings: Alterations.

(1) General. Alterations to existing buildings and facilities shall comply with the following:

(a) No alteration shall be undertaken which decreases or has the effect of decreasing accessibility or usability of a building or facility below the requirements for new construction at the time of alteration.

(b) If existing elements, spaces, or common areas are altered, then each such altered element, space, feature, or area shall comply with the applicable provisions of 4.1.1 to 4.1.3 Minimum Requirements (for New Construc-

4.1.6 Accessible Buildings: Alterations

tion). If the applicable provision for new construction requires that an element, space, or common area be on an accessible route, the altered element, space, or common area is not required to be on an accessible route except as provided in 4.1.6(2) (Alterations to an Area Containing a Primary Function).

(c) If alterations of single elements, when considered together, amount to an alteration of a room or space in a building or facility, the entire space shall be made accessible.

(d) No alteration of an existing element, space, or area of a building or facility shall impose a requirement for greater accessibility than that which would be required for new construction. For example, if the elevators and stairs in a building are being altered and the elevators are, in turn, being made accessible, then no accessibility modifications are required to the stairs connecting levels connected by the elevator. If stair modifications to correct unsafe conditions are required by other codes, the modifications shall be done in compliance with these guidelines unless technically infeasible.

(e) At least one interior public TTY complying with 4.31.9 shall be provided if:

(i) alterations to existing buildings or facilities with less than four exterior or interior public pay telephones would increase the total number to four or more telephones with at least one in an interior location; or

(ii) alterations to one or more exterior or interior public pay telephones occur in an existing building or facility with four or more public telephones with at least one in an interior location.

(f) If an escalator or stair is planned or installed where none existed previously and major structural modifications are necessary for such installation, then a means of accessible vertical access shall be provided that complies with the applicable provisions of 4.7, 4.8, 4.10, or 4.11.

(g) In alterations, the requirements of 4.1.3(9), 4.3.10 and 4.3.11 do not apply.

(h)* Entrances. If a planned alteration entails alterations to an entrance, and the building has an accessible entrance, the entrance being altered is not required to comply with 4.1.3(8), except to the extent required by 4.1.6(2). If a particular entrance is not made accessible, appropriate accessible signage indicating the location of the nearest accessible entrance(s) shall be installed at or near the inaccessible entrance, such that a person with disabilities will not be required to retrace the approach route from the inaccessible entrance.

(i) If the alteration work is limited solely to the electrical, mechanical, or plumbing system, or to hazardous material abatement, or automatic sprinkler retrofitting, and does not involve the alteration of any elements or spaces required to be accessible under these guidelines, then 4.1.6(2) does not apply.

(j) EXCEPTION: In alteration work, if compliance with 4.1.6 is technically infeasible, the alteration shall provide accessibility to the maximum extent feasible. Any elements or features of the building or facility that are being altered and can be made accessible shall be made accessible within the scope of the alteration.

Technically Infeasible. Means, with respect to an alteration of a building or a facility, that it has little likelihood of being accomplished because existing structural conditions would require removing or altering a load-bearing member which is an essential part of the structural frame; or because other existing physical or site constraints prohibit modification or addition of elements, spaces, or features which are in full and strict compliance with the minimum requirements for new construction and which are necessary to provide accessibility.

(k) EXCEPTION:

(i) These guidelines do not require the installation of an elevator in an altered facility that is exempt from the requirement for an elevator under 4.1.3(5).

(ii) The exemption provided in paragraph (i) does not obviate or limit in any way the obligation to comply with the other accessibility requirements established in these guidelines. For example, alterations to floors above or below the ground floor must be accessible regardless of whether the altered facility has an elevator. If a facility subject to the elevator exemption set forth in paragraph (i) nonetheless has a passenger elevator, that elevator

shall meet, to the maximum extent feasible, the accessibility requirements of these guidelines.

(2) Alterations to an Area Containing a Primary Function. In addition to the requirements of 4.1.6(1), an alteration that affects or could affect the usability of or access to an area containing a primary function shall be made so as to ensure that, to the maximum extent feasible, the path of travel to the altered area and the restrooms, telephones, and drinking fountains serving the altered area, are readily accessible to and usable by individuals with disabilities, unless such alterations are disproportionate to the overall alterations in terms of cost and scope (as determined under criteria established by the Attorney General).

(3) Special Technical Provisions for Alterations to Existing Buildings and Facilities.

(a) Ramps. Curb ramps and interior or exterior ramps to be constructed on sites or in existing buildings or facilities where space limitations prohibit the use of a 1:12 slope or less may have slopes and rises as follows:

(i) A slope between 1:10 and 1:12 is allowed for a maximum rise of 6 in (152 mm).

(ii) A slope between 1:8 and 1:10 is allowed for a maximum rise of 3 in (76 mm). A slope steeper than 1:8 is not allowed.

(b) Stairs. Full extension of handrails at stairs shall not be required in alterations where such extensions would be hazardous or impossible due to plan configuration.

(c) Elevators.

(i) If safety door edges are provided in existing automatic elevators, automatic door reopening devices may be omitted (see 4.10.6).

(ii) Where existing shaft configuration or technical infeasibility prohibits strict compliance with 4.10.9, the minimum car plan dimensions may be reduced by the minimum amount necessary, but in no case shall the inside car area be smaller than 48 in by 48 in (1220 mm by 1220 mm).

(iii) Equivalent facilitation may be provided with an elevator car of different dimensions when usability can be demonstrated and when all other elements required to be accessible comply with the applicable provisions of 4.10. For example, an elevator of 47 in by 69 in (1195 mm by 1755 mm) with a door opening on the narrow dimension, could accommodate the standard wheelchair clearances shown in Fig. 4.

(d) Doors.

(i) Where it is technically infeasible to comply with clear opening width requirements of 4.13.5, a projection of 5/8 in (16 mm) maximum will be permitted for the latch side stop.

(ii) If existing thresholds are 3/4 in (20 mm) high or less, and have (or are modified to have) a beveled edge on each side, they may remain.

(e) Toilet Rooms.

(i) Where it is technically infeasible to comply with 4.22 or 4.23, the installation of at least one unisex toilet/bathroom per floor, located in the same area as existing toilet facilities, will be permitted in lieu of modifying existing toilet facilities to be accessible. Each unisex toilet room shall contain one water closet complying with 4.16 and one lavatory complying with 4.19, and the door shall have a privacy latch.

(ii) Where it is technically infeasible to install a required standard stall (Fig. 30(a)), or where other codes prohibit reduction of the fixture count (i.e., removal of a water closet in order to create a double-wide stall), either alternate stall (Fig. 30(b)) may be provided in lieu of the standard stall.

(iii) When existing toilet or bathing facilities are being altered and are not made accessible, signage complying with 4.30.1, 4.30.2, 4.30.3, 4.30.5, and 4.30.7 shall be provided indicating the location of the nearest accessible toilet or bathing facility within the facility.

(f) Assembly Areas.

(i) Where it is technically infeasible to disperse accessible seating throughout an altered assembly area, accessible seating areas may be clustered. Each accessible seating area shall have provisions for companion seating and shall be located on an accessible route that also serves as a means of emergency egress.

4.1.7 Accessible Buildings: Historic Preservation

(ii) Where it is technically infeasible to alter all performing areas to be on an accessible route, at least one of each type of performing area shall be made accessible.

(g) Platform Lifts (Wheelchair Lifts). In alterations, platform lifts (wheelchair lifts) complying with 4.11 and applicable state or local codes may be used as part of an accessible route. The use of lifts is not limited to the four conditions in Exception 4 of 4.1.3(5).

(h) Dressing Rooms. In alterations where technical infeasibility can be demonstrated, one dressing room for each sex on each level shall be made accessible. Where only unisex dressing rooms are provided, accessible unisex dressing rooms may be used to fulfill this requirement.

4.1.7 Accessible Buildings: Historic Preservation.

(1) Applicability.

(a) General Rule. Alterations to a qualified historic building or facility shall comply with 4.1.6 (Accessible Buildings: Alterations), the applicable technical specifications of 4.2 through 4.35 and the applicable special application sections unless it is determined in accordance with the procedures in 4.1.7(2) that compliance with the requirements for accessible routes (exterior and interior), ramps, entrances, or toilets would threaten or destroy the historic significance of the building or facility in which case the alternative requirements in 4.1.7(3) may be used for the feature.

EXCEPTION: If it is determined in accordance with the procedures in 4.1.7(2) that it is not feasible to provide physical access to a qualified historic building or facility in a manner that will not threaten or destroy the historic significance of the building or facility, alternative methods of access shall be provided as required by 28 CFR 35.151(d)(2) for entities covered by title II of the ADA and 28 CFR 36.405(b) for entities covered by title III of the ADA.

(b) Definition. A qualified historic building or facility is a building or facility that is:

(i) Listed in or eligible for listing in the National Register of Historic Places; or

(ii) Designated as historic under an appropriate State or local law.

(2) Procedures.

(a) Alterations to Qualified Historic Buildings and Facilities Subject to Section 106 of the National Historic Preservation Act.

(i) Section 106 Process. Section 106 of the National Historic Preservation Act (16 U.S.C. 470f) requires that a Federal agency with jurisdiction over a Federal, federally assisted, or federally licensed undertaking consider the effects of the agency's undertaking on buildings and facilities listed in or eligible for listing in the National Register of Historic Places and give the Advisory Council on Historic Preservation a reasonable opportunity to comment on the undertaking prior to approval of the undertaking.

(ii) ADA Application. Where alterations are undertaken to a qualified historic building or facility that is subject to section 106 of the National Historic Preservation Act, the Federal agency with jurisdiction over the undertaking shall follow the section 106 process. If the State Historic Preservation Officer or Advisory Council on Historic Preservation agrees that compliance with the requirements for accessible routes (exterior and interior), ramps, entrances, or toilets would threaten or destroy the historic significance of the building or facility, the alternative requirements in 4.1.7(3) may be used for the feature.

(b) Alterations to Qualified Historic Buildings and Facilities Not Subject to Section 106 of the National Historic Preservation Act. Where alterations are undertaken to a qualified historic building or facility that is not subject to section 106 of the National Historic Preservation Act, if the entity undertaking the alterations believes that compliance with the requirements for accessible routes (exterior and interior), ramps, entrances, or toilets would threaten or destroy the historic significance of the building or facility and that the alternative requirements in 4.1.7(3) should be used for the feature, the entity should consult with the State Historic Preservation Officer. If the State Historic Preservation Officer agrees that compliance with the accessibility requirements for accessible routes (exterior and interior), ramps, entrances or toilets would

threaten or destroy the historical significance of the building or facility, the alternative requirements in 4.1.7(3) may be used.

(c) Consultation With Interested Persons. Interested persons should be invited to participate in the consultation process, including State or local accessibility officials, individuals with disabilities, and organizations representing individuals with disabilities.

(d) Certified Local Government Historic Preservation Programs. Where the State Historic Preservation Officer has delegated the consultation responsibility for purposes of this section to a local government historic preservation program that has been certified in accordance with section 101(c) of the National Historic Preservation Act of 1966 (16 U.S.C. 470a (c)) and implementing regulations (36 CFR 61.5), the responsibility may be carried out by the appropriate local government body or official.

(3) Historic Preservation: Minimum Requirements.

(a) At least one accessible route complying with 4.3 from a site access point to an accessible entrance shall be provided.

EXCEPTION: A ramp with a slope no greater than 1:6 for a run not to exceed 2 ft (610 mm) may be used as part of an accessible route to an entrance.

(b) At least one accessible entrance complying with 4.14 which is used by the public shall be provided.

EXCEPTION: If it is determined that no entrance used by the public can comply with 4.14, then access at any entrance not used by the general public but open (unlocked) with directional signage at the primary entrance may be used. The accessible entrance shall also have a notification system. Where security is a problem, remote monitoring may be used.

(c) If toilets are provided, then at least one toilet facility complying with 4.22 and 4.1.6 shall be provided along an accessible route that complies with 4.3. Such toilet facility may be unisex in design.

(d) Accessible routes from an accessible entrance to all publicly used spaces on at least the level of the accessible entrance shall be provided. Access shall be provided to all levels of a building or facility in compliance with 4.1 whenever practical.

(e) Displays and written information, documents, etc., should be located where they can be seen by a seated person. Exhibits and signage displayed horizontally (e.g., open books), should be no higher than 44 in (1120 mm) above the floor surface.

NOTE: The technical provisions of sections 4.2 through 4.35 are the same as those of the American National Standard Institute's document A117.1-1980, except as noted in the text.

4.2 Space Allowance and Reach Ranges.

4.2.1* Wheelchair Passage Width. The minimum clear width for single wheelchair passage shall be 32 in (815 mm) at a point and 36 in (915 mm) continuously (see Fig. 1 and 24(e)).

4.2.2 Width for Wheelchair Passing. The minimum width for two wheelchairs to pass is 60 in (1525 mm) (see Fig. 2).

4.2.3* Wheelchair Turning Space. The space required for a wheelchair to make a 180-degree turn is a clear space of 60 in (1525 mm) diameter (see Fig. 3(a)) or a T-shaped space (see Fig. 3(b)).

4.2.4* Clear Floor or Ground Space for Wheelchairs

4.2.4* Clear Floor or Ground Space for Wheelchairs.

4.2.4.1 Size and Approach. The minimum clear floor or ground space required to accommodate a single, stationary wheelchair and occupant is 30 in by 48 in (760 mm by 1220 mm) (see Fig. 4(a)). The minimum clear floor or ground space for wheelchairs may be positioned for forward or parallel approach to an object (see Fig. 4(b) and (c)). Clear floor or ground space for wheelchairs may be part of the knee space required under some objects.

4.2.4.2 Relationship of Maneuvering Clearance to Wheelchair Spaces. One full unobstructed side of the clear floor or ground space for a wheelchair shall adjoin or overlap an accessible route or adjoin another wheelchair clear floor space. If a clear floor space is located in an alcove or otherwise confined on all or part of three sides, additional maneuvering clearances shall be provided as shown in Fig. 4(d) and (e).

4.2.4.3 Surfaces for Wheelchair Spaces. Clear floor or ground spaces for wheelchairs shall comply with 4.5.

4.2.5* Forward Reach. If the clear floor space only allows forward approach to an object, the maximum high forward reach allowed shall be 48 in (1220 mm) (see Fig. 5(a)). *The minimum low forward reach is 15 in (380 mm).* If the high forward reach is over an obstruction, reach and clearances shall be as shown in Fig. 5(b).

4.2.6* Side Reach. If the clear floor space allows parallel approach by a person in a wheelchair, the maximum high side reach allowed shall be 54 in (1370 mm) and the low side reach shall be no less than 9 in (230 mm) above the floor (Fig. 6(a) and (b)). If the side reach is over an obstruction, the reach and clearances shall be as shown in Fig. 6(c).

4.3 Accessible Route.

4.3.1* General. All walks, halls, corridors, aisles, *skywalks, tunnels,* and other spaces

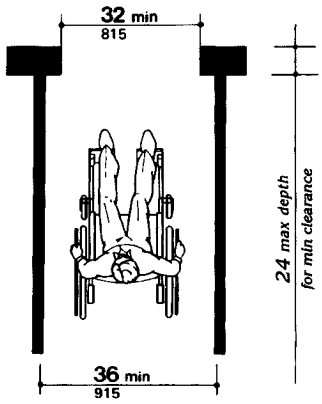

Fig. 1
Minimum Clear Width for Single Wheelchair

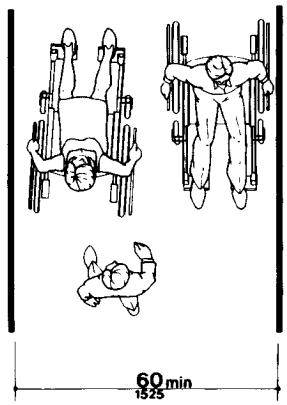

Fig. 2
Minimum Clear Width for Two Wheelchairs

4.3 Accessible Route

that are part of an accessible route shall comply with 4.3.

4.3.2 Location.

(1) At least one accessible route *within the boundary of the site* shall be provided from public transportation stops, accessible parking, and accessible passenger loading zones, and public streets or sidewalks to the accessible building entrance they serve. *The accessible route shall, to the maximum extent feasible, coincide with the route for the general public.*

(2) At least one accessible route shall connect accessible buildings, facilities, elements, and spaces that are on the same site.

(3) At least one accessible route shall connect accessible building or facility entrances with all accessible spaces and elements and with all accessible dwelling units within the building or facility.

(4) An accessible route shall connect at least one accessible entrance of each accessible dwelling unit with those exterior and interior spaces and facilities that serve the accessible dwelling unit.

4.3.3 Width. The minimum clear width of an accessible route shall be 36 in (915 mm) except at doors (see 4.13.5 and 4.13.6). If a person in a wheelchair must make a turn around an obstruction, the minimum clear width of the accessible route shall be as shown in Fig. 7(a) and (b).

4.3.4 Passing Space. If an accessible route has less than 60 in (1525 mm) clear width, then passing spaces at least 60 in by 60 in (1525 mm by 1525 mm) shall be located at reasonable intervals not to exceed 200 ft (61 m). A T-intersection of two corridors or walks is an acceptable passing place.

4.3.5 Head Room. Accessible routes shall comply with 4.4.2.

4.3.6 Surface Textures. The surface of an accessible route shall comply with 4.5.

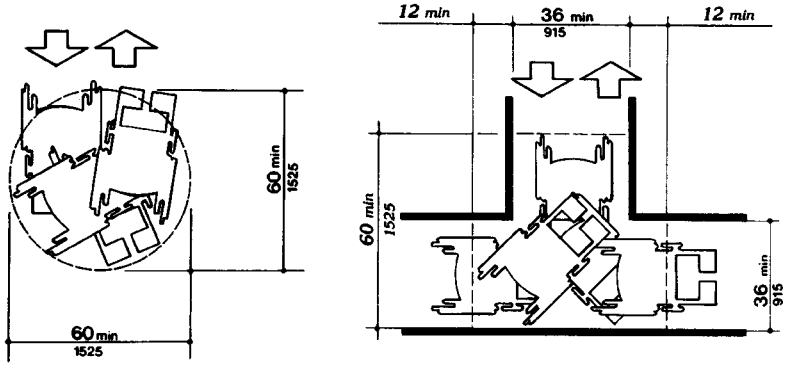

(a)
60-in (1525-mm)-Diameter Space

(b)
T-Shaped Space for 180° Turns

Fig. 3
Wheelchair Turning Space

4.3 Accessible Route

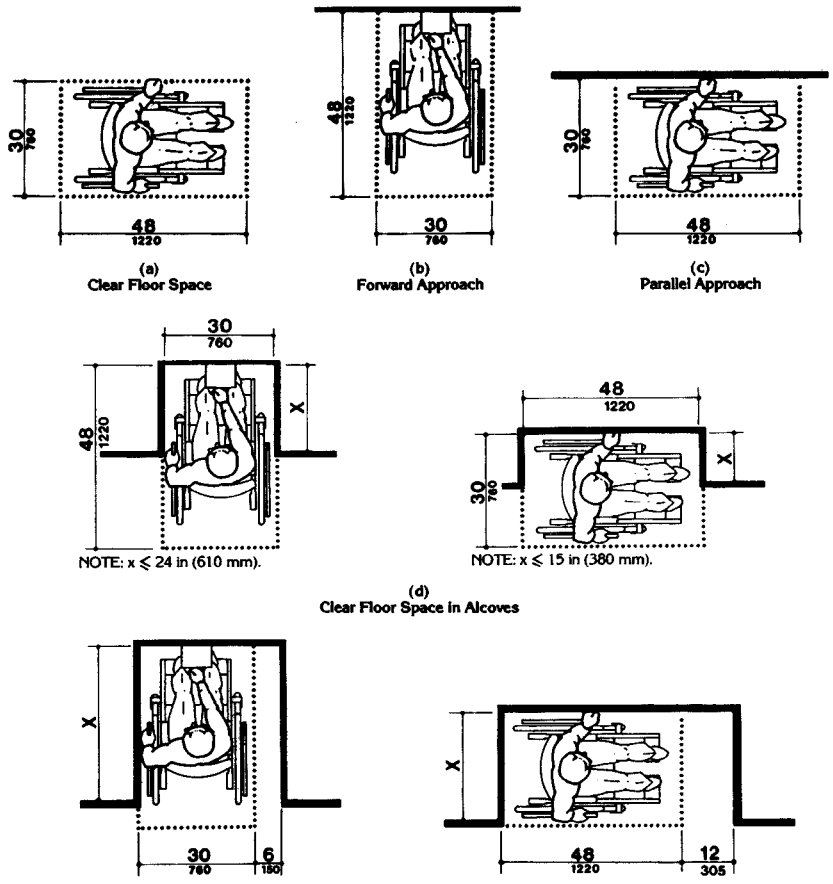

Fig. 4
Minimum Clear Floor Space for Wheelchairs

17

4.3 Accessible Route

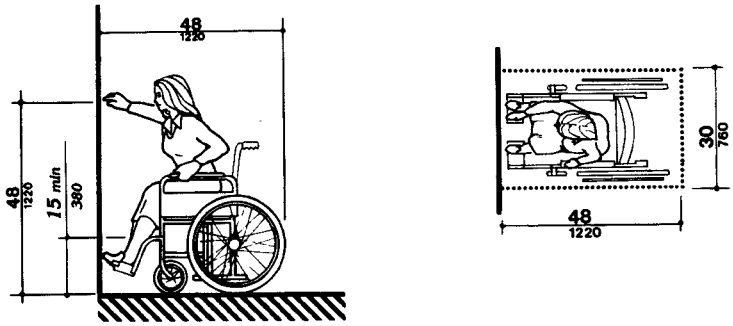

(a)
High Forward Reach Limit

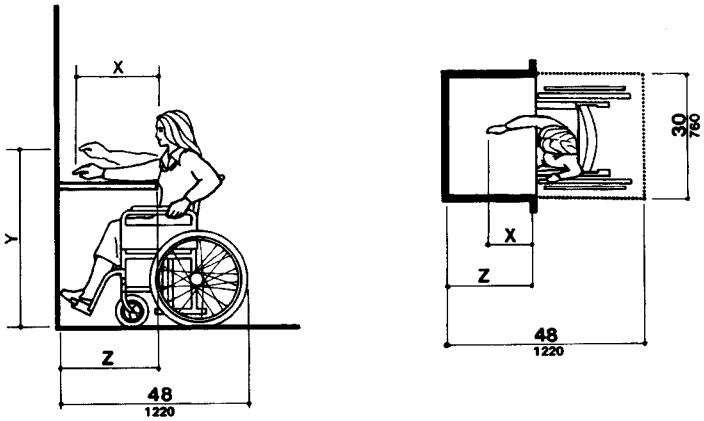

NOTE: x shall be ≤ 25 in (635 mm); z shall be ≥ x. When x < 20 in (510 mm), then y shall be 48 in (1220 mm) maximum. When x is 20 to 25 in (510 to 635 mm), then y shall be 44 in (1120 mm) maximum.

(b)
Maximum Forward Reach over an Obstruction

Fig. 5
Forward Reach

4.3.7 Slope

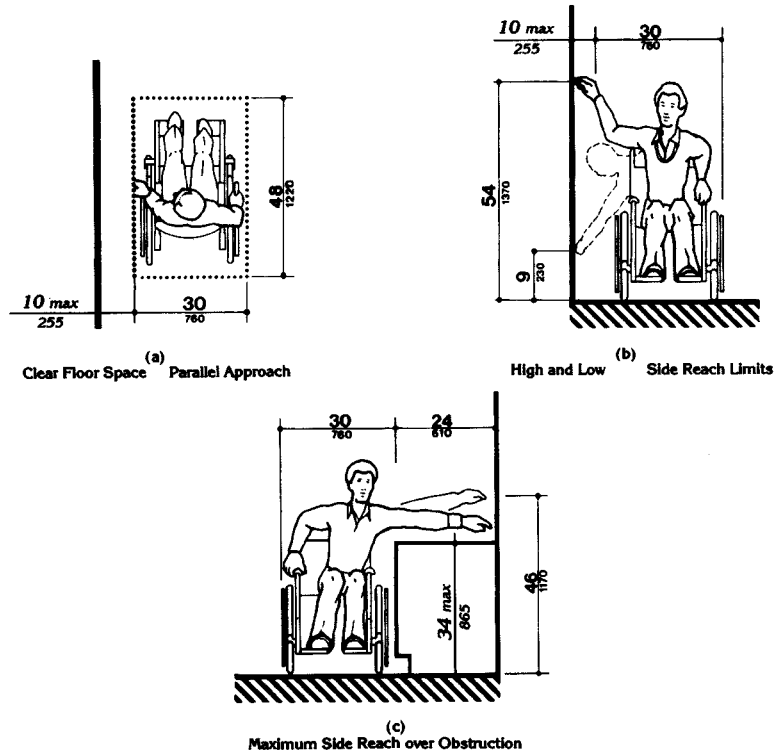

Fig. 6
Side Reach

4.3.7 Slope. An accessible route with a running slope greater than 1:20 is a ramp and shall comply with 4.8. Nowhere shall the cross slope of an accessible route exceed 1:50.

4.3.8 Changes in Levels. Changes in levels along an accessible route shall comply with 4.5.2. If an accessible route has changes in level greater than 1/2 in (13 mm), then a curb ramp, ramp, elevator, or platform lift *(as permitted in 4.1.3 and 4.1.6)* shall be provided that complies with 4.7, 4.8, 4.10, or 4.11, respectively. An accessible route does not include stairs, steps, or escalators. See definition of "egress, means of" in 3.5.

4.3.9 Doors. Doors along an accessible route shall comply with 4.13.

4.3.10* Egress

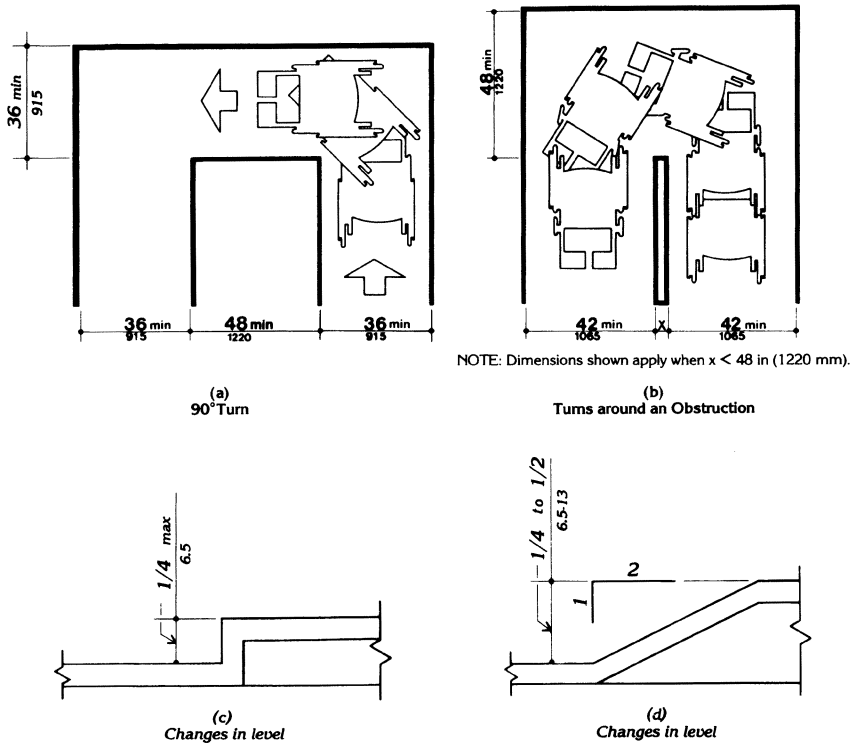

Fig. 7
Accessible Route

4.3.10* Egress. Accessible routes serving any accessible space or element shall also serve as a means of egress for emergencies or connect to an accessible area of *rescue assistance.*

4.3.11 Areas of Rescue Assistance.

4.3.11.1 Location and Construction. *An area of rescue assistance shall be one of the following:*

(1) A portion of a stairway landing within a smokeproof enclosure (complying with local requirements).

(2) A portion of an exterior exit balcony located immediately adjacent to an exit stairway when the balcony complies with local requirements for exterior exit balconies. Openings to the interior of the building located within 20 feet (6 m) of the

area of rescue assistance shall be protected with fire assemblies having a three-fourths hour fire protection rating.

(3) A portion of a one-hour fire-resistive corridor (complying with local requirements for fire-resistive construction and for openings) located immediately adjacent to an exit enclosure.

(4) A vestibule located immediately adjacent to an exit enclosure and constructed to the same fire-resistive standards as required for corridors and openings.

(5) A portion of a stairway landing within an exit enclosure which is vented to the exterior and is separated from the interior of the building with not less than one-hour fire-resistive doors.

(6) When approved by the appropriate local authority, an area or a room which is separated from other portions of the building by a smoke barrier. Smoke barriers shall have a fire-resistive rating of not less than one hour and shall completely enclose the area or room. Doors in the smoke barrier shall be tight-fitting smoke- and draft-control assemblies having a fire-protection rating of not less than 20 minutes and shall be self-closing or automatic closing. The area or room shall be provided with an exit directly to an exit enclosure. Where the room or area exits into an exit enclosure which is required to be of more than one-hour fire-resistive construction, the room or area shall have the same fire-resistive construction, including the same opening protection, as required for the adjacent exit enclosure.

(7) An elevator lobby when elevator shafts and adjacent lobbies are pressurized as required for smokeproof enclosures by local regulations and when complying with requirements herein for size, communication, and signage. Such pressurization system shall be activated by smoke detectors on each floor located in a manner approved by the appropriate local authority. Pressurization equipment and its duct work within the building shall be separated from other portions of the building by a minimum two-hour fire-resistive construction.

4.3.11.2 Size. *Each area of rescue assistance shall provide at least two accessible areas each being not less than 30 inches by 48 inches (760 mm by 1220 mm). The area of rescue assistance shall not encroach on any required exit width. The total number of such 30-inch by 48-inch (760 mm by 1220 mm) areas per story shall be not less than one for every 200 persons of calculated occupant load served by the area of rescue assistance.*

EXCEPTION: The appropriate local authority may reduce the minimum number of 30-inch by 48-inch (760 mm by 1220 mm) areas to one for each area of rescue assistance on floors where the occupant load is less than 200.

4.3.11.3* Stairway Width. *Each stairway adjacent to an area of rescue assistance shall have a minimum clear width of 48 inches between handrails.*

4.3.11.4* Two-way Communication. *A method of two-way communication, with both visible and audible signals, shall be provided between each area of rescue assistance and the primary entry. The fire department or appropriate local authority may approve a location other than the primary entry.*

4.3.11.5 Identification. *Each area of rescue assistance shall be identified by a sign which states "AREA OF RESCUE ASSISTANCE" and displays the international symbol of accessibility. The sign shall be illuminated when exit sign illumination is required. Signage shall also be installed at all inaccessible exits and where otherwise necessary to clearly indicate the direction to areas of rescue assistance. In each area of rescue assistance, instructions on the use of the area under emergency conditions shall be posted adjoining the two-way communication system.*

4.4 Protruding Objects.

4.4.1* General. Objects projecting from walls (for example, telephones) with their leading edges between 27 in and 80 in (685 mm and 2030 mm) above the finished floor shall protrude no more than 4 in (100 mm) into walks, halls, corridors, passageways, or aisles (see Fig. 8(a)). Objects mounted with their leading edges at or below 27 in (685 mm) above the finished floor may protrude any amount (see Fig. 8(a) and (b)). Free-standing objects mounted on posts or pylons may overhang 12 in (305 mm) maximum from 27 in to 80 in (685 mm to 2030 mm) above the ground or

4.4 Protruding Objects

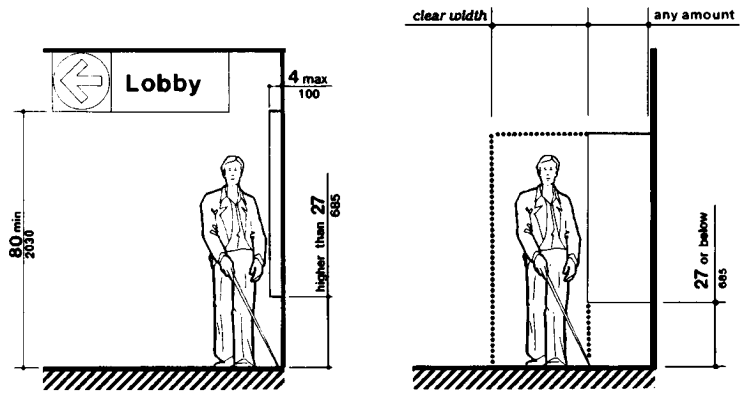

Fig. 8 (a)
Walking Parallel to a Wall

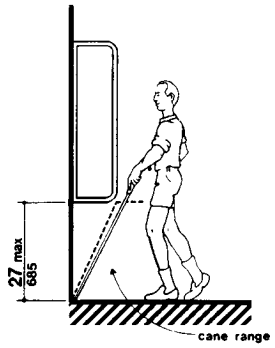

Fig. 8 (b)
Walking Perpendicular to a Wall

Fig. 8
Protruding Objects

finished floor (see Fig. 8(c) and (d)). Protruding objects shall not reduce the clear width of an accessible route or maneuvering space (see Fig. 8(e)).

4.4.2 Head Room. Walks, halls, corridors, passageways, aisles, or other circulation spaces shall have 80 in (2030 mm) minimum clear head room (see Fig. 8(a)). *If vertical clearance of an area adjoining an accessible route is reduced to less than 80 in (nominal dimension), a barrier to warn blind or visually-impaired persons shall be provided (see Fig. 8(c-1)).*

4.5 Ground and Floor Surfaces.

4.5.1* General. Ground and floor surfaces along accessible routes and in accessible rooms and spaces including floors, walks, ramps, stairs, and curb ramps, shall be stable, firm, slip-resistant, and shall comply with 4.5.

4.5.2 Changes in Level. Changes in level up to 1/4 in (6 mm) may be vertical and without edge treatment *(see Fig. 7(c))*. Changes in level between 1/4 in and 1/2 in (6 mm and 13 mm)

4.4 Protruding Objects

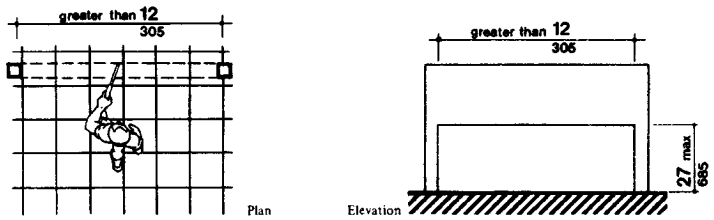

Fig. 8 (c) Free-Standing Overhanging Objects

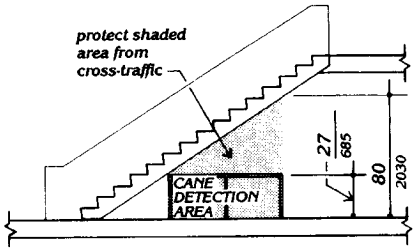

Fig. 8 (c-1) Overhead Hazards

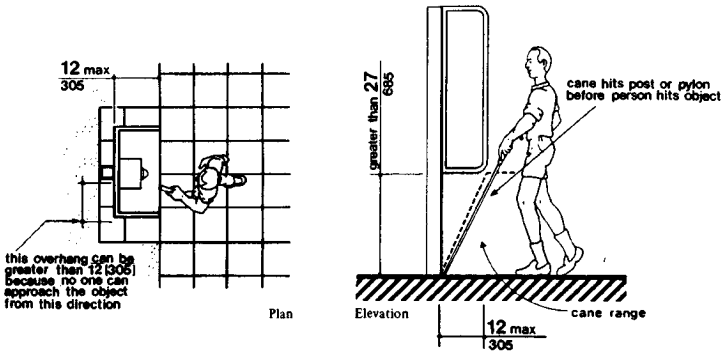

Fig. 8 (d)
Objects Mounted on Posts or Pylons

Fig. 8
Protruding Objects *(Continued)*

4.5 Ground and Floor Surfaces

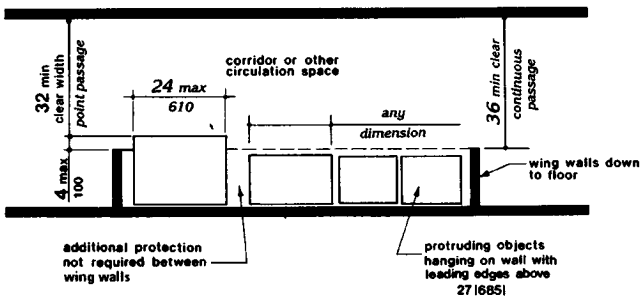

Fig. 8 (e)
Example of Protection around Wall-Mounted Objects and Measurements of Clear Widths

Fig. 8
Protruding Objects *(Continued)*

shall be beveled with a slope no greater than 1:2 *(see Fig. 7(d))*. Changes in level greater than 1/2 in (13 mm) shall be accomplished by means of a ramp that complies with 4.7 or 4.8.

4.5.3* Carpet. If carpet or carpet tile is used on a ground or floor surface, then it shall be securely attached; have a firm cushion, pad, or backing, or no cushion or pad; and have a level loop, textured loop, level cut pile, or level cut/uncut pile texture. The maximum pile *thickness* shall be 1/2 in (13 mm) (see Fig. 8(f)). Exposed edges of carpet shall be fastened to floor surfaces and have trim along the entire length of the exposed edge. Carpet edge trim shall comply with 4.5.2.

4.5.4 Gratings. If gratings are located in walking surfaces, then they shall have spaces no greater than 1/2 in (13 mm) wide in one direction *(see Fig. 8(g))*. If gratings have elongated openings, then they shall be placed so that the long dimension is perpendicular to the dominant direction of travel *(see Fig. 8(h))*.

4.6 Parking and Passenger Loading Zones.

4.6.1 Minimum Number. *Parking spaces required to be accessible by 4.1 shall comply with 4.6.2 through 4.6.5. Passenger loading zones required to be accessible by 4.1 shall comply with 4.6.5 and 4.6.6.*

4.6 Parking and Passenger Loading Zones

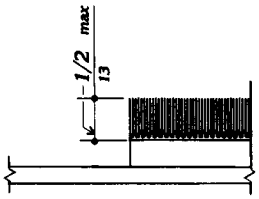

Fig. 8 (f)
Carpet Pile Thickness

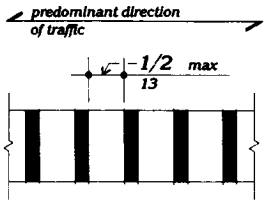

Fig. 8 (g)
Gratings

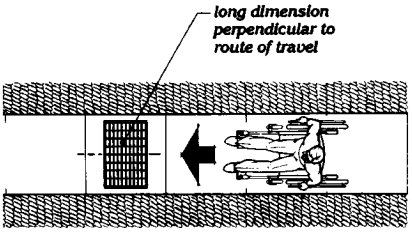

Fig. 8 (h)
Grating Orientation

4.6.2 Location. *Accessible parking spaces serving* a particular building shall be located on the shortest accessible route of travel *from adjacent parking* to an accessible entrance. *In parking facilities* that do not serve a particular building, *accessible parking* shall be located on the shortest accessible route *of travel* to an accessible pedestrian entrance of the parking facility. *In buildings with multiple accessible entrances with adjacent parking, accessible parking spaces shall be dispersed and located closest to the accessible entrances.*

4.6.3* Parking Spaces. *Accessible* parking spaces shall be at least 96 in (2440 mm) wide. Parking access aisles shall be part of an accessible route to the building or facility entrance and shall comply with 4.3. Two accessible parking spaces may share a common access aisle (see Fig. 9). Parked vehicle overhangs shall not reduce the clear width of an accessible route. *Parking spaces and access aisles shall be level with surface slopes not exceeding 1:50 (2%) in all directions.*

4.6.4* Signage. Accessible parking spaces shall be designated as reserved by a sign showing the symbol of accessibility (see 4.30.7). *Spaces complying with 4.1.2(5)(b) shall have an additional sign "Van-Accessible" mounted below the symbol of accessibility.* Such signs shall *be located so they cannot* be obscured by a vehicle parked in the space.

4.6.5* *Vertical Clearance.* *Provide minimum vertical clearance of 114 in (2895 mm) at accessible passenger loading zones and along at least one vehicle access route to such areas from site entrance(s) and exit(s). At parking spaces complying with 4.1.2(5)(b), provide minimum vertical clearance of 98 in (2490 mm) at the parking space and along at least one vehicle access route to such spaces from site entrance(s) and exit(s).*

4.6.6 Passenger Loading Zones. Passenger loading zones shall provide an access aisle at least *60* in *(1525 mm)* wide and 20 ft *(240 in) (6100 mm)* long adjacent and parallel to the vehicle pull-up space (see Fig. 10). If there are curbs between the access aisle and the vehicle pull-up space, then a curb ramp complying with 4.7 shall be provided. *Vehicle standing spaces and access aisles shall be level with*

4.7 Curb Ramps

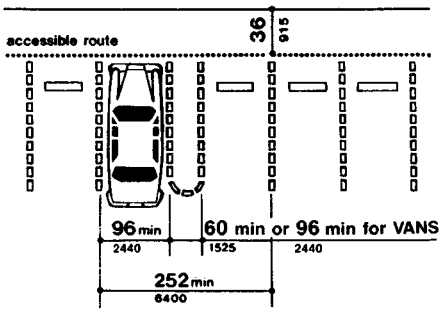

Fig. 9
Dimensions of Parking Spaces

surface slopes not exceeding 1:50 (2%) in all directions.

4.7 Curb Ramps.

4.7.1 Location. Curb ramps complying with 4.7 shall be provided wherever an accessible route crosses a curb.

4.7.2 Slope. Slopes of curb ramps shall comply with 4.8.2. The slope shall be measured as shown in Fig. 11. *Transitions from ramps to walks, gutters, or streets shall be flush and free of abrupt changes. Maximum slopes of adjoining gutters, road surface immediately adjacent to the curb ramp, or accessible route shall not exceed 1:20.*

4.7.3 Width. The minimum width of a curb ramp shall be 36 in (915 mm), exclusive of flared sides.

4.7.4 Surface. Surfaces of curb ramps shall comply with 4.5.

4.7.5 Sides of Curb Ramps. If a curb ramp is located where pedestrians must walk across the ramp, *or where it is not protected by handrails or guardrails,* it shall have flared sides; the maximum slope of the flare shall be 1:10 (see Fig. 12(a)). Curb ramps with returned curbs may be used where pedestrians would not normally walk across the ramp (see Fig. 12(b)).

4.7.6 Built-up Curb Ramps. Built-up curb ramps shall be located so that they do not project into vehicular traffic lanes (see Fig. 13).

4.7.7 *Detectable Warnings.* A curb ramp shall have a *detectable* warning complying with 4.29.2. *The detectable warning shall extend* the full width and depth of the curb ramp.

4.7.8 Obstructions. Curb ramps shall be located or protected to prevent their obstruction by parked vehicles.

4.7.9 Location at Marked Crossings. Curb ramps at marked crossings shall be wholly contained within the markings, excluding any flared sides (see Fig. 15).

4.7.10 Diagonal Curb Ramps. If diagonal (or corner type) curb ramps have returned curbs or other well-defined edges, such edges shall be parallel to the direction of pedestrian flow. The bottom of diagonal curb ramps shall have 48 in (1220 mm) minimum clear space as shown in Fig. 15(c) and (d). If diagonal curb ramps are provided at marked crossings, the 48 in (1220 mm) clear space shall be within the markings (see Fig. 15(c) and (d)). If diagonal curb ramps have flared sides, they shall also have at least a 24 in (610 mm) long segment of straight curb located on each side of the curb ramp and within the marked crossing (see Fig. 15(c)).

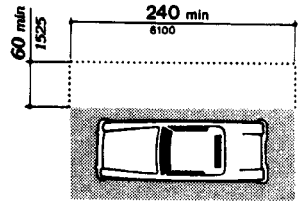

Fig. 10
Access Aisle at Passenger Loading Zones

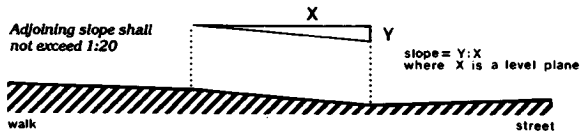

Fig. 11
Measurement of Curb Ramp Slopes

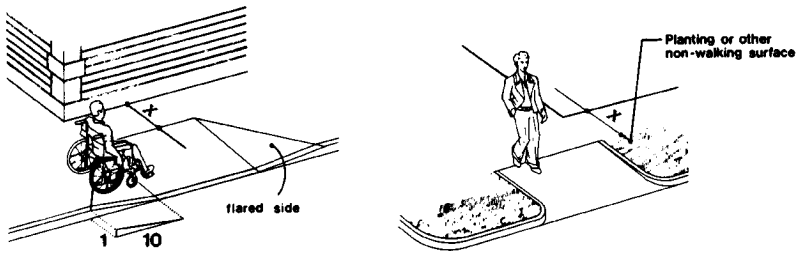

(a)
Flared Sides

(b)
Returned Curb

If X is less than 48 in, then the slope of the flared side shall not exceed 1:12.

Fig. 12
Sides of Curb Ramps

4.7.11 Islands. Any raised islands in crossings shall be cut through level with the street or have curb ramps at both sides and a level area at least 48 in (1220 mm) long between the curb ramps in the part of the island intersected by the crossings (see Fig. 15(a) and (b)).

4.8 Ramps.

4.8.1* General. Any part of an accessible route with a slope greater than 1:20 shall be considered a ramp and shall comply with 4.8.

4.8.2* Slope and Rise. The least possible slope shall be used for any ramp. The maximum slope of a ramp in new construction shall be 1:12. The maximum rise for any run shall be 30 in (760 mm) (see Fig. 16). Curb ramps and ramps to be constructed on existing sites or in existing buildings or facilities may have slopes and rises as *allowed in 4.1.6(3)(a)* if space limitations prohibit the use of a 1:12 slope or less.

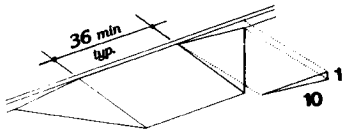

Fig. 13
Built-Up Curb Ramp

4.8 Ramps

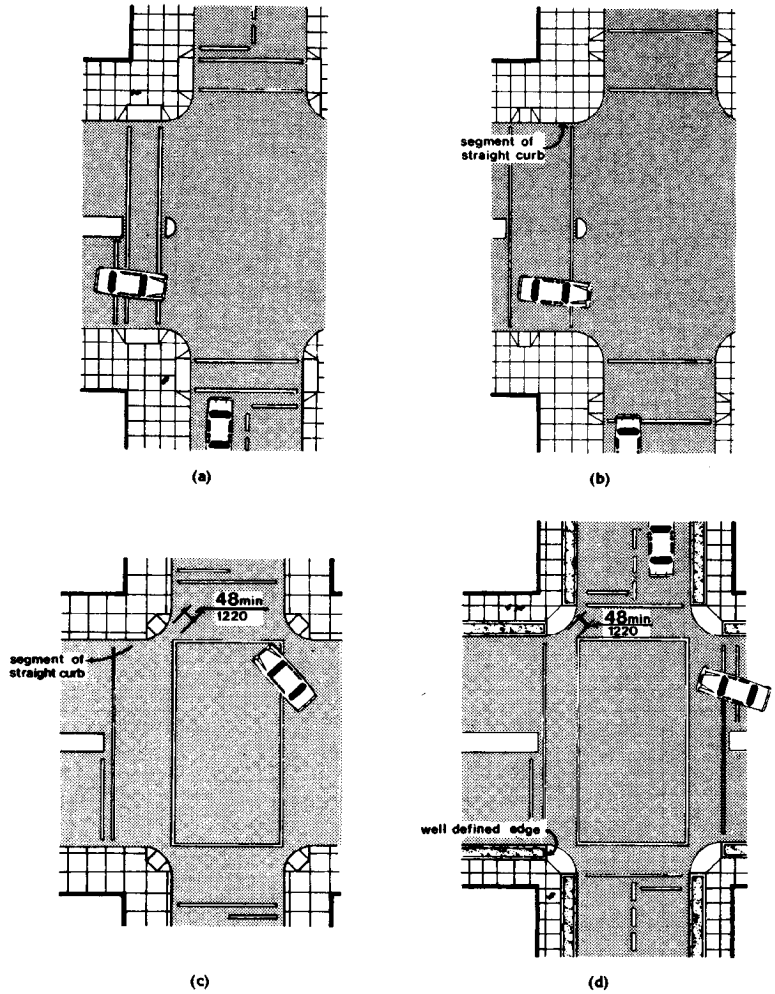

Fig. 15
Curb Ramps at Marked Crossings

28

4.8 Ramps

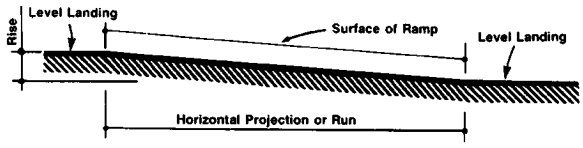

	Maximum Rise		Maximum Horizontal Projection	
Slope	in	mm	ft	m
1:12 to < 1:16	30	760	30	9
1:16 to < 1:20	30	760	40	12

Fig. 16
Components of a Single Ramp Run and Sample Ramp Dimensions

4.8.3 Clear Width. The minimum clear width of a ramp shall be 36 in (915 mm).

4.8.4* Landings. Ramps shall have level landings at bottom and top of *each ramp and* each *ramp* run. Landings shall have the following features:

(1) The landing shall be at least as wide as the ramp run leading to it.

(2) The landing length shall be a minimum of 60 in (1525 mm) clear.

(3) If ramps change direction at landings, the minimum landing size shall be 60 in by 60 in (1525 mm by 1525 mm).

(4) If a doorway is located at a landing, then the area in front of the doorway shall comply with 4.13.6.

4.8.5* Handrails. If a ramp run has a rise greater than 6 in (150 mm) or a horizontal projection greater than 72 in (1830 mm), then it shall have handrails on both sides. Handrails are not required on curb ramps *or adjacent to seating in assembly areas.* Handrails shall comply with 4.26 and shall have the following features:

(1) Handrails shall be provided along both sides of ramp segments. The inside handrail on switchback or dogleg ramps shall always be continuous.

(2) If handrails are not continuous, they shall extend at least 12 in (305 mm) beyond the top and bottom of the ramp segment and shall be parallel with the floor or ground surface (see Fig. 17).

(3) The clear space between the handrail and the wall shall be 1 - 1/2 in (38 mm).

(4) Gripping surfaces shall be continuous.

(5) Top of handrail gripping surfaces shall be mounted between 34 in and 38 in (865 mm and 965 mm) above ramp surfaces.

(6) Ends of handrails shall be either rounded or returned smoothly to floor, wall, or post.

(7) Handrails shall not rotate within their fittings.

4.8.6 Cross Slope and Surfaces. The cross slope of ramp surfaces shall be no greater than 1:50. Ramp surfaces shall comply with 4.5.

4.8.7 Edge Protection. Ramps and landings with drop-offs shall have curbs, walls, railings, or projecting surfaces that prevent people from slipping off the ramp. Curbs shall be a minimum of 2 in (50 mm) high (see Fig. 17).

4.8.8 Outdoor Conditions. Outdoor ramps and their approaches shall be designed so that water will not accumulate on walking surfaces.

4.9 Stairs.

4.9.1* Minimum Number. *Stairs required to be accessible by 4.1 shall comply with 4.9.*

4.9.2 Treads and Risers. On any given flight of stairs, all steps shall have uniform riser heights and uniform tread widths. Stair treads shall be no less than 11 in (280 mm) wide, measured from riser to riser (see Fig. 18(a)). *Open risers are not permitted.*

4.9.3 Nosings. The undersides of nosings shall not be abrupt. The radius of curvature at the leading edge of the tread shall be no greater than 1/2 in (13 mm). Risers shall be sloped or the underside of the nosing shall have an angle not less than 60 degrees from the horizontal. Nosings shall project no more than 1-1/2 in (38 mm) (see Fig. 18).

4.9.4 Handrails. Stairways shall have handrails at both sides of all stairs. Handrails shall comply with 4.26 and shall have the following features:

(1) Handrails shall be continuous along both sides of stairs. The inside handrail on switchback or dogleg stairs shall always be continuous (see Fig. 19(a) and (b)).

(2) If handrails are not continuous, they shall extend at least 12 in (305 mm) beyond the top riser and at least 12 in (305 mm) plus the width of one tread beyond the bottom riser. At the top, the extension shall be parallel with the floor or ground surface. At the bottom, the handrail shall continue to slope for a distance of the width of one tread from the bottom riser; the remainder of the extension shall be horizontal (see Fig. 19(c) and (d)). Handrail extensions shall comply with 4.4.

(3) The clear space between handrails and wall shall be 1-1/2 in (38 mm).

(4) Gripping surfaces shall be uninterrupted by newel posts, other construction elements, or obstructions.

(5) Top of handrail gripping surface shall be mounted between 34 in and 38 in (865 mm and 965 mm) above stair nosings.

(6) Ends of handrails shall be either rounded or returned smoothly to floor, wall or post.

(7) Handrails shall not rotate within their fittings.

4.9.5 *Detectable* Warnings at Stairs. *(Reserved).*

4.9.6 Outdoor Conditions. Outdoor stairs and their approaches shall be designed so that water will not accumulate on walking surfaces.

4.10 Elevators.

4.10.1 General. *Accessible* elevators shall be on an accessible route and shall comply with 4.10 and with the *ASME A17.1-1990*, Safety Code for Elevators and Escalators. *Freight elevators shall not be considered as meeting the requirements of this section unless the only elevators provided are used as combination passenger and freight elevators for the public and employees.*

4.10.2 Automatic Operation. Elevator operation shall be automatic. Each car shall be equipped with a self-leveling feature that will automatically bring the car to floor landings within a tolerance of 1/2 in (13 mm) under rated loading to zero loading conditions. This self-leveling feature shall be automatic and independent of the operating device and shall correct the overtravel or undertravel.

4.10.3 Hall Call Buttons. Call buttons in elevator lobbies and halls shall be centered at 42 in (1065 mm) above the floor. Such call buttons shall have visual signals to indicate when each call is registered and when each call is answered. Call buttons shall be a minimum of 3/4 in (19 mm) in the smallest dimension. The button designating the up direction shall be on top. (See Fig. 20.) *Buttons shall be raised or flush. Objects mounted beneath hall call buttons shall not project into the elevator lobby more than 4 in (100 mm).*

4.10 Elevators

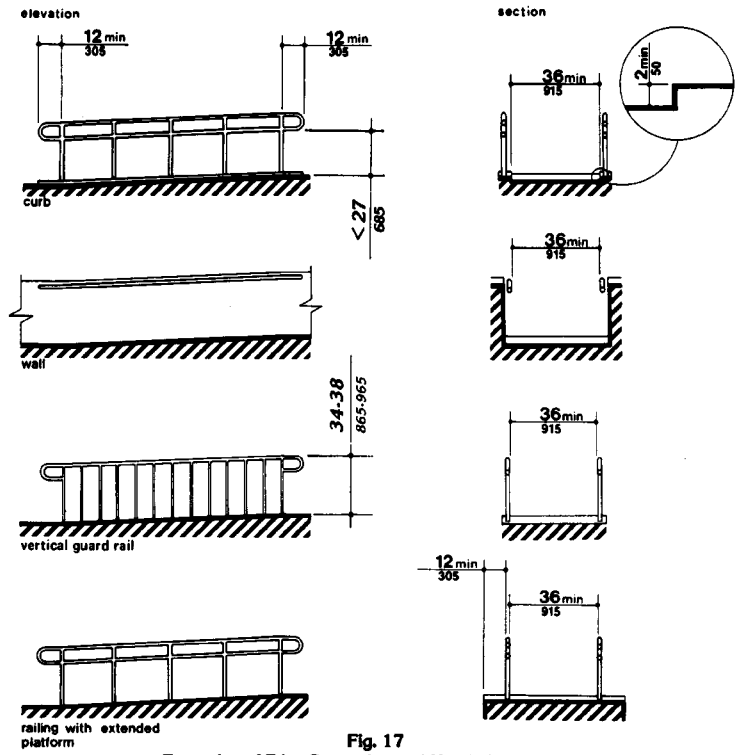

Fig. 17
Examples of Edge Protection and Handrail Extensions

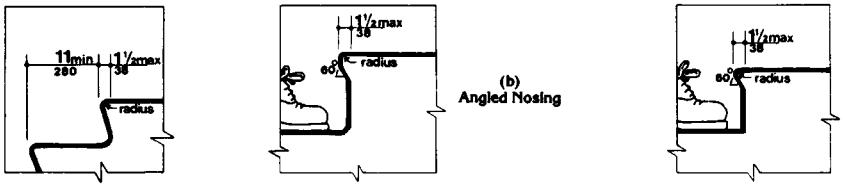

(a)
Flush Riser

(b)
Angled Nosing

(c)
Rounded Nosing

Fig. 18
Usable Tread Width and Examples of Acceptable Nosings

31

4.10 Elevators

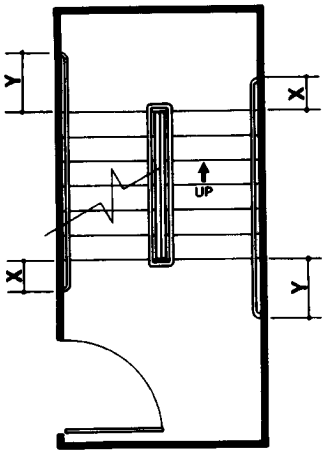

(a)
Plan

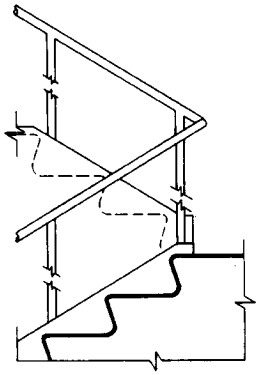

(b)
Elevation of Center Handrail

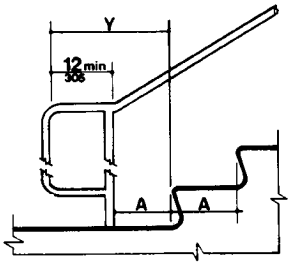

(c)
Extension at Bottom of Run

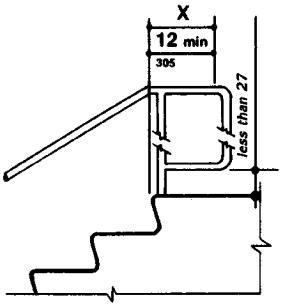

(d)
Extension at Top of Run

NOTE:
X is the 12 in minimum handrail extension required at each top riser.
Y is the minimum handrail extension of 12 in plus the width of one tread that is required at each bottom riser.

Fig. 19
Stair Handrails

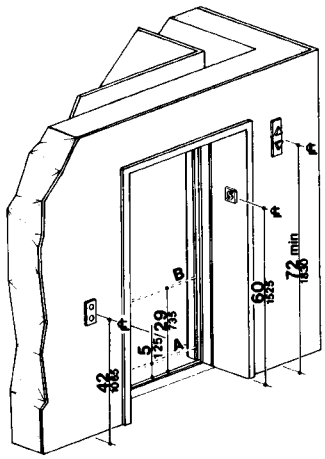

NOTE: The automatic door reopening device is activated if an object passes through either line A or line B. Line A and line B represent the vertical locations of the door reopening device not requiring contact.

Fig. 20
Hoistway and Elevator Entrances

4.10.4 Hall Lanterns. A visible and audible signal shall be provided at each hoistway entrance to indicate which car is answering a call. Audible signals shall sound once for the up direction and twice for the down direction or shall have verbal annunciators that say "up" or "down." Visible signals shall have the following features:

(1) Hall lantern fixtures shall be mounted so that their centerline is at least 72 in (1830 mm) above the lobby floor. (See Fig. 20.)

(2) Visual elements shall be at least 2-1/2 in (64 mm) in the smallest dimension.

(3) Signals shall be visible from the vicinity of the hall call button (see Fig. 20). In-car lanterns located in cars, visible from the vicinity of hall call buttons, and conforming to the above requirements, shall be acceptable.

4.10.5 *Raised and Braille* Characters on Hoistway Entrances. All elevator hoistway entrances shall have *raised and Braille* floor designations provided on both jambs. The centerline of the characters shall be 60 in (1525 mm) *above finish* floor. Such characters shall be 2 in (50 mm) high and shall comply with 4.30.4. Permanently applied plates are acceptable if they are permanently fixed to the jambs. (See Fig. 20).

4.10.6* Door Protective and Reopening Device. Elevator doors shall open and close automatically. They shall be provided with a reopening device that will stop and reopen a car door and hoistway door automatically if the door becomes obstructed by an object or person. The device shall be capable of completing these operations without requiring contact for an obstruction passing through the opening at heights of 5 in and 29 in (125 mm and 735 mm) above finish floor (see Fig. 20). Door reopening devices shall remain effective for at least 20 seconds. After such an interval, doors may close in accordance with the requirements of *ASME A17.1-1990.*

4.10.7* Door and Signal Timing for Hall Calls. The minimum acceptable time from notification that a car is answering a call until the doors of that car start to close shall be calculated from the following equation:

$$T = D/(1.5\ \text{ft/s}) \text{ or } T = D/(445\ \text{mm/s})$$

where T total time in seconds and D distance (in feet or millimeters) from a point in the lobby or corridor 60 in (1525 mm) directly in front of the farthest call button controlling that car to the centerline of its hoistway door (see Fig. 21). For cars with in-car lanterns, T begins when the lantern is visible from the vicinity of hall call buttons and an audible signal is sounded. *The minimum acceptable notification time shall be 5 seconds.*

4.10.8 Door Delay for Car Calls. The minimum time for elevator doors to remain fully open in response to a car call shall be 3 seconds.

4.10.9 Floor Plan of Elevator Cars. The floor area of elevator cars shall provide space for wheelchair users to enter the car, maneuver

4.10.12 Car Controls

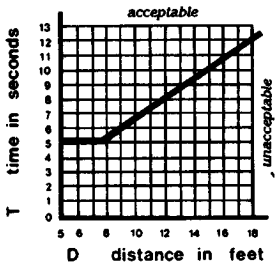

Fig. 21
Graph of Timing Equation

within reach of controls, and exit from the car. Acceptable door opening and inside dimensions shall be as shown in Fig. 22. The clearance between the car platform sill and the edge of any hoistway landing shall be no greater than 1-1/4 in (32 mm).

4.10.10 Floor Surfaces. Floor surfaces shall comply with 4.5.

4.10.11 Illumination Levels. The level of illumination at the car controls, platform, and car threshold and landing sill shall be at least 5 footcandles (53.8 lux).

4.10.12* Car Controls. Elevator control panels shall have the following features:

(1) Buttons. All control buttons shall be at least 3/4 in (19 mm) in their smallest dimension. They *shall* be *raised* or flush.

(2) Tactile, *Braille*, and Visual Control Indicators. All control buttons shall be designated by *Braille and by raised* standard alphabet characters for letters, arabic characters for numerals, or standard symbols as shown in Fig. 23(a), and as required in *ASME A17.1-1990. Raised and Braille* characters and symbols shall comply with 4.30. The call button for the main entry floor shall be designated by a *raised* star at the left of the floor designation (see Fig. 23(a)). All raised designations for control buttons shall be placed immediately to the left of the button to which they apply. Applied plates,

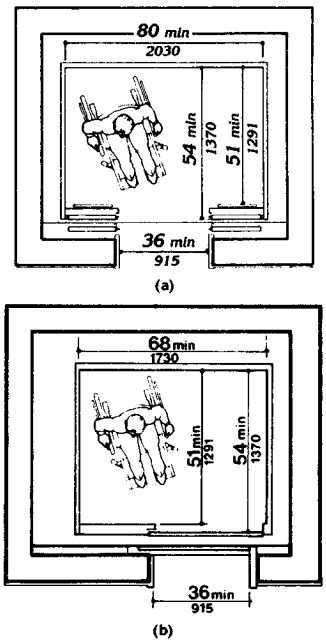

Fig. 22
Minimum Dimensions of Elevator Cars

permanently attached, are an acceptable means to provide raised control designations. Floor buttons shall be provided with visual indicators to show when each call is registered. The visual indicators shall be extinguished when each call is answered.

(3) Height. All floor buttons shall be no higher than 54 in (1370 mm) above the *finish* floor *for side approach and 48 in (1220 mm) for front approach.* Emergency controls, including the emergency alarm and emergency stop, shall be grouped at the bottom of the panel and shall have their centerlines no less than 35 in (890 mm) above the finish floor (see Fig. 23(a) and (b)).

4.10.13* Car Position Indicators

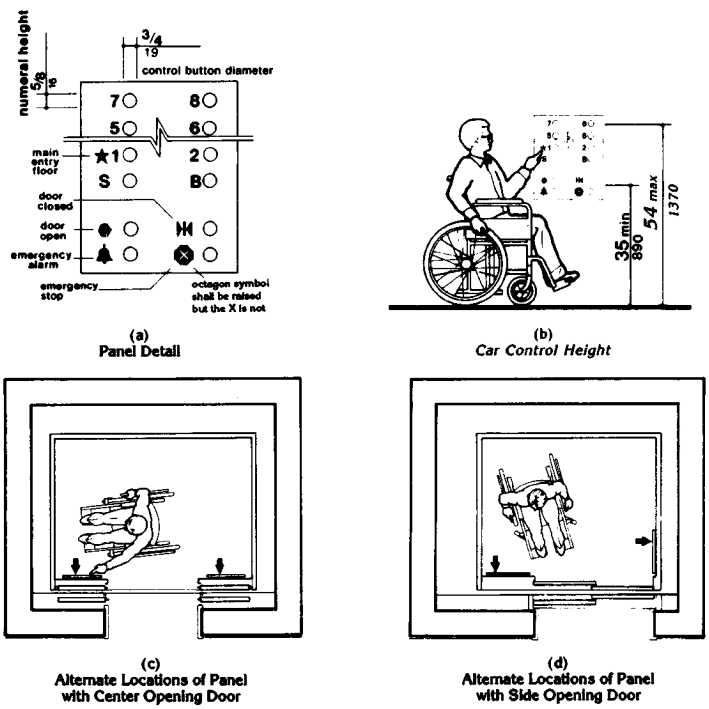

(a)
Panel Detail

(b)
Car Control Height

(c)
Alternate Locations of Panel with Center Opening Door

(d)
Alternate Locations of Panel with Side Opening Door

Fig. 23
Car Controls

(4) Location. Controls shall be located on a front wall if cars have center opening doors, and at the side wall or at the front wall next to the door if cars have side opening doors (see Fig. 23(c) and (d)).

4.10.13* Car Position Indicators. In elevator cars, a visual car position indicator shall be provided above the car control panel or over the door to show the position of the elevator in the hoistway. As the car passes or stops at a floor served by the elevators, the corresponding numerals shall illuminate, and an audible signal shall sound. Numerals shall be a minimum of 1/2 in (13 mm) high. The audible signal shall be no less than 20 decibels with a frequency no higher than 1500 Hz. An automatic verbal announcement of the floor number at which a car stops or which a car passes may be substituted for the audible signal.

4.10.14* Emergency Communications. If provided, emergency two-way communication systems between the elevator and a point outside the hoistway shall comply with *ASME*

A17.1-1990. The highest operable part of a two-way communication system shall be a maximum of *48 in (1220 mm)* from the floor of the car. It shall be identified by a raised symbol and lettering complying with 4.30 and located adjacent to the device. If the system uses a handset then the length of the cord from the panel to the handset shall be at least 29 in (735 mm). *If the system is located in a closed compartment the compartment door hardware shall conform to 4.27, Controls and Operating Mechanisms. The emergency intercommunication system shall not require voice communication.*

4.11 Platform Lifts *(Wheelchair Lifts).*

4.11.1 Location. *Platform lifts (wheelchair lifts) permitted by 4.1 shall comply with the requirements of 4.11.*

4.11.2* Other Requirements. If platform lifts *(wheelchair lifts)* are used, they shall comply with 4.2.4, 4.5, 4.27, and *ASME A17.1 Safety Code for Elevators and Escalators, Section XX, 1990.*

4.11.3 Entrance. *If platform lifts are used then they shall facilitate unassisted entry, operation, and exit from the lift in compliance with 4.11.2.*

4.12 Windows.

4.12.1* General. *(Reserved).*

4.12.2* Window Hardware. *(Reserved).*

4.13 Doors.

4.13.1 General. *Doors required to be accessible by 4.1* shall comply with the requirements of 4.13.

4.13.2 Revolving Doors and Turnstiles. Revolving doors or turnstiles shall not be the only means of passage at an accessible entrance or along an accessible route. *An accessible gate or door shall be provided adjacent to the turnstile or revolving door and shall be so designed as to facilitate the same use pattern.*

4.13.3 Gates. Gates, including ticket gates, shall meet all applicable specifications of 4.13.

4.13.4 Double-Leaf Doorways. If doorways have two *independently operated* door leaves, then at least one leaf shall meet the specifications in 4.13.5 and 4.13.6. That leaf shall be an active leaf.

4.13.5 Clear Width. Doorways shall have a minimum clear opening of 32 in (815 mm) with the door open 90 degrees, measured between the face of the door and the *opposite* stop (see Fig. 24(a), (b), (c), and (d)). Openings more than 24 in (610 mm) in depth shall comply with 4.2.1 and 4.3.3 (see Fig. 24(e)).

EXCEPTION: Doors not requiring full user passage, such as shallow closets, may have the clear opening reduced to 20 in (510 mm) minimum.

4.13.6 Maneuvering Clearances at Doors. Minimum maneuvering clearances at doors that are not automatic or power-assisted shall be as shown in Fig. 25. The floor or ground area within the required clearances shall be level and clear.

EXCEPTION: Entry doors to acute care hospital bedrooms for in-patients shall be exempted from the requirement for space at the latch side of the door (see dimension "x" in Fig. 25) if the door is at least 44 in (1120 mm) wide.

4.13.7 Two Doors in Series. The minimum space between two hinged or pivoted doors in series shall be 48 in (1220 mm) plus the width of any door swinging into the space. Doors in series shall swing either in the same direction or away from the space between the doors (see Fig. 26).

4.13.8* Thresholds at Doorways. Thresholds at doorways shall not exceed 3/4 in (19 mm) in height for exterior sliding doors or 1/2 in (13 mm) for other types of doors. Raised thresholds and floor level changes at accessible doorways shall be beveled with a slope no greater than 1:2 (see 4.5.2).

4.13.9* Door Hardware. Handles, pulls, latches, locks, and other operating devices on accessible doors shall have a shape that is easy

4.13 Doors

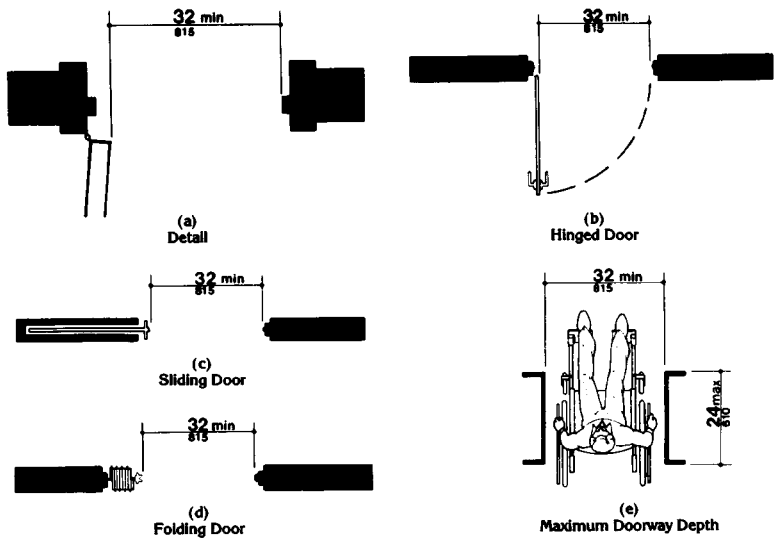

Fig. 24
Clear Doorway Width and Depth

to grasp with one hand and does not require tight grasping, tight pinching, or twisting of the wrist to operate. Lever-operated mechanisms, push-type mechanisms, and U-shaped handles are acceptable designs. When sliding doors are fully open, operating hardware shall be exposed and usable from both sides. *Hardware required for accessible door passage shall be mounted no higher than 48 in (1220 mm) above finished floor.*

4.13.10* Door Closers. If a door has a closer, then the sweep period of the closer shall be adjusted so that from an open position of 70 degrees, the door will take at least 3 seconds to move to a point 3 in (75 mm) from the latch, measured to the leading edge of the door.

4.13.11* Door Opening Force. The maximum force for pushing or pulling open a door shall be as follows:

(1) Fire doors shall have the minimum opening force allowable by the appropriate administrative authority.

(2) Other doors.

(a) exterior hinged doors: *(Reserved).*

(b) interior hinged doors: 5 lbf (22.2N)

(c) sliding or folding doors: 5 lbf (22.2N)

These forces do not apply to the force required to retract latch bolts or disengage other devices that may hold the door in a closed position.

4.13 Doors

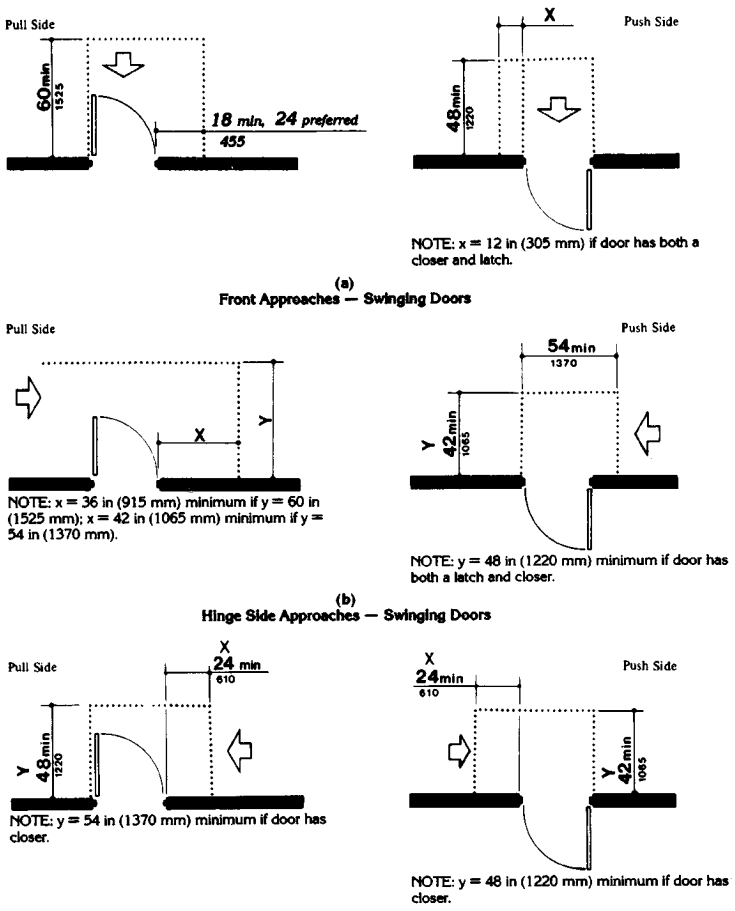

NOTE: All doors in alcoves shall comply with the clearances for front approaches.

Fig. 25
Maneuvering Clearances at Doors

4.13 Doors

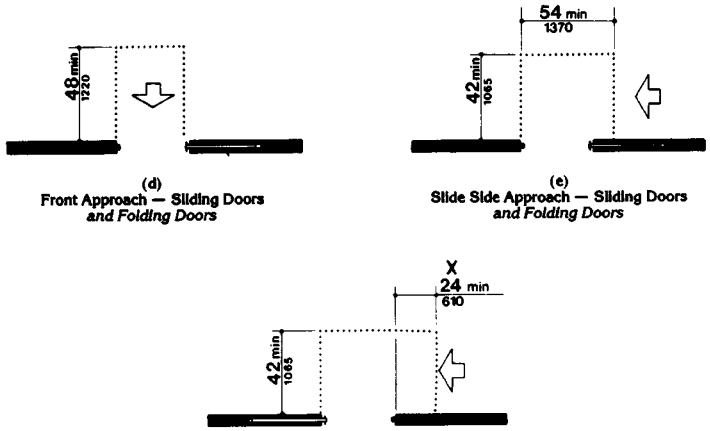

(d)
Front Approach — Sliding Doors *and Folding Doors*

(e)
Slide Side Approach — Sliding Doors *and Folding Doors*

(f)
Latch Side Approach — Sliding Doors *and Folding Doors*

NOTE: All doors in alcoves shall comply with the clearances for front approaches.

Fig. 25
Maneuvering Clearances at Doors *(Continued)*

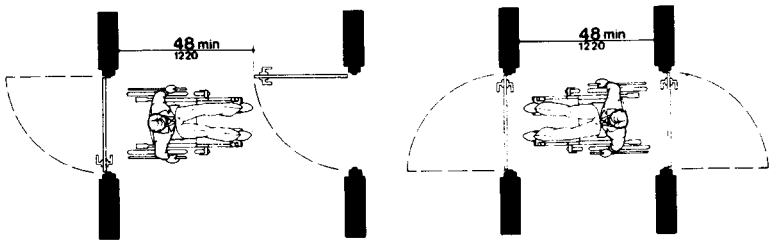

Fig. 26
Two Hinged Doors in Series

4.13.12* Automatic Doors and Power-Assisted Doors. If an automatic door is used, then it shall comply with *ANSI/BHMA A156.10-1985*. Slowly opening, low-powered, automatic doors shall *comply with ANSI A156.19-1984*. Such doors shall not open to back check faster than 3 seconds and shall require no more than 15 lbf (66.6N) to stop door movement. If a power-assisted door is used, its door-opening force shall comply with 4.13.11 and its closing shall conform to the requirements in *ANSI A156.19-1984*.

4.14 Entrances.

4.14.1 Minimum Number. *Entrances required to be accessible by 4.1* shall be part of an accessible route complying with 4.3. Such entrances shall be connected by an accessible route to public transportation stops, to accessible parking and passenger loading zones, and to public streets or sidewalks if available (see 4.3.2(1)). They shall also be connected by an accessible route to all accessible spaces or elements within the building or facility.

4.14.2 Service Entrances. A service entrance shall not be the sole accessible entrance unless it is the only entrance to a building or facility (for example, in a factory or garage).

4.15 Drinking Fountains and Water Coolers.

4.15.1 Minimum Number. *Drinking fountains or water coolers required to be accessible by 4.1* shall comply with 4.15.

4.15.2* Spout Height. Spouts shall be no higher than 36 in (915 mm), measured from the floor or ground surfaces to the spout outlet (see Fig. 27(a)).

4.15.3 Spout Location. The spouts of drinking fountains and water coolers shall be at the front of the unit and shall direct the water flow in a trajectory that is parallel or nearly parallel to the front of the unit. The spout shall provide a flow of water at least 4 in (100 mm) high so as to allow the insertion of a cup or glass under the flow of water. *On an accessible drinking fountain with a round or oval bowl, the spout must be positioned so the flow of water is within 3 in (75 mm) of the front edge of the fountain.*

4.15.4 Controls. Controls shall comply with 4.27.4. *Unit controls shall be front mounted or side mounted near the front edge.*

4.15.5 Clearances.

(1) Wall- and post-mounted cantilevered units shall have a clear knee space between the bottom of the apron and the floor or ground at least 27 in (685 mm) high, 30 in (760 mm) wide, and 17 in to 19 in (430 mm to 485 mm) deep (see Fig. 27(a) and (b)). Such units shall also have a minimum clear floor space 30 in by 48 in (760 mm by 1220 mm) to allow a person in a wheelchair to approach the unit facing forward.

(2) Free-standing or built-in units not having a clear space under them shall have a clear floor space at least 30 in by 48 in (760 mm by 1220 mm) that allows a person in a wheelchair to make a parallel approach to the unit (see Fig. 27(c) and (d)). This clear floor space shall comply with 4.2.4.

4.16 Water Closets.

4.16.1 General. Accessible water closets shall comply with 4.16.

4.16.2 Clear Floor Space. Clear floor space for water closets not in stalls shall comply with Fig. 28. Clear floor space may be arranged to allow either a left-handed or right-handed approach.

4.16.3* Height. The height of water closets shall be 17 in to 19 in (430 mm to 485 mm), measured to the top of the toilet seat (see Fig. 29(b)). *Seats shall not be sprung to return to a lifted position.*

4.16.4* Grab Bars. Grab bars for water closets not located in stalls shall comply with 4.26 and Fig. 29. *The grab bar behind the water closet shall be 36 in (915 mm) minimum.*

4.16.5* Flush Controls. Flush controls shall be hand operated *or automatic* and shall comply with 4.27.4. Controls for flush valves

shall be mounted on the wide side of toilet areas no more than 44 in (1120 mm) above the floor.

4.16.6 Dispensers. Toilet paper dispensers shall be installed within reach, as shown in Fig. 29(b). *Dispensers that control delivery, or that do not permit continuous paper flow, shall not be used.*

4.17 Toilet Stalls.

4.17.1 Location. Accessible toilet stalls shall be on an accessible route and shall meet the requirements of 4.17.

4.17.2 Water Closets. Water closets in accessible stalls shall comply with 4.16.

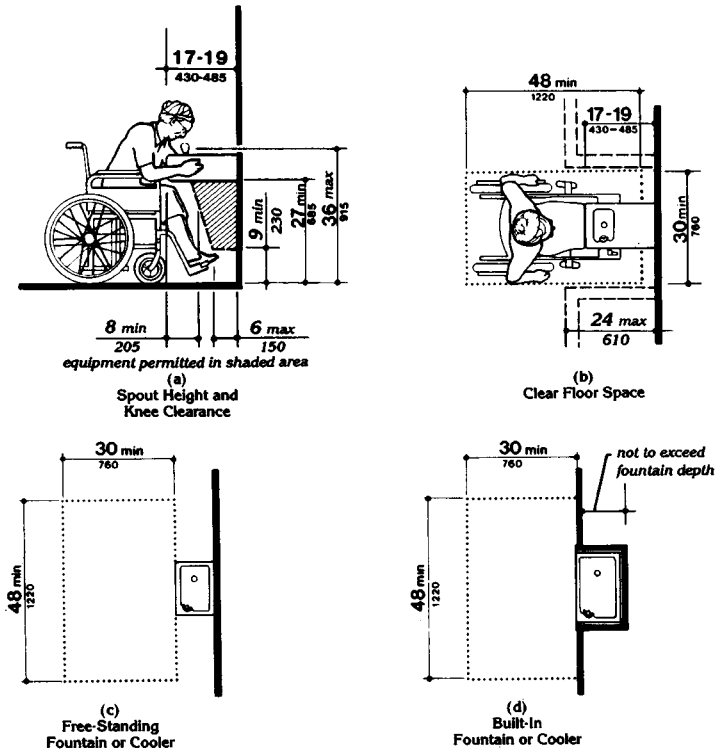

Fig. 27
Drinking Fountains and Water Coolers

4.17 Toilet Stalls

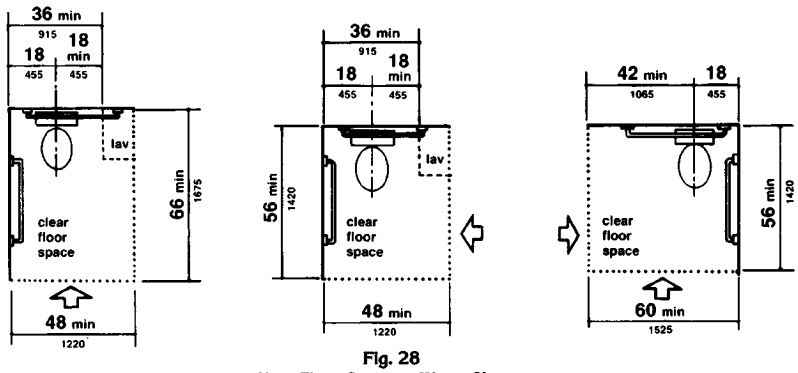

Fig. 28
Clear Floor Space at Water Closets

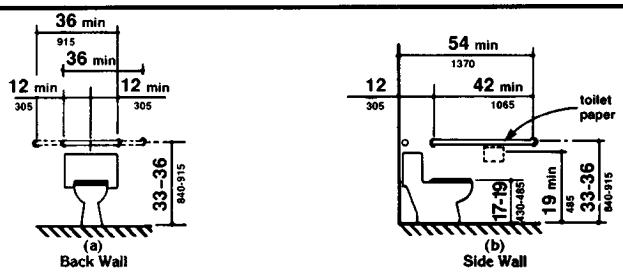

Fig. 29
Grab Bars at Water Closets

4.17.3* Size and Arrangement. The size and arrangement of the standard toilet stall shall comply with Fig. 30(a), *Standard Stall.* Standard toilet stalls with a minimum depth of 56 in (1420 mm) (see Fig. 30(a)) shall have wall-mounted water closets. If the depth of a standard toilet stall is increased at least 3 in (75 mm), then a floor-mounted water closet may be used. Arrangements shown for standard toilet stalls may be reversed to allow either a left- or right-hand approach. Additional stalls shall be provided in conformance with 4.22.4.

EXCEPTION: In instances of alteration work where provision of a standard stall (Fig. 30(a)) is technically infeasible or where plumbing code requirements prevent combining existing stalls to provide space, either alternate stall (Fig. 30(b)) may be provided in lieu of the standard stall.

4.17.4 Toe Clearances. In standard stalls, the front partition and at least one side partition shall provide a toe clearance of at least 9 in (230 mm) above the floor. If the depth of the stall is greater than 60 in (1525 mm), then the toe clearance is not required.

4.17.5* Doors. Toilet stall doors, *including door hardware,* shall comply with 4.13. *If toilet stall approach is from the latch side of the stall door, clearance between the door side of the*

4.17 Toilet Stalls

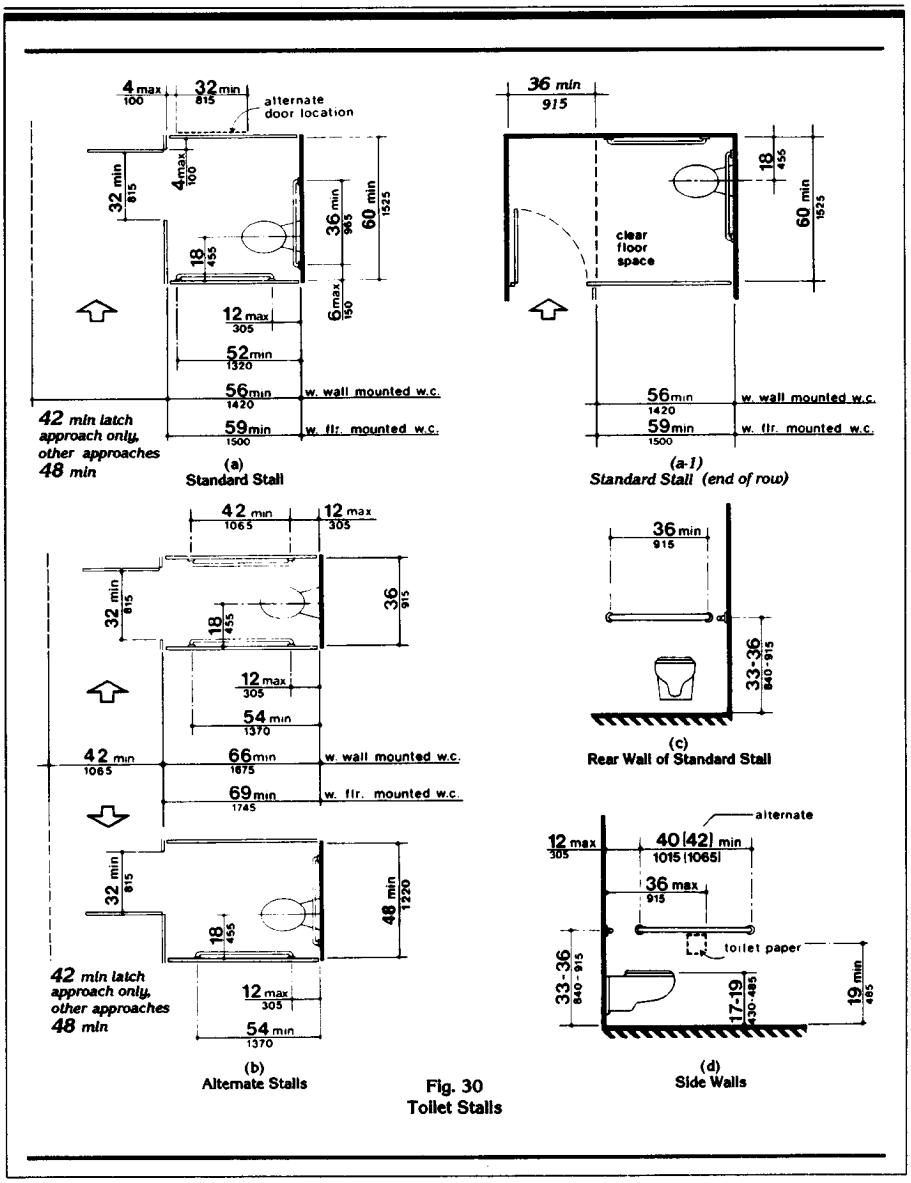

Fig. 30
Toilet Stalls

43

4.19 Lavatories and Mirrors

stall and any obstruction may be reduced to a minimum of 42 in (1065 mm) (Fig. 30).

4.17.6 Grab Bars. Grab bars complying with the length and positioning shown in Fig. 30(a), (b), (c), and (d) shall be provided. Grab bars may be mounted with any desired method as long as they have a gripping surface at the locations shown and do not obstruct the required clear floor area. Grab bars shall comply with 4.26.

4.18 Urinals.

4.18.1 General. Accessible urinals shall comply with 4.18.

4.18.2 Height. Urinals shall be stall-type or wall-hung with an elongated rim at a maximum of 17 in (430 mm) above the finish floor.

4.18.3 Clear Floor Space. A clear floor space 30 in by 48 in (760 mm by 1220 mm) shall be provided in front of urinals to allow forward approach. This clear space shall adjoin or overlap an accessible route and shall comply with 4.2.4. *Urinal shields that do not extend beyond the front edge of the urinal rim may be provided with 29 in (735 mm) clearance between them.*

4.18.4 Flush Controls. Flush controls shall be hand operated or automatic, and shall comply with 4.27.4, and shall be mounted no more than 44 in (1120 mm) above the finish floor.

4.19 Lavatories and Mirrors.

4.19.1 General. The requirements of 4.19 shall apply to lavatory fixtures, vanities, and built-in lavatories.

4.19.2 Height and Clearances. Lavatories shall be mounted with *the rim or counter surface no higher than 34 in (865 mm) above the finish floor.* Provide a clearance of at least 29 in (735 mm) above the finish floor to the bottom of the apron. Knee and toe clearance shall comply with Fig. 31.

4.19.3 Clear Floor Space. A clear floor space 30 in by 48 in (760 mm by 1220 mm) complying with 4.2.4 shall be provided in front of a lavatory to allow forward approach. Such clear floor space shall adjoin or overlap an accessible route and shall extend a maximum of 19 in (485 mm) underneath the lavatory (see Fig. 32).

4.19.4 Exposed Pipes and Surfaces. Hot water and drain pipes under lavatories shall be insulated or otherwise *configured to protect against contact.* There shall be no sharp or abrasive surfaces under lavatories.

4.19.5 Faucets. Faucets shall comply with 4.27.4. Lever-operated, push-type, and electronically controlled mechanisms are examples of acceptable designs. *If* self-closing valves are

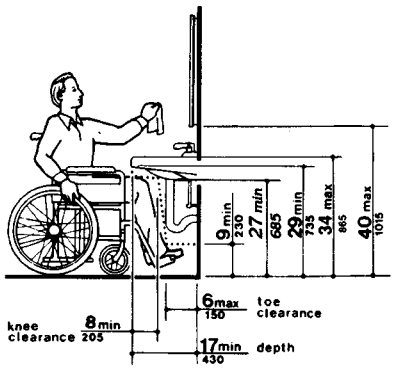

Fig. 31
Lavatory Clearances

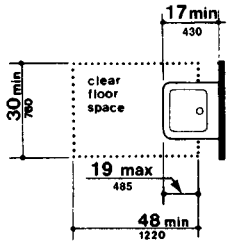

Fig. 32
Clear Floor Space at Lavatories

used the faucet *shall remain* open for at least 10 seconds.

4.19.6* Mirrors. Mirrors shall be mounted with the bottom edge *of the reflecting surface* no higher than 40 in (1015 mm) *above the finish* floor (see Fig. 31).

4.20 Bathtubs.

4.20.1 General. Accessible bathtubs shall comply with 4.20.

4.20.2 Floor Space. Clear floor space in front of bathtubs shall be as shown in Fig. 33.

4.20.3 Seat. An in-tub seat or a seat at the head end of the tub shall be provided as shown in Fig. 33 and 34. The structural strength of seats and their attachments shall comply with 4.26.3. Seats shall be mounted securely and shall not slip during use.

4.20.4 Grab Bars. Grab bars complying with 4.26 shall be provided as shown in Fig. 33 and 34.

4.20.5 Controls. Faucets and other controls complying with 4.27.4 shall be located as shown in Fig. 34.

4.20.6 Shower Unit. A shower spray unit with a hose at least 60 in (1525 mm) long that can be used *both* as a fixed shower head *and* as a hand-held shower shall be provided.

4.20.7 Bathtub Enclosures. If provided, enclosures for bathtubs shall not obstruct controls or transfer from wheelchairs onto bathtub seats or into tubs. Enclosures on bathtubs shall not have tracks mounted on their rims.

4.21 Shower Stalls.

4.21.1* General. Accessible shower stalls shall comply with 4.21.

4.21.2 Size and Clearances. Except as specified in 9.1.2, shower stall size and clear floor space shall comply with Fig. 35(a) or (b). The shower stall in Fig. 35(a) shall be 36 in by 36 in (915 mm by 915 mm). Shower stalls required by 9.1.2 shall comply with Fig. 57(a) or (b). The shower stall in Fig. 35(b) will fit into the space required for a bathtub.

4.21.3 Seat. A seat shall be provided in shower stalls 36 in by 36 in (915 mm by 915 mm) and shall be as shown in Fig. 36. The seat shall be mounted 17 in to 19 in (430 mm to 485 mm) from the bathroom floor and shall extend the full depth of the stall. In a 36 in by 36 in (915 mm by 915 mm) shower stall, the seat shall be on the wall opposite the controls. *Where a fixed seat is provided in a 30 in by 60 in minimum (760 mm by 1525 mm) shower stall, it shall be a folding type and shall be mounted on the wall adjacent to the controls as shown in Fig. 57.* The structural strength of seats and their attachments shall comply with 4.26.3.

4.21.4 Grab Bars. Grab bars complying with 4.26 shall be provided as shown in Fig. 37.

4.21.5 Controls. Faucets and other controls complying with 4.27.4 shall be located as shown in Fig. 37. In shower stalls 36 in by 36 in (915 mm by 915 mm), all controls, faucets, and the shower unit shall be mounted on the side wall opposite the seat.

4.21.6 Shower Unit. A shower spray unit with a hose at least 60 in (1525 mm) long that can be used *both* as a fixed shower head *and* as a hand-held shower shall be provided.

EXCEPTION: In unmonitored facilities where vandalism is a consideration, a fixed shower head mounted at 48 in (1220 mm) above the shower floor may be used in lieu of a hand-held shower head.

4.21.7 Curbs. If provided, curbs in shower stalls 36 in by 36 in (915 mm by 915 mm) shall be no higher than *1/2 in (13 mm).* Shower stalls that are 30 in by 60 in (760 mm by 1525 mm) minimum shall not have curbs.

4.21.8 Shower Enclosures. If provided, enclosures for shower stalls shall not obstruct controls or obstruct transfer from wheelchairs onto shower seats.

4.22 Toilet Rooms.

4.22.1 Minimum Number. *Toilet facilities required to be accessible by 4.1 shall comply*

4.21 Shower Stalls

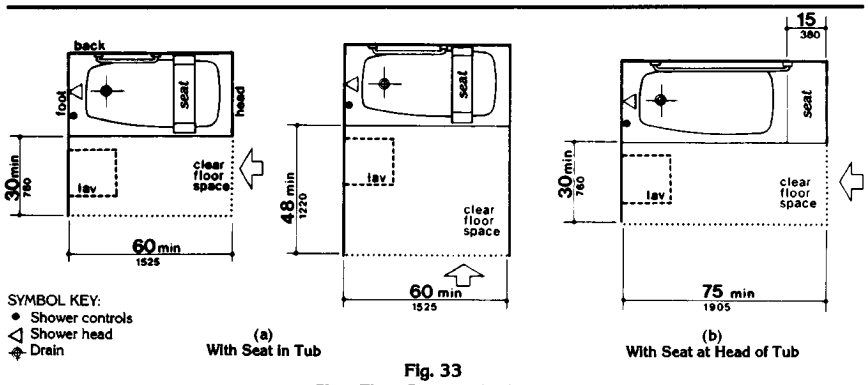

(a)
With Seat in Tub

(b)
With Seat at Head of Tub

Fig. 33
Clear Floor Space at Bathtubs

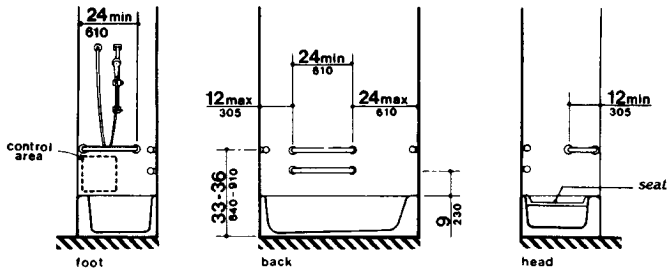

(a)
With Seat in Tub

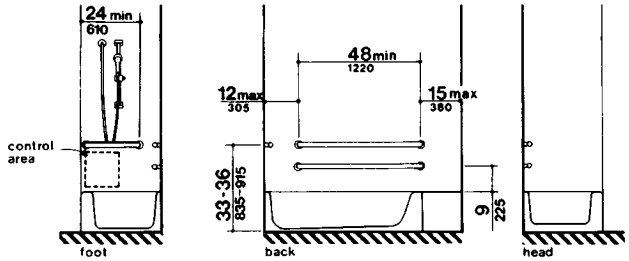

(b)
With Seat at Head of Tub

Fig. 34
Grab Bars at Bathtubs

4.22 Toilet Rooms

with 4.22. Accessible toilet rooms shall be on an accessible route.

4.22.2 Doors. All doors to accessible toilet rooms shall comply with 4.13. Doors shall not swing into the clear floor space required for any fixture.

4.22.3* Clear Floor Space. The accessible fixtures and controls required in 4.22.4, 4.22.5, 4.22.6, and 4.22.7 shall be on an accessible route. An unobstructed turning space complying with 4.2.3 shall be provided within an accessible toilet room. The clear floor space at fixtures and controls, the accessible route, and the turning space may overlap.

4.22.4 Water Closets. If toilet stalls are provided, then at least one shall be a standard toilet stall complying with 4.17; *where 6 or more stalls are provided, in addition to the stall complying with 4.17.3, at least one stall 36 in (915 mm) wide with an outward swinging, self-closing door and parallel grab bars complying with Fig. 30(d) and 4.26 shall be provided. Water closets in such stalls* shall comply with 4.16. If water closets are not in stalls, then at least one shall comply with 4.16.

4.22.5 Urinals. If urinals are provided, *then* at least one shall comply with 4.18.

4.22.6 Lavatories and Mirrors. If lavatories and mirrors are provided, *then* at least one of each shall comply with 4.19.

4.22.7 Controls and Dispensers. If controls, dispensers, receptacles, or other

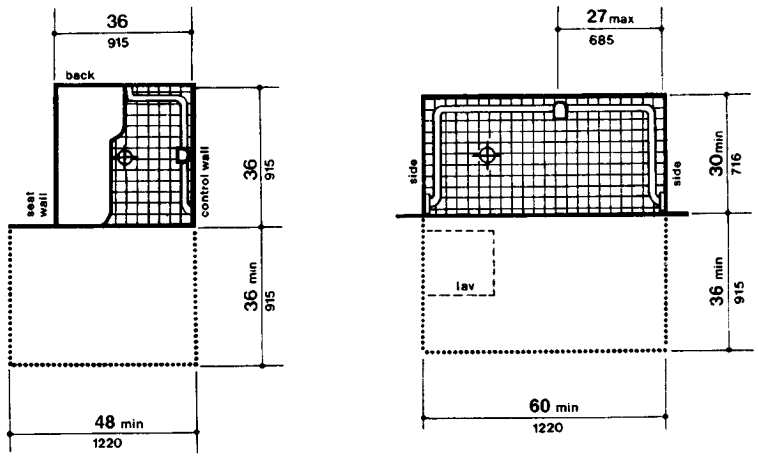

(a)
36-in by 36-in
(915-mm by 915-mm) Stall

(b)
30-in by 60-in
(760-mm by 1525-mm) Stall

Fig. 35
Shower Size and Clearances

4.23 Bathrooms, Bathing Facilities, and Shower Rooms

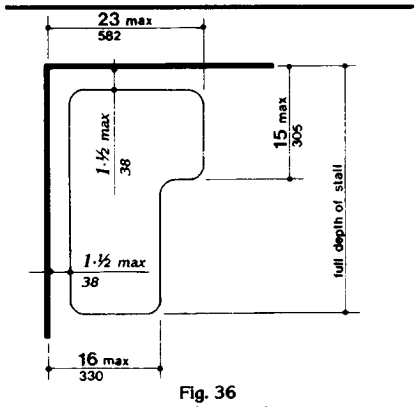

Fig. 36
Shower Seat Design

equipment are provided, *then* at least one of each shall be on an accessible route and shall comply with 4.27.

4.23 Bathrooms, Bathing Facilities, and Shower Rooms.

4.23.1 Minimum Number. Bathrooms, bathing facilities, or shower rooms *required to be accessible by 4.1* shall comply with 4.23 and shall be on an accessible route.

4.23.2 Doors. Doors to accessible bathrooms shall comply with 4.13. Doors shall not swing into the floor space required for any fixture.

4.23.3* Clear Floor Space. The accessible fixtures and controls required in 4.23.4, 4.23.5, 4.23.6, 4.23.7, 4.23.8, and 4.23.9 shall be on an accessible route. An unobstructed turning

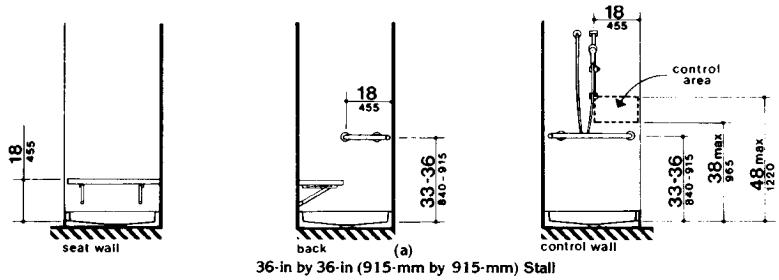

(a)
36-in by 36-in (915-mm by 915-mm) Stall

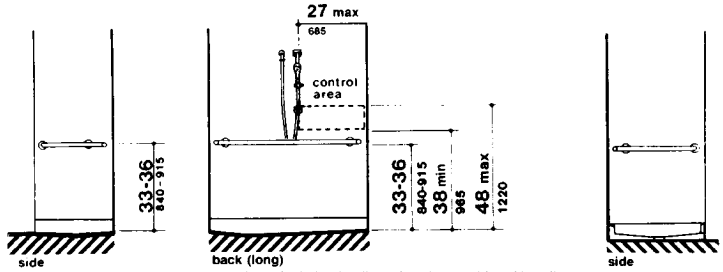

NOTE: Shower head and control area may be on back (long) wall (as shown) or on either side wall.

(b)
30-in by 60-in (760-mm by 1525-mm) Stall

Fig. 37
Grab Bars at Shower Stalls

space complying with 4.2.3 shall be provided within an accessible bathroom. The clear floor spaces at fixtures and controls, the accessible route, and the turning space may overlap.

4.23.4 Water Closets. If toilet stalls are provided, then at least one shall be a standard toilet stall complying with 4.17; *where 6 or more stalls are provided, in addition to the stall complying with 4.17.3, at least one stall 36 in (915 mm) wide with an outward swinging, self-closing door and parallel grab bars complying with Fig. 30(d) and 4.26 shall be provided. Water closets in such stalls* shall comply with 4.16. If water closets are not in stalls, then at least one shall comply with 4.16.

4.23.5 Urinals. If urinals are provided, then at least one shall comply with 4.18.

4.23.6 Lavatories and Mirrors. If lavatories and mirrors are provided, then at least one of each shall comply with 4.19.

4.23.7 Controls and Dispensers. If controls, dispensers, receptacles, or other equipment *are* provided, *then* at least one of each shall be on an accessible route and shall comply with 4.27.

4.23.8 Bathing and Shower Facilities. If tubs or showers are provided, then at least one accessible tub that complies with 4.20 or at least one accessible shower that complies with 4.21 shall be provided.

4.23.9* Medicine Cabinets. If medicine cabinets are provided, at least one shall be located with a usable shelf no higher than 44 in (1120 mm) above the floor space. The floor space shall comply with 4.2.4.

4.24 Sinks.

4.24.1 General. Sinks *required to be accessible by 4.1* shall comply with 4.24.

4.24.2 Height. Sinks shall be mounted with the counter or rim no higher than 34 in (865 mm) *above the finish* floor.

4.24.3 Knee Clearance. Knee clearance that is at least 27 in (685 mm) high, 30 in (760 mm) wide, and 19 in (485 mm) deep shall be provided underneath sinks.

4.24.4 Depth. Each sink shall be a maximum of 6-1/2 in (165 mm) deep.

4.24.5 Clear Floor Space. A clear floor space at least 30 in by 48 in (760 mm by 1220 mm) complying with 4.2.4 shall be provided in front of a sink to allow forward approach. The clear floor space shall be on an accessible route and shall extend a maximum of 19 in (485 mm) underneath the sink (see Fig. 32).

4.24.6 Exposed Pipes and Surfaces. Hot water and drain pipes exposed under sinks shall be insulated or otherwise *configured so as to protect against contact.* There shall be no sharp or abrasive surfaces under sinks.

4.24.7 Faucets. Faucets shall comply with 4.27.4. Lever-operated, push-type, touch-type, or electronically controlled mechanisms are acceptable designs.

4.25 Storage.

4.25.1 General. *Fixed* storage facilities such as cabinets, shelves, closets, and drawers *required to be accessible by 4.1* shall comply with 4.25.

4.25.2 Clear Floor Space. A clear floor space at least 30 in by 48 in (760 mm by 1220 mm) complying with 4.2.4 that allows either a forward or parallel approach by a person using a wheelchair shall be provided at accessible storage facilities.

4.25.3 Height. Accessible storage spaces shall be within at least one of the reach ranges specified in 4.2.5 and 4.2.6 *(see Fig. 5 and Fig. 6).* Clothes rods or shelves shall be a maximum of 54 in (1370 mm) *above the finish* floor *for a side approach. Where the distance from the wheelchair to the clothes rod or shelf exceeds 10 in (255 mm) (as in closets without accessible doors) the height and depth to the rod or shelf shall comply with Fig. 38(a) and Fig. 38(b).*

4.25.4 Hardware. Hardware for accessible storage facilities shall comply with 4.27.4. Touch latches and U-shaped pulls are acceptable.

4.26 Handrails, Grab Bars, and Tub and Shower Seats

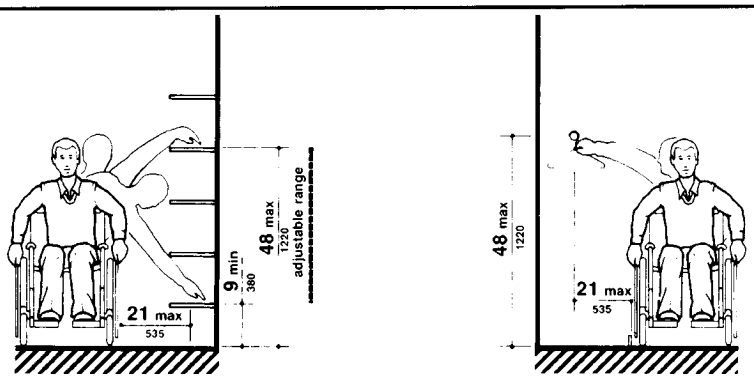

(a) Shelves *(b) Closets*

Fig. 38
Storage Shelves and Closets

4.26 Handrails, Grab Bars, and Tub and Shower Seats.

4.26.1* General. All handrails, grab bars, and tub and shower seats *required to be accessible by 4.1, 4.8, 4.9, 4.16, 4.17, 4.20 or 4.21* shall comply with 4.26.

4.26.2* Size and Spacing of Grab Bars and Handrails. The diameter or width of the gripping surfaces of a handrail or grab bar shall be 1-1/4 in to 1-1/2 in (32 mm to 38 mm), or the shape shall provide an equivalent gripping surface. If handrails or grab bars are mounted adjacent to a wall, the space between the wall and the grab bar shall be 1-1/2 in (38 mm) (see Fig. 39(a), (b), (c), and *(e)*). Handrails may be located in a recess if the recess is a maximum of 3 in (75 mm) deep and extends at least 18 in (455 mm) above the top of the rail (see Fig. 39(d)).

4.26.3 Structural Strength. The structural strength of grab bars, tub and shower seats, fasteners, and mounting devices shall meet the following specification:

(1) Bending stress in a grab bar or seat induced by the maximum bending moment from the application of 250 lbf (1112N) shall be less than the allowable stress for the material of the grab bar or seat.

(2) Shear stress induced in a grab bar or seat by the application of 250 lbf (1112N) shall be less than the allowable shear stress for the material of the grab bar or seat. If the connection between the grab bar or seat and its mounting bracket or other support is considered to be fully restrained, then direct and torsional shear stresses shall be totaled for the combined shear stress, which shall not exceed the allowable shear stress.

(3) Shear force induced in a fastener or mounting device from the application of 250 lbf (1112N) shall be less than the allowable lateral load of either the fastener or mounting device or the supporting structure, whichever is the smaller allowable load.

(4) Tensile force induced in a fastener by a direct tension force of 250 lbf (1112N) plus the maximum moment from the application of 250 lbf (1112N) shall be less than the allowable withdrawal load between the fastener and the supporting structure.

(5) Grab bars shall not rotate within their fittings.

4.26 Handrails, Grab Bars, and Tub and Shower Seats

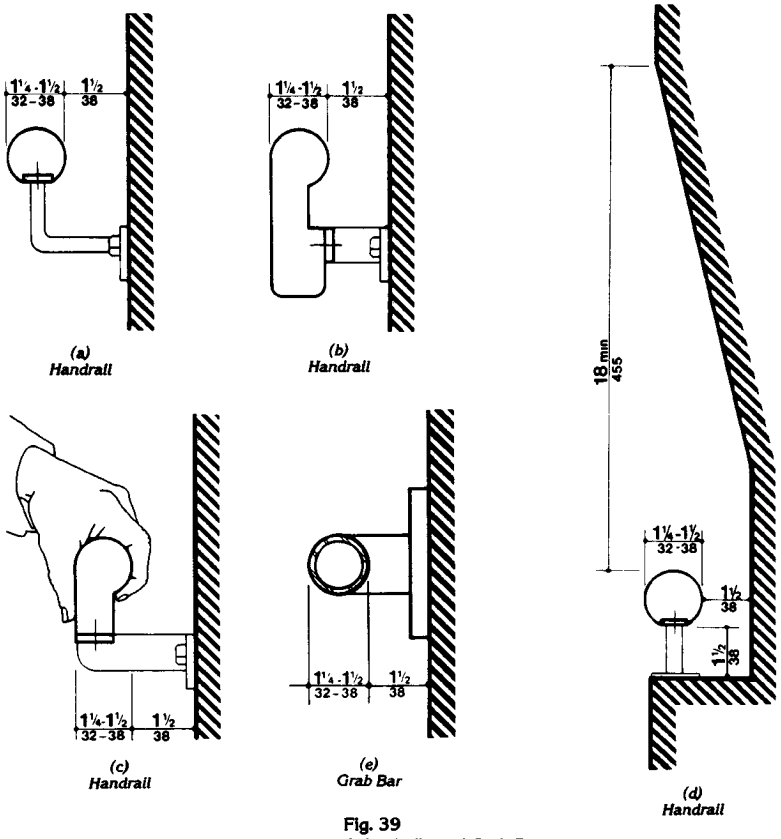

Fig. 39
Size and Spacing of Handrails and Grab Bars

4.26.4 Eliminating Hazards. A handrail or grab bar and any wall or other surface adjacent to it shall be free of any sharp or abrasive elements. Edges shall have a minimum radius of 1/8 in (3.2 mm).

4.27 Controls and Operating Mechanisms.

4.27.1 General. Controls and operating mechanisms *required to be accessible by 4.1* shall comply with 4.27.

4.28 Alarms

4.27.2 Clear Floor Space. Clear floor space complying with 4.2.4 that allows a forward or a parallel approach by a person using a wheelchair shall be provided at controls, dispensers, receptacles, and other operable equipment.

4.27.3* Height. The highest operable part of controls, dispensers, receptacles, and other operable equipment shall be placed within at least one of the reach ranges specified in 4.2.5 and 4.2.6. Electrical and communications system receptacles on walls shall be mounted no less than 15 in (380 mm) above the floor.

EXCEPTION: These requirements do not apply where the use of special equipment dictates otherwise or where electrical and communications systems receptacles are not normally intended for use by building occupants.

4.27.4 Operation. Controls and operating mechanisms shall be operable with one hand and shall not require tight grasping, pinching, or twisting of the wrist. The force required to activate controls shall be no greater than 5 lbf (22.2 N).

4.28 Alarms.

4.28.1 General. *Alarm systems required to be accessible by 4.1 shall comply with 4.28. At a minimum, visual signal appliances shall be provided in buildings and facilities in each of the following areas: restrooms and any other general usage areas (e.g., meeting rooms), hallways, lobbies, and any other area for common use.*

4.28.2* Audible Alarms. If provided, audible emergency alarms shall produce a sound that exceeds the prevailing equivalent sound level in the room or space by at least 15 *dbA* or exceeds any maximum sound level with a duration of 60 seconds by 5 *dbA*, whichever is louder. Sound levels for alarm signals shall not exceed 120 *dbA*.

4.28.3* Visual Alarms. *Visual alarm signal appliances shall be integrated into the building or facility alarm system. If single station audible alarms are provided then single station visual alarm signals shall be provided. Visual alarm signals shall have the following minimum photometric and location features:*

(1) The lamp shall be a xenon strobe type or equivalent.

(2) The color shall be clear or nominal white (i.e., unfiltered or clear filtered white light).

(3) The maximum pulse duration shall be two-tenths of one second (0.2 sec) with a maximum duty cycle of 40 percent. The pulse duration is defined as the time interval between initial and final points of 10 percent of maximum signal.

(4) The intensity shall be a minimum of 75 candela.

(5) The flash rate shall be a minimum of 1 Hz and a maximum of 3 Hz.

(6) The appliance shall be placed 80 in (2030 mm) above the highest floor level within the space or 6 in (152 mm) below the ceiling, whichever is lower.

(7) In general, no place in any room or space required to have a visual signal appliance shall be more than 50 ft (15 m) from the signal (in the horizontal plane). In large rooms and spaces exceeding 100 ft (30 m) across, without obstructions 6 ft (2 m) above the finish floor, such as auditoriums, devices may be placed around the perimeter, spaced a maximum 100 ft (30 m) apart, in lieu of suspending appliances from the ceiling.

(8) No place in common corridors or hallways in which visual alarm signalling appliances are required shall be more than 50 ft (15 m) from the signal.

4.28.4* Auxiliary Alarms. *Units and* sleeping accommodations shall have a visual alarm connected to the building emergency alarm system or shall have a standard 110-volt electrical receptacle into which such an alarm can be connected *and a means by which a signal from the building emergency alarm system can trigger such an auxiliary alarm. When visual alarms are in place the signal shall be visible in all areas of the unit or room.* Instructions for use of the auxiliary alarm or receptacle shall be provided.

4.29 *Detectable* Warnings.

4.29.1 General. *Detectable* warnings *required by 4.1 and 4.7* shall comply with 4.29.

4.29.2* *Detectable* Warnings on Walking Surfaces. *Detectable* warnings shall consist of *raised truncated domes with a diameter of nominal 0.9 in (23 mm), a height of nominal 0.2 in (5 mm) and a center-to-center spacing of nominal 2.35 in (60 mm) and* shall contrast *visually* with *adjoining surfaces, either light-on-dark, or dark-on-light.*

The material used to provide contrast shall be an integral part of the walking surface. Detectable warnings used on interior surfaces shall differ from adjoining walking surfaces in resiliency or sound-on-cane contact.

4.29.3 *Detectable* Warnings on Doors To Hazardous Areas. *(Reserved).*

4.29.4 *Detectable* Warnings at Stairs. *(Reserved).*

4.29.5 *Detectable* Warnings at Hazardous Vehicular Areas. If a walk crosses or adjoins a vehicular way, *and the walking surfaces are not separated by* curbs, railings, or other elements *between the pedestrian areas and vehicular areas*, the boundary between the areas shall be defined by a continuous *detectable* warning *which is* 36 in (915 mm) wide, complying with 4.29.2.

4.29.6 *Detectable* Warnings at Reflecting Pools. The edges of reflecting pools shall be protected by railings, walls, curbs, or *detectable* warnings complying with 4.29.2.

4.29.7 Standardization. *(Reserved).*

4.30 Signage.

4.30.1* General. Signage *required to be accessible by 4.1 shall comply with the applicable provisions of 4.30.*

4.30.2* Character Proportion. Letters and numbers on signs shall have a width-to-height ratio between 3:5 and 1:1 and a stroke-width-to-height ratio between 1:5 and 1:10.

4.30.3 *Character Height.* *Characters and numbers on signs shall be sized according to the viewing distance from which they are to be read. The minimum height is measured using an upper case X. Lower case characters are permitted.*

Height Above Finished Floor	*Minimum Character Height*
Suspended or Projected Overhead in compliance with 4.4.2	*3 in. (75 mm) minimum*

4.30.4* Raised *and Brailled* Characters *and Pictorial Symbol Signs (Pictograms).* Letters and numerals shall be raised 1/32 in, *upper case*, sans serif *or simple serif type and shall be accompanied with Grade 2 Braille*. Raised characters shall be at least 5/8 in (16 mm) high, but no higher than 2 in (50 mm). *Pictograms shall be accompanied by the equivalent verbal description placed directly below the pictogram. The border dimension of the pictogram shall be 6 in (152 mm) minimum in height.*

4.30.5* *Finish and Contrast.* *The characters and background of signs shall be eggshell, matte, or other non-glare finish.* Characters and symbols shall contrast with their background — either light characters on a dark background or dark characters on a light background.

4.30.6 *Mounting Location and Height.* *Where permanent identification is provided for rooms and spaces, signs shall be installed on the wall adjacent to the latch side of the door. Where there is no wall space to the latch side of the door, including at double leaf doors, signs shall be placed on the nearest adjacent wall. Mounting height shall be 60 in (1525 mm) above the finish floor to the centerline of the sign. Mounting location for such signage shall be so that a person may approach within 3 in (76 mm) of signage without encountering protruding objects or standing within the swing of a door.*

4.30.7* Symbols of Accessibility.

(1) Facilities and elements required to be identified as accessible by 4.1 shall use the international symbol of accessibility. The

4.30 Signage

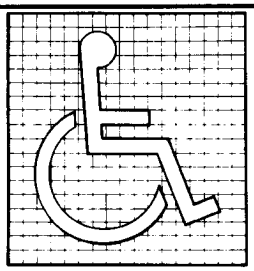

(a)
Proportions
International Symbol of Accessibility

(b)
Display Conditions
International Symbol of Accessibility

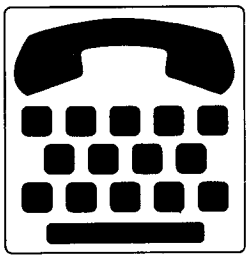

(c)
International TDD Symbol

(d)
International Symbol of Access for Hearing Loss

Fig. 43
International Symbols

symbol shall be displayed as shown in Fig. 43*(a) and (b)*.

(2) Volume Control Telephones. Telephones required to have a volume control by 4.1.3(17)(b) shall be identified by a sign containing a depiction of a telephone handset with radiating sound waves.

(3) Text Telephones. Text telephones required by 4.1.3 (17)(c) shall be identified by the international TDD symbol (Fig 43(c)). In addition, if a facility has a public text telephone, directional signage indicating the location of the nearest text telephone shall be placed adjacent to all banks of telephones which do not contain a text telephone. Such directional signage shall include the international TDD symbol. If a facility has no banks of telephones, the directional signage shall be provided at the entrance (e.g., in a building directory).

(4) Assistive Listening Systems. In assembly areas where permanently installed assistive listening systems are required by 4.1.3(19)(b) the availability of such systems shall be identified with signage that includes the international symbol of access for hearing loss (Fig 43(d)).

4.30.8* Illumination Levels. *(Reserved).*

4.31 Telephones.

4.31.1 General. Public telephones *required to be accessible by 4.1* shall comply with 4.31.

4.31.2 Clear Floor or Ground Space. A clear floor or ground space at least 30 in by 48 in (760 mm by 1220 mm) that allows either a forward or parallel approach by a person using a wheelchair shall be provided at telephones (see Fig. 44). The clear floor or ground space shall comply with 4.2.4. Bases, enclosures, and fixed seats shall not impede approaches to telephones by people who use wheelchairs.

4.31.3* Mounting Height. The highest operable part of the telephone shall be within the reach ranges specified in 4.2.5 or 4.2.6.

4.31.4 ***Protruding Objects.*** *Telephones shall comply with 4.4.*

4.31 Telephones

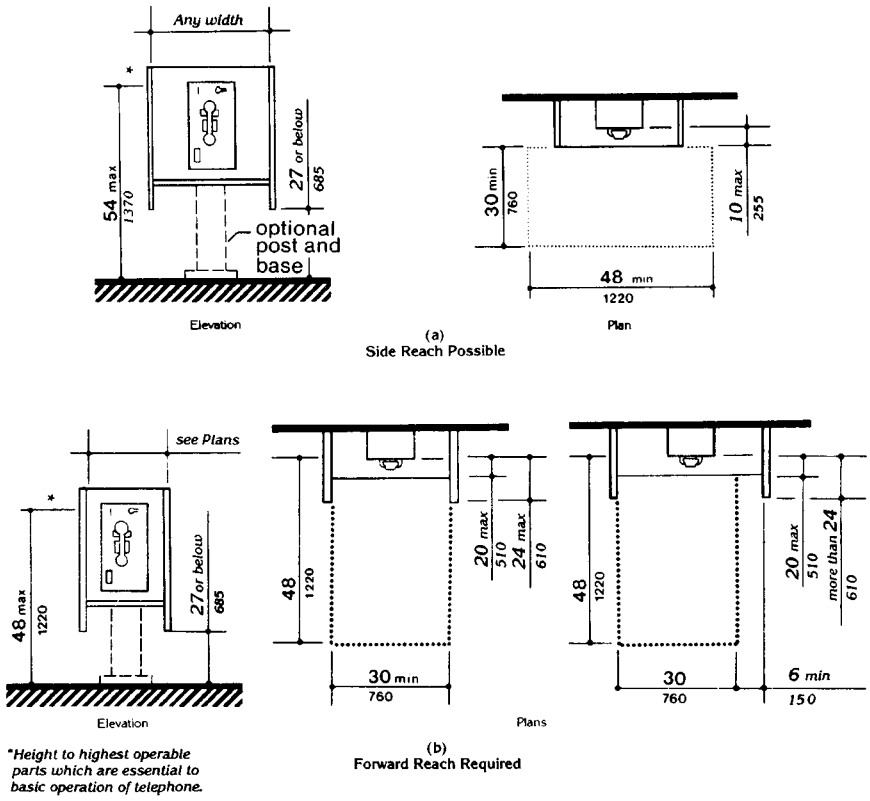

Fig. 44
Mounting Heights and Clearances for Telephones

4.31.5 ***Hearing Aid Compatible and Volume Control Telephones Required by 4.1.***

(1) Telephones shall be hearing aid compatible.

(2) Volume controls, *capable of a minimum of 12 dbA and a maximum of 18 dbA above normal, shall be provided in accordance with 4.1.3. If an automatic reset is provided then 18 dbA may be exceeded.*

4.31.6 Controls. Telephones shall have pushbutton controls where service for such equipment is available.

4.31.7 Telephone Books. Telephone books, if provided, shall be located *in a position that complies with the reach ranges specified in 4.2.5 and 4.2.6.*

4.31.8 Cord Length. The cord from the telephone to the handset shall be at least 29 in (735 mm) long.

4.31.9* Text Telephones Required by 4.1.

(1) Text telephones used with a pay telephone shall be permanently affixed within, or adjacent to, the telephone enclosure. If an acoustic coupler is used, the telephone cord shall be sufficiently long to allow connection of the text telephone and the telephone receiver.

(2) Pay telephones designed to accommodate a portable text telephone shall be equipped with a shelf and an electrical outlet within or adjacent to the telephone enclosure. The telephone handset shall be capable of being placed flush on the surface of the shelf. The shelf shall be capable of accommodating a text telephone and shall have 6 in (152 mm) minimum vertical clearance in the area where the text telephone is to be placed.

(3) Equivalent facilitation may be provided. For example, a portable text telephone may be made available in a hotel at the registration desk if it is available on a 24-hour basis for use with nearby public pay telephones. In this instance, at least one pay telephone shall comply with paragraph 2 of this section. In addition, if an acoustic coupler is used, the telephone handset cord shall be sufficiently long so as to allow connection of the text telephone and the telephone receiver. Directional signage shall be provided and shall comply with 4.30.7.

4.32 *Fixed or Built-in* Seating and Tables.

4.32.1 Minimum Number. Fixed or built-in seating or tables *required to be accessible by 4.1* shall comply with 4.32.

4.32.2 Seating. If seating spaces for people in wheelchairs are provided at *fixed* tables or counters, clear floor space complying with 4.2.4 shall be provided. Such clear floor space shall not overlap knee space by more than 19 in (485 mm) (see Fig. 45).

4.32.3 Knee Clearances. If seating for people in wheelchairs is provided at tables *or* counters, knee spaces at least 27 in (685 mm) high, 30 in (760 mm) wide, and 19 in (485 mm) deep shall be provided (see Fig. 45).

4.32.4* Height of Tables or Counters. The tops of *accessible* tables and *counters* shall be from 28 in to 34 in (710 mm to 865 mm) *above the finish* floor or ground.

4.33 Assembly Areas.

4.33.1 Minimum Number. Assembly *and associated* areas *required to be accessible by 4.1 shall comply with 4.33.*

4.33.2* Size of Wheelchair Locations. Each wheelchair location shall provide minimum clear ground or floor spaces as shown in Fig. 46.

4.33.3* Placement of Wheelchair Locations. Wheelchair areas shall be an integral part of any fixed seating plan and shall be *provided so as to provide people with physical disabilities a choice of admission prices and lines of sight comparable to those for members of the general public.* They shall adjoin an accessible route that also serves as a means of egress in case of emergency. *At least one companion fixed seat shall be provided next to each wheelchair seating area. When the seating capacity exceeds 300, wheelchair spaces shall be provided in more than one location. Readily removable seats may be installed in wheelchair spaces when the spaces are not required to accommodate wheelchair users.*

EXCEPTION: Accessible viewing positions may be clustered for bleachers, balconies, and other areas having sight lines that require slopes of greater than 5 percent. Equivalent accessible viewing positions may be located on levels having accessible egress.

4.33.4 Surfaces. The ground or floor at wheelchair locations shall be level and shall comply with 4.5.

4.33 Assembly Areas

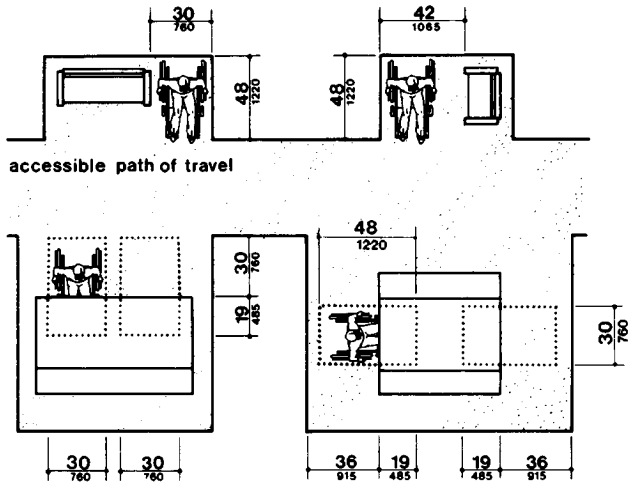

Fig. 45
Minimum Clearances for Seating and Tables

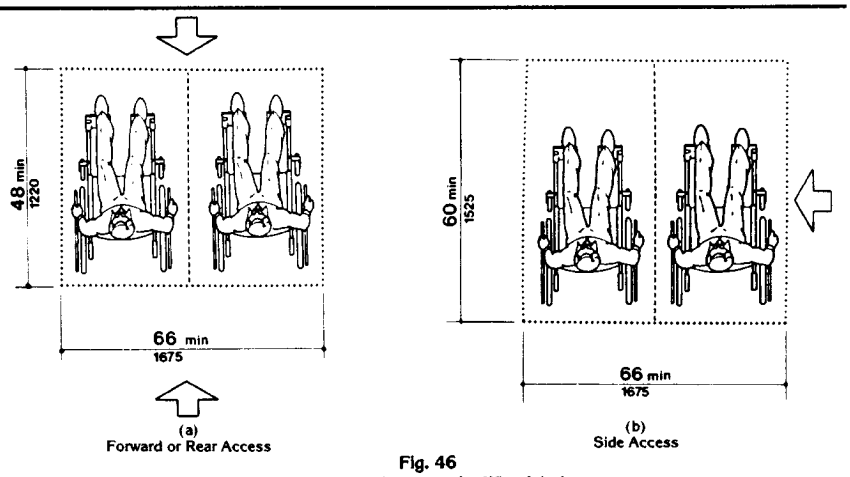

Fig. 46
Space Requirements for Wheelchair
Seating Spaces in Series

4.33.5 Access to Performing Areas

4.33.5 Access to Performing Areas. An accessible route shall connect wheelchair seating locations with performing areas, including stages, arena floors, dressing rooms, locker rooms, and other spaces used by performers.

4.33.6* Placement of Listening Systems. If the listening system provided serves individual fixed seats, then such seats shall be located within a 50 ft (15 m) viewing distance of the stage or playing area and shall have a complete view of the stage or playing area.

4.33.7* Types of Listening Systems. *Assistive listening systems (ALS) are intended to augment standard public address and audio systems by providing signals which can be received directly by persons with special receivers or their own hearing aids and which eliminate or filter background noise. The type of assistive listening system appropriate for a particular application depends on the characteristics of the setting, the nature of the program, and the intended audience. Magnetic induction loops, infra-red and radio frequency systems are types of listening systems which are appropriate for various applications.*

4.34 Automated Teller Machines.

4.34.1 General. *Each automated teller machine required to be accessible by 4.1.3 shall be on an accessible route and shall comply with 4.34.*

4.34.2 Clear Floor Space. *The automated teller machine shall be located so that clear floor space complying with 4.2.4 is provided to allow a person using a wheelchair to make a forward approach, a parallel approach, or both, to the machine.*

4.34.3 Reach Ranges.

(1) Forward Approach Only. If only a forward approach is possible, operable parts of all controls shall be placed within the forward reach range specified in 4.2.5.

(2) Parallel Approach Only. If only a parallel approach is possible, operable parts of controls shall be placed as follows:

(a) Reach Depth Not More Than 10 in (255 mm). Where the reach depth to the operable parts of all controls as measured from the vertical plane perpendicular to the edge of the unobstructed clear floor space at the farthest protrusion of the automated teller machine or surround is not more than 10 in (255 mm), the maximum height above the finished floor or grade shall be 54 in (1370 mm).

(b) Reach Depth More Than 10 in (255 mm). Where the reach depth to the operable parts of any control as measured from the vertical plane perpendicular to the edge of the unobstructed clear floor space at the farthest protrusion of the automated teller machine or surround is more than 10 in (255 mm), the maximum height above the finished floor or grade shall be as follows:

Reach Depth		***Maximum Height***	
In	*Mm*	*In*	*Mm*
10	255	54	1370
11	280	53½	1360
12	305	53	1345
13	330	52½	1335
14	355	51½	1310
15	380	51	1295
16	405	50½	1285
17	430	50	1270
18	455	49½	1255
19	485	49	1245
20	510	48½	1230
21	535	47½	1205
22	560	47	1195
23	585	46½	1180
24	610	46	1170

(3) Forward and Parallel Approach. If both a forward and parallel approach are possible, operable parts of controls shall be placed within at least one of the reach ranges in paragraphs (1) or (2) of this section.

(4) Bins. Where bins are provided for envelopes, waste paper, or other purposes, at least one of each type provided shall comply with the applicable reach ranges in paragraph (1), (2), or (3) of this section.

EXCEPTION: Where a function can be performed in a substantially equivalent manner by using an alternate control, only one of the controls needed to perform that function is required to comply with this section. If the controls are identified by tactile markings, such markings shall be provided on both controls.

4.34.4 Controls. *Controls for user activation shall comply with 4.27.4.*

4.35 Dressing and Fitting Rooms

4.34.5 Equipment for Persons with Vision Impairments. *Instructions and all information for use shall be made accessible to and independently usable by persons with vision impairments.*

4.35 Dressing and Fitting Rooms.

4.35.1 General. *Dressing and fitting rooms required to be accessible by 4.1 shall comply with 4.35 and shall be on an accessible route.*

4.35.2 Clear Floor Space. *A clear floor space allowing a person using a wheelchair to make a 180-degree turn shall be provided in every accessible dressing room entered through a swinging or sliding door. No door shall swing into any part of the turning space. Turning space shall not be required in a private dressing room entered through a curtained opening at least 32 in (815 mm) wide if clear floor space complying with section 4.2 renders the dressing room usable by a person using a wheelchair.*

4.35.3 Doors. *All doors to accessible dressing rooms shall be in compliance with section 4.13.*

4.35.4 Bench. *Every accessible dressing room shall have a 24 in by 48 in (610 mm by 1220 mm) bench fixed to the wall along the longer dimension. The bench shall be mounted 17 in to 19 in (430 mm to 485 mm) above the finish floor. Clear floor space shall be provided alongside the bench to allow a person using a wheelchair to make a parallel transfer onto the bench. The structural strength of the bench and attachments shall comply with 4.26.3. Where installed in conjunction with showers, swimming pools, or other wet locations, water shall not accumulate upon the surface of the bench and the bench shall have a slip-resistant surface.*

4.35.5 Mirror. *Where mirrors are provided in dressing rooms of the same use, then in an accessible dressing room, a full-length mirror, measuring at least 18 in wide by 54 in high (460 mm by 1370 mm), shall be mounted in a position affording a view to a person on the bench as well as to a person in a standing position.*

NOTE: Sections 4.1.1 through 4.1.7 and sections 5 through 10 are different from ANSI A117.1 in their entirety and are printed in standard type.

5. RESTAURANTS AND CAFETERIAS.

5.1* General. Except as specified or modified in this section, restaurants and cafeterias shall comply with the requirements of 4.1 to 4.35. Where fixed tables (or dining counters where food is consumed but there is no service) are provided, at least 5 percent, but not less than one, of the fixed tables (or a portion of the dining counter) shall be accessible and shall comply with 4.32 as required in 4.1.3(18). In establishments where separate areas are designated for smoking and non-smoking patrons, the required number of accessible fixed tables (or counters) shall be proportionally distributed between the smoking and non-smoking areas. In new construction, and where practicable in alterations, accessible fixed tables (or counters) shall be distributed throughout the space or facility.

5.2 Counters and Bars. Where food or drink is served at counters exceeding 34 in (865 mm) in height for consumption by customers seated on stools or standing at the counter, a portion of the main counter which is 60 in (1525 mm) in length minimum shall be provided in compliance with 4.32 or service shall be available at accessible tables within the same area.

5.3 Access Aisles. All accessible fixed tables shall be accessible by means of an access aisle at least 36 in (915 mm) clear between parallel edges of tables or between a wall and the table edges.

5.4 Dining Areas. In new construction, all dining areas, including raised or sunken dining areas, loggias, and outdoor seating areas, shall be accessible. In non-elevator buildings, an accessible means of vertical access to the mezzanine is not required under the following conditions: 1) the area of mezzanine seating measures no more than 33 percent of the area of the total accessible seating area; 2) the same services and decor are provided in an accessible space usable by the general public; and, 3) the accessible areas are not restricted to use by people with disabilities. In alterations, accessibility to raised or sunken dining areas, or to all parts of outdoor seating areas is not required provided that the same services and decor are provided in an accessible space usable by the general public and are not restricted to use by people with disabilities.

5.5 Food Service Lines. Food service lines shall have a minimum clear width of 36 in (915 mm), with a preferred clear width of 42 in (1065 mm) to allow passage around a person using a wheelchair. Tray slides shall be mounted no higher than 34 in (865 mm) above the floor (see Fig. 53). If self-service shelves

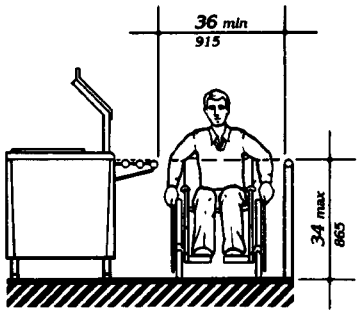

Fig. 53
Food Service Lines

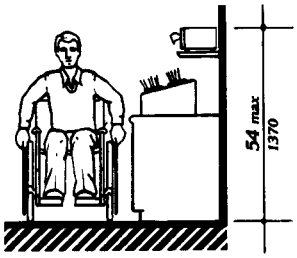

Fig. 54
Tableware Areas

6.0 Medical Care Facilities

are provided, at least 50 percent of each type must be within reach ranges specified in 4.2.5 and 4.2.6.

5.6 Tableware and Condiment Areas. Self-service shelves and dispensing devices for tableware, dishware, condiments, food and beverages shall be installed to comply with 4.2 (see Fig. 54).

5.7 Raised Platforms. In banquet rooms or spaces where a head table or speaker's lectern is located on a raised platform, the platform shall be accessible in compliance with 4.8 or 4.11. Open edges of a raised platform shall be protected by placement of tables or by a curb.

5.8 Vending Machines and Other Equipment. Spaces for vending machines and other equipment shall comply with 4.2 and shall be located on an accessible route.

5.9 Quiet Areas. (Reserved).

6. MEDICAL CARE FACILITIES.

6.1 General. Medical care facilities included in this section are those in which people receive physical or medical treatment or care and where persons may need assistance in responding to an emergency and where the period of stay may exceed twenty-four hours. In addition to the requirements of 4.1 through 4.35, medical care facilities and buildings shall comply with 6.

(1) Hospitals - general purpose hospitals, psychiatric facilities, detoxification facilities — At least 10 percent of patient bedrooms and toilets, and all public use and common use areas are required to be designed and constructed to be accessible.

(2) Hospitals and rehabilitation facilities that specialize in treating conditions that affect mobility, or units within either that specialize in treating conditions that affect mobility — All patient bedrooms and toilets, and all public use and common use areas are required to be designed and constructed to be accessible.

(3) Long term care facilities, nursing homes — At least 50 percent of patient bedrooms and toilets, and all public use and common use areas are required to be designed and constructed to be accessible.

(4) Alterations to patient bedrooms.

(a) When patient bedrooms are being added or altered as part of a planned renovation of an entire wing, a department, or other discrete area of an existing medical facility, a percentage of the patient bedrooms that are being added or altered shall comply with 6.3. The percentage of accessible rooms provided shall be consistent with the percentage of rooms required to be accessible by the applicable requirements of 6.1(1), 6.1(2), or 6.1(3), until the number of accessible patient bedrooms in the facility equals the overall number that would be required if the facility were newly constructed. (For example, if 20 patient bedrooms are being altered in the obstetrics department of a hospital, 2 of the altered rooms must be made accessible. If, within the same hospital, 20 patient bedrooms are being altered in a unit that specializes in treating mobility impairments, all of the altered rooms must be made accessible.) Where toilet/bath rooms are part of patient bedrooms which are added or altered and required to be accessible, each such patient toilet/bathroom shall comply with 6.4.

(b) When patient bedrooms are being added or altered individually, and not as part of an alteration of the entire area, the altered patient bedrooms shall comply with 6.3, unless either: a) the number of accessible rooms provided in the department or area containing the altered patient bedroom equals the number of accessible patient bedrooms that would be required if the percentage requirements of 6.1(1), 6.1(2), or 6.1(3) were applied to that department or area; or b) the number of accessible patient bedrooms in the facility equals the overall number that would be required if the facility were newly constructed. Where toilet/bathrooms are part of patient bedrooms which are added or altered and required to be accessible, each such toilet/bathroom shall comply with 6.4.

6.2 Entrances. At least one accessible entrance that complies with 4.14 shall be protected from the weather by canopy or roof overhang. Such entrances shall incorporate a passenger loading zone that complies with 4.6.6.

6.3 Patient Bedrooms. Provide accessible patient bedrooms in compliance with 4.1 through 4.35. Accessible patient bedrooms shall comply with the following:

(1) Each bedroom shall have a door that complies with 4.13.

EXCEPTION: Entry doors to acute care hospital bedrooms for in-patients shall be exempted from the requirement in 4.13.6 for maneuvering space at the latch side of the door if the door is at least 44 in (1120 mm) wide.

(2) Each bedroom shall have adequate space to provide a maneuvering space that complies with 4.2.3. In rooms with two beds, it is preferable that this space be located between beds.

(3) Each bedroom shall have adequate space to provide a minimum clear floor space of 36 in (915 mm) along each side of the bed and to provide an accessible route complying with 4.3.3 to each side of each bed.

6.4 Patient Toilet Rooms. Where toilet/bathrooms are provided as a part of a patient bedroom, each patient bedroom that is required to be accessible shall have an accessible toilet/bathroom that complies with 4.22 or 4.23 and shall be on an accessible route.

7. BUSINESS, MERCANTILE AND CIVIC.

7.1 General. In addition to the requirements of 4.1 to 4.35, the design of all areas used for business transactions with the public shall comply with 7.

7.2 Sales and Service Counters, Teller Windows, Information Counters.

(1) In department stores and miscellaneous retail stores where counters have cash registers and are provided for sales or distribution of goods or services to the public, at least one of each type shall have a portion of the counter which is at least 36 in (915 mm) in length with a maximum height of 36 in (915 mm) above the finish floor. It shall be on an accessible route complying with 4.3. The accessible counters must be dispersed throughout the building or facility. In alterations where it is technically infeasible to provide an accessible counter, an auxiliary counter meeting these requirements may be provided.

(2) At ticketing counters, teller stations in a bank, registration counters in hotels and motels, box office ticket counters, and other counters that may not have a cash register but at which goods or services are sold or distributed, either:

(i) a portion of the main counter which is a minimum of 36 in (915 mm) in length shall be provided with a maximum height of 36 in (915 mm); or

(ii) an auxiliary counter with a maximum height of 36 in (915 mm) in close proximity to the main counter shall be provided; or

(iii) equivalent facilitation shall be provided (e.g., at a hotel registration counter, equivalent facilitation might consist of: (1) provision of a folding shelf attached to the main counter on which an individual with disabilities can write, and (2) use of the space on the side of the counter or at the concierge desk, for handing materials back and forth).

All accessible sales and service counters shall be on an accessible route complying with 4.3.

(3) In buildings or facilities subject to title II of the ADA:

(i) Where counters have cash registers and are provided for the sales or distribution of goods or services to the public, at least one of each type shall comply with 7.2(1).

(ii) At teller windows, service counters, or other counters that may not have a cash register but at which goods or services are sold or distributed, a portion of the main counter which is a minimum of 36 in (915 mm) in length shall be provided with a maximum height of 36 in (915 mm) or, an auxiliary counter with a maximum height of 36 in (915 mm) in close proximity to the main counter shall be provided.

7.2 Sales and Service Counters, Teller Windows, Information Counters

(iii)* In addition, at counters or teller windows with solid partitions or security glazing separating personnel from the public, at least one of each type shall provide a method to facilitate voice communication. Such methods may include, but are not limited to, grilles, talk-through baffles, intercoms, or telephone handset devices. The method of communication shall be accessible to both individuals who use wheelchairs and individuals who have difficulty bending or stooping. If provided, at least one telephone communication device shall be equipped with volume controls complying with 4.31.5. Hand-operable communications devices, if provided, shall comply with 4.27. (4)* Assistive Listening Devices. (Reserved).	

61A

8.0 Libraries

7.3* Check-out Aisles.

(1) In new construction, accessible check-out aisles shall be provided in conformance with the table below:

Total Check-out Aisles of Each Design	Minimum Number of Accessible Check-out Aisles (of each design)
1 - 4	1
5 - 8	2
8 - 15	3
over 15	3, plus 20% of additional aisles

EXCEPTION: In new construction, where the selling space is under 5000 square feet, only one check-out aisle is required to be accessible.

EXCEPTION: In alterations, at least one check-out aisle shall be accessible in facilities under 5000 square feet of selling space. In facilities of 5000 or more square feet of selling space, at least one of each design of check-out aisle shall be made accessible when altered until the number of accessible check-out aisles of each design equals the number required in new construction.

Examples of check-out aisles of different "design" include those which are specifically designed to serve different functions. Different "design" includes but is not limited to the following features - length of belt or no belt; or permanent signage designating the aisle as an express lane.

(2) Clear aisle width for accessible check-out aisles shall comply with 4.2.1 and maximum adjoining counter height shall not exceed 38 in (965 mm) above the finish floor. The top of the lip shall not exceed 40 in (1015 mm) above the finish floor.

(3) Signage identifying accessible check-out aisles shall comply with 4.30.7 and shall be mounted above the check-out aisle in the same location where the check-out number or type of check-out is displayed.

7.4 Security Bollards. Any device used to prevent the removal of shopping carts from store premises shall not prevent access or egress to people in wheelchairs. An alternate entry that is equally convenient to that provided for the ambulatory population is acceptable.

8. LIBRARIES.

8.1 General. In addition to the requirements of 4.1 to 4.35, the design of all public areas of a library shall comply with 8, including reading and study areas, stacks, reference rooms, reserve areas, and special facilities or collections.

8.2 Reading and Study Areas. At least 5 percent or a minimum of one of each element of fixed seating, tables, or study carrels shall comply with 4.2 and 4.32. Clearances between fixed accessible tables and between study carrels shall comply with 4.3.

8.3 Check-Out Areas. At least one lane at each check-out area shall comply with 7.2(1). Any traffic control or book security gates or turnstiles shall comply with 4.13.

8.4 Card Catalogs and Magazine Displays. Minimum clear aisle space at card catalogs and magazine displays shall comply with Fig. 55. Maximum reach height shall comply with 4.2, with a height of 48 in (1220 mm) preferred irrespective of approach allowed.

8.5 Stacks. Minimum clear aisle width between stacks shall comply with 4.3, with a minimum clear aisle width of 42 in (1065 mm) preferred where possible. Shelf height in stack areas is unrestricted (see Fig. 56).

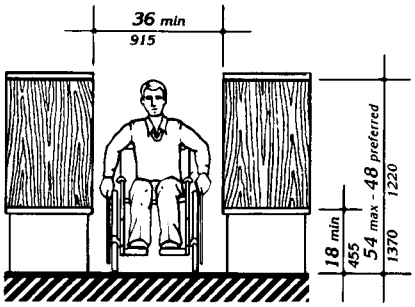

Fig. 55
Card Catalog

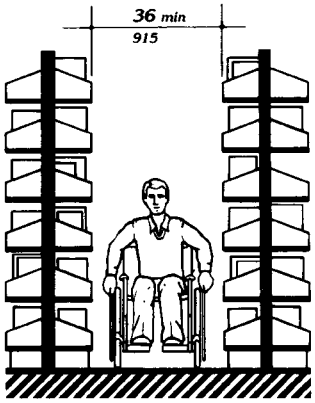

Fig. 56
Stacks

9. ACCESSIBLE TRANSIENT LODGING.

(1) Except as specified in the special technical provisions of this section, accessible transient lodging shall comply with the applicable requirements of 4.1 through 4.35. Transient lodging includes facilities or portions thereof used for sleeping accommodations, when not classed as a medical care facility.

9.1 Hotels, Motels, Inns, Boarding Houses, Dormitories, Resorts and Other Similar Places of Transient Lodging.

9.1.1 General. All public use and common use areas are required to be designed and constructed to comply with section 4 (Accessible Elements and Spaces: Scope and Technical Requirements).

EXCEPTION: Sections 9.1 through 9.4 do not apply to an establishment located within a building that contains not more than five rooms for rent or hire and that is actually occupied by the proprietor of such establishment as the residence of such proprietor.

9.1.2 Accessible Units, Sleeping Rooms, and Suites. Accessible sleeping rooms or suites that comply with the requirements of 9.2 (Requirements for Accessible Units, Sleeping Rooms, and Suites) shall be provided in conformance with the table below. In addition, in hotels, of 50 or more sleeping rooms or suites, additional accessible sleeping rooms or suites that include a roll-in shower shall also be provided in conformance with the table below. Such accommodations shall comply with the requirements of 9.2, 4.21, and Figure 57(a) or (b).

9.1.3 Sleeping Accommodations for Persons with Hearing Impairments

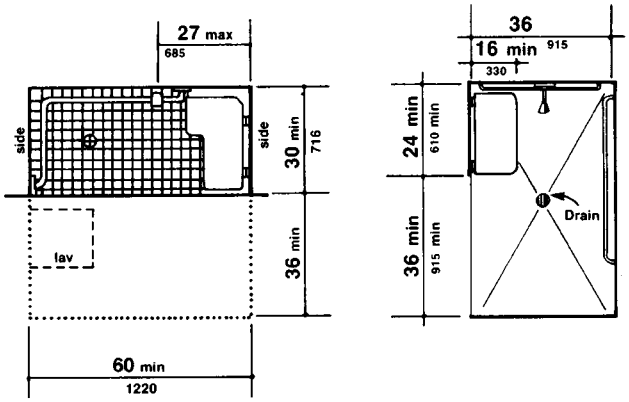

(a) (b)

Fig. 57
Roll-in Shower with Folding Seat

Number of Rooms	Accessible Rooms	Rooms with Roll-in Showers
1 to 25	1	
26 to 50	2	
51 to 75	3	1
76 to 100	4	1
101 to 150	5	2
151 to 200	6	2
201 to 300	7	3
301 to 400	8	4
401 to 500	9	4 plus one for each additional 100 over 400
501 to 1000	2% of total	
1001 and over	20 plus 1 for each 100 over 1000	

9.1.3 Sleeping Accommodations for Persons with Hearing Impairments. In addition to those accessible sleeping rooms and suites required by 9.1.2, sleeping rooms and suites that comply with 9.3 (Visual Alarms, Notification Devices, and Telephones) shall be provided in conformance with the following table:

Number of Elements	Accessible Elements
1 to 25	1
26 to 50	2
51 to 75	3
76 to 100	4
101 to 150	5
151 to 200	6
201 to 300	7
301 to 400	8
401 to 500	9
501 to 1000	2% of total
1001 and over	20 plus 1 for each 100 over 1000

9.2 Requirements for Accessible Units, Sleeping Rooms and Suites

9.1.4 Classes of Sleeping Accommodations.

(1) In order to provide persons with disabilities a range of options equivalent to those available to other persons served by the facility, sleeping rooms and suites required to be accessible by 9.1.2 shall be dispersed among the various classes of sleeping accommodations available to patrons of the place of transient lodging. Factors to be considered include room size, cost, amenities provided, and the number of beds provided.

(2) Equivalent Facilitation. For purposes of this section, it shall be deemed equivalent facilitation if the operator of a facility elects to limit construction of accessible rooms to those intended for multiple occupancy, provided that such rooms are made available at the cost of a single-occupancy room to an individual with disabilities who requests a single-occupancy room.

9.1.5. Alterations to Accessible Units, Sleeping Rooms, and Suites. When sleeping rooms are being altered in an existing facility, or portion thereof, subject to the requirements of this section, at least one sleeping room or suite that complies with the requirements of 9.2 (Requirements for Accessible Units, Sleeping Rooms, and Suites) shall be provided for each 25 sleeping rooms, or fraction thereof, of rooms being altered until the number of such rooms provided equals the number required to be accessible with 9.1.2. In addition, at least one sleeping room or suite that complies with the requirements of 9.3 (Visual Alarms, Notification Devices, and Telephones) shall be provided for each 25 sleeping rooms, or fraction thereof, of rooms being altered until the number of such rooms equals the number required to be accessible by 9.1.3.

9.2 Requirements for Accessible Units, Sleeping Rooms and Suites.

9.2.1 General. Units, sleeping rooms, and suites required to be accessible by 9.1 shall comply with 9.2.

9.2.2 Minimum Requirements. An accessible unit, sleeping room or suite shall be on an accessible route complying with 4.3 and have the following accessible elements and spaces.

(1) Accessible sleeping rooms shall have a 36 in (915 mm) clear width maneuvering space located along both sides of a bed, except that where two beds are provided, this requirement can be met by providing a 36 in (915 mm) wide maneuvering space located between the two beds.

(2) An accessible route complying with 4.3 shall connect all accessible spaces and elements, including telephones, within the unit, sleeping room, or suite. This is not intended to require an elevator in multi-story units as long as the spaces identified in 9.2.2(6) and (7) are on accessible levels and the accessible sleeping area is suitable for dual occupancy.

(3) Doors and doorways designed to allow passage into and within all sleeping rooms, suites or other covered units shall comply with 4.13.

(4) If fixed or built-in storage facilities such as cabinets, shelves, closets, and drawers are provided in accessible spaces, at least one of each type provided shall contain storage space complying with 4.25. Additional storage may be provided outside of the dimensions required by 4.25.

(5) All controls in accessible units, sleeping rooms, and suites shall comply with 4.27.

(6) Where provided as part of an accessible unit, sleeping room, or suite, the following spaces shall be accessible and shall be on an accessible route:

(a) the living area.

(b) the dining area.

(c) at least one sleeping area.

(d) patios, terraces, or balconies.

EXCEPTION: The requirements of 4.13.8 and 4.3.8 do not apply where it is necessary to utilize a higher door threshold or a change in level to protect the integrity of the unit from wind/water damage. Where this exception results in patios, terraces or balconies that are not at an accessible level, equivalent facilitation

shall be provided. (E.g., equivalent facilitation at a hotel patio or balcony might consist of providing raised decking or a ramp to provide accessibility.)

(e) at least one full bathroom (i.e., one with a water closet, a lavatory, and a bathtub or shower).

(f) if only half baths are provided, at least one half bath.

(g) carports, garages or parking spaces.

(7) Kitchens, Kitchenettes, or Wet Bars. When provided as accessory to a sleeping room or suite, kitchens, kitchenettes, wet bars, or similar amenities shall be accessible. Clear floor space for a front or parallel approach to cabinets, counters, sinks, and appliances shall be provided to comply with 4.2.4. Countertops and sinks shall be mounted at a maximum height of 34 in (865 mm) above the floor. At least fifty percent of shelf space in cabinets or refrigerator/freezers shall be within the reach ranges of 4.2.5 or 4.2.6 and space shall be designed to allow for the operation of cabinet and/or appliance doors so that all cabinets and appliances are accessible and usable. Controls and operating mechanisms shall comply with 4.27.

(8) Sleeping room accommodations for persons with hearing impairments required by 9.1 and complying with 9.3 shall be provided in the accessible sleeping room or suite.

9.3 Visual Alarms, Notification Devices and Telephones.

9.3.1 General. In sleeping rooms required to comply with this section, auxiliary visual alarms shall be provided and shall comply with 4.28.4. Visual notification devices shall also be provided in units, sleeping rooms and suites to alert room occupants of incoming telephone calls and a door knock or bell. Notification devices shall not be connected to auxiliary visual alarm signal appliances. Permanently installed telephones shall have volume controls complying with 4.31.5; an accessible electrical outlet within 4 ft (1220 mm) of a telephone connection shall be provided to facilitate the use of a text telephone.

9.3.2 Equivalent Facilitation. For purposes of this section, equivalent facilitation shall include the installation of electrical outlets (including outlets connected to a facility's central alarm system) and telephone wiring in sleeping rooms and suites to enable persons with hearing impairments to utilize portable visual alarms and communication devices provided by the operator of the facility.

9.4 Other Sleeping Rooms and Suites.

Doors and doorways designed to allow passage into and within all sleeping units or other covered units shall comply with 4.13.5.

9.5 Transient Lodging in Homeless Shelters, Halfway Houses, Transient Group Homes, and Other Social Service Establishments.

9.5.1 New Construction. In new construction all public use and common use areas are required to be designed and constructed to comply with section 4. At least one of each type of amenity (such as washers, dryers and similar equipment installed for the use of occupants) in each common area shall be accessible and shall be located on an accessible route to any accessible unit or sleeping accommodation.

EXCEPTION: Where elevators are not provided as allowed in 4.1.3(5), accessible amenities are not required on inaccessible floors as long as one of each type is provided in common areas on accessible floors.

9.5.2 Alterations.

(1) Social service establishments which are not homeless shelters:

(a) The provisions of 9.5.3 and 9.1.5 shall apply to sleeping rooms and beds.

(b) Alteration of other areas shall be consistent with the new construction provisions of 9.5.1.

(2) Homeless shelters. If the following elements are altered, the following requirements apply:

(a) at least one public entrance shall allow a person with mobility impairments to approach, enter and exit including a minimum clear door width of 32 in (815 mm).

(b) sleeping space for homeless persons as provided in the scoping provisions of 9.1.2 shall include doors to the sleeping area with a minimum clear width of 32 in (815 mm) and maneuvering space around the beds for persons with mobility impairments complying with 9.2.2(1).

(c) at least one toilet room for each gender or one unisex toilet room shall have a minimum clear door width of 32 in (815 mm), minimum turning space complying with 4.2.3, one water closet complying with 4.16, one lavatory complying with 4.19 and the door shall have a privacy latch; and, if provided, at least one tub or shower shall comply with 4.20 or 4.21, respectively.

(d) at least one common area which a person with mobility impairments can approach, enter and exit including a minimum clear door width of 32 in (815 mm).

(e) at least one route connecting elements (a), (b), (c) and (d) which a person with mobility impairments can use including minimum clear width of 36 in (915 mm), passing space complying with 4.3.4, turning space complying with 4.2.3 and changes in levels complying with 4.3.8.

(f) homeless shelters can comply with the provisions of (a)-(e) by providing the above elements on one accessible floor.

9.5.3. Accessible Sleeping Accommodations in New Construction. Accessible sleeping rooms shall be provided in conformance with the table in 9.1.2 and shall comply with 9.2 Accessible Units, Sleeping Rooms and Suites (where the items are provided). Additional sleeping rooms that comply with 9.3 Sleeping Accommodations for Persons with Hearing Impairments shall be provided in conformance with the table provided in 9.1.3.

In facilities with multi-bed rooms or spaces, a percentage of the beds equal to the table provided in 9.1.2 shall comply with 9.2.2(1).

10. TRANSPORTATION FACILITIES.

10.1 General. Every station, bus stop, bus stop pad, terminal, building or other transportation facility, shall comply with the applicable provisions of 4.1 through 4.35, sections 5 through 9, and the applicable provisions of this section. The exceptions for elevators in 4.1.3(5), exception 1 and 4.1.6(1)(k) do not apply to a terminal, depot, or other station used for specified public transportation, or an airport passenger terminal, or facilities subject to Title II.

10.2 Bus Stops and Terminals.

10.2.1 New Construction.

(1) Where new bus stop pads are constructed at bus stops, bays or other areas where a lift or ramp is to be deployed, they shall have a firm, stable surface; a minimum clear length of 96 inches (measured from the curb or vehicle roadway edge) and a minimum clear width of 60 inches (measured parallel to the vehicle roadway) to the maximum extent allowed by legal or site constraints; and shall be connected to streets, sidewalks or pedestrian paths by an accessible route complying with 4.3 and 4.4. The slope of the pad parallel to the roadway shall, to the extent practicable, be the same as the roadway. For water drainage, a maximum slope of 1:50 (2%) perpendicular to the roadway is allowed.

(2) Where provided, new or replaced bus shelters shall be installed or positioned so as to permit a wheelchair or mobility aid user to enter from the public way and to reach a location, having a minimum clear floor area of 30 inches by 48 inches, entirely within the perimeter of the shelter. Such shelters shall be connected by an accessible route to the boarding area provided under paragraph (1) of this section.

(3) Where provided, all new bus route identification signs shall comply with 4.30.5. In addition, to the maximum extent practicable, all new bus route identification signs shall comply with 4.30.2 and 4.30.3. Signs

that are sized to the maximum dimensions permitted under legitimate local, state or federal regulations or ordinances shall be considered in compliance with 4.30.2 and 4.30.3 for purposes of this section.

EXCEPTION: Bus schedules, timetables, or maps that are posted at the bus stop or bus bay are not required to comply with this provision.

10.2.2 Bus Stop Siting and Alterations.

(1) Bus stop sites shall be chosen such that, to the maximum extent practicable, the areas where lifts or ramps are to be deployed comply with section 10.2.1(1) and (2).

(2) When new bus route identification signs are installed or old signs are replaced, they shall comply with the requirements of 10.2.1(3).

10.3 Fixed Facilities and Stations.

10.3.1 New Construction. New stations in rapid rail, light rail, commuter rail, intercity bus, intercity rail, high speed rail, and other fixed guideway systems (e.g., automated guideway transit, monorails, etc.) shall comply with the following provisions, as applicable:

(1) Elements such as ramps, elevators or other circulation devices, fare vending or other ticketing areas, and fare collection areas shall be placed to minimize the distance which wheelchair users and other persons who cannot negotiate steps may have to travel compared to the general public. The circulation path, including an accessible entrance and an accessible route, for persons with disabilities shall, to the maximum extent practicable, coincide with the circulation path for the general public. Where the circulation path is different, signage complying with 4.30.1, 4.30.2, 4.30.3, 4.30.5, and 4.30.7(1) shall be provided to indicate direction to and identify the accessible entrance and accessible route.

(2) In lieu of compliance with 4.1.3(8), at least one entrance to each station shall comply with 4.14, Entrances. If different entrances to a station serve different transportation fixed routes or groups of fixed routes, at least one entrance serving each group or route shall comply with 4.14, Entrances. All accessible entrances shall, to the maximum extent practicable, coincide with those used by the majority of the general public.

(3) Direct connections to commercial, retail, or residential facilities shall have an accessible route complying with 4.3 from the point of connection to boarding platforms and all transportation system elements used by the public. Any elements provided to facilitate future direct connections shall be on an accessible route connecting boarding platforms and all transportation system elements used by the public.

(4) Where signs are provided at entrances to stations identifying the station or the entrance, or both, at least one sign at each entrance shall comply with 4.30.4 and 4.30.6. Such signs shall be placed in uniform locations at entrances within the transit system to the maximum extent practicable.

EXCEPTION: Where the station has no defined entrance, but signage is provided, then the accessible signage shall be placed in a central location.

(5) Stations covered by this section shall have identification signs complying with 4.30.1, 4.30.2, 4.30.3, and 4.30.5. Signs shall be placed at frequent intervals and shall be clearly visible from within the vehicle on both sides when not obstructed by another train. When station identification signs are placed close to vehicle windows (i.e., on the side opposite from boarding) each shall have the top of the highest letter or symbol below the top of the vehicle window and the bottom of the lowest letter or symbol above the horizontal mid-line of the vehicle window.

(6) Lists of stations, routes, or destinations served by the station and located on boarding areas, platforms, or mezzanines shall comply with 4.30.1, 4.30.2, 4.30.3, and 4.30.5. A minimum of one sign identifying the specific station and complying with 4.30.4 and 4.30.6 shall be provided on each platform or boarding area. All signs referenced in this paragraph shall, to the maximum extent practicable, be placed in uniform locations within the transit system.

10.3 Fixed Facilities and Stations

(7)* Automatic fare vending, collection and adjustment (e.g., add-fare) systems shall comply with 4.34.2, 4.34.3, 4.34.4, and 4.34.5. At each accessible entrance such devices shall be located on an accessible route. If self-service fare collection devices are provided for the use of the general public, at least one accessible device for entering, and at least one for exiting, unless one device serves both functions, shall be provided at each accessible point of entry or exit. Accessible fare collection devices shall have a minimum clear opening width of 32 inches; shall permit passage of a wheelchair; and, where provided, coin or card slots and controls necessary for operation shall comply with 4.27. Gates which must be pushed open by wheelchair or mobility aid users shall have a smooth continuous surface extending from 2 inches above the floor to 27 inches above the floor and shall comply with 4.13. Where the circulation path does not coincide with that used by the general public, accessible fare collection systems shall be located at or adjacent to the accessible point of entry or exit.

(8) Platform edges bordering a drop-off and not protected by platform screens or guard rails shall have a detectable warning. Such detectable warnings shall comply with 4.29.2 and shall be 24 inches wide running the full length of the platform drop-off.

(9) In stations covered by this section, rail-to-platform height in new stations shall be coordinated with the floor height of new vehicles so that the vertical difference, measured when the vehicle is at rest, is within plus or minus 5/8 inch under normal passenger load conditions. For rapid rail, light rail, commuter rail, high speed rail, and intercity rail systems in new stations, the horizontal gap, measured when the new vehicle is at rest, shall be no greater than 3 inches. For slow moving automated guideway "people mover" transit systems, the horizontal gap in new stations shall be no greater than 1 inch.

EXCEPTION 1: Existing vehicles operating in new stations may have a vertical difference with respect to the new platform within plus or minus 1-1/2 inches.

EXCEPTION 2: In light rail, commuter rail and intercity rail systems where it is not operationally or structurally feasible to meet the horizontal gap or vertical difference requirements, mini-high platforms, car-borne or platform-mounted lifts, ramps or bridge plates, or similar manually deployed devices, meeting the applicable requirements of 36 CFR part 1192, or 49 CFR part 38 shall suffice.

(10) Stations shall not be designed or constructed so as to require persons with disabilities to board or alight from a vehicle at a location other than one used by the general public.

(11) Illumination levels in the areas where signage is located shall be uniform and shall minimize glare on signs. Lighting along circulation routes shall be of a type and configuration to provide uniform illumination.

(12) Text Telephones: The following shall be provided in accordance with 4.31.9:

(a) If an interior public pay telephone is provided in a transit facility (as defined by the Department of Transportation) at least one interior public text telephone shall be provided in the station.

(b) Where four or more public pay telephones serve a particular entrance to a rail station and at least one is in an interior location, at least one interior public text telephone shall be provided to serve that entrance. Compliance with this section constitutes compliance with section 4.1.3(17)(c).

(13) Where it is necessary to cross tracks to reach boarding platforms, the route surface shall be level and flush with the rail top at the outer edge and between the rails, except for a maximum 2-1/2 inch gap on the inner edge of each rail to permit passage of wheel flanges. Such crossings shall comply with 4.29.5. Where gap reduction is not practicable, an above-grade or below-grade accessible route shall be provided.

(14) Where public address systems are provided to convey information to the public in terminals, stations, or other fixed facilities, a means of conveying the same or equivalent information to persons with hearing loss or who are deaf shall be provided.

10.3.2 Existing Facilities: Key Stations.

(15) Where clocks are provided for use by the general public, the clock face shall be uncluttered so that its elements are clearly visible. Hands, numerals, and/or digits shall contrast with the background either light-on-dark or dark-on-light. Where clocks are mounted overhead, numerals and/or digits shall comply with 4.30.3. Clocks shall be placed in uniform locations throughout the facility and system to the maximum extent practicable.

(16) Where provided in below grade stations, escalators shall have a minimum clear width of 32 inches. At the top and bottom of each escalator run, at least two contiguous treads shall be level beyond the comb plate before the risers begin to form. All escalator treads shall be marked by a strip of clearly contrasting color, 2 inches in width, placed parallel to and on the nose of each step. The strip shall be of a material that is at least as slip resistant as the remainder of the tread. The edge of the tread shall be apparent from both ascending and descending directions.

(17) Where provided, elevators shall be glazed or have transparent panels to allow an unobstructed view both in to and out of the car. Elevators shall comply with 4.10.

EXCEPTION: Elevator cars with a clear floor area in which a 60 inch diameter circle can be inscribed may be substituted for the minimum car dimensions of 4.10, Fig. 22.

(18) Where provided, ticketing areas shall permit persons with disabilities to obtain a ticket and check baggage and shall comply with 7.2.

(19) Where provided, baggage check-in and retrieval systems shall be on an accessible route complying with 4.3, and shall have space immediately adjacent complying with 4.2. If unattended security barriers are provided, at least one gate shall comply with 4.13. Gates which must be pushed open by wheelchair or mobility aid users shall have a smooth continuous surface extending from 2 inches above the floor to 27 inches above the floor.

10.3.2 Existing Facilities: Key Stations.

(1) Rapid, light and commuter rail key stations, as defined under criteria established by the Department of Transportation in subpart C of 49 CFR part 37 and existing intercity rail stations shall provide at least one accessible route from an accessible entrance to those areas necessary for use of the transportation system.

(2) The accessible route required by 10.3.2(1) shall include the features specified in 10.3.1 (1), (4)-(9), (11)-(15), and (17)-(19).

(3) Where technical infeasibility in existing stations requires the accessible route to lead from the public way to a paid area of the transit system, an accessible fare collection system, complying with 10.3.1(7), shall be provided along such accessible route.

(4) In light rail, rapid rail and commuter rail key stations, the platform or a portion thereof and the vehicle floor shall be coordinated so that the vertical difference, measured when the vehicle is at rest, is within plus or minus 1-1/2 inches under all normal passenger load conditions, and the horizontal gap, measured when the vehicle is at rest, is no greater than 3 inches for at least one door of each vehicle or car required to be accessible by 49 CFR part 37.

EXCEPTION 1: Existing vehicles retrofitted to meet the requirements of 49 CFR 37.93 (one-car-per-train rule) shall be coordinated with the platform such that, for at least one door, the vertical difference between the vehicle floor and the platform, measured when the vehicle is at rest with 50% normal passenger capacity, is within plus or minus 2 inches and the horizontal gap is no greater than 4 inches.

EXCEPTION 2: Where it is not structurally or operationally feasible to meet the horizontal gap or vertical difference requirements, mini-high platforms, car-borne or platform mounted lifts, ramps or bridge plates, or similar manually deployed devices, meeting the applicable requirements of 36 CFR part 1192, or 49 CFR part 38, shall suffice.

(5) New direct connections to commercial, retail, or residential facilities shall, to the maximum extent feasible, have an accessible route complying with 4.3 from the point of connection to boarding platforms and all transportation system elements used by the public. Any elements provided to facilitate future direct connections shall be on an accessible route connecting boarding platforms and all transportation system elements used by the public.

10.3.3 Existing Facilities: Alterations.

(1) For the purpose of complying with 4.1.6(2) (Alterations to an Area Containing a Primary Function), an area of primary function shall be as defined by applicable provisions of 49 CFR 37.43(c) (Department of Transportation's ADA Rule) or 28 CFR 36.403 (Department of Justice's ADA Rule).

10.4 Airports.

10.4.1 New Construction.

(1) Elements such as ramps, elevators or other vertical circulation devices, ticketing areas, security checkpoints, or passenger waiting areas shall be placed to minimize the distance which wheelchair users and other persons who cannot negotiate steps may have to travel compared to the general public.

(2) The circulation path, including an accessible entrance and an accessible route, for persons with disabilities shall, to the maximum extent practicable, coincide with the circulation path for the general public. Where the circulation path is different, directional signage complying with 4.30.1, 4.30.2, 4.30.3 and 4.30.5 shall be provided which indicates the location of the nearest accessible entrance and its accessible route.

(3) Ticketing areas shall permit persons with disabilities to obtain a ticket and check baggage and shall comply with 7.2.

(4) Where public pay telephones are provided, and at least one is at an interior location, a public TTY shall be provided in compliance with 4.31.9. Additionally, if four or more public pay telephones are located in any of the following locations, at least one public TTY shall also be provided in that location:

(a) a main terminal outside the security areas;

(b) a concourse within the security areas; or

(c) a baggage claim area in a terminal.

Compliance with this section constitutes compliance with section 4.1.3(17)(c).

(5) Baggage check-in and retrieval systems shall be on an accessible route complying with 4.3, and shall have space immediately adjacent complying with 4.2.4. If unattended security barriers are provided, at least one gate shall comply with 4.13. Gates which must be pushed open by wheelchair or mobility aid users shall have a smooth continuous surface extending from 2 in (50 mm) above the floor to 27 in (685 mm) above the floor.

(6) Terminal information systems which broadcast information to the general public through a public address system shall provide a means to provide the same or equivalent information to persons with a hearing loss or who are deaf. Such methods may include, but are not limited to, visual paging systems using video monitors and computer technology. For persons with certain types of hearing loss such methods may include, but are not limited to, an assistive listening system complying with 4.33.7.

(7) Where clocks are provided for use by the general public the clock face shall be uncluttered so that its elements are clearly visible. Hands, numerals, and/or digits shall contrast with their background either light-on-dark or dark-on-light. Where clocks are mounted overhead, numerals and/or digits shall comply with 4.30.3. Clocks shall be placed in uniform locations throughout the facility to the maximum extent practicable.

(8)* Security Systems. In airports covered by title II of the ADA, at least one accessible route complying with 4.3 shall be provided through fixed security barriers at each single barrier or group of security barriers. A group is two or more security barriers immediately adjacent to each other at a single location. Where security barriers incorporate equipment such as metal detectors, fluoroscopes, or other similar devices which cannot be made acces-

sible, an accessible route shall be provided adjacent to such security screening devices to facilitate an equivalent path of travel. The path of travel shall permit persons with disabilities passing through security barriers to maintain visual contact with their personal items to the same extent provided other members of the general public.

EXCEPTION: Doors, doorways, and gates designed to be operated only by security personnel shall be exempt from 4.13.6, 4.13.9, 4.13.11, and 4.13.12.

10.5 Boat and Ferry Docks. (Reserved).

11. JUDICIAL, LEGISLATIVE AND REGULATORY FACILITIES.

11.1* General. In addition to the requirements in 4.1 through 4.35, judicial, legislative and regulatory facilities shall comply with 11. All public and common use areas are required to be designed and constructed to comply with section 4.

11.2 Courtrooms, Hearing Rooms, and Chambers.

11.2.1 Where the following elements are provided, each shall be on an accessible route that complies with 4.3 and coincides with the circulation path provided for all persons using the element and shall comply with the following provisions. Those elements covered in 11.2.1(4) (which are designed to be adaptable) must be located on an accessible route at the time they are adapted.

(1) Doors or Gates. Doors or gates designed to allow passage into the well of the courtroom, the witness stand, the jury box, the speaker's rostrum, or other areas shall comply with 4.13.

(2)* Jury Boxes and Witness Stands. Each jury box and witness stand shall have at least one accessible wheelchair space complying with 4.33.2. Readily removable seats may be installed in wheelchair spaces when the spaces are not required to accommodate wheelchair users. Accessible spaces shall be provided in the defined area of the jury box and witness stand. Fixed counters in the witness stand shall comply with 4.32. A 30 in by 48 in (760 mm by 1220 mm) clear floor space for a forward position shall be provided at each jury box and witness stand. An unobstructed turning space complying with 4.2.3 shall be provided serving each area. Where provided for use by the witness or juror, controls and operating mechanisms shall comply with 4.27.3 and 4.27.4 except that the maximum height of controls and operating mechanisms shall be 48 in (1220 mm).

EXCEPTION: In alterations to existing facilities where it is technically infeasible to provide a fixed means of vertical access to the witness stand and jury box, clear floor space shall be provided to accommodate a portable ramp complying with 4.8 or a portable lift complying with 4.11 as long as jurors or witnesses with disabilities are inside the defined area of the jury box and witness stand. In alterations, ramps may comply with 4.1.6(3)(a).

(3) Spectator, Press, and Other Areas with Fixed Seats. Where spectator, press or other areas with fixed seats are provided, each area shall comply with 4.1.3(19)(a). In addition, where the spectator seating capacity exceeds 50 and is located on one level that is not tiered or sloped, wheelchair spaces shall be provided in more than one seating row.

(4)* Fixed Judges' Benches, and Clerks' Stations. Fixed judges' benches, and clerks' stations shall be accessible or adaptable and comply with 4.32. A 30 in by 48 in (760 mm by 1220 mm) clear floor space for a forward position shall be provided at each accessible bench or station. An unobstructed turning space complying with 4.2.3 shall be provided serving each area. Controls and operating mechanisms shall comply with 4.27.3 and 4.27.4 except that the maximum height of controls and operating mechanisms shall be 48 in (1220 mm). If the high forward reach is over an obstruction, reach and clearances shall be as shown in Fig. 5(b).

Adaptable means that maneuvering clearances and other features (e.g., fixed controls) shall be designed into the space so that accessibility can easily be provided. For example, the judge's bench may be designed so that a ramp complying with 4.8 or a lift complying with 4.11 can easily be installed at a later date provided that the required maneuvering clearances are provided to approach, enter, and exit the ramp or lift. Maneuvering clearances must

also allow an individual to open gates, maneuver at the bench (e.g., knee clearance), and reach any fixed controls (e.g., alarm buttons) and electrical outlets that are integral components of the design.

(5)* Fixed Bailiffs' Stations, Court Reporters' Stations, Litigants' and Counsel Stations. Fixed or built-in stations, including tables for bailiffs, court reporters, litigants and counsel shall comply with 4.32. A 30 in by 48 in (760 mm by 1220 mm) clear floor space for a forward position shall be provided at each accessible station. Controls and operating mechanisms shall comply with 4.27.3 and 4.27.4 except that the maximum height of controls and operating mechanisms shall be 48 in (1220 mm). If the high forward reach is over an obstruction, reach and clearances shall be as shown in Fig. 5(b).

(6) Fixed Lecterns. Fixed lecterns shall provide adjustable heights. At least one height shall be from 28 in to 34 in (710 mm to 865 mm) above the finish floor and provide knee space at least 27 in (685 mm) high, 30 in (760 mm) wide, and 19 in (485 mm) deep. A 30 in by 48 in (760 mm by 1220 mm) clear floor space for a forward position shall be provided. Controls and operating mechanisms shall comply with 4.27.3 and 4.27.4 except that the maximum height of controls and operating mechanisms shall be 48 in (1220 mm).

(7) Fixed Speakers' Rostrums and Daises. Fixed speakers' rostrums and at least one dais shall be accessible and comply with 4.32. A 30 in by 48 in (760 mm by 1220 mm) clear floor space for a forward position shall be provided at each accessible rostrum and dais. An unobstructed turning space complying with 4.2.3 shall be provided serving each area.

11.3 Jury Assembly Areas and Jury Deliberation Areas.

11.3.1 Where provided in areas used for jury assembly or deliberation, the following elements or spaces shall be on an accessible route complying with 4.3 and shall comply with the following provisions:

(1) Refreshment Areas. Refreshment areas, kitchenettes and fixed or built-in refreshment dispensers and vending machines shall comply with the technical provisions of 9.2.2(7).

(2)* Fixed or Built-in Seating and Tables. At least five percent, but not less than one, of fixed or built-in seating and tables shall comply with 4.32. Readily removable seats may be installed in wheelchair spaces when the spaces are not required to accommodate wheelchair users.

(3) Drinking Fountains. Where provided in rooms covered under 11.3, there shall be a drinking fountain accessible to individuals who use wheelchairs in accordance with 4.15 and one accessible to those who have difficulty bending or stooping. This can be accomplished by the use of a "hi-lo" fountain; by providing one fountain accessible to those who use wheelchairs and one fountain at a standard height convenient for those who have difficulty bending; by providing a fountain accessible under 4.15 and a water cooler; or by other such means as would achieve the required accessibility for each group.

11.4 Courthouse Holding Facilities.

11.4.1 Holding Cells - Minimum Number. Where provided, facilities for detainees, including central holding cells and court-floor holding cells, shall comply with the following:

(1) Central Holding Cells. Where separate central holding cells are provided for adult male, juvenile male, adult female, and juvenile female, one of each type shall comply with 11.4. Where central-holding cells are provided, which are not separated by age or sex, at least one cell complying with 11.4 shall be provided.

(2) Court-Floor Holding Cells. Where separate court-floor holding cells are provided for adult male, juvenile male, adult female, and juvenile female, one of each type shall comply with 11.4. Where court-floor holding cells are provided, and are not separated by age or sex, courtrooms shall be served by at least one cell complying with 11.4.

11.4.2 Requirements for Accessible Cells. Accessible cells shall be on an accessible route complying with 4.3. Where provided, the following elements or spaces serving accessible cells shall be accessible and on an accessible route:

(1) Doors and Doorways. All doors and doorways to accessible spaces and on an accessible route shall comply with 4.13.

11.4.3* Visiting Areas

EXCEPTION: Doors and doorways designed to be operated only by security personnel shall be exempt from 4.13.6, 4.13.9, 4.13.10, 4.13.11 and 4.13.12.

(2)* Restrooms. Toilet facilities shall comply with 4.22 and bathing facilities shall comply with 4.23. Privacy screens shall not intrude on the clear floor space required for fixtures or the accessible route.

(3)* Beds. Beds shall have maneuvering space at least 36 in (915 mm) wide along one side. Where more than one bed is provided in a cell, the maneuvering space provided at adjacent beds may overlap.

(4) Drinking Fountains and Water Coolers. Drinking fountains shall be accessible to individuals who use wheelchairs in accordance with 4.15 and shall be accessible to those who have difficulty bending or stooping. This can be accomplished by the use of a "hi-lo" fountain; by providing one fountain accessible to those who use wheelchairs and one fountain at a standard height convenient for those who have difficulty bending; by providing a fountain accessible under 4.15 and a water cooler; or by other such means as would achieve the required accessibility for each group.

(5) Fixed or Built-in Seating and Tables. Fixed or built-in seating, tables or counters shall comply with 4.32.

(6) Fixed Benches. Fixed benches shall be mounted at 17 in to 19 in (430 mm to 485 mm) above the finish floor. The structural strength of the bench attachments shall comply with 4.26.3.

11.4.3* Visiting Areas. The following elements, where provided, shall be located on an accessible route complying with 4.3 and shall comply with the following provisions:

(1) Cubicles and Counters. At least five percent, but not less than one, of fixed cubicles shall be accessible according to 4.32 on both the visitor and detainee sides. Where counters are provided, a portion at least 36 in (915 mm) in length shall comply with 4.32 on both the visitor and detainee sides.

(2) Partitions. Solid partitions or security glazing that separate visitors from detainees shall comply with 7.2(3).

11.5 Restricted and Secured Entrances. Where provided, at least one restricted entrance and one secured entrance to the facility shall be accessible in addition to the entrances required by 4.1.3(8). Such entrances shall be connected by an accessible route complying with 4.3 to all accessible spaces or elements within the building or facility and comply with the following:

(1) Restricted Entrances. Restricted entrances are used by judges, court personnel and other authorized parties on a controlled basis. The accessible restricted entrance shall be connected by an accessible route to public transportation stops, to accessible parking and passenger loading zones and to public streets or sidewalks if available (see 4.3.2(1)). In addition, if direct access is provided for pedestrians from an enclosed parking garage to a restricted entrance, at least one direct entrance from the garage to the restricted entrance shall be accessible.

(2) Secured Entrances. Secured entrances are used by detainees and detention officers. Where provided, passenger loading zones for detainees shall comply with 4.6.6.

EXCEPTION: At secured entrances, doors and doorways designed to be operated only by security personnel shall be exempt from 4.13.6, 4.13.9, 4.13.10, 4.13.11 and 4.13.12.

11.6 Security Systems. An accessible route complying with 4.3 shall be provided through fixed security barriers at required accessible entrances. Where security barriers incorporate equipment such as metal detectors, fluoroscopes, or other similar devices which cannot be made accessible, an accessible route shall be provided adjacent to such security screening devices to facilitate an equivalent path of travel.

11.7* Two-Way Communication Systems. Where a two-way communication system is provided to gain admittance to a facility or to restricted areas within the facility, the system shall provide both visible and audible signals and shall comply with 4.27.

11.8* Electrical Outlets, Wiring, and Conduit for Communication Systems

11.8* Electrical Outlets, Wiring, and Conduit for Communication Systems.

(1) In judicial, legislative, or regulatory facilities, all courtrooms, hearing rooms, jury deliberation and jury orientation rooms, and meeting rooms designated for public use shall be provided with the following to support communication equipment for persons with disabilities:

(a) Electrical outlets; and

(b) Wiring, conduit, or raceways.

(2) Within the courtroom, electrical outlets and wiring, conduit, or raceways shall be provided to serve each litigant and counsel station, clerk station, court reporter station, jury box, witness stand, judge's bench and spectator area.

(3) These electrical outlets shall be provided in addition to those convenience outlets required by applicable State or local codes.

11.9* Permanently Installed Assistive Listening Systems. Permanently installed assistive listening systems complying with 4.33.6 and 4.33.7 shall be provided in judicial, legislative and regulatory facilities as follows:

(1)* Judicial Facilities. In judicial facilities, 50 percent, but not less than one, of each type of courtroom (at least one of which shall have a jury box, where one is provided) shall have a permanently installed assistive listening system. In addition, 50 percent, but not less than one, of each of the following types of rooms shall have a permanently installed assistive listening system: hearing rooms, jury deliberation rooms, and jury orientation rooms.

(2)* Legislative and Regulatory Facilities. In legislative and regulatory facilities, 50 percent, but not less than one, of each of the following types of rooms shall have a permanently installed assistive listening system: chambers, and hearing or meeting rooms which are designated for public use and where legislative or regulatory business is conducted. In addition, where separate chambers are provided for a bicameral legislature (i.e., house and senate), each chamber shall have a permanently installed assistive listening system.

(3) Receivers. The minimum number of receivers shall be four percent, but not less than two, of the room occupant load, as determined by applicable State or local codes.

(4) Signage. An informational sign complying with 4.30.1, 4.30.2, 4.30.3, 4.30.5 and 4.30.7(4) shall be posted in a prominent place indicating the availability of assistive listening systems, computer-aided transcription system, or other communication equipment for persons with vision or hearing impairments.

12. DETENTION AND CORRECTIONAL FACILITIES.

12.1* General. This section applies to jails, holding cells in police stations, prisons, juvenile detention centers, reformatories, and other institutional occupancies where occupants are under some degree of restraint or restriction for security reasons. Except as specified in this section, detention and correctional facilities shall comply with the applicable requirements of 4.1 through 4.35. All common use areas serving accessible cells or rooms and all public use areas are required to be designed and constructed to comply with section 4.

EXCEPTION: In detention and correctional facilities the requirements for areas of rescue assistance in 4.1.3(9), 4.3.10, and 4.3.11 do not apply. In addition, the requirements of 4.1.3(16) apply only to public use areas.

12.2 Entrances.

12.2.1 Public Entrances. Entrances used by the public, including those that are secured, shall be accessible as required by 4.1.3(8). Public entrances are those entrances used by the general public, including those used by both visitors and inmates or detainees.

EXCEPTION: Entrances, doors and doorways designed to be operated only by security personnel shall be exempt from 4.13.6, 4.13.9, 4.13.10, 4.13.11 and 4.13.12. Doors and doorways not operated solely by security personnel which are subject to security requirements that prohibit full compliance with these provisions shall comply to the maximum extent feasible.

12.2.2 Other Entrances

12.2.2 Other Entrances. Where entrances used by inmates or detainees and not the general public are provided, at least one such entrance shall comply with 4.14. This requirement is in addition to the entrances that are required to be accessible by 4.1.3(8). Where provided, passenger loading zones serving entrances subject to this provision shall comply with 4.6.6.

EXCEPTION: Entrances, doors and doorways designed to be operated only by security personnel shall be exempt from 4.13.6, 4.13.9, 4.13.10, 4.13.11 and 4.13.12. Doors and doorways not operated solely by security personnel that are subject to security requirements that prohibit full compliance with these provisions shall comply to the maximum extent feasible. Entrances subject to 4.14 are not required to be connected by an accessible route to public transportation stops, accessible parking, or public streets or sidewalks.

12.2.3 Security Systems. Where security systems are provided at public or other entrances required to be accessible by 12.2.1 or 12.2.2, an accessible route complying with 4.3 shall be provided through fixed security barriers. Where security barriers incorporate equipment such as metal detectors, fluoroscopes, or other similar devices which cannot be made accessible, an accessible route shall be provided adjacent to such security screening devices to facilitate an equivalent path of travel.

12.3* Visiting Areas. In non-contact visiting areas where inmates or detainees are separated from visitors, the following elements, where provided, shall be accessible and located on an accessible route complying with 4.3:

(1) Cubicles and Counters. Five percent, but not less than one, of fixed cubicles shall be accessible according to 4.32 on both the visitor and detainee or inmate sides. Where counters are provided, a portion at least 36 in (915 mm) in length shall comply with 4.32 on both the visitor and detainee or inmate sides.

EXCEPTION: At non-contact visiting areas not serving accessible cells or rooms, the requirements of 12.3(1) do not apply to cubicles or counters serving detainees or inmates.

(2) Partitions. Solid partitions or security glazing separating visitors from inmates or detainees shall comply with 7.2(3).

12.4 Holding and Housing Cells or Rooms: Minimum Number and Dispersion.

12.4.1* Holding Cells and General Housing Cells or Rooms.

(1) Minimum Number. At least three percent, but not less than one, of the total number of housing or holding cells or rooms provided in a facility shall comply with 12.5.

(2) Dispersion. Accessible cells or rooms complying with 12.5 shall be dispersed among all categories and types of general housing and holding areas. This does not require an increase in the minimum number specified by 12.4.1(1), nor does it require proportionate distribution of accessible cells among different categories or types of cells.

12.4.2 Special Holding and Housing Cells or Rooms. In addition to the requirements of 12.4.1, where special holding or housing cells or rooms are provided, at least one serving each purpose shall comply with 12.5. An accessible special holding or housing cell or room may serve more than one purpose. Cells or rooms subject to this requirement include, but are not limited to, those used for purposes of protective custody, disciplinary detention, detoxification, and medical isolation.

12.4.3* Accessible Cells or Rooms for Persons with Hearing Impairments. In addition to the requirements of 12.4.1, at least three percent, but not less than one, of general housing or holding cells or rooms equipped with audible emergency warning systems or permanently installed telephones within the cell or room shall comply with the applicable requirements of 12.6.

12.4.4* Medical Care Facilities. Medical care facilities providing physical or medical treatment or care shall comply with the applicable requirements of 6.1, 6.3 and 6.4, if persons may need assistance in emergencies and the period of stay may exceed 24 hours. Patient bedrooms or cells required to be accessible under 6.1 and 6.3 shall be provided in addition to any medical isolation cells required to be accessible under 12.4.2.

12.4.5 Alterations to Cells or Rooms. When holding or general housing cells or rooms are being altered in an existing facility, or portion thereof, at least three percent of the number being altered shall be made accessible according to 12.4.1 until the number of accessible cells or rooms equals the total number of accessible cells or rooms required for the facility under 12.4.1.

12.5 Requirements for Accessible Cells or Rooms.

12.5.1 General. Cells or rooms required to be accessible by 12.4 shall comply with 12.5.

12.5.2 Minimum Requirements. Accessible cells or rooms shall be on an accessible route complying with 4.3. Where provided within housing or holding cells or rooms, the following elements or spaces shall be accessible and connected by an accessible route.

(1) Doors and Doorways. All doors and doorways on an accessible route shall comply with 4.13.

EXCEPTION: Doors and doorways designed to be operated only by security personnel shall be exempt from 4.13.6, 4.13.9, 4.13.10, 4.13.11 and 4.13.12. Other doors and doorways not operated solely by security personnel which are subject to security requirements that prohibit full compliance with these provisions shall comply to the maximum extent feasible.

(2)* Restrooms. At least one toilet facility shall comply with 4.22 and one bathing facility shall comply with 4.23. Privacy screens shall not intrude on the clear floor space required for fixtures and the accessible route.

(3)* Beds. Beds shall have maneuvering space at least 36 in (915 mm) wide along one side. Where more than one bed is provided in a room or cell, the maneuvering space provided at adjacent beds may overlap.

(4) Drinking Fountains and Water Coolers. Drinking fountains shall be accessible to individuals who use wheelchairs in accordance with 4.15 and shall be accessible to those who have difficulty bending or stooping. This can be accomplished by the use of a "hi-lo" fountain; by providing one fountain accessible to those who use wheelchairs and one fountain at a standard height convenient for those who have difficulty bending; by providing a fountain accessible under 4.15 and a water cooler; or by providing other such means as would achieve the required accessibility for each group.

(5) Fixed or Built-in Seating or Tables. Fixed or built-in seating, tables and counters shall comply with 4.32.

(6) Fixed Benches. Fixed benches shall be mounted at 17 in to 19 in (430 mm to 485 mm) above the finish floor. The structural strength of the bench attachments shall comply with 4.26.3.

(7) Storage. Fixed or built-in storage facilities such as cabinets, shelves, closets, and drawers, shall contain storage space complying with 4.25.

(8) Controls. All controls intended for operation by inmates shall comply with 4.27.

(9) Accommodations for persons with hearing impairments required by 12.4.3 and complying with 12.6 shall be provided in accessible cells or rooms.

12.6 Visible Alarms and Telephones.

12.6.1 General. Where audible emergency warning systems are provided to serve the occupants of holding or housing cells or rooms, visible alarms complying with 4.28.4 shall be provided. Where permanently installed telephones are provided within holding or housing cells or rooms, they shall have volume controls complying with 4.31.5.

EXCEPTION: Visible alarms are not required where inmates or detainees are not allowed independent means of egress.

12.6.2* Equivalent Facilitation. For purposes of this section, equivalent facilitation shall include the installation of electrical outlets (including outlets connected to a facility's central alarm system) and telephone wiring in the cell or room to enable inmates or detainees with hearing impairments to utilize portable visible alarms and communication devices made available by the operator of the facility.

13.0 Accessible Residential Housing

13. ACCESSIBLE RESIDENTIAL HOUSING.

13.1 General.

(1) This section applies to newly constructed or altered residential housing facilities containing single-family and/or multifamily dwelling units subject to title II of the ADA. For purposes of this section, the term "dwelling unit" means a single unit containing rooms and spaces for living, bathing and sleeping and which may provide a kitchen or food preparation area. This section does not apply to transient lodging facilities covered by section 9.

(2) Except as specified in this section, accessible residential housing shall comply with the applicable requirements of 4.1 through 4.35. All public and common use areas shall be designed and constructed to comply with section 4.1 through 4.35. "Public use areas" pertains to interior or exterior spaces of a building or facility that are made available to the general public. As used in this section, "common use areas" means rooms, spaces or elements inside or outside of a building or facility that are made available solely for the use of residents of a building or facility or their guests. Common use areas may include, but are not limited to, hallways, lounges, lobbies, laundry rooms, kitchens outside dwelling units for tenant use, refuse rooms, mail rooms, recreational areas, storage areas, areas used for official functions and walks among and between buildings. The term "common use" excludes spaces wholly within a dwelling unit.

EXCEPTION 1: Elevators are not required in residential facilities that are less than four stories provided that the requirements of 13.1(2), 13.2 and 13.3 are satisfied.

EXCEPTION 2*: Where multiple recreational facilities, such as tennis courts, are provided for common use only, at least one of each type shall be designed and constructed to comply with section 4.

13.2 Minimum Number and Dispersion.

13.2.1* New Construction: Minimum Number. Accessible dwelling units shall be provided as follows:

(1) Five percent of the total number of dwelling units in a facility, but not less than one, shall comply with 13.3 and 13.4. In a facility with more than two dwelling units, 25 percent, but not less than one, of the dwelling units required to be accessible and complying with 13.3 and 13.4, shall have a roll-in shower complying with 4.21.

(2) In addition to those dwelling units required to be accessible by 13.2.1(1), two percent of the total number of dwelling units in a facility, but not less than one, shall comply with 13.4. This paragraph does not require an increase in the total number of dwelling units planned for a facility. If the total number of dwelling units is one, that dwelling unit shall meet the requirements of 13.2.1(1).

(3) Where special purpose residences are provided for specific employee positions and are not interchangeable (e.g., Governors' mansions and university Presidents' residences) each shall comply with 13.2.1(1). Where such residences are interchangeable, five percent, or at least one shall be accessible.

13.2.2* New Construction: Dispersion.

(1) Accessible dwelling units shall be dispersed throughout the facility so as to provide people with disabilities a choice of housing types comparable to and integrated with those available to other members of the public. In dispersing accessible units, the following factors are to be considered: vertical dispersion in buildings where elevators are provided; unit size; rental or sale price; amenities provided within dwelling units; and the availability and proximity of amenities serving dwelling units.

(2) When units of different size in terms of number of bedrooms are provided, at least one of each unit shall comply with 13.2.1(1). In dispersing units according to the number of bedrooms provided, compliance with this provision is required regardless of whether it is necessary to exceed the number required to be accessible by 13.2.1(1) unless doing so will require the installation of an elevator where one was not planned. If the number required in 13.2.1(1) has not been met, units shall be dispersed throughout the facility according to the number of bedrooms provided to the maximum extent feasible.

13.2.3* Alterations: Minimum Number and Dispersion.

(1) Minimum Number: When dwelling units are altered in an existing facility, five percent, but not less than one, of the dwelling units altered shall comply with the requirements of 13.3 and 13.4 for each alteration until the number of accessible dwelling units in each facility equals the number required to be accessible by 13.2.1(1). In addition, two percent but not less than one of the altered dwelling units shall comply with the requirements of 13.4 until the number of accessible dwelling units equals the number required to be accessible by 13.2.1(2).

(2) Dispersion: When existing dwelling units are altered and are required to be accessible they shall be dispersed according to 13.2.2(1), to the maximum extent feasible.

13.3 Requirements for Accessible Dwelling Units.

13.3.1 General. The requirements of 13.3 apply to dwelling units required to be accessible by 13.2.1(1) and 13.2.3(1).

13.3.2* Minimum Requirements. An accessible dwelling unit shall be on an accessible route complying with 4.3 and shall have the following accessible elements and spaces:

(1) Ancillary Areas. Spaces and facilities serving individual accessible dwelling units, including but not limited to, entry walks, trash disposal facilities, storage areas, and mail boxes, where provided, shall comply with 4.1 through 4.35.

(2) Maneuvering Space. Accessible spaces shall have maneuvering space complying with 4.2.3 and surfaces complying with 4.5.

(3) Accessible Route. At least one accessible route complying with 4.3 shall connect the accessible entrances with all accessible spaces and elements within the accessible dwelling unit. This is not intended to require an elevator within an accessible dwelling unit as long as the spaces identified in 13.3.2(11), (12), and (13) are connected by an interior accessible route.

(4) Parking. Parking spaces shall comply with 4.6 and shall be provided in accordance with the following:

(a) Where parking is provided for residents, one accessible parking space shall be provided for each dwelling unit required to be accessible by 13.2.1(1). Van spaces shall be provided in compliance with 4.1.2(5)(b). If dwelling units are provided with more than one type of parking space (e.g., stalls, garages, or carports) then required parking spaces shall be distributed among the types.

(b) Where the total parking provided on a site exceeds one parking space per dwelling unit, not less than two percent, but no less than one space, of this additional parking shall be accessible. Van parking shall be provided in compliance with 4.1.2(5)(b).

EXCEPTION: Where parking spaces are assigned to specific dwelling units, the requirements for signage under 4.6.4 apply only during the tenancy of a person with a disability.

(5) Elevators. Elevators shall comply with 4.10.

EXCEPTION 1: An accessible private residence elevator complying with the following may be used in lieu of an elevator complying with 4.10 to connect levels within an individual dwelling unit:

(a) Independent Use and Operation. The elevator shall facilitate unassisted entry, operation, and exit from the elevator; and,

(b) Inside Dimension of Elevator Cars. Elevator cars shall provide a clear floor space in compliance with 4.2.4. Car gates and doors shall be positioned at the narrow end(s) of the clear floor space. The clearance between the car platform sill and any hoistway edge shall be 1-1/4 in (32 mm) maximum.

EXCEPTION 2: A platform lift complying with 4.11 may be used in lieu of an elevator complying with 4.10 to connect levels within an individual dwelling unit.

(6)* Doors. Doors intended for passage into and within accessible spaces shall comply with 4.13. Entry doors shall include peepholes for use by seated individuals, if peepholes are provided for other dwelling units in the facility.

13.3.3 Bathrooms

(7) Entrances. At least one accessible entrance to the dwelling unit shall comply with 4.14. Additional entrances, where provided, should comply with 4.14.

(8) Storage. At least one of each type of fixed or built-in storage facility in accessible spaces in dwelling units, including cabinets, shelves, closets, and drawers shall comply with 4.25. Storage cabinets in kitchens shall comply with 13.3.4(10).

(9) Controls. All controls in accessible spaces shall comply with 4.27. Electric circuit breaker panels and those portions of heating, ventilating, and air conditioning equipment requiring regular or periodic maintenance and adjustment by the resident of a dwelling unit shall comply with 4.27. Inaccessible controls are permitted where redundant controls complying with 4.27 are provided in close proximity.

EXCEPTION: This requirement shall not apply to controls on air distribution registers that are placed on or close to ceilings or floors.

(10) Alarms. If emergency warning systems are provided, they shall include audible alarms complying with 4.28.2 and visible alarms complying with 4.28.3.

(11) Bathrooms. At least one full bathroom shall comply with 13.3.3. A full bathroom shall include, at a minimum, a water closet and a lavatory, as well as a bathtub, or shower, or a combination tub and shower.

(12) Kitchens. If provided, the kitchen shall comply with 13.3.4.

(13) Living Spaces. The following spaces shall be accessible and shall be on an accessible route complying with 4.3:

(a) Living areas.

(b) Dining areas, if provided.

(c) Sleeping areas or bedrooms as follows:

(i) In dwelling units with one bedroom, one bedroom.

(ii) In dwelling units with more than one bedroom, at least two bedrooms.

(d) Carports and garages, serving the accessible dwelling unit and their routes or connections to the dwelling unit.

(e) Patios, decks, terraces, and balconies, serving accessible levels of the dwelling unit.

EXCEPTION: The requirements of 4.13.8 and 4.3.8 do not apply to patios, decks, terraces, or balconies where it is necessary to utilize a higher door threshold or a change in level to protect the integrity of the unit from wind or water damage. Where this exception results in level changes at patios, decks, terraces or balconies, equivalent facilitation shall be provided. Equivalent facilitation in residential housing may consist of providing raised decking or a ramp to provide accessibility.

(14) Laundry Facilities. Laundry facilities shall comply with 13.3.5 and shall be located on an accessible route complying with 4.3.

13.3.3 Bathrooms. Accessible bathrooms shall be on an accessible route and shall comply with the following:

(1) Doors. Doors to accessible bathrooms shall comply with 4.13. Doors shall not swing into the clear floor space required for any fixture unless the maneuvering space required by 13.3.3(8) is provided beyond the arc of the door swing within the room.

(2) Water Closets. Water closets shall comply with 4.16, except that the height of the water closet shall be between 15 in (380 mm) and 19 in (485 mm) measured to the top of the toilet seat.

(3) Lavatories and Mirrors. Lavatories and mirrors shall comply with 4.19. If medicine cabinets are provided, at least one shall be located with a usable shelf no higher than 44 in (1120 mm) above the floor. Clear floor space complying with 4.2.4 shall be provided at the medicine cabinet.

(4) Bathtubs. If a bathtub is provided, it shall comply with 4.20.

(5) Showers. If a shower is provided, it shall comply with 4.21.

(6) Bathtub and Shower Enclosures. Enclosures for bathtubs or shower stalls shall not obstruct controls or transfer from wheelchairs

onto shower or bathtub seats. Enclosures on bathtubs shall not have tracks mounted on the tub's rims.

(7) Fixtures and Controls. The accessible fixtures and controls required in an accessible bathroom shall be on an accessible route. The clear floor space at fixtures and controls and the accessible route may overlap.

(8) Maneuvering Space. Maneuvering space complying with 4.2.3 shall be provided.

13.3.4 Kitchens. If kitchens are provided within accessible dwelling units, or if separate kitchen facilities serve one or more accessible dwelling units, they shall comply with this section. Accessible kitchens and their components shall be designed to allow for the operation of cabinet and/or appliance doors so that all cabinets and appliances are accessible and usable. Accessible kitchens shall be on an accessible route complying with 4.3 and shall comply with the following:

(1) Maneuvering Clearance. Clearances between all opposing base cabinets, counter tops, appliances, or walls shall be 40 in (1015 mm) minimum, except in U-shaped kitchens, where such clearance shall be 60 in (1525 mm) minimum. A U-shaped kitchen is a closed end space having fixtures, storage or other usable elements on three sides.

(2) Clear Floor Space. A clear floor space complying with 4.2.4 that allows either a forward or a parallel approach shall be provided at fixtures and appliances. Such fixtures and appliances shall include, but are not limited to, the range or cooktop, oven, refrigerator/freezer, dishwasher, and trash compactor. Sinks shall have a forward approach. Laundry equipment located in the kitchen shall comply with 13.3.5.

(3) Controls. All controls in kitchens shall comply with 13.3.2(9).

(4) Counters. At least one 36 in (915 mm) length of counter shall provide a work surface that complies with the following requirements:

(a) The counter shall be mounted at a maximum height between 28 in to 34 in (710 mm to 865 mm) above the floor, measured from the floor to the top of the counter surface, or shall be adjustable to provide alternative heights of 28 in, 32 in, 34 in and 36 in (710 mm, 815 mm, 865 mm and 915 mm) measured from the floor to the top of the counter surface.

(b) Counter thickness and supporting structure shall be 2 in (50 mm) maximum over the required clear floor space.

(c) A clear floor space of 30 in by 48 in (760 mm by 1220 mm) shall allow a forward approach to the counter. Nineteen inches (485 mm) maximum of the clear floor space may extend underneath the counter. The knee space shall have a minimum clear width of 30 in (760 mm) and a minimum clear depth of 19 in (485 mm).

(d) There shall be no sharp or abrasive surfaces under such counters.

(5)* Sinks. The sink and its surrounding counter shall comply with 4.24. The sink may be adjustable to provide alternative heights of 28 in, 30 in, 32 in, 34 in, and 36 in (710 mm, 760 mm, 815 mm, 865 mm and 915 mm), measured from the floor to the top of the counter surface or sink rim. The total length of the sink and counter area shall be 30 in (760 mm) minimum. If the sink is adjustable, rough-in plumbing shall be located to accept connections of supply and drain pipes for alternative mounting heights.

(6)* Cooktops. If cooktops have knee spaces underneath, they shall be insulated or otherwise protected on the exposed contact surfaces to prevent burns, abrasions, or electric shock. The clear floor space may overlap the knee space, if provided, by 19 in (485 mm) maximum. The location of controls for cooktops shall not require reaching across burners.

(7)* Ovens. Ovens shall be of the self-cleaning type or be located adjacent to an accessible or adjustable height counter with knee space below. For side opening ovens, the door latch side shall be next to the open counter space, and there shall be a pull-out shelf under the oven extending the full width of the oven and not less than 10 in (255 mm) when fully extended. Wall ovens shall not have knee spaces underneath the oven. Ovens shall have controls on front panels and may be located on either side of the door.

13.3.5 Laundry Facilities

(8)* Refrigerators and Freezers. Provision shall be made for refrigerators which are:

(a) Of the vertical side-by-side refrigerator and freezer type; or

(b) Of the over-and-under type and have at least 50 percent of the freezer space no higher than 54 in (1370 mm) above the floor.

(c) Freezers with less than 100 percent of the storage volume within the limits specified in 4.2.5 and 4.2.6 shall be the self-defrosting type.

(d) Controls for refrigerator and freezer compartments shall comply with 4.2.5 and 4.2.6.

(9) Dishwashers. Dishwashers shall be front loading machines.

(10)* Kitchen Storage. Kitchen storage cabinets, drawers, and shelf areas shall have the following features:

(a) Maximum height shall be 48 in (1220 mm) for at least one shelf of all cabinets and storage shelves mounted above work counters.

(b) Door pulls or handles for wall cabinets shall be mounted as close to the bottom of cabinet doors as practicable. Door pulls or handles for base cabinets shall be mounted as close to the top of cabinet doors as possible.

13.3.5 Laundry Facilities. If laundry equipment is provided within individual accessible dwelling units, or if separate laundry facilities serve one or more accessible dwelling units, then they shall meet the following requirements:

(1) Location. Laundry facilities and laundry equipment shall be on an accessible route.

(2) Washing Machines and Clothes Dryers. A minimum of one washing machine and one clothes dryer in each common use laundry room shall be front loading.

(3) Controls. Laundry equipment controls on front loading machines shall comply with 4.27.

13.4 Requirements for Dwelling Units Accessible to Persons with Hearing Impairments.

13.4.1 General. Dwelling units required to be accessible by 13.2 must comply with 13.4.

(1)* Alarms. Alarms shall comply with 13.3.2(10).

EQUIVALENT FACILITATION. Where single station audible alarms are provided, equivalent facilitation shall include the installation of electrical outlets to accommodate single station visible alarms. Where building-wide audible alarm systems are provided, equivalent facilitation shall include the installation of all necessary connections to a facility's central alarm system to facilitate integration of visible alarm appliances. For the purpose of equivalent facilitation, such visible alarm appliances shall be provided by the operator of the facility during the tenancy of a person with a hearing impairment.

(2) Notification Devices. Permanently installed visible notification devices shall serve all kitchens, bathrooms, and living, sleeping and dining rooms. Notification devices shall provide visible signals to alert occupants of incoming telephone calls and door knocks or bells. Notification devices shall not be connected to visible alarm signal appliances. Visible notification devices in sleeping rooms shall have controls to deactivate the signal.

EQUIVALENT FACILITATION. Equivalent facilitation shall include telephone and other wiring to facilitate use of notification devices. For the purpose of equivalent facilitation, such notification devices shall be provided by the operator of the facility during the tenancy of a person with a hearing impairment.

(3) Telephones. Permanently installed telephones shall include a TTY and shall comply with 4.31.5(1) and 4.31.5(2). An accessible electrical outlet shall be provided within 48 in (1220 mm) of each telephone connection to facilitate the use of a TTY.

(4) Entry Doors. Entry doors to dwelling units shall have peepholes for use by standing individuals for security purposes.

14. PUBLIC RIGHTS-OF-WAY.

14.1* General. All areas, elements, and facilities intended for pedestrian access, circulation, and use that are constructed, installed, or altered in the public right-of-way and which are subject to title II of the ADA shall comply with 14 and with provisions of 4.1 through 4.35 that are not otherwise specified in this section.

14.1.1 Definitions.

Continuous Passage.* A continuous unobstructed pedestrian circulation path within a public sidewalk connecting pedestrian areas, elements, and facilities in the public right-of-way to accessible routes on adjacent sites. A continuous passage is provided in lieu of an accessible route in a public right-of-way.

Public Right-of-Way. The strip of land within the boundaries of which a public road and its appurtenances (e.g., shoulders, parkways, borders, and public sidewalks) are built or a public pedestrian easement providing access to a public facility through adjacent sites or properties.

Public Sidewalk.* An improved exterior pathway intended for pedestrian use along a vehicular way in the public right-of-way or in a public pedestrian easement.

Public Sidewalk Curb Ramp. A combined ramp and landing within a public sidewalk to accomplish a change of level at a curbed or otherwise separated street crossing. A perpendicular public sidewalk curb ramp runs perpendicular to and cuts through the curb; it connects to a street crossing at the bottom of its ramp run and to a landing at the top. A diagonal public sidewalk curb ramp is a variant of a perpendicular public sidewalk curb ramp that is located at the midpoint of a curb radius and serves two intersecting crossing directions at a corner. A parallel public sidewalk curb ramp has a ramped surface that is coincident with the public sidewalk and runs parallel to the curb in the direction of travel; it connects to the public sidewalk at the top and to a landing at the bottom of its run. The landing of a parallel public sidewalk curb ramp connects to the street crossing.

Site Infeasibility. Existing site development conditions that prohibit the incorporation of elements, spaces, or features which are in full and strict compliance with the minimum requirements for new construction in the public right-of-way and which are necessary for pedestrian access, circulation, and use.

14.2* New Construction: Minimum Requirements.

14.2.1* Public Sidewalks. Where provided, public sidewalks shall contain a continuous passage. The continuous passage shall connect to elements covered by section 14 and accessible routes provided on adjacent sites. Public sidewalks and the continuous passage within them shall comply with the following requirements:

(1) Width.

(a) The minimum clear width of a continuous passage shall be 36 in (915 mm). If a person in a wheelchair must make a turn around an obstruction, the minimum clear width of the continuous passage shall be as shown in Fig. 7(a) and (b).

(b) Public sidewalks less than 60 in (1525 mm) in continuous width shall provide passing space at reasonable intervals not to exceed 200 ft (61 m). Passing space shall provide a 60 in by 60 in (1525 mm by 1525 mm) minimum clear space and may be provided at driveways, at building entrances, and at public sidewalk intersections.

(2) Slope.

(a)* The minimum feasible public sidewalk running slope consistent with slopes established for adjacent roadways shall be provided.

(b)* Public sidewalk cross slope shall not exceed 1:50 (2 percent). Where public sidewalk intersections in the public right-of-way serve two directions of travel, the slope in any direction shall not exceed 1:50.

(3) Surfaces.

(a) Surfaces of public sidewalks shall be stable, firm, and slip-resistant and shall lie generally in a continuous plane with a minimum of surface warping.

14.2.2* Protruding Objects

(b) Changes in level up to 1/4 in (6 mm) may be vertical and without edge treatment (see Fig. 7(c)). Changes in level between 1/4 in and 1/2 in (6 mm and 13 mm) shall be beveled with a slope no greater than 1:2 (see Fig. 7(d)). Changes in level greater than 1/2 in (13 mm) shall be accomplished by means of a public sidewalk curb ramp that complies with 14.2.4, a ramp that complies with 4.8 (Ramps), or an elevator that complies with 4.10 (Elevators).

(c) Gratings in public sidewalks shall have spaces no greater than 1/2 in (13 mm) wide in the direction(s) of traffic flow and shall not be located in the continuous passage.

(d) Where public sidewalks cross rail systems at grade, the surface of the continuous passage shall be level and flush with the rail top at the outer edge and between the rails. The horizontal gap on the inner edge of each rail shall be the minimum necessary to allow passage of wheel flanges and shall not exceed 2-1/2 in (64 mm) maximum.

(4) Separation. Public sidewalks shall be raised to curb height or separated from vehicular ways by curbs, planted parkways, or other barriers, which shall be continuous except where interrupted by driveways, alleys, or connections to accessible elements.

EXCEPTION: Unseparated public sidewalks may be constructed along undeveloped frontages of rural roadways.

14.2.2* Protruding Objects.

(1) Wall-Mounted Objects. Objects projecting from walls (e.g., signs, fixtures, telephones, canopies) with their leading edges between 27 in and 80 in (685 mm and 2030 mm) above the finished public sidewalk shall protrude no more than 4 in (100 mm) into any portion of a public sidewalk (see Fig. 8(a)). Objects mounted with their leading edges located less than 27 in (685 mm) or more than 80 in (2030 mm) above the finished public sidewalk may project any amount provided that they do not reduce the required continuous passage along the public sidewalk (see Figs. 8(a) and (b)).

(2) Pole-Mounted Objects. Free-standing objects mounted on posts or pylons may overhang their mountings a maximum of 12 in (305 mm) when located between 27 in and 80 in (685 mm and 2030 mm) above the finished public sidewalk provided that they do not reduce the required continuous passage along the public sidewalk (see Fig. 8(d)).

(3) Head Room. Where the vertical clearance of an area on or adjoining a public sidewalk or continuous passage is less than 80 in (2030 mm) (e.g., at the underside of projecting stairs or other elements that exceed a 4 in (100 mm) profile when mounted from a wall), guardrails or other barriers shall be provided. Leading edges of such barriers shall be located less than 27 in (685 mm) above the finished public sidewalk, as shown in Fig. 8(c-1). Barriers shall not reduce the required continuous passage.

14.2.3* Fixed Street Furnishings. Where provided for pedestrian use or operation, fixed street furnishings installed on or adjacent to a public sidewalk and accessed from the public pedestrian right-of-way shall be connected to the continuous passage and shall comply with the applicable following provisions:

(1) Drinking Fountains. Where drinking fountains are provided at a location, they shall be accessible to individuals who use wheelchairs in accordance with 4.15 and to those who have difficulty bending or stooping. This can be accomplished by the use of a "hi-lo" fountain; by providing one fountain accessible to those who use wheelchairs and one fountain at a standard height convenient for those who have difficulty bending, or by such other means as would achieve the required accessibility for each group.

(2) Public Telephones.

(a) Where a single unit public telephone is provided, it shall comply with 4.31.2 through 4.31.8.

(b) Where a bank of telephones (two or more adjacent public telephones, often installed as a unit) is provided, at least one telephone per bank shall comply with 4.31.2 through 4.31.8.

(c) All public telephones shall be equipped with volume controls complying with 4.31.5(2) and shall be hearing aid compatible.

14.2.4* Public Sidewalk Curb Ramps

(3) Single User Toilet Facilities. Where a single user toilet facility is provided, it shall comply with 4.22.2 through 4.22.7.

(4) Fixed Seating, Tables, and Benches.

(a) Where fixed seating and tables are provided at a single location, at least five percent, but not less than one, shall comply with 4.32.

(b) Where fixed benches are provided at a single location, at least 50 percent shall have a back and armrests. A 30 in by 48 in (760 mm by 1220 mm) clear ground space for a wheelchair shall be provided at one end of at least one bench at each location where fixed benches are provided.

(5) Bus Shelters and Stops. Where a bus stop pad is provided, it shall comply with 10.2.1(1). Where a bus shelter is provided, it shall comply with 10.2.1(2).

(6) Street Identification and Other Pedestrian Signage. Where provided for pedestrian use, informational and directional signage and street identification signs shall comply with 4.30.2, 4.30.3, and 4.30.5. Where bus route identification signs are provided on or adjacent to a public sidewalk, they shall comply with 10.2.1(3).

(7) Other Elements. Where provided, other fixed street furnishings intended for pedestrian operation or use, such as information kiosks, fire alarm boxes, fixed trash receptacles and similar elements, shall comply with 4.27.

14.2.4* Public Sidewalk Curb Ramps.

(1) General.

(a) A public sidewalk curb ramp and level landing complying with 14.2.4 shall be provided wherever a public sidewalk crosses a curb or other change in level at each street crossing and where otherwise required in this section and shall be connected to a continuous passage in each direction of travel.

(b) The provisions of 4.7 and 4.8 do not apply to public sidewalk curb ramps.

(2) Types of Public Sidewalk Curb Ramps. Public sidewalk curb ramps shall be perpendicular to the curb at street crossings and each shall have a level landing at the top (see Figs. 58 and 59(a)). At marked crossings, the bottom of the ramp run, exclusive of flared sides, shall be wholly contained within the markings (see Figs. 60 (a) and (b)). Single (i.e., diagonal or depressed corner) public sidewalk curb ramps serving two street crossing directions and built-up (i.e., projected) public sidewalk curb ramps are not permitted in new construction.

EXCEPTION: Where public pedestrian right-of-way width established by local or State regulation, guideline, or practice will not accommodate a perpendicular public sidewalk curb ramp and landing complying with 14.2.4(2), a parallel public sidewalk curb ramp with a level landing at its bottom shall be provided instead of a perpendicular public sidewalk curb ramp (see Fig. 59(b)). At marked crossings, the landing at the bottom of the ramp run shall be wholly contained within the markings (see Fig. 60(c)). A combination of parallel and perpendicular public sidewalk curb ramps and landings may also be provided (see Figs. 59(c) and 60(d)).

(3) Width. Public sidewalk curb ramps shall be 36 in (915 mm) wide minimum, exclusive of flared sides.

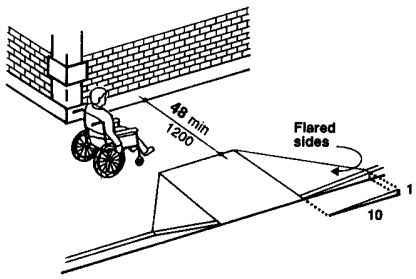

Level Landing at Top of Perpendicular Public Sidewalk Curb Ramp

Fig. 58

14.2.4* Public Sidewalk Curb Ramps

(4)* Landings.

(a) Where a perpendicular public sidewalk curb ramp is provided, a landing the width of the public sidewalk curb ramp shall be provided at the top of the ramp run (see Fig. 58). The slope of the landing shall not exceed 1:50 in any direction. The landing shall be 48 in (1220 mm) minimum in length and shall connect to the continuous passage in each direction of travel.

(b) Where a parallel public sidewalk curb ramp is provided, as permitted in 14.2.4(2) Exception, a landing the width of the parallel public sidewalk curb ramp and a minimum of 60 in (1525 mm) in length in the direction of the ramp run shall be provided at the bottom of the parallel public sidewalk curb ramp. The slope of the landing shall not exceed 1:50 in any direction. At marked crossings, the required landing at the bottom of the parallel public sidewalk curb ramp shall be wholly contained within the markings.

(c) Where parallel and perpendicular public sidewalk curb ramps are combined to serve a street crossing, as permitted in 14.2.4(2), the landing required for the perpendicular public sidewalk curb ramp may be coincident with that provided for the parallel public sidewalk curb ramp.

(5) Slope. The minimum feasible running slope shall be provided for any public sidewalk curb ramp and shall be measured from a level plane, as shown in Fig. 61. The maximum running slope of any public sidewalk curb ramp shall be 1:12. The maximum cross slope of any public sidewalk curb ramp shall be 1:50.

EXCEPTION: A parallel public sidewalk curb ramp allowed by 14.2.4(2) Exception shall have a maximum slope of 1:12 when measured from a level plane as shown in Fig. 61 but shall not be required to exceed 96 in (2440 mm) in length.

(6) Edges. Where a side of a perpendicular public sidewalk curb ramp is contiguous with a public sidewalk, it shall be flared, with a slope of 1:10 maximum. A perpendicular public sidewalk curb ramp may have a returned side or flare of any slope when not contiguous with a public sidewalk or where protected by a guardrail or other barrier.

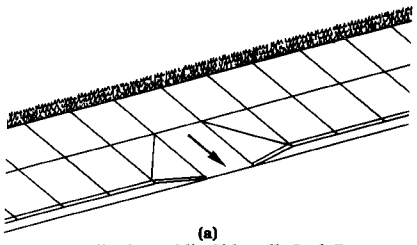

(a)
Perpendicular Public Sidewalk Curb Ramp

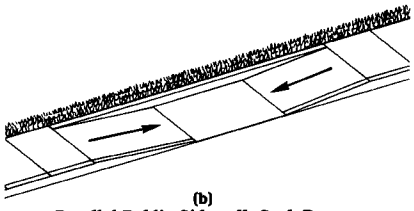

(b)
Parallel Public Sidewalk Curb Ramp

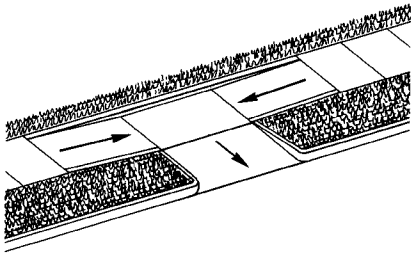

(c)
Combined (Parallel/Perpendicular) Public Sidewalk Curb Ramp

Fig. 59
Public Sidewalk Curb Ramps

Note: See new construction and alteration provisions for minimum dimensions for public sidewalk curb ramps shown in Figure 59.

(7) Surfaces.

(a) The surface of a public sidewalk curb ramp shall be stable, firm and slip-resistant. Gratings and similar access covers shall not be located on public sidewalk curb ramps or landings. The surface of a perpendicular public sidewalk curb ramp or the landing of a parallel public sidewalk curb ramp shall contrast visually with adjoining public sidewalk surfaces, either light-on-dark or dark-on-light.

(b) Detectable Warnings. (Reserved).

(8) Transitions. Transitions shall be flush and free of abrupt changes. Counter slopes of adjoining gutters and road surfaces connecting to the full width of a public sidewalk curb ramp shall be 1:20 maximum for a distance of 24 in (610 mm) as measured from the base of the public sidewalk curb ramp or landing edge at the street (see Fig. 61). Gratings or similar access covers shall not be located in the area at the base of the public sidewalk curb ramp or landing.

(9) Obstructions. Public sidewalk curb ramps shall be located or protected to prevent their obstruction by parked vehicles.

14.2.5 Pedestrian Street Crossings. Where provided, pedestrian street crossings at, above, or below street grade shall comply with the applicable following provisions and be connected to the continuous passage:

(1)* Crossing Controls.

(a) Controls. Controls shall be raised from or flush with their housings and shall be a minimum of 2 in (51 mm) in the smallest dimension. The force required to activate controls shall be no greater than 5 lbf (22.2 N).

(b) Location. Controls shall be located as close as practicable to the public sidewalk curb ramp serving the controlled crossing and shall permit operation from a clear ground space.

(c) Mounting Height. Pedestrian-actuated crossing controls shall be a maximum of 42 in (1065 mm) above the finished public sidewalk.

(d) Clear Ground Space. A stable, firm, and slip-resistant area a minimum of 30 in by 48 in (915 mm by 1220 mm) and complying with 4.2.4(1) and (2) shall be provided to allow for a forward or parallel approach to the controls. Where a parallel approach is provided, controls shall be within 10 in (254 mm) horizontally of and centered on the clear ground space. Where a forward approach is provided, controls shall abut and be centered on the clear ground space.

(2)* Marked Crossings. Marked crossings shall be delineated in materials or markings that provide a visual contrast with the surface of the street.

(3)* Islands. Raised islands in crossings shall be cut through level with the street or have public sidewalk curb ramps at both sides and a level area 48 in (1220 mm) long minimum and a minimum of 36 in (915 mm) wide in the part of the island intersected by the crossings (see Figs. 60(a) and (b)).

(4)* Pedestrian Overpasses and Underpasses. Where a public sidewalk is provided on a grade-separated overpass or underpass, changes in level shall be accomplished by a ramp or elevator complying with 4.8 or 4.10. Stairs serving an underpass or overpass shall comply with 4.9.

14.2.6 Vehicular Ways and Facilities. Where the following elements are provided on or adjacent to a public right-of-way for pedestrian use by motorists, the elements shall be served by a continuous passage and shall comply with the following provisions:

(1)* On-Street Parking.

(a) Where on-street public convenience parking is provided in commercial districts and at civic buildings, accessible on-street parking spaces shall be included in the total provided in the project or project area in accordance with the table in 4.1.2(5)(a). Accessible spaces shall not be smaller in width or length than that specified by the local jurisdictions for other spaces. The accessible spaces shall be provided at locations with minimum street and public sidewalk slope to the extent this is consistent with reasonable dispersion within the overall project area in which they are provided.

14.2.6 Vehicular Ways and Facilities

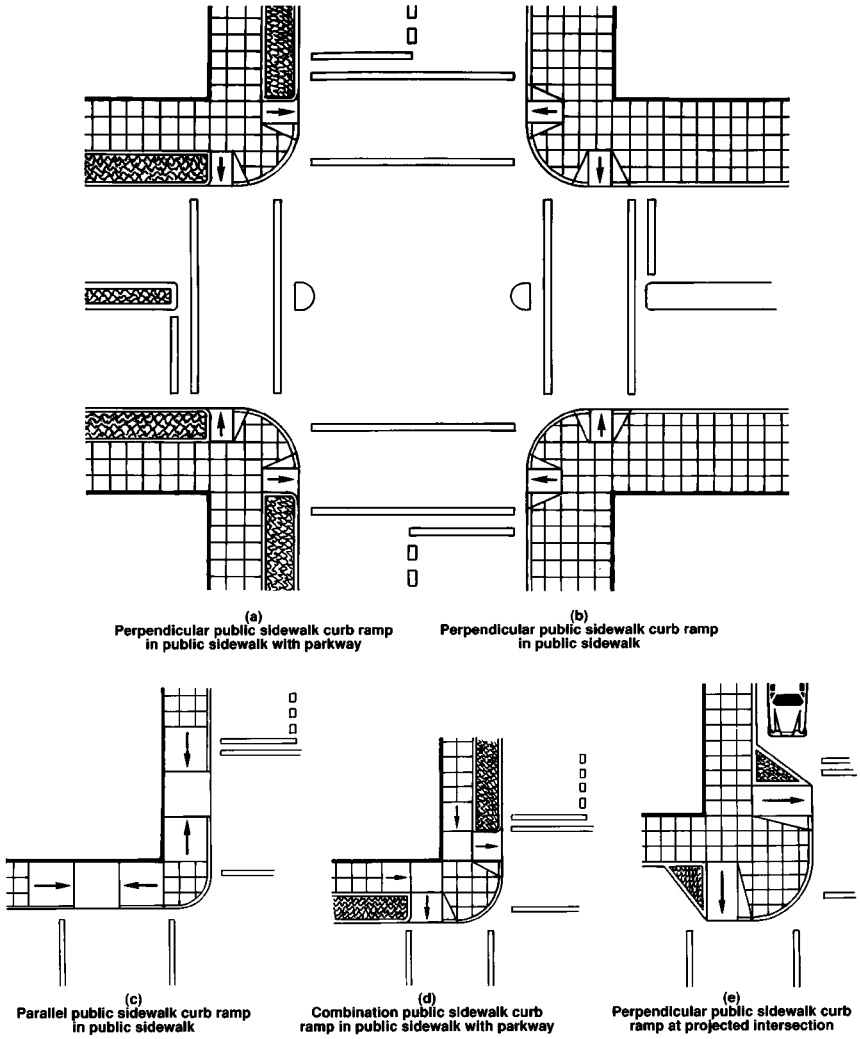

Fig. 60
Public Sidewalk Curb Ramps at Marked Crossings

14.2.6 Vehicular Ways and Facilities

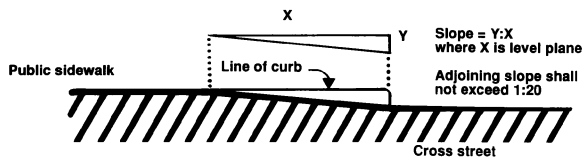

Fig. 61
Measurement of Public Sidewalk Curb Ramp Slope

(b) Accessible on-street parking spaces shall comply with the following provisions:

(i) Parallel Parking Spaces. A 60 in (1525 mm) wide minimum parallel access aisle shall be provided at street level the full length of the accessible parking space. The parallel access aisle shall connect at the head or foot of the parking space to a 60 in (1525 mm) wide minimum perpendicular access aisle which shall extend the full width of the parking space. A public sidewalk curb ramp complying with 14.2.4 shall connect the access aisles to the continuous passage. Two parallel parking spaces may share a perpendicular access aisle. The driving lane shall not encroach on any required access aisle. (See Fig. 62).

EXCEPTION: Where the width of the public pedestrian right-of-way between the curb and boundary of the public right-of-way is less than 12 ft (3660 mm), a parallel access aisle is not required in parallel parking spaces.

(ii) Perpendicular Parking Spaces. A 60 in (1525 mm) wide minimum parallel access aisle shall be provided at street level the full length of the accessible parking space. A public sidewalk curb ramp complying with 14.2.4 shall connect the access aisle to the continuous passage. Two perpendicular parking spaces may share an access aisle (see Fig. 9).

(iii) Angled Parking Spaces. A 60 in (1525 mm) wide minimum parallel access aisle shall be provided at street level the full length of the accessible parking space. A public sidewalk curb ramp complying with 14.2.4 shall connect the access aisle to the continuous passage.

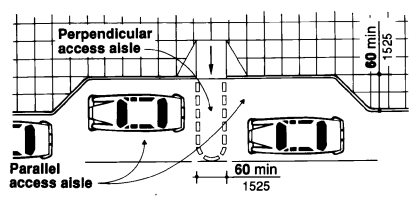

(a)
Double accessible parking space with perpendicular public sidewalk curb ramp

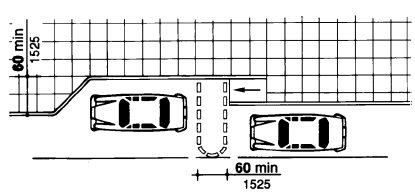

(b)
Single accessible parking space with parallel public sidewalk curb ramp

Fig. 62
Examples of Accessible Parallel On-Street Parking Spaces

14.3* Alterations

(iv) Van-Accessible Parking Spaces. Where perpendicular or angled parking is provided, one in every eight accessible parking spaces within the project area, but not less than one, shall be served by a parallel access aisle that is 96 in (2440 mm) wide minimum.

(v) Signage. Accessible parking spaces shall be designated as reserved by a sign that complies with 4.30.7. Spaces complying with 14.2.6(1)(b)(iv) shall contain an additional sign "Van Accessible" mounted below the symbol of accessibility. Signs shall be located so they cannot be obscured by a vehicle parked in the space.

(2) Parking Meters.

(a) Parking meter controls shall be 42 in (1065 mm) maximum above the finished public sidewalk. Controls and operating mechanisms shall be operable with one hand and shall not require tight grasping, pinching, or twisting of the wrist. The force required to activate controls shall be no greater than 5 lbf (22.2 N).

(b) Where parking meters serve accessible parking spaces, a stable, firm, and slip-resistant clear ground space a minimum of 30 in by 48 in (760 mm by 1220 mm), shall be provided at the controls and shall comply with 4.2.4.1 and 4.2.4.2. Where only a parallel approach is provided, controls shall be within 10 in (255 mm) horizontally of and centered on the clear ground space. Where only a forward approach is provided, controls shall abut and be centered on the clear ground space. Parking meters shall be located at or near the head or foot of the parking space so as not to interfere with the operation of a side lift or a passenger side transfer.

(3) Passenger Loading Zones.

(a) Each passenger loading zone shall provide a parallel access aisle at least 60 in (1525 mm) wide and 20 ft (6.1 m) long adjacent and parallel to the vehicle pull-up space (see Fig. 10). Signage complying with 4.30.7 shall be provided.

(b) Where a continuous curb separates the access aisle and vehicle space, a public sidewalk curb ramp complying with 14.2.5 shall be provided outside the area of the access aisle and connecting to it.

(c) Where a single passenger loading zone serves multiple vehicle pull-up spaces (e.g., at transportation facilities), additional public sidewalk curb ramps shall be provided at reasonable intervals and shall be located to minimize travel distance and maximize availability during heavy use.

(4)* Motorist Aid Communications Systems.

(a) Controls and operating mechanisms at callboxes shall be operable with one hand and shall not require tight grasping, pinching, or twisting of the wrist. The highest operable part shall be 48 in (1370 mm) maximum above the finished surface at the callbox location. The force required to activate controls shall be no greater than 5 lbf (22.2 N).

(b) The system shall provide both visible and audible indicators of call receipt and shall not require voice communication only.

(c) A stable, firm, and slip-resistant clear ground space a minimum of 30 in by 48 in (760 mm by 1220 mm), with a slope no greater than 1:50 in any direction, shall be provided at the controls and shall comply with 4.2.4.1 and 4.2.4.2. Where only a parallel approach is provided, controls shall be within 10 in (255 mm) horizontally of and centered on the clear ground space. Where only a forward approach is provided, controls shall abut and be centered on the clear ground space.

14.3* Alterations. If existing areas, elements, or facilities intended for pedestrian access, circulation, and use in an existing developed public right-of-way are altered they shall comply with 14.3.

14.3.1 General. Alterations to individual elements shall comply to the maximum extent feasible with the applicable requirements of 14.2, consistent with the following requirements:

(1) No alterations shall be undertaken that decrease or have the effect of decreasing the accessibility or usability of existing pedestrian areas, elements, or facilities.

(2) If alterations to existing public sidewalks, public sidewalk curb ramps, or pedestrian street crossings, when considered together, amount to a reconstruction of a block, inter-

section, or other substantial segment of the pedestrian circulation network in the public right-of-way, the entire segment shall, to the maximum extent feasible, comply with provisions for new construction.

(3) No alterations of an existing pedestrian area, element, or facility shall impose a requirement for greater accessibility than that which would be required for new construction.

(4) Alterations to a public sidewalk, public sidewalk curb ramp, or pedestrian street crossing in the public right-of-way shall be made so that adjacent segments of the continuous passage are readily accessible to and usable by individuals with disabilities, unless such alterations are disproportionate to the overall alterations in terms of cost and scope (as determined under criteria established by the Attorney General).

EXCEPTION: In alteration work, if site infeasibility precludes compliance with 14.2, the alteration work shall provide accessibility to the maximum extent feasible. Any elements or features of the public pedestrian right-of-way that are being altered and can be made accessible shall be made accessible within the scope of the alteration.

Site Infeasibility. Existing site development conditions that prohibit the incorporation of elements, spaces, and features which are in full and strict compliance with the minimum requirements for new construction in the public right-of-way and which are necessary for pedestrian access, circulation, and use.

14.3.2 Special Technical Provisions for Alterations to Existing Pedestrian Areas, Elements, and Facilities in the Public Right-of-Way.

(1)* Public Sidewalks. Where necessary to provide a continuous passage complying with 14.2.1, public sidewalk surfaces may be warped or blended. Where compliance with requirements for cross slope within the continuous passage cannot be fully met due to site infeasibility, the minimum cross slope feasible shall be provided. Existing gratings and similar appurtenances that comply with 14.2.1(2) and (3) may be located in the continuous passage if site infeasibility precludes their relocation during alterations.

(2)* Public Sidewalk Curb Ramps. Where site infeasibility precludes the installation of a public sidewalk curb ramp complying with all provisions of 14.2.2, the maximum accessibility feasible shall be provided, according to each of the following special technical provisions:

(a) Types of Public Sidewalk Curb Ramps. Public sidewalk curb ramp type shall be determined by existing public right-of-way width and the existence of other site constraints, in the following recommended priority: (i) perpendicular, (ii) parallel or combined, and (iii) diagonal. A projected (built-up) public sidewalk curb ramp is permitted in alterations to public rights-of-way where other designs cannot be accommodated.

(b) Width. Where public pedestrian right-of-way width is less than 36 in (915 mm), a parallel public sidewalk curb ramp and landing the width of the existing public pedestrian right-of-way shall be provided.

(c) Landings. Landings shall be provided and shall comply with the following special technical provisions:

(i) Where public pedestrian right-of-way width is insufficient to accommodate a perpendicular public sidewalk curb ramp with a top landing 48 in (1220 mm) in length, a top landing of the maximum feasible length and a minimum length of 36 in (915 mm) shall be provided. Side flares shall have a maximum slope of 1:12.

(ii) Where site infeasibility precludes a parallel public sidewalk curb ramp with a bottom landing 60 in (1525 mm) in length, a bottom landing of the maximum feasible length and a minimum length of 48 in (1220 mm) shall be provided.

(iii) Where site infeasibility precludes a landing slope of 1:50 in any direction, the slope perpendicular to the curb face shall not exceed 1:50.

(iv) Where site infeasibility precludes a landing slope of 1:50 when measured perpendicular to the curb face, the minimum feasible slope in each direction shall be provided.

14.4* Temporary Work

(d) Slope. (i) Where public right-of-way width is insufficient to accommodate a landing and perpendicular public sidewalk curb ramp with a maximum running slope of 1:12, the minimum feasible running slope between 1:12 and 1:10 is permitted for a rise of 6 in (150 mm) maximum. (ii) Where public right-of-way width is insufficient to accommodate a landing and perpendicular public sidewalk curb ramp with a maximum running slope of 1:10, the minimum feasible running slope between 1:8 and 1:10 shall be permitted for a rise of 3 in (75 mm) maximum. (iii) A public sidewalk curb ramp shall have the maximum slope permitted in (i) or (ii) when measured from a level plane as shown in Fig. 61 but shall not be required to exceed 72 in (1830 mm) in length. (iv) Where compliance with requirements for cross slope cannot be fully met due to site infeasibility, the minimum feasible cross slope shall be provided. (e) Surfaces. (i) Existing gratings and similar appurtenances that comply with 14.2.1(2) and (3) may be located in public sidewalk curb ramps or landings if site infeasibility precludes their relocation during alterations. (ii) Where counter slopes of existing adjoining gutters and road surfaces exceed 1:20, newly installed public sidewalk curb ramp surfaces may be slightly crowned and projected beyond the curb face provided the leading edge at the street surface can be smoothly blended and sides are flared, without abrupt drop-offs. (3) On-Street Parking. Parallel on-street parking spaces designated for use by persons with disabilities and located immediately adjacent to intersections may be served by public sidewalk curb ramps located at street crossings when site infeasibility precludes the installation of a public sidewalk curb ramp and access aisles complying with 14.2.6(1)(b)(i) at the space, provided that motorists exiting their vehicles do not have to cross into perpendicular travel lanes to gain access to a public sidewalk curb ramp.	**14.4* Temporary Work.** Construction and repair work within the public right-of-way that affects pedestrian circulation elements, spaces, or facilities shall comply with the following provisions: (1) Construction sites in the public right-of-way shall be protected with barriers to warn of hazards on the pedestrian circulation network. (2) Where a temporary alternate circulation path is provided it shall comply with 14.3 and shall be clearly marked.

APPENDIX

This Appendix contains *materials of an advisory nature* and provides additional information that should help the reader to understand the minimum requirements of *the guidelines* or to design buildings or facilities for greater accessibility. The paragraph numbers correspond to the sections or paragraphs of the *guideline* to which the material relates and are therefore not consecutive (for example, A4.2.1 contains additional information relevant to 4.2.1). Sections *of the guidelines* for which additional material appears in this Appendix have been indicated by an asterisk. *Nothing in this Appendix shall in any way obviate any obligation to comply with the requirements of the guidelines itself.*

A2.0 General.

A2.2 Equivalent Facilitation. *Specific examples of equivalent facilitation are found in the following sections:*

4.1.6(3)(c)	*Elevators in Alterations*
4.31.9	*TTYs*
7.2	*Sales and Service Counters, Teller Windows, Information Counters*
9.1.4	*Classes of Sleeping Accommodations*
9.2.2(6)(d)	*Requirements for Accessible Units, Sleeping Rooms, and Suites*

A3.0 Miscellaneous Instructions and Definitions.

A3.5 Definitions.

Transient Lodging. *The Department of Justice's policy and rules will further define what is covered as transient lodging.*

A4.0 Accessible Elements and Spaces: Scope and Technical Requirements.

A4.1.1 Application.

A4.1.1(3) *Areas Used Only by Employees as Work Areas. Where there are a series of individual work stations of the same type (e.g., laboratories, service counters, ticket booths), five percent, but not less than one, of each type of work station should be constructed so that an individual with disabilities can maneuver within the work stations. Rooms housing individual offices in a typical office building must meet the requirements of the guidelines concerning doors, accessible routes, etc. but do not need to allow for maneuvering space around individual desks. Modifications required to permit maneuvering within the work area may be accomplished as a reasonable accommodation to individual employees with disabilities under title I of the ADA. Consideration should also be given to placing shelves in employee work areas at a convenient height for accessibility or installing commercially available shelving that is adjustable so that reasonable accommodations can be made in the future.*

If work stations are made accessible they should comply with the applicable provisions of 4.2 through 4.35.

A4.1.2 Accessible Sites and Exterior Facilities: New Construction.

A4.1.2(5)(e) *Valet Parking. Valet parking is not always usable by individuals with disabilities. For instance, an individual may use a type of vehicle controls that render the regular controls inoperable or the driver's seat in a van may be removed. In these situations, another person cannot park the vehicle. It is recommended that some self-parking spaces be provided at valet parking facilities for individuals whose vehicles cannot be parked by another person and that such spaces be located on an accessible route to the entrance of the facility.*

A4.1.3 Accessible Buildings: New Construction.

A4.1.3(5) *Only passenger elevators are covered by the accessibility provisions of 4.10. Materials and equipment hoists, freight elevators not intended for passenger use, dumbwaiters, and construction elevators are not covered by these guidelines. If a building is exempt from the elevator requirement, it is not necessary to provide a platform lift or other means of vertical access in lieu of an elevator.*

Under Exception 4, platform lifts are allowed where existing conditions make it impractical to install a ramp or elevator. Such conditions generally occur where it is essential to provide access to small raised or lowered areas where space may not be available for a ramp. Ex-

A4.1.3 Accessible Buildings: New Construction

amples include, but are not limited to, raised pharmacy platforms, commercial offices raised above a sales floor, or radio and news booths.

A4.1.3(8)(a)(i) *This provision does not require an increase in the number of accessible entrances planned for facilities subject to title II of the ADA.*

Example 1: A new facility is planned with four principal public entrances. This section would require only two of the four principal public entrances to be accessible. It is preferable that all four entrances be accessible to provide greater convenience in accessing the facility.

Example 2: A new facility is planned with twelve entrances: ten entrances are public entrances, one is a service entrance, and one is a loading entrance. Of the ten public entrances, four are designed to be principal public entrances. This section would require that five of the ten public entrances be accessible. The five public entrances chosen to meet the 50 percent requirement of 4.1.3(8)(a)(i) would have to include the four principal public entrances planned for the facility.

A4.1.3(8)(b) *When a building or facility is designed and entrances are planned on more than one side of the facility, it is recommended that accessible entrances be included on each side of the facility where entrances are contemplated.*

When more than one type of entrance is planned for a facility, it is recommended that accessible entrances be distributed among the different types of entrances. Examples of different types of entrances are:

1) Entrances that are unrestricted. These entrances would be open to the general public during business hours.

2) Entrances that are restricted for a limited period of time. These entrances would be open to the general public during a portion of the day but restricted to a specific group of people for a limited period of time. For example, university facilities, such as libraries, might be restricted to students with proper identification after hours, and office buildings might be restricted to employees with card key access after regular business hours.

3) Entrances that are restricted at all times. These entrances would be used only by a controlled group of people. Such entrances might include skyboxes in sports facilities, university dormitories or other facilities which control entry for security purposes, stage door entrances used only by performers or stage personnel, sports facility entrances used only by team members, team staff, or officials, and employee only entrances.

A4.1.3(9) *Supervised automatic sprinkler systems have built in signals for monitoring features of the system such as the opening and closing of water control valves, the power supplies for needed pumps, water tank levels, and for indicating conditions that will impair the satisfactory operation of the sprinkler system. Because of these monitoring features, supervised automatic sprinkler systems have a high level of satisfactory performance and response to fire conditions.*

A4.1.3(10) *If an odd number of drinking fountains is provided on a floor, the requirement in 4.1.3(10)(b) may be met by rounding down the odd number to an even number and calculating 50 percent of the even number. When more than one drinking fountain on a floor is required to comply with 4.15, those fountains should be dispersed to allow wheelchair users convenient access. For example, in a large facility such as a convention center that has water fountains at several locations on a floor, the accessible water fountains should be located so that wheelchair users do not have to travel a greater distance than other people to use a drinking fountain.*

A4.1.3(17)(b) *In addition to the requirements of section 4.1.3(17)(b), the installation of additional volume controls is encouraged. Volume controls may be installed on any telephone.*

A4.1.3(19)(a) *Readily removable or folding seating units may be installed in lieu of providing an open space for wheelchair users. Folding seating units are usually two fixed seats that can be easily folded into a fixed center bar to allow for one or two open spaces for wheelchair users when necessary. These units are more easily adapted than removable seats which generally require the seat to be removed in advance by the facility management.*

Either a sign or a marker placed on seating with removable or folding arm rests is required by this section. Consideration should be given for ensuring identification of such seats in a darkened theater. For example, a marker which contrasts (light on dark or dark on light) and which also reflects light could be placed on the side of such seating so as to be visible in a lighted auditorium and also to reflect light from a flashlight.

A4.1.6 Accessible Buildings: Alterations.

A4.1.6(1)(h) *When an entrance is being altered, it is preferable that those entrances being altered be made accessible to the extent feasible.*

A4.2 Space Allowances and Reach Ranges.

A4.2.1 Wheelchair Passage Width.

(1) Space Requirements for Wheelchairs. Many persons who use wheelchairs need a 30 in (760 mm) clear opening width for doorways, gates, and the like, when the latter are entered head-on. If the *person* is unfamiliar with a building, if competing traffic is heavy, if sudden or frequent movements are needed, or if the wheelchair must be turned at an opening, then greater clear widths are needed. For most situations, the addition of an inch of leeway on either side is sufficient. Thus, a minimum clear width of 32 in (815 mm) will provide adequate clearance. However, when an opening or a restriction in a passageway is more than 24 in (610 mm) long, it is essentially a passageway and must be at least 36 in (915 mm) wide.

(2) Space Requirements for Use of Walking Aids. Although people who use walking aids can maneuver through clear width openings of 32 in (815 mm), they need 36 in (915 mm) wide passageways and walks for comfortable gaits. Crutch tips, often extending down at a wide angle, are a hazard in narrow passageways where they might not be seen by other pedestrians. Thus, the 36 in (915 mm) width provides a safety allowance both for the person *with a disability* and for others.

(3) Space Requirements for Passing. Able-bodied *persons* in winter clothing, walking

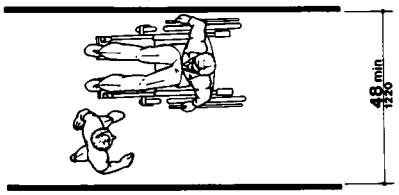

Fig. A1

Minimum Passage Width for One Wheelchair and One Ambulatory Person

A4.2 Space Allowances and Reach Ranges

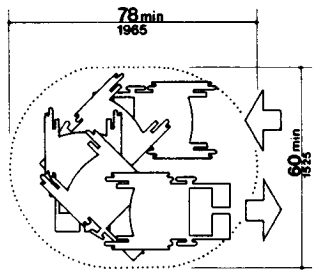

Fig. A2
Space Needed for Smooth U-Turn in a Wheelchair

straight ahead with arms swinging, need 32 in (815 mm) of width, which includes 2 in (50 mm) on either side for sway, and another 1 in (25 mm) tolerance on either side for clearing nearby objects or other pedestrians. Almost all wheelchair users and those who use walking aids can also manage within this 32 in (815 mm) width for short distances. Thus, two streams of traffic can pass in 64 in (1625 mm) in a comfortable flow. Sixty inches (1525 mm) provides a minimum width for a somewhat more restricted flow. If the clear width is less than 60 in (1525 mm), two wheelchair users will not be able to pass but will have to seek a wider place for passing. Forty-eight inches (1220 mm) is the minimum width needed for an ambulatory person to pass a nonambulatory or semi-ambulatory person. Within this 48 in (1220 mm) width, the ambulatory person will have to twist to pass a wheelchair user, a person with a *service animal*, or a

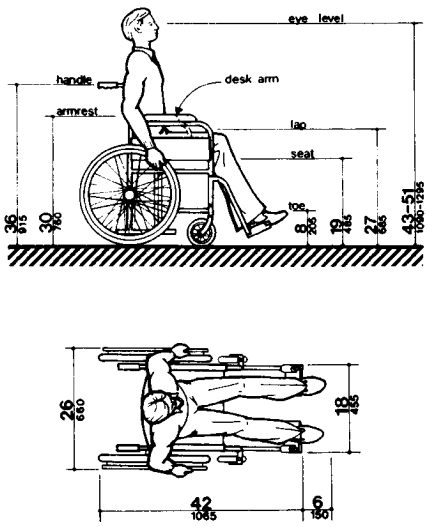

NOTE: Footrests may extend further for tall people

Fig. A3
Dimensions of Adult-Sized Wheelchairs

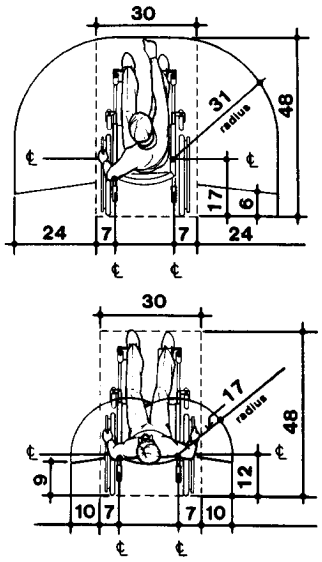

Fig. A3 (a)

A4.3 Accessible Route

semi-ambulatory person. There will be little leeway for swaying or missteps (see Fig. A1).

A4.2.3 Wheelchair Turning Space. *These guidelines specify* a minimum space of 60 in (1525 mm) diameter *or a 60 in by 60 in (1525 mm by 1525 mm) T-shaped space* for a pivoting 180-degree turn of a wheelchair. This space is usually satisfactory for turning around, but many people will not be able to turn without repeated tries and bumping into surrounding objects. The space shown in Fig. A2 will allow most wheelchair users to complete U-turns without difficulty.

A4.2.4 Clear Floor or Ground Space for Wheelchairs. The wheelchair and user shown in Fig. A3 represent typical dimensions for a large adult male. The space requirements in this *guideline* are based upon maneuvering clearances that will accommodate most wheelchairs. Fig. A3 provides a uniform reference for design not covered by this *guideline*.

A4.2.5 & A4.2.6 Reach. *Reach ranges for persons seated in wheelchairs may be further clarified by Fig. A3(a). These drawings approximate in the plan view the information shown in Fig. 4, 5, and 6.*

A4.3 Accessible Route.

A4.3.1 General.

(1) Travel Distances. Many people with mobility impairments can move at only very slow speeds; for many, traveling 200 ft (61 m) could take about 2 minutes. This assumes a rate of about 1.5 ft/s (455 mm/s) on level ground. It also assumes that the traveler would move continuously. However, on trips over 100 ft (30 m), disabled people are apt to rest frequently, which substantially increases their trip times. Resting periods of 2 minutes for every 100 ft (30 m) can be used to estimate travel times for people with severely limited stamina. In inclement weather, slow progress and resting can greatly increase a disabled person's exposure to the elements.

(2) Sites. Level, indirect routes or those with running slopes lower than 1:20 can sometimes provide more convenience than direct routes with maximum allowable slopes or with ramps.

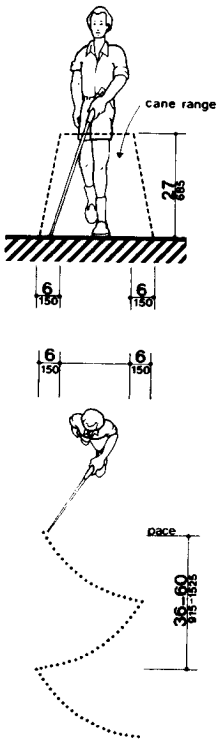

Fig. A4
Cane Technique

A4.3.10 Egress. Because people with disabilities may visit, be employed or be a resident in any building, emergency management plans with specific provisions to ensure their safe evacuation also play an essential role in fire safety and life safety.

A4.3.11.3 Stairway Width. *A 48 inch (1220 mm) wide exit stairway is needed to allow assisted evacuation (e.g., carrying a person in a wheelchair) without encroaching on the exit path for ambulatory persons.*

A4.3.11.4 Two-way Communication. *It is essential that emergency communication not be dependent on voice communications alone because the safety of people with hearing or speech impairments could be jeopardized. The visible signal requirement could be satisfied with something as simple as a button in the area of rescue assistance that lights, indicating that help is on the way, when the message is answered at the point of entry.*

A4.4 Protruding Objects.

A4.4.1 General. *Service animals* are trained to recognize and avoid hazards. However, most people with severe impairments of vision use the long cane as an aid to mobility. The two principal cane techniques are the touch technique, where the cane arcs from side to side and touches points outside both shoulders; and the diagonal technique, where the cane is held in a stationary position diagonally across the body with the cane tip touching or just above the ground at a point outside one shoulder and the handle or grip extending to a point outside the other shoulder. The touch technique is used primarily in uncontrolled areas, while the diagonal technique is used primarily in certain limited, controlled, and familiar environments. Cane users are often trained to use both techniques.

Potential hazardous objects are noticed only if they fall within the detection range of canes (see Fig. A4). Visually impaired people walking toward an object can detect an overhang if its lowest surface is not higher than 27 in (685 mm). When walking alongside *protruding* objects, they cannot detect overhangs. Since proper cane and *service animal* techniques keep people away from the edge of a path or from walls, a slight overhang of no more than 4 in (100 mm) is not hazardous.

A4.5 Ground and Floor Surfaces.

A4.5.1 General. *People who have difficulty walking or* maintaining balance *or who use crutches, canes, or walkers,* and those with restricted gaits are particularly sensitive to slipping and tripping hazards. For such people, a stable and regular surface is necessary for safe walking, particularly on stairs. Wheelchairs can be propelled most easily on surfaces that are hard, stable, and regular. Soft loose surfaces such as shag carpet, loose sand or gravel, wet clay, and irregular surfaces such as cobblestones can significantly impede wheelchair movement.

Slip resistance is based on the frictional force necessary to keep a shoe heel or crutch tip from slipping on a walking surface under conditions likely to be found on the surface. *While the dynamic coefficient of friction during walking varies in a complex and non-uniform way, the static coefficient of friction, which can be measured in several ways, provides a close approximation of the slip resistance of a surface. Contrary to popular belief, some slippage is necessary to walking, especially for persons with restricted gaits; a truly "non-slip" surface could not be negotiated.*

The Occupational Safety and Health Administration recommends that walking surfaces have a static coefficient of friction of 0.5. A research project sponsored by the Architectural and Transportation Barriers Compliance Board (Access Board) conducted tests with persons with disabilities and concluded that a higher coefficient of friction was needed by such persons. A static coefficient of friction of 0.6 is recommended for accessible routes and 0.8 for ramps.

It is recognized that the coefficient of friction varies considerably due to the presence of contaminants, water, floor finishes, and other factors not under the control of the designer or builder and not subject to design and construction guidelines and that compliance would be difficult to measure on the building site. Nevertheless, many common building materials suitable for flooring are now labeled with information on the static coefficient of friction. While it may not be possible to compare one product directly with another, or to guarantee a constant measure, builders and designers are encouraged to specify materials with appropriate values. As more products include information on slip resistance, improved uniformity in measurement and specification is likely. The Access Board's advisory guidelines on Slip Resistant Surfaces provides additional information on this subject.

Cross slopes on walks and ground or floor surfaces can cause considerable difficulty in propelling a wheelchair in a straight line.

A4.6 Parking and Passenger Loading Zones

A4.5.3 Carpet. Much more needs to be done in developing both quantitative and qualitative criteria for carpeting *(i.e., problems associated with texture and weave need to be studied).* However, certain functional characteristics are well established. When both carpet and padding are used, it is desirable to have minimum movement (preferably none) between the floor and the pad and the pad and the carpet which would allow the carpet to hump or warp. In heavily trafficked areas, a thick, soft (plush) pad or cushion, particularly in combination with long carpet pile, makes it difficult for individuals in wheelchairs and those with other ambulatory disabilities to get about. Firm carpeting can be achieved through proper selection and combination of pad and carpet, sometimes with the elimination of the pad or cushion, and with proper installation. *Carpeting designed with a weave that causes a zig-zag effect when wheeled across is strongly discouraged.*

A4.6 Parking and Passenger Loading Zones.

A4.6.3 Parking Spaces. *The increasing use of vans with side-mounted lifts or ramps by persons with disabilities has necessitated some revisions in specifications for parking spaces and adjacent access aisles. The typical accessible parking space is 96 in (2440 mm) wide with an adjacent 60 in (1525 mm) access aisle. However, this aisle does not permit lifts or ramps to be deployed and still leave room for a person using a wheelchair or other mobility aid to exit the lift platform or ramp. In tests conducted with actual lift/van/wheelchair combinations, (under a Board-sponsored Accessible Parking and Loading Zones Project) researchers found that a space and aisle totaling almost 204 in (5180 mm) wide was needed to deploy a lift and exit conveniently. The "van accessible" parking space required by these guidelines provides a 96 in (2440 mm) wide space with a 96 in (2440 mm) adjacent access aisle which is just wide enough to maneuver and exit from a side mounted lift. If a 96 in (2440 mm) access aisle is placed between two spaces, two "van accessible" spaces are created. Alternatively, if the wide access aisle is provided at the end of a row (an area often unused), it may be possible to provide the wide access aisle without additional space (see Fig. A5(a)).*

A sign is needed to alert van users to the presence of the wider aisle, but the space is not intended to be restricted only to vans.

"Universal" Parking Space Design. An alternative to the provision of a percentage of spaces with a wide aisle, and the associated need to include additional signage, is the use of what has been called the "universal" parking space design. Under this design, all accessible spaces are 132 in (3350 mm) wide with a 60 in (1525 mm) access aisle (see Fig. A5(b)). One

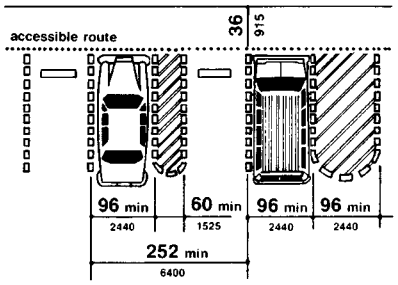

(a)
Van Accessible Space at End Row

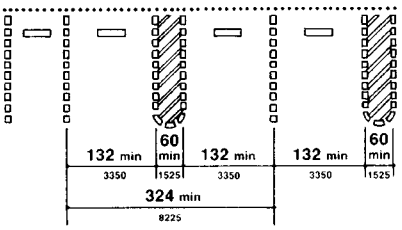

(b)
Universal Parking Space Design

Fig. A5
Parking Space Alternatives

advantage to this design is that no additional signage is needed because all spaces can accommodate a van with a side-mounted lift or ramp. Also, there is no competition between cars and vans for spaces since all spaces can accommodate either. Furthermore, the wider space permits vehicles to park to one side or the other within the 132 in (3350 mm) space to allow persons to exit and enter the vehicle on either the driver or passenger side, although, in some cases, this would require exiting or entering without a marked access aisle.

An essential consideration for any design is having the access aisle level with the parking space. Since a person with a disability, using a lift or ramp, must maneuver within the access aisle, the aisle cannot include a ramp or sloped area. The access aisle must be connected to an accessible route to the appropriate accessible entrance of a building or facility. The parking access aisle must either blend with the accessible route or have a curb ramp complying with 4.7. Such a curb ramp opening must be located within the access aisle boundaries, not within the parking space boundaries. Unfortunately, many facilities are designed with a ramp that is blocked when any vehicle parks in the accessible space. Also, the required dimensions of the access aisle cannot be restricted by planters, curbs or wheel stops.

A4.6.4 Signage. Signs designating parking places for disabled people can be seen from a driver's seat if the signs are mounted high enough above the ground and located at the front of a parking space.

A4.6.5 Vertical Clearance. High-top vans, which disabled people or transportation services often use, require higher clearances in parking garages than automobiles.

A4.8 Ramps.

A4.8.1 General. Ramps are essential for wheelchair users if elevators or lifts are not available to connect different levels. However, some people who use walking aids have difficulty with ramps and prefer stairs.

A4.8.2 Slope and Rise. *Ramp slopes between 1:16 and 1:20 are preferred.* The ability to manage an incline is related to both its slope and its length. Wheelchair users with disabilities affecting *their* arms or with low stamina have serious difficulty using inclines. Most ambulatory people and most people who use wheelchairs can manage a slope of 1:16. Many people cannot manage a slope of 1:12 for 30 ft (9 m).

A4.8.4 Landings. *Level landings are essential toward maintaining an aggregate slope that complies with these guidelines. A ramp landing that is not level causes individuals using wheelchairs to tip backward or bottom out when the ramp is approached.*

A4.8.5 Handrails. The requirements for stair and ramp handrails in this *guideline* are for adults. When children are principal users in a building or facility, a second set of handrails at an appropriate height can assist them and aid in preventing accidents.

A4.9 Stairs.

A4.9.1 Minimum Number. *Only interior and exterior stairs connecting levels that are not connected by an elevator, ramp, or other accessible means of vertical access have to comply with 4.9.*

A4.10 Elevators.

A4.10.6 Door Protective and Reopening Device. The required door reopening device would hold the door open for 20 seconds if the doorway remains obstructed. After 20 seconds, the door may begin to close. However, if designed in accordance with *ASME A17.1-1990*, the door closing movement could still be stopped if a person or object exerts sufficient force at any point on the door edge.

A4.10.7 Door and Signal Timing for Hall Calls. This paragraph allows variation in the location of call buttons, advance time for warning signals, and the door-holding period used to meet the time requirement.

A4.10.12 Car Controls. Industry-wide standardization of elevator control panel design would make all elevators significantly more convenient for use by people with severe visual impairments. In many cases, it will be possible to locate the highest control on elevator panels within 48 in (1220 mm) from the floor.

A4.11 Platform Lifts *(Wheelchair Lifts)*

A4.10.13 Car Position Indicators. A special button may be provided that would activate the audible signal within the given elevator only for the desired trip, rather than maintaining the audible signal in constant operation.

A4.10.14 Emergency Communications. A device that requires no handset is easier to use by people who have difficulty reaching. *Also, small handles on handset compartment doors are not usable by people who have difficulty grasping.*

Ideally, emergency two-way communication systems should provide both voice and visual display intercommunication so that persons with hearing impairments and persons with vision impairments can receive information regarding the status of a rescue. A voice intercommunication system cannot be the only means of communication because it is not accessible to people with speech and hearing impairments. While a voice intercommunication system is not required, at a minimum, the system should provide both an audio and visual indication that a rescue is on the way.

A4.11 Platform Lifts *(Wheelchair Lifts).*

A4.11.2 Other Requirements. *Inclined stairway chairlifts, and inclined and vertical platform lifts (wheelchair lifts) are available* for short-distance, vertical transportation of people with disabilities. Care should be taken in selecting lifts *as some lifts are not equally suitable for use by both wheelchair users and semi-ambulatory individuals.*

A4.12 Windows.

A4.12.1 General. *Windows intended to be operated by occupants in accessible spaces should comply with 4.12.*

A4.12.2 Window Hardware. *Windows requiring pushing, pulling, or lifting to open (for example, double-hung, sliding, or casement and awning units without cranks) should require no more than 5 lbf (22.2 N) to open or close. Locks, cranks, and other window hardware should comply with 4.27.*

A4.13 Doors.

A4.13.8 Thresholds at Doorways. Thresholds and surface height changes in doorways are particularly inconvenient for wheelchair users who also have low stamina or restrictions in arm movement because complex maneuvering is required to get over the level change while operating the door.

A4.13.9 Door Hardware. Some disabled persons must push against a door with their chair or walker to open it. Applied kickplates on doors with closers can reduce required maintenance by withstanding abuse from wheelchairs and canes. To be effective, they should cover the door width, less approximately 2 in (51 mm), up to a height of 16 in (405 mm) from its bottom edge and be centered across the *width of the door.*

A4.13.10 Door Closers. Closers with delayed action features give a person more time to maneuver through doorways. They are particularly useful on frequently used interior doors such as entrances to toilet rooms.

A4.13.11 Door Opening Force. Although most people with disabilities can exert at least 5 lbf (22.2N), both pushing and pulling from a stationary position, a few people with severe disabilities cannot exert 3 lbf (13.13N). Although some people cannot manage the allowable forces in this guideline and many others have difficulty, door closers must have certain minimum closing forces to close doors satisfactorily. Forces for pushing or pulling doors open are measured with a push-pull scale under the following conditions:

(1) Hinged doors: Force applied perpendicular to the door at the door opener or 30 in (760 mm) from the hinged side, whichever is farther from the hinge.

(2) Sliding or folding doors: Force applied parallel to the door at the door pull or latch.

(3) Application of force: Apply force gradually so that the applied force does not exceed the resistance of the door. In high-rise buildings, air-pressure differentials may require a modification of this specification in order to meet the functional intent.

A4.13.12 Automatic Doors and Power-Assisted Doors. Sliding automatic doors do not need guard rails and are more convenient for wheelchair users and visually impaired people to use. If slowly opening automatic doors can be reactivated before their closing cycle is completed, they will be more convenient in busy doorways.

A4.15 Drinking Fountains and Water Coolers.

A4.15.2 Spout Height. *Two drinking fountains, mounted side by side or on a single post, are usable by people with disabilities and people who find it difficult to bend over.*

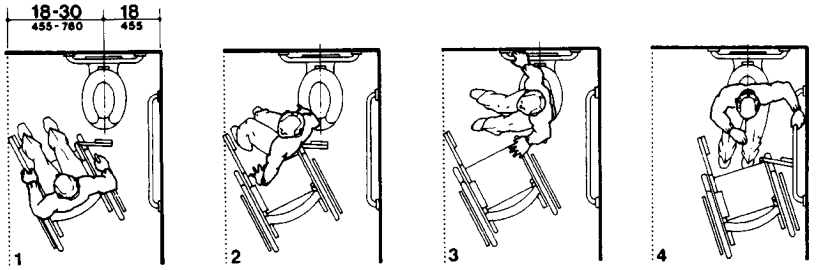

1 Takes transfer position, swings footrest out of the way, sets brakes.

2 Removes armrest, transfers.

3 Moves wheelchair out of the way, changes position (some people fold chair or pivot it 90° to the toilet).

4 Positions on toilet, releases brake.

(a)
Diagonal Approach

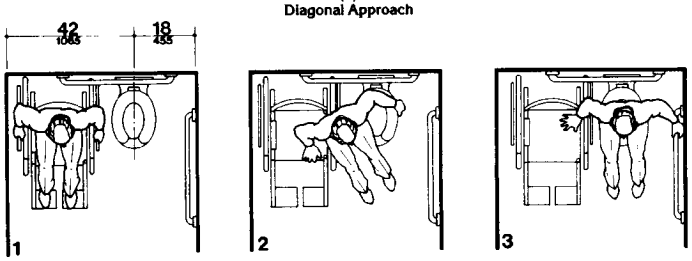

1 Takes transfer position, removes armrest, sets brakes.

2 Transfers.

3 Positions on toilet.

(b)
Side Approach

Fig. A6
Wheelchair Transfers

A4.16 Water Closets

A4.16 Water Closets.

A4.16.3 Height. Height preferences for toilet seats vary considerably among disabled people. Higher seat heights may be an advantage to some ambulatory disabled people, but are often a disadvantage for wheelchair users and others. Toilet seats 18 in (455 mm) high seem to be a reasonable compromise. Thick seats and filler rings are available to adapt standard fixtures to these requirements.

A4.16.4 Grab Bars. Fig. A6(a) and (b) show the diagonal and side approaches most commonly used to transfer from a wheelchair to a water closet. Some wheelchair users can transfer from the front of the toilet while others use a 90-degree approach. Most people who use the two additional approaches can also use either the diagonal approach or the side approach.

A4.16.5 Flush Controls. Flush valves and related plumbing can be located behind walls or to the side of the toilet, or a toilet seat lid can be provided if plumbing fittings are directly behind the toilet seat. Such designs reduce the chance of injury and imbalance caused by leaning back against the fittings. Flush controls for tank-type toilets have a standardized mounting location on the left side of the tank (facing the tank). Tanks can be obtained by special order with controls mounted on the right side. If administrative authorities require flush controls for flush valves to be located in a position that conflicts with the location of the rear grab bar, then that bar may be split or shifted toward the wide side of the toilet area.

A4.17 Toilet Stalls.

A4.17.3 Size and Arrangement. *This section requires use of the 60 in (1525 mm) standard stall (Figure 30(a)) and permits the 36 in (915 mm) or 48 in (1220 mm) wide alternate stall (Figure 30(b)) only in alterations where provision of the standard stall is technically infeasible or where local plumbing codes prohibit reduction in the number of fixtures. A standard stall provides a clear space on one side of the water closet to enable persons who use wheelchairs to perform a side or diagonal transfer from the wheelchair to the water closet. However, some persons with disabilities who use mobility aids such as walkers, canes or crutches are better able to use the two parallel grab bars in the 36 in (915 mm) wide alternate stall to achieve a standing position.*

In large toilet rooms, where six or more toilet stalls are provided, it is therefore required that a 36 in (915 mm) wide stall with parallel grab bars be provided in addition to the standard stall required in new construction. The 36 in (915 mm) width is necessary to achieve proper use of the grab bars; wider stalls would position the grab bars too far apart to be easily used and narrower stalls would position the grab bars too close to the water closet. Since the stall is primarily intended for use by persons using canes, crutches and walkers, rather than wheelchairs, the length of the stall could be conventional. The door, however, must swing outward to ensure a usable space for people who use crutches or walkers.

A4.17.5 Doors. To make it easier for wheelchair users to close toilet stall doors, doors can be provided with closers, spring hinges, or a pull bar mounted on the inside surface of the door near the hinge side.

A4.19 Lavatories and Mirrors.

A4.19.6 Mirrors. If mirrors are to be used by both ambulatory people and wheelchair users, then they must be at least 74 in (1880 mm) high at their topmost edge. A single full length mirror can accommodate all people, including children.

A4.21 Shower Stalls.

A4.21.1 General. Shower stalls that are 36 in by 36 in (915 mm by 915 mm) wide provide additional safety to people who have difficulty maintaining balance because all grab bars and walls are within easy reach. Seated people use the walls of 36 in by 36 in (915 mm by 915 mm) showers for back support. Shower stalls that are 60 in (1525 mm) wide and have no curb may increase usability of a bathroom by wheelchair users because the shower area provides additional maneuvering space.

A4.22 Toilet Rooms.

A4.22.3 Clear Floor Space. *In many small facilities, single-user restrooms may be the only*

A4.22 Toilet Rooms

facilities provided for all building users. In addition, the guidelines allow the use of "unisex" or "family" accessible toilet rooms in alterations when technical infeasibility can be demonstrated. Experience has shown that the provision of accessible "unisex" or single-user restrooms is a reasonable way to provide access for wheelchair users and any attendants, especially when attendants are of the opposite sex. Since these facilities have proven so useful, it is often considered advantageous to install a "unisex" toilet room in new facilities in addition to making the multi-stall restrooms accessible, especially in shopping malls, large auditoriums, and convention centers.

Figure 28 (section 4.16) provides minimum clear floor space dimensions for toilets in accessible "unisex" toilet rooms. The dotted lines designate the minimum clear floor space, depending on the direction of approach, required for wheelchair users to transfer onto the water closet. The dimensions of 48 in (1220 mm) and 60 in (1525 mm), respectively, correspond to the space required for the two common transfer approaches utilized by wheelchair users (see Fig. A6). It is important to keep in mind that the placement of the lavatory to the immediate side of the water closet will preclude the side approach transfer illustrated in Figure A6(b).

To accommodate the side transfer, the space adjacent to the water closet must remain clear of obstruction for 42 in (1065 mm) from the centerline of the toilet (Figure 28) and the lavatory must not be located within this clear space. A turning circle or T-turn, the clear floor space at the lavatory, and maneuvering space at the door must be considered when determining the possible wall locations. A privacy latch or other accessible means of ensuring privacy during use should be provided at the door.

RECOMMENDATIONS:

1. In new construction, accessible single-user restrooms may be desirable in some situations because they can accommodate a wide variety of building users. However, they cannot be used in lieu of making the multi-stall toilet rooms accessible as required.

2. Where strict compliance to the guidelines for accessible toilet facilities is technically infeasible in the alteration of existing facilities, accessible "unisex" toilets are a reasonable alternative.

3. In designing accessible single-user restrooms, the provisions of adequate space to allow a side transfer will provide accommodation to the largest number of wheelchair users.

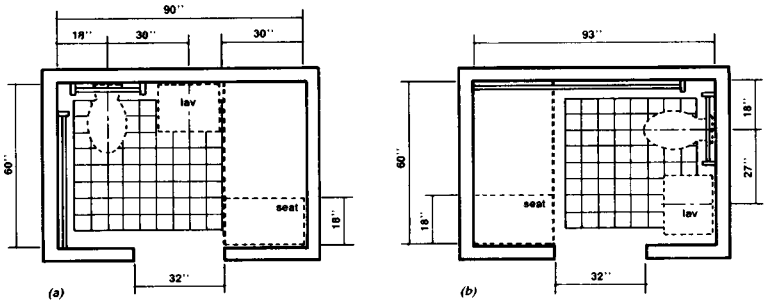

Fig. A7

A11

A4.23 Bathrooms, Bathing Facilities, and Shower Rooms.

A4.23.3 Clear Floor Space. *Figure A7 shows two possible configurations of a toilet room with a roll-in shower. The specific shower shown is designed to fit exactly within the dimensions of a standard bathtub. Since the shower does not have a lip, the floor space can be used for required maneuvering space. This would permit a toilet room to be smaller than would be permitted with a bathtub and still provide enough floor space to be considered accessible. This design can provide accessibility in facilities where space is at a premium (i.e., hotels and medical care facilities). The alternate roll-in shower (Fig. 57b) also provides sufficient room for the "T-turn" and does not require plumbing to be on more than one wall.*

A4.23.9 Medicine Cabinets. Other alternatives for storing medical and personal care items are very useful to disabled people. Shelves, drawers, and floor-mounted cabinets can be provided within the reach ranges of disabled people.

A4.26 Handrails, Grab Bars, and Tub and Shower Seats.

A4.26.1 General. Many disabled people rely heavily upon grab bars and handrails to maintain balance and prevent serious falls. Many people brace their forearms between supports and walls to give them more leverage and stability in maintaining balance or for lifting. The grab bar clearance of 1-1/2 in (38 mm) required in this guideline is a safety clearance to prevent injuries resulting from arms slipping through the openings. It also provides adequate gripping room.

A4.26.2 Size and Spacing of Grab Bars and Handrails. This specification allows for alternate shapes of handrails as long as they allow an opposing grip similar to that provided by a circular section of 1-1/4 in to 1-1/2 in (32 mm to 38 mm).

A4.27 Controls and Operating Mechanisms.

A4.27.3 Height. *Fig. A8 further illustrates*

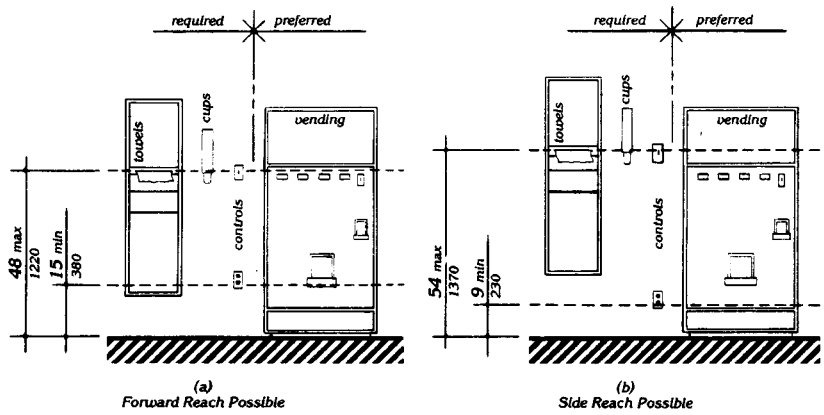

Fig. A8
Control Reach Limitations

mandatory and advisory control mounting height provisions for typical equipment.

Electrical receptacles installed to serve individual appliances and not intended for regular or frequent use by building occupants are not required to be mounted within the specified reach ranges. Examples would be receptacles installed specifically for wall-mounted clocks, refrigerators, and microwave ovens.

A4.28 Alarms.

A4.28.2 Audible Alarms. Audible emergency signals must have an intensity and frequency that can attract the attention of individuals who have partial hearing loss. People over 60 years of age generally have difficulty perceiving frequencies higher than 10,000 Hz. *An alarm signal which has a periodic element to its signal, such as single stroke bells (clang-pause-clang-pause), hi-low (up-down-up-down) and fast whoop (on-off-on-off) are best. Avoid continuous or reverberating tones. Select a signal which has a sound characterized by three or four clear tones without a great deal of "noise" in between.*

A4.28.3 Visual Alarms. The specifications in this section do not preclude the use of zoned or coded alarm systems.

A4.28.4 Auxiliary Alarms. Locating visual emergency alarms in rooms where persons who are deaf may work or reside alone can ensure that they will always be warned when an emergency alarm is activated. To be effective, such devices must be located and oriented so that they will spread signals and reflections throughout a space or raise the overall light level sharply. *However, visual alarms alone are not necessarily the best means to alert sleepers. A study conducted by Underwriters Laboratory (UL) concluded that a flashing light more than seven times brighter was required (110 candela v. 15 candela, at the same distance) to awaken sleepers as was needed to alert awake subjects in a normal daytime illuminated room.*

For hotel and other rooms where people are likely to be asleep, a signal-activated vibrator placed between mattress and box spring or under a pillow was found by UL to be much more effective in alerting sleepers. Many readily available devices are sound-activated so that they could respond to an alarm clock, clock radio, wake-up telephone call or room smoke detector. Activation by a building alarm system can either be accomplished by a separate circuit activating an auditory alarm which would, in turn, trigger the vibrator or by a signal transmitted through the ordinary 110-volt outlet. Transmission of signals through the power line is relatively simple and is the basis of common, inexpensive remote light control systems sold in many department and electronic stores for home use. So-called "wireless" intercoms operate on the same principal.

A4.29 *Detectable* Warnings.

A4.29.2 *Detectable* Warnings on Walking Surfaces. *The material used to provide contrast should contrast by at least 70%. Contrast in percent is determined by:*

$$Contrast = [(B_1 - B_2)/B_1] \times 100$$

where B_1 = light reflectance value (LRV) of the lighter area
and B_2 = light reflectance value (LRV) of the darker area.

Note that in any application both white and black are never absolute; thus, B_1 never equals 100 and B_2 is always greater than 0.

A4.30 Signage.

A4.30.1 General. In building complexes where finding locations independently on a routine basis may be a necessity (for example, college campuses), tactile maps or prerecorded instructions can be very helpful to visually impaired people. Several maps and auditory instructions have been developed and tested for specific applications. The type of map or instructions used must be based on the information to be communicated, which depends highly on the type of buildings or users.

Landmarks that can easily be distinguished by visually impaired individuals are useful as orientation cues. Such cues include changes in illumination level, bright colors, unique patterns, wall murals, location of special equipment or other architectural features.

Many people with disabilities have limitations in movement of their heads and reduced peripheral vision. Thus, signage positioned

A4.30 Signage

perpendicular to the path of travel is easiest for them to notice. People can generally distinguish signage within an angle of 30 degrees to either side of the centerlines of their faces without moving their heads.

A4.30.2 Character Proportion. The legibility of printed characters is a function of the viewing distance, character height, the ratio of the stroke width to the height of the character, the contrast of color between character and background, and print font. The size of characters must be based upon the intended viewing distance. A severely nearsighted person may have to be much closer to recognize a character of a given size than a person with normal visual acuity.

A4.30.4 Raised *and Brailled* Characters *and Pictorial Symbol Signs (Pictograms).* *The standard dimensions for literary Braille are as follows:*

Dot diameter	*.059 in.*
Inter-dot spacing	*.090 in.*
Horizontal separation between cells	*.241 in.*
Vertical separation between cells	*.395 in.*

Raised borders around *signs containing* raised characters may make them confusing to read unless the border is set far away from the characters. *Accessible signage with descriptive materials about public buildings, monuments, and objects of cultural interest may not provide sufficiently detailed and meaningful information. Interpretive guides, audio tape devices, or other methods may be more effective in presenting such information.*

A4.30.5 Finish and Contrast. *An eggshell finish (11 to 19 degree gloss on 60 degree glossimeter) is recommended. Research indicates that signs are more legible for persons with low vision when characters contrast with their background by at least 70 percent. Contrast in percent shall be determined by:*

$$Contrast = [(B_1 - B_2)/B_1] \times 100$$

where B_1 = light reflectance value (LRV) of the lighter area
and B_2 = light reflectance value (LRV) of the darker area.

Note that in any application both white and black are never absolute; thus, B_1 never equals 100 and B_2 is always greater than 0.

The greatest readability is usually achieved through the use of light-colored characters or symbols on a dark background.

A4.30.7 Symbols of Accessibility for Different Types of Listening Systems. *Paragraph 4 of this section requires signage indicating the availability of an assistive listening system. An appropriate message should be displayed with the international symbol of access for hearing loss since this symbol conveys general accessibility for people with hearing loss. Some suggestions are:*

INFRARED
ASSISTIVE LISTENING SYSTEM
AVAILABLE
——PLEASE ASK——

AUDIO LOOP IN USE
TURN T-SWITCH FOR
BETTER HEARING
——OR ASK FOR HELP——

FM
ASSISTIVE LISTENING
SYSTEM AVAILABLE
——PLEASE ASK——

The symbol may be used to notify persons of the availability of other auxiliary aids and services such as: real time captioning, captioned note taking, sign language interpreters, and oral interpreters.

A4.30.8 Illumination Levels. *Illumination levels on the sign surface shall be in the 100 to 300 lux range (10 to 30 footcandles) and shall be uniform over the sign surface. Signs shall be located such that the illumination level on the surface of the sign is not significantly exceeded by the ambient light or visible bright lighting source behind or in front of the sign.*

A4.31 Telephones.

A4.31.3 Mounting Height. In localities where the dial-tone first system is in operation, calls can be placed at a coin telephone through the operator without inserting coins. The operator button is located at a height of 46 in (1170 mm) if the coin slot of the telephone is at 54 in (1370 mm). A generally available public telephone with a coin slot mounted lower on the equipment would allow universal installation of telephones at a height of 48 in (1220 mm) or less to all operable parts.

A4.31.9 Text Telephones. *A public text telephone may be an integrated text telephone pay phone unit or a conventional portable text telephone that is permanently affixed within, or adjacent to, the telephone enclosure. In order to be usable with a pay phone, a text telephone which is not a single integrated text telephone pay phone unit will require a shelf large enough (10 in (255mm) wide by 10 in (255 mm) deep with a 6 in (150 mm) vertical clearance minimum) to accommodate the device, an electrical outlet, and a power cord. Movable or portable text telephones may be used to provide equivalent facilitation. A text telephone should be readily available so that a person using it may access the text telephone easily and conveniently. As currently designed pocket-type text telephones for personal use do not accommodate a wide range of users. Such devices would not be considered substantially equivalent to conventional text telephones. However, in the future as technology develops this could change.*

A4.32 *Fixed or Built-in* Seating and Tables.

A4.32.4 Height of *Tables or Counters.* Different types of work require different *table or counter* heights for comfort and optimal performance. Light detailed work such as writing requires a *table or counter* close to elbow height for a standing person. Heavy manual work such as rolling dough requires *a counter or table* height about 10 in (255 mm) below elbow height for a standing person. This principle of *high/low table or counter heights* also applies for seated persons; however, the limiting condition for seated manual work is clearance under the *table or counter.*

Table A1 shows convenient *counter heights* for seated persons. The great variety of heights for comfort and optimal performance indicates a need for alternatives or a compromise in height if people who stand and people who sit will be using the same counter area.

Table A1
Convenient Heights of Tables and Counters for Seated People[1]

Conditions of Use	Short Women in mm		Tall Men in mm	
Seated in a wheelchair:				
Manual work–				
Desk or removeable armrests	26	660	30	760
Fixed, full-size armrests[2]	32[3]	815	32[3]	815
Light detailed work:				
Desk or removable armrests	29	735	34	865
Fixed, full-size armrests[2]	32[3]	815	34	865
Seated in a 16-in. (405-mm) High chair:				
Manual work	26	660	27	685
Light detailed work	28	710	31	785

[1] All dimensions are based on a work-surface thickness of 1 1/2 in (38 mm) and a clearance of 1 1/2 in (38 mm) between legs and the underside of a work surface.

[2] This type of wheelchair arm does not interfere with the positioning of a wheelchair under a work surface.

[3] This dimension is limited by the height of the armrests: a lower height would be preferable. Some people in this group prefer lower work surfaces, which require positioning the wheelchair back from the edge of the counter.

A4.33 Assembly Areas.

A4.33.2 Size of Wheelchair Locations. Spaces large enough for two wheelchairs allow people who are coming to a performance together to sit together.

A4.33.3 Placement of Wheelchair Locations. The location of wheelchair areas can be planned so that a variety of positions

A4.33.6 Placement of Listening Systems

within the seating area are provided. This will allow choice in viewing and price categories.

Building/life safety codes set minimum distances between rows of fixed seats with consideration of the number of seats in a row, the exit aisle width and arrangement, and the location of exit doors. "Continental" seating, with a greater number of seats per row and a commensurate increase in row spacing and exit doors, facilitates emergency egress for all people and increases ease of access to mid-row seats especially for people who walk with difficulty. Consideration of this positive attribute of "continental" seating should be included along with all other factors in the design of fixed seating areas.

A4.33.6 Placement of Listening Systems. A distance of 50 ft (15 m) allows a person to distinguish performers' facial expressions.

A4.33.7 Types of Listening Systems. *An assistive listening system appropriate for an assembly area for a group of persons or where the specific individuals are not known in advance, such as a playhouse, lecture hall or movie theater, may be different from the system appropriate for a particular individual provided as an auxiliary aid or as part of a reasonable accommodation. The appropriate device for an individual is the type that individual can use, whereas the appropriate system for an assembly area will necessarily be geared toward the "average" or aggregate needs of various individuals.* A listening system that can be used from any seat in a seating area is the most flexible way to meet this specification. Earphone jacks with variable volume controls can benefit only people who have slight hearing loss and do not help people who use hearing aids. At the present time, *magnetic induction* loops are the most feasible type of listening system for people who use hearing aids *equipped with "T-coils,"* but people without hearing aids or those with hearing aids not equipped with inductive pick-ups cannot use them *without special receivers.* Radio frequency systems can be extremely effective and inexpensive. People without hearing aids can use them, but people with hearing aids need a special receiver to use them as they are presently designed. If hearing aids had a jack to allow a by-pass of microphones, then radio frequency systems would be suitable for people with and without hearing aids. Some listening systems may be subject to interference from other equipment and feedback from hearing aids of people who are using the systems. Such interference can be controlled by careful engineering design that anticipates feedback sources in the surrounding area.

Table A2 shows some of the advantages and disadvantages of different types of assistive listening systems. In addition, the Access Board has published a pamphlet on Assistive Listening Systems which lists demonstration centers across the country where technical assistance can be obtained in selecting and installing appropriate systems. The State of New York has also adopted a detailed technical specification which may be useful.

A5.0 Restaurants and Cafeterias.

A5.1 General. *Dining counters (where there is no service) are typically found in small carry-out restaurants, bakeries, or coffee shops and may only be a narrow eating surface attached to a wall. This section requires that where such a dining counter is provided, a portion of the counter shall be at the required accessible height.*

A7.0 Business, Mercantile and Civic.

A7.2(3)(iii) *Counter or Teller Windows with Partitions. Methods of facilitating voice communication may include grilles, talk-through baffles, and other devices mounted directly into the partition which users can speak directly into for effective communication. These methods are required to be designed or placed so that they are accessible to a person who is standing or seated. However, if the counter is only used by persons in a seated position, then a method of facilitating communication which is accessible to standing persons would not be necessary.*

A7.2(4) *Assistive Listening Devices. At all sales and service counters, teller windows, box offices, and information kiosks where a physical barrier separates service personnel and customers, it is recommended that at least one permanently installed assistive listening device complying with 4.33 be provided at each location or series. Where assistive listening devices are installed, signage should be provided identifying those stations which are so equipped.*

Table A2. Summary of Assistive Listening Devices and Systems

Table A2.
Summary of Assistive Listening Devices and Systems

COMPARISON OF LARGE AREA ASSISTIVE LISTENING SYSTEMS			
System Description	**Advantages**	**Disadvantages**	**Typical Applications**
FM BROADCAST (40 frequencies available on narrow band transmission systems. Ten frequencies available on wideband transmission systems.) ***Transmitters:*** FM base station or personal transmitter broadcasts signal to listening area. ***Receiver:*** Pocket size with: a) earphone(s), or b) headset, or c) induction neck-loop or silhouette coil coupling to personal hearing aid equipped with telecoil, or d) direct audio input (DAI) to personal hearing aid.	• Highly portable when used with body-worn, personal transmitter. • Easy to install. • May be used separately or integrated with existing PA-systems. • Multiple frequencies allow for use by different groups within same area (e.g., multi-language translation).	• Signal spill-over to adjacent rooms/ listening areas (can prevent interference by using different transmission frequencies for each room/listening area). Choose infrared if privacy is essential. • Receivers required for everyone. Requires administration and maintenance of receivers. • Susceptible to electrical interference when used with induction neck-loop/silhouette (Provision of DAI audio shoes and cords is impractical for public applications). • Some systems more susceptible to radio wave interference and signal drift than others.	Service counters Outdoor guided tours Tour busses Meeting rooms Conference rooms Auditoriums Classrooms Courtrooms Churches and Temples Theaters Museums Theme parks Arenas Sport stadiums Retirement/nursing homes Hospitals
INFRARED LIGHT ***Transmitter:*** Amplifier drives emitter panel(s) covering listening area. ***Receivers:*** Under-chin or Pendant type receiver with: a) headset, or b) earphone(s), or c) induction neck-loop or silhouette coil coupling to personal hearing aid equipped with telecoil, or d) direct audio input (DAI) to personal hearing aid.	• Unlike induction or FM transmission, IR transmission does not travel through walls or other solid surfaces. • Insures confidentiality. • Infrared receivers compatible with most infrared emitters. • May be used separately or integrated with existing PA-systems. • Can be used for multi-language translation (must use special multi-frequency receivers).	• Receivers required for everyone. Requires administration and maintenance of receivers. • Ineffective in direct sunlight. • Careful installation required to insure entire listening area will receive IR signal. • Susceptible to electrical interference when used with induction neckloop/silhouette (Provision of DAI audio shoes and cords is impractical for public applications). • Lifetime of emitters varies with company. • Historical buildings may pose installation problems.	Indoor service counters Meetings requiring confidentiality Meeting rooms Conference rooms Auditoriums Classrooms Courtrooms Churches and Temples Theaters Museums Arenas (indoors only) Sport stadiums (indoors only) Retirement/nursing homes Hospitals

Modified from a chart published by Centrum Sound, Cupertino, California
Cynthia L. Compton, Assistive Devices Center
Department of Audiology and Speech-Language Pathology
Gallaudet University, Washington, DC
Continued on next page

Table A2. Summary of Assistive Listening Devices and Systems

COMPARISON OF LARGE AREA ASSISTIVE LISTENING SYSTEMS			
System Description	**Advantages**	**Disadvantages**	**Typical Applications**
CONVENTIONAL INDUCTION LOOP ***Transmitter:*** Amplifier drives an induction loop that surrounds listening area. ***Receivers:*** a) Personal hearing aid with telecoil. b) Pocket size induction receiver with earphone or headset. c) Self-contained wand. d) Telecoil inside plastic chassis which looks like a BTE, ITE, or canal hearing aid.	• Requires little, or no administration of receivers, if most people have telecoil-equipped hearing aids. Induction receivers must be used where hearing aids in use are not equipped with telecoils. • Induction receivers are compatible with all loop systems. • Unobtrusive with telecoil hearing aid. • May be used separately or integrated with existing PA-systems. • Portable systems are available for use with small groups of listeners. These portable systems can be stored in a carrying case and set up temporarily, as needed.	• Signal spill-over to adjacent rooms. • Susceptible to electrical interference. • Limited portability unless areas are pre-looped or small, portable system is used (see advantages). • Requires installation of loop wire. Installation may be difficult in pre-existing buildings. Skilled installation essential in historical buildings (and may not be permitted at all). • If listener does not have telecoil-equipped hearing aid then requires administration and maintenance of receivers.	Service counters Ports of transportation Public transportation vehicles Tour busses Meeting rooms Conference rooms Auditoriums Classrooms Courtrooms Churches and Temples Theaters Museums Theme parks Arenas Sport stadiums Retirement/nursing homes Hospitals
3-D LOOP SYSTEM ***Transmitter:*** Amplifier drives a 3-D mat that is placed under the carpet of the listening area. ***Receivers:*** a) Personal hearing aid with telecoil. b) Pocket size induction receiver with earphone or headset. c) Self-contained wand. d) Telecoil inside plastic chassis which looks like a BTE, ITE, or canal hearing aid.	• Requires little, or no administration of receivers, provided most listeners have telecoil-equipped hearing aids. • Induction receivers are compatible with all loop systems. • May be used separately or integrated with existing PA-systems. • Three-dimensional reception of loop signal regardless of telecoil position. • Reduced signal spillover allows adjacent rooms to be looped without signal interference. • 3-D loop mats must be separated by 6 feet to avoid signal spillover.	• Limited portability (areas may be pre-3-D Loop matted to facilitate portability). • Requires installation of 3-D Loop mats. Installation may be difficult in pre-existing buildings. Skilled installation essential in historical buildings (and may not be permitted at all). • If listener does not have telecoil-equipped hearing aid then requires administration and maintenance of receivers. • Susceptible to electrical interference.	Service counters Ports of Transportation Meeting rooms Conference rooms Auditoriums Class rooms Court rooms Museums Theme Parks Retirement/nursing homes Meetings requiring confidentiality Hospitals

Modified from a chart published by Centrum Sound, Cupertino, California
Cynthia L. Compton, Assistive Devices Center
Department of Audiology and Speech-Language Pathology
Gallaudet University, Washington, DC

A18

A7.3 Check-out Aisles. *Section 7.2 refers to counters without aisles; section 7.3 concerns check-out aisles. A counter without an aisle (7.2) can be approached from more than one direction such as in a convenience store. In order to use a check-out aisle (7.3), customers must enter a defined area (an aisle) at a particular point, pay for goods, and exit at a particular point.*

A10.0 Transportation Facilities.

A10.3 Fixed Facilities and Stations.

A10.3.1(7) *Route Signs. One means of making control buttons on fare vending machines usable by persons with vision impairments is to raise them above the surrounding surface. Those activated by a mechanical motion are likely to be more detectable. If farecard vending, collection, and adjustment devices are designed to accommodate farecards having one tactually distinctive corner, then a person who has a vision impairment will insert the card with greater ease. Token collection devices that are designed to accommodate tokens which are perforated can allow a person to distinguish more readily between tokens and common coins. Thoughtful placement of accessible gates and fare vending machines in relation to inaccessible devices will make their use and detection easier for all persons with disabilities.*

A10.4.1(8) *Security Systems. This provision requires that, at a minimum, an accessible route or path of travel be provided but does not require security equipment or screening devices to be accessible. However, where barriers consist of movable equipment, it is recommended that they comply with the provisions of this section to provide persons with disabilities the ability to travel with the same ease and convenience as other members of the general public.*

A11.0 Judicial, Legislative and Regulatory Facilities.

A11.1 *All public and common use areas are required to be accessible. In judicial, legislative and regulatory facilities, these include, but are not limited to, press rooms, conference rooms, and attorney lounges.*

A11.2.1(2) *Jury Boxes and Witness Stands. Figure 46 illustrates space requirements for two wheelchair seating spaces.*

A11.2.1(4) *Fixed Judges' Benches, Clerks' Stations. Where courtrooms are assigned on a temporary basis, equipment should be available so that accessibility can be provided to at least one judge's bench and clerk's station within a few hours to accommodate court proceedings.*

A11.2.1(5) *Fixed Bailiffs' Stations, Court Reporters' Stations, Litigants' and Counsel Stations. Providing appropriate maneuvering clearances such as knee clearance under tables should be considered when selecting furniture for accessible areas that will be utilized by the public such as the litigants' stations in a courtroom.*

A11.3.1(2) *Fixed or Built-in Seating and Tables. Providing appropriate maneuvering space in the room and knee clearance under tables should be considered when selecting furniture for accessible areas that will be used by jurors.*

A11.4.2(2) *Restrooms. The requirements of 4.22 for toilet rooms and 4.23 for bathrooms, bathing facilities, and shower rooms do not preclude the placement of toilet or bathing fixtures within housing or holding cells or rooms as long as the requirements for toilet rooms and bathrooms, including maneuvering space, are met. In such instances, the maneuvering space required within housing or holding cells or rooms may also serve as the maneuvering space required in toilet rooms by 4.22 or in bathrooms or shower rooms by 4.23.*

A11.4.2(3) *Beds. The height of beds should be 17 to 19 in (430 mm to 485 mm) measured from the finish floor to the bed surface, including mattresses or bed rolls, to ensure appropriate transfer from wheelchairs and other mobility aids. Where upper bunks are provided, sufficient clearance must be provided between bunks so that the transfer from wheelchairs to lower bunks is not restricted. Figure A3 provides average human dimensions that should be considered in determining this clearance.*

A11.4.3 Visiting Areas. *Accessible cubicles or portions of counters may have fixed seats if the required clear floor space is provided within the area defined by the cubicle. Consideration should be given to the placement of grilles, talk-thru baffles, intercoms, telephone handsets or other communication devices which should be usable from both the fixed seat and from the accessible seating area. If an assistive listening system is provided, the needs of the intended*

A11.7 Two-Way Communication Systems

user and characteristics of the setting should be considered as described in A4.33.7 and Table A2.

A11.7 Two-Way Communication Systems. *Two-way communication entry systems must provide both voice and visual display so that persons with hearing or speech impairments can utilize the system. This requirement may be met with a device that would allow security personnel to respond to a caller with a light indicating that assistance is on the way.*

A11.8 *Courtrooms, hearing rooms (including judges' chambers when used as hearing rooms), jury deliberation and jury orientation rooms, and all meeting rooms designated for public use should be designed to take advantage of current and emerging technologies for providing information to persons with disabilities. Since such persons may be litigants, jurors, witnesses, spectators, attorneys or courtroom personnel, it is important that the designated rooms be wired to support appropriate systems or that conduits or raceways be provided to facilitate future wiring as systems are added. For example, the use of so-called "smart" technology often includes bundled wiring harnesses which can be easily installed in new construction and can support a variety of current and future uses.*

A11.9 Permanently Installed Assistive Listening Systems. *In addition to the requirement for permanently installed assistive listening systems, 11.8 (Electrical Outlets, Wiring, Conduit for Communication Systems) requires that all courtrooms, hearing rooms, jury deliberation and jury orientation rooms, and meeting rooms designated for public use in judicial, legislative or regulatory facilities have electrical outlets and wiring, conduit or raceways to support communication equipment. This requirement is to facilitate the use of portable assistive listening systems.*

A11.9(1) *Judicial Facilities. Due to the large variation in the methods of assignment of courtrooms among jurisdictions, it is impossible to include an exhaustive list of each "type" of courtroom. "Type" is generally meant to include such distinct categories as civil courtroom(s), criminal courtroom(s), and family courtroom(s). For example, if a courthouse has seven courtrooms and three are assigned to criminal matters, two are assigned to civil matters and two are assigned to family law matters, then 11.9 would require that at least two criminal courtrooms, one civil courtroom and one family law courtroom have a permanently installed assistive listening system. In those facilities where courtrooms are not dedicated to a single type of proceeding, 11.9 would require that 50 percent of all courtrooms provided have a permanently installed assistive listening system.*

A11.9(2) *Legislative and Regulatory Facilities. Permanently installed assistive listening systems are not required in conference rooms restricted to use by employees, consultants, and other invited guests or areas which are only occasionally or sporadically used for legislative or regulatory business such as a school board meeting held in a high school cafeteria. However, the Department of Justice's regulations implementing title II of the ADA require public entities to take such steps as may be necessary to ensure effective communication with individuals with hearing impairments, unless it would result in a fundamental alteration in the nature of a service, program, or activity or in undue financial and administrative burdens. See 28 CFR 35.160(a) and 28 CFR 35.164. Accordingly, a portable assistive listening system may be needed to provide communication access in the school board meeting held in the cafeteria.*

A12.0 Detention and Correctional Facilities.

A12.1 General. *All common use areas serving accessible cells or rooms are required to be accessible. In detention and correctional facilities, common use areas include those areas serving a group of inmates or detainees, including, but not limited to, exercise yards and recreation areas, workshops and areas of instruction or vocational training, counseling centers, cafeterias, commissaries, medical facilities, and any other rooms, spaces, or elements that are made available for the use of a group of inmates or detainees. Detention and correctional facilities also contain areas that may be regarded as common use areas which specifically serve a limited number of housing cells or rooms. Where this occurs, only those common use areas serving accessible cells or rooms would need to be accessible as required by 12.5. For example, several housing cells may be located at and served by a dayroom or recreation room. In this instance, only those dayrooms serving accessible housing cells or rooms would need to be accessible. However, common use areas that do not serve accessible cells but that are used by the public or by*

employees as work areas are still subject to the requirements for public use areas and employee work areas in sections 4.1 through 4.35.

A12.3 Visiting Areas. *Accessible cubicles or portions of counters may have fixed seats if the required clear floor space is provided within the area defined by the cubicle. Consideration should be given to the placement of grilles, talk-thru baffles, intercoms, telephone handsets or other communication devices which should be usable from both the fixed seat and from the accessible seating area. If an assistive listening system is provided, the needs of the intended user and characteristics of the setting should be considered as described in A4.33.7 and Table A2.*

A12.4.1(2) *Dispersion. The terms "categories" and "types" with respect to holding or general housing cells or rooms include security levels, and necessary classifications or distinctions such as male/female and adult/juvenile. The requirement for the dispersion of accessible cells or rooms among all categories and types is required only to the extent possible under the three percent minimum scoping; it does not require an increase in the minimum number of accessible cells or rooms required for the facility. Thus, the requirement for dispersion does not supersede the three percent minimum scoping. The amount or percentage of accessible cells or rooms to be provided in each available housing category or level of security is not specified since dispersion is not required to be proportionate to the total number of cells in each category or security level.*

Many detention and correctional facilities are designed so that certain areas (e.g., "shift" areas) can be adapted to serve as different types of housing according to need. For example, a shift area serving as a medium security housing unit might be redesignated for a period of time as a high security housing unit to meet capacity needs. Placement of accessible cells or rooms in shift areas may allow additional flexibility in meeting requirements for dispersion of accessible cells or rooms.

A12.4.3 Accessible Cells or Rooms for Persons with Hearing Impairments. *Many correctional facilities do not provide permanently installed telephones or alarms within individual housing cells. Such facilities are not subject to the requirements of 12.4.3. However, some categories of housing, such as minimum security prisons, may be equipped with such devices. The minimum three percent is based on the number of cells or rooms equipped with these devices and not on the total number of cells or rooms in the facility. In addition, this requirement applies only where permanently installed telephones or alarms are provided within individual cells. Permanently installed telephones and alarms located in common use areas, such as dayrooms, are required to be accessible according to ADAAG requirements for common use areas. See 12.1.*

A12.4.4 Medical Care Facilities. *Medical isolation cells required to be accessible by 12.4.2 shall not be counted as part of the minimum number of patient bedrooms or cells required to be accessible in 12.4.4. Thus, if a medical care facility has both types of cells, at least one medical isolation cell must be accessible under 12.4.2 in addition to the number of patient bedrooms or cells required to be accessible by 12.4.4. Consistent with the requirement for special purpose cells in 12.4.2, at least one medical isolation cell per facility is required to be accessible. However, it is recommended that consideration be given to ensuring the accessibility of all medical isolation cells.*

A12.5.2(2) *Restrooms. The requirements of 4.22 for toilet rooms and 4.23 for bathrooms, bathing facilities, and shower rooms do not preclude the placement of toilet or bathing fixtures within housing or holding cells or rooms as long as the requirements for toilet rooms and bathrooms, including maneuvering space, are met. In such instances, the maneuvering space required within housing or holding cells or rooms may also serve as the maneuvering space required in toilet rooms by 4.22 or in bathrooms or shower rooms by 4.23.*

A12.5.2(3) *Beds. The height of beds should be 17 to 19 in (430 mm to 485 mm) measured from the finish floor to the bed surface, including mattresses or bed rolls, to ensure appropriate transfer from wheelchairs and other mobility aids. Where upper bunks are provided, sufficient clearance must be provided between bunks so that the transfer from wheelchairs to lower bunks is not restricted. Figure A3 provides standard human dimensions that should be considered in determining this clearance.*

A12.6.2 Equivalent Facilitation. *Auxiliary aids, such as telephone handset amplifiers and portable visible alarms may be used instead of permanent devices. The Department*

A13.0 Accessible Residential Housing

of Justice's regulation implementing title II of the ADA requires public entities to make available appropriate auxiliary aids and services where necessary to ensure effective communication unless it would result in a fundamental alteration in the nature of a service, program, or activity or in undue financial and administrative burdens. See 28 CFR 35.160(a), 35.164.

A13.0 Accessible Residential Housing.

A13.1(1) *Section 13 outlines the technical requirements for dwelling units subject to title II of the ADA. The facilities covered by this section, as well as other facilities not addressed or covered by this section, may still be subject to other Federal laws such as the Fair Housing Amendments Act of 1988 (42 U.S.C. 3604 et seq.) and section 504 of the Rehabilitation Act of 1973 (29 U.S.C. 794). For example, the Fair Housing Amendments Act requires that all units served by an elevator be adaptable according to guidelines established by the U.S. Department of Housing and Urban Development (HUD). Further information on these laws and the appropriate regulations may be obtained from HUD.*

In addition, the requirements for transient lodging in section 9 differ from residential housing in this section. Residential housing includes, but is not limited to, single-family homes, which may be a facility consisting of one dwelling unit, and multifamily dwelling facilities, which are those facilities consisting of more than one dwelling unit. A facility may consist of more than one building within a single site, such as garden apartments and townhouses. Examples of single-family dwelling units that must be accessible include official residences, such as those provided for governors and State university presidents and single-family housing provided as public housing. Multifamily dwelling units include public housing projects and apartments. Residential housing also includes dwelling units that are used to accommodate live-in employees such as faculty, visiting fellows, care-takers, rangers and curators. With respect to colleges and universities, student apartments containing dwelling units are considered residential housing.

A13.1(2) *Common use areas are subject to the applicable requirements of 4.1 through 4.35. Common use areas include hallways, corridors within and walks around or connecting buildings. For example, room numbers identifying dwelling units along a corridor are subject to the requirements for raised and brailled signage as required by section 4.1.3(16). Similarly, exterior walks must be accessible so that at least one accessible route connects accessible buildings, facilities, elements, and spaces on the same site as specified by section 4.1.2(2). A sufficient number of accessible multiple common use recreation facilities should be provided to ensure equitable opportunities for persons with disabilities. If recreation facilities are dispersed in a large facility, then tenants and guests with disabilities should not have to travel far greater distances than others to access recreation facilities. The term "common use" excludes spaces wholly within a dwelling unit. For example, official residences such as Governors' mansions contain facilities used for official functions. These areas are not within the private residence itself, and must be accessible both to residents and to the public.*

A13.2.1 *In determining the minimum number of accessible dwelling units, any fraction must be rounded upwards to the next whole number. It is not uncommon for facilities to offer one, two, and three bedroom units. Facility planners and designers need to consider that persons with disabilities and their families require access to all types of dwelling units offered in a facility. Neither section 13.3.1 or 13.2.2 requires proportionate distribution of accessible units among all unit sizes. However, at least one of each unit size according to the number of bedrooms provided must be accessible even if doing so would exceed the minimum number requirements of 13.2.1(1). Providing accessibility to each unit type according to the number of bedrooms provided will be more cost-effective than retrofitting inaccessible dwelling units to accommodate individuals with varying needs.*

A13.2.2 New Construction: Dispersion. *When dispersing accessible dwelling units throughout a facility, persons with disabilities must have the same choices regarding the type of unit as other members of the public. Types of dwelling units include single-family and multifamily; one, two, three or more bedrooms; official residences and certain employee and student apartments. Amenities may include dishwashers, laundry equipment, fireplaces, and walk-in closets. It is not acceptable to offer only one-bedroom accessible apartment units, when apartment units or single-family units*

with two and three bedrooms are also offered in the same facility. On a university campus official residences that are not interchangeable must be accessible. Therefore, a three bedroom graduate apartment cannot be made accessible in lieu of making the President's residence accessible. However, if several single-family residences are provided for visiting fellows and they are interchangeable, then only five percent of those dwelling units must be accessible. Additionally, if some dwelling units are provided with dishwashers while others are not, some accessible units must have dishwashers. In addition, the availability of other amenities such as view or the proximity to recreation facilities must also be comparable. For example, not all accessible units should be located on a side of a building overlooking an interior courtyard if other units have exterior views.

A13.2.3 Alterations: Minimum Number and Dispersion. *The following example illustrates the requirements of 13.2.3(1). An existing facility containing one hundred multi-family residential dwelling units is the subject of ten consecutive alterations over a period of ten years. Each year, ten units are altered. During the first five years, at least one unit of the ten altered units must comply with 13.3 and 13.4 (five percent but not less than one) until the total number, five percent, required for the facility overall is achieved. Similarly, as part of the alterations during the first two years, one unit complying with section 13.4 must be provided in addition to those which are accessible to people with mobility and hearing impairments until the two percent minimum is achieved. Section 3.5 defines the term "Alteration". Consistent with that definition, merely repairing or replacing an oven would not necessarily be an alteration. For example, replacing an oven in an apartment that is not required to be accessible is not an alteration. However, replacing an oven in an apartment that is required to be accessible is an alteration because it affects the usability of the dwelling unit.*

A13.3.2 Minimum Requirements. *An accessible second exit from dwelling units is recommended for emergency evacuation purposes.*

A13.3.4(5) *Sinks. Installing a sink with a drain at the rear so that plumbing is as close to the wall as possible can prevent garbage disposal units from obstructing the required clear knee space.*

A13.3.4(6) *Ranges and Cooktops. Although not required for minimum accessibility, countertop range units in a counter with adjustable heights can be an added convenience for wheelchair users.*

A13.3.4(7) *Ovens. Countertop or wall-mounted ovens with side-opening doors provide greater access. Clear space at least 30 in (760 mm) wide under counters at the side of conventional and self-cleaning ovens is an added convenience. The pull-out board or fixed shelf under side-opening oven doors provides a resting place for heavy items being moved from the oven to a counter.*

A13.3.4(8) *Refrigerators and Freezers. Side-by-side refrigerators and freezers provide the most usable freezer compartments. Locating refrigerators so that their doors can swing 180 degrees provides greater access by increasing maneuvering space so that knee and toe clearance is provided on the hinge side. Reaching items placed far back on the hinge side will be easier if the door arrangement permits the optimal maneuvering space.*

A13.3.4(10) *Kitchen Storage. Pantry type cabinets or tall cabinets can be provided rather than cabinets mounted over work counters. Additional storage space located conveniently adjacent to kitchens can be provided to make up for space lost when cabinets are not provided under sinks and work surfaces.*

A13.4.1(1) *Alarms. Some residents including those who are deaf-blind will not be capable of responding to a visible alarm. In those instances the facility operator may have a responsibility to provide an alternative method of alerting residents of emergencies. Alternative methods may include devices such as tactile bedframe alarms for sleeping individuals and other vibrotactile devices worn by occupants during the day.*

A14.0 Public Rights-of-Way

A14.0 Public Rights-of-Way.

A14.1 *Most public rights-of-way are coincident with and include roadways. However, some are established as easements to provide pedestrian access to a public facility through a private site or series of properties. A downtown pedestrian street that occupies public space between private building and property lines is also part of the public right-of-way.*

The public right-of-way does not include public sites, such as those that contain public buildings, parks, and plazas, nor does this section apply to pedestrian facilities on public or private sites adjacent to the public right-of-way, such as a campus or complex of buildings. These public and private sites must be designed, constructed, or altered to meet the requirements of 4.1 through 4.35, which require that an accessible route be provided to connect accessible elements and facilities on a site to public transportation stops, streets, or public sidewalks. Section 14 applies only to the public pedestrian circulation network within the public right-of-way that connects and provides public access to the public and private sites along its borders. However, where an accessible route required within a site uses the public sidewalk, the public sidewalk must comply with requirements for an accessible route for that segment.

Work in the public right-of-way may include the widening or realignment of a public roadway, the construction or installation of site improvements and pedestrian amenities on or along a public sidewalk, or the upgrading of a subsurface water system, sewer, or utility below a public sidewalk, curb-and-gutter, or street. Projects may be undertaken within the clearly defined boundaries of a street frontage along a block, at an intersection, or in the right-of-way of a commercial district or may consist of the installation of a typical item (e.g., drinking fountains, toilets, benches, public sidewalk curb ramps, landscaping, telephones, signage, bus shelters) dispersed along public sidewalks throughout an area or jurisdiction.

Work in the public right-of-way that is undertaken by private entities under standards imposed by a State or local government must comply with section 14. Jurisdictions that may later accept pedestrian facilities constructed in rights-of-way developed by private entities should ensure through the permitting process that such elements will also meet the requirements of this section.

Technical provisions in ADAAG 4.2 to 4.35 apply to public rights-of-way unless modified by ADAAG 14 to address site conditions particular to the public right-of-way. Therefore, a public sidewalk curb ramp in the public right-of-way is subject to the technical provisions of ADAAG 14.2.4 (Public Sidewalk Curb Ramps) and not to ADAAG 4.7 (Curb Ramps). A public sidewalk in the public right-of-way is subject to the technical provisions of ADAAG 14.2.1 (Public Sidewalks), which substitutes a continuous passage for the accessible route required in ADAAG 4.1. However, some technical provisions in ADAAG 4.2 to 4.35, such as those contained in 4.2.4 (Clear Floor or Ground Space for Wheelchairs), 4.9 (Stairs), and 4.27 (Controls and Operating Mechanisms), have not been modified for application to the public right-of-way and therefore apply to work covered by this section.

A14.1.1 Definitions.

Continuous Passage. *A continuous passage along a public pedestrian right-of-way is analogous to the accessible route within a site or building. Although public sidewalks are subject to technical provisions similar to those that apply to accessible routes, public sidewalks are not required to meet guidelines for accessible routes unless the public sidewalk is used to provide the required accessible route connecting accessible elements on a site.*

Public Sidewalk. *Public sidewalks include any exterior walkway in the public right-of-way intended for pedestrian use, whether raised to curb height, separated horizontally by a parkway, or surfaced for pedestrian use along the shoulder of a roadway. Although most public sidewalks border streets and roadways, pedestrian streets developed in urban areas and public pedestrian easements that do not parallel vehicular ways but are part of a pedestrian circulation network in the public right-of-way are also included. Where pedestrians and cyclists are intended to share a route in the public right-of-way, the route must meet requirements for public sidewalks.*

A14.2 New Construction: Minimum Requirements. *New construction includes work which is constrained primarily by topographic features, as for example, the design of a new subdivision, new town, or an expansion of jurisdictional limits to incorporate as yet undeveloped land. When new rights-of-way are established, sufficient width should be allotted*

to permit new public sidewalks, if provided, to comply with 14.2.1 and 14.2.4. New construction anticipates a high degree of accessibility and usability in features newly planned and provided within the public right-of-way.

A14.2.1 Public Sidewalks. *Public sidewalks in the public right-of-way include paved pedestrian walkways raised to curb level or separated horizontally from adjacent roadways by parkways and similar divisions, as well as unseparated roadside routes with prepared surfaces where these are intended for pedestrian circulation, as permitted in undeveloped rural areas. Public sidewalks that are vertically or horizontally separated from adjacent vehicular ways are safer for all pedestrians. Routes delineated only by pavement markings can be made more discernible if a distinct edge is provided.*

The continuous passage in a public sidewalk takes the place of the accessible route on a site. The continuous passage has a vertical as well as a horizontal component and should be considered a protected volume of space. However, headroom clearances apply across the entire width of a public sidewalk, not just to the continuous passage. Permanently-installed street appurtenances such as lighting standards, fire hydrants, utility poles, drainage inlets, access covers, and traffic signals and controls must be carefully located during the design stage of a project to avoid conflict with pedestrian routes. Designers who employ standard design templates for public sidewalk and public sidewalk intersection design provide a more predictable and usable environment for pedestrians. Most such templates include curbside strips in which street furnishings, landscaping, and other equipment and fittings are accommodated, leaving the public sidewalk itself open, straight, and free of obstructions.

A14.2.1(2)(a) *Several options are available even when public sidewalk running slopes are extreme. Terraced construction that provides accessible curbside parking and level areas across a new public sidewalk can provide connections to entrances along a steeply sloping pedestrian route. Intermediate landings with benches can serve as resting and passing spaces to ameliorate some effects of such grades. Additionally, operational methods may enhance accessibility. For example, full block developments can provide accessible entrances connecting to interior accessible routes that use elevators within facilities to serve different public sidewalk levels. However, operating hours that may restrict the availability of these interior routes limit their usefulness.*

The provisions of section 14 do not preclude public sidewalk segments at different levels or public sidewalks with stairs (which may be advantageous in providing access to building entrances along steeply sloping sites) provided that accessible elements, including entrances, can be reached from the public sidewalk or continuous passage. Where a public sidewalk contains steps or where public sidewalk levels diverge, a railing, planter or other barrier separating the levels is recommended. Because such stairs will typically occur in steeply sloping public sidewalks, it is important that the alternate route they offer be accessible for those persons with mobility impairments who can more easily use stairs.

Stairs abutting a public sidewalk and serving a building on a private site should have uniform riser heights and tread widths for maximum discernibility. Stairs or steps that disappear into the grade of the adjoining public sidewalk are hazardous for many pedestrians.

A14.2.1(2)(b) *Narrow public sidewalks immediately adjacent to the curb or roadway may be offset to avoid a non-conforming cross slope at driveway aprons by diverting the public sidewalk around the apron. Public sidewalks separated from the curb or roadway by a planted parkway can accommodate an apron within the width of the parkway (see Fig. A9).*

A14.2.1(3) *Public sidewalk surfaces should fall generally along a single plane from landing to landing. However, landings, public sidewalk curb ramps, and other elements must be blended within the public sidewalk. Although such changes in plane cannot be avoided, they should be minimized within a length of public sidewalk. Gratings in public sidewalks that are located where pedestrian travel directions intersect, such as at corners, must be designed with minimum opening sizes that comply in both directions of travel. The proportions of large areas of gratings, such as those necessary to ventilate transformer vaults or subway structures, may be varied to maintain the surface area required while still providing a 36 in (915 mm) continuous passage along the public sidewalk. For example, a long but narrow run of gratings can provide the same rate of ventilation as a square installation, but would avoid*

A14.2.3 Fixed Street Furnishings

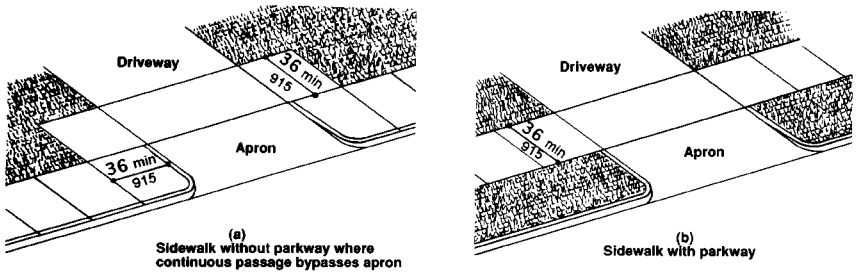

Fig. A9
Sidewalks at Driveway Aprons

the need to increase overall public sidewalk width in order to provide a grating-free continuous passage within the width of the public sidewalk. Alternatively, such gratings may be located within the street surface, as are some drainage inlets and similar fittings.

A14.2.2 *The requirement of a continuous passage within the public sidewalk is intended to provide accessibility for persons with mobility impairments. However, because pedestrians with vision impairments may use any portion of the public sidewalk, provisions for protruding objects apply to its entire width. Elements that overhang a public sidewalk are covered even though they may not arise from the public sidewalk. Tree branches are a particular hazard when they intrude into the required clear headroom of 80 in (2030 mm). Many other objects on or along a public sidewalk, such as newspaper vending machines, trash receptacles and construction barricades, are not fixed and thus are not subject to these guidelines but may nevertheless be covered under the Department of Justice regulation regarding maintenance of accessible features. (See 28 CFR 35.133).*

A14.2.3 Fixed Street Furnishings. *Street furnishings may be provided by a public entity, as in the case of benches, drinking fountains, and signage; be installed under public franchise or similar agreement, as public pay telephones or single user toilet facilities; or be put in place by another government authority, as are fire alarm boxes.*

A14.2.3(4) *Fixed Seating, Tables, and Benches. Where benches are grouped at a single location, such as those provided in a seating area constructed as part of a downtown improvement project, each location at which a seating area is provided should contain accessible benches. However, at bus stops or along a street frontage where seating is dispersed and only a single bench is provided at a location, the application of the 50 percent requirement will result in each bench being accessible.*

A14.2.4 Public Sidewalk Curb Ramps. *In section 14, ADAAG 4.7 (Curb Ramps) has been replaced by 14.2.4 (Public Sidewalk Curb Ramps) to reflect differing requirements in the public right-of-way. A landing permits pedestrians to bypass the flares and ramp run of a perpendicular public sidewalk curb ramp and allows persons using wheelchairs to turn and enter the ramp with all four wheels in contact with the surface. When a perpendicular public sidewalk curb ramp interrupts the path of travel and cannot be bypassed, its running slope and flares have the same effect on a person using a wheelchair as would a severe cross slope along that route. Persons with low-powered chairs or poor control have particular difficulty with the combined effect of these running and cross slopes.*

Where a curb is six in (151 mm) high, a new perpendicular public sidewalk curb ramp and landing would necessitate a minimum curb-face to back-of-sidewalk width of approximately 12 ft (3.6 m) (see Figs. 59(a) and 60(a) and (b)). In

A14.2.4 Public Sidewalk Curb Ramps

narrower rights-of-way outside commercial districts, particularly those in residential neighborhoods, parallel public curb ramp (depressed sidewalk) design and construction (see Figs. 59(b) and 60(c)) can provide the required accessibility, although other alternatives, such as projected intersections (see Fig. 60(e)), lesser curb heights, and combinations of parallel and perpendicular public sidewalk curb ramps (see Figs. 59(c) and 60(d)) may also provide access to street crossings. Jurisdictions may also wish to commit additional right-of-way or utilize setbacks at public sidewalk corners and intersections in order to accommodate landings at the tops of perpendicular public sidewalk curb ramps.

State and local governments are encouraged to require a right-of-way width sufficient to ensure that perpendicular public sidewalk curb ramps can be provided. However, jurisdictions are not required to provide a greater right-of-way width than would otherwise be planned under regulations, guidelines, or practices normally applied to new development. Right-of-way width may be based on zoning, land use, pedestrian volume or population densities, transportation master plans, or similar factors. Since these guidelines prohibit decreasing the accessibility of the public pedestrian circulation network, jurisdictions should anticipate the need for future roadway widenings by establishing an initial right-of-way that can accommodate future growth and development.

Perpendicular public sidewalk curb ramps that are 36 in (915 mm) wide and installed adjacent to a parkway to serve a single crossing direction need only one side flare at a 1:10 slope, thus greatly lessening space requirements. This permits the corner radius of the public sidewalk to have a generous waiting area at full curb height, increasing the discernibility of the border between public sidewalk and street crossings. Where depressed corners, raised street crossings, or wide diagonal public sidewalk curb ramps are installed, the boundary between pedestrian and vehicular areas at corners is undefined. For these reasons, these designs are not permitted in new construction.

Standardization of public sidewalks, public sidewalk curb ramps, and street crossings is encouraged in new construction. Consistency in the design of public sidewalks, parkways and landscaping setbacks, street furnishing zones, signage, and crossing signals and markings will increase the predictability, and may improve the usability and safety, of the public pedestrian network.

A14.2.5(1) *Crossing Controls. A standard public sidewalk design template utilizing a parkway can accommodate crossing controls at the top of a public sidewalk curb ramp with a returned edge along the planting strip (see Fig. 60(a)). Post-mounted controls can be located outside the public sidewalk proper but easily accessible to those waiting to use the public sidewalk curb ramp or street crossing.*

There is a wide variety of audible and vibrotactile crossing signals available in the US and abroad. Mechanical devices added to walk/don't walk crossing signals buzz, tweet, chime, talk, and, in Japan, play refrains from popular tunes at intersections. Many are available with adjustable volume controls, demand controls, or time clocks to limit hours of operation. Broadcast systems employing fixed transmitters and handheld pedestrian receivers can make a range of street crossing data available to individuals. Vibrating devices, more common in Europe, can indicate the separate phases of a visible crossing signal or street light.

A14.2.5(2) *Marked Crossings. Marked crossings are of particular use to pedestrians with low vision and are of greatest assistance at irregular intersections and mid-block crossings. The Manual on Uniform Traffic Control Devices (MUTCD) published by the FHWA recommends solid white lines for marked crossings. However, many urban street crossings are delineated in brick or other unit paving materials, particularly where design standards have been developed for an historic district or other significant area. When adjacent public sidewalks are similarly paved, it is difficult to distinguish between public sidewalk areas and street crossings, particularly if depressed public sidewalks have been installed in lieu of well-defined public sidewalk curb ramps. Furthermore, many colors in the brick range cannot be distinguished by persons with color blindness. The use of markings with a strong visual contrast, both between public sidewalk surfaces and crossings and between street surface and crossing markings, is encouraged.*

A14.2.5(3) *Islands. A visual contrast like that required on public sidewalk curb ramps and landings that connect to street crossings is*

A14.2.5(4) Pedestrian Overpasses and Underpasses

recommended. Persons using wheelchairs need a minimum length of 48 in (1220 mm) within the island to be out of traffic lanes.

A14.2.5(4) *Pedestrian Overpasses and Underpasses. Circular ramps cannot meet requirements for slope, cross slope, and level landings and are difficult for persons using wheelchairs. Their non-uniform cross slopes do not provide a plane to allow all wheels to contact the ground at the same time. This makes it difficult to control a wheelchair, particularly on a downhill run, and presents a constant tipping hazard for some types of motorized chairs. Furthermore, much of the effort of propelling a hand-powered wheelchair on such ramps must go into overcoming cross slope rather than rise. Circular ramps do not have landings required by 4.8 (Ramps) and thus do not provide rest areas for persons with limited stamina or those using wheelchairs.*

Below-grade and elevated pedestrian networks in the public right-of-way (e.g., skywalks and pedestrian tunnels) are considered to be pedestrian overpasses and underpasses. To the extent that these networks are: (1) developed under the authority of a State or local government; (2) are intended for public pedestrian access, circulation, and use; and (3) occupy, along at least some of their length, air or ground rights in the public right-of-way, they must be accessible. Because topography will not be a consideration, it should be possible in new construction to provide a level route along the continuous passage, which will typically connect to surface circulation networks by means of elevators, which may be provided in private facilities or at transit stations. ADAAG 4.3.1 requires skywalks and tunnels that are part of an accessible route on a site or within a facility to comply with 4.3 (Accessible Route). Where such construction lies in the public right-of-way and connects above or below grade to the accessible routes required of facilities on private sites, these pedestrian circulation networks must provide a continuous passage and comply with other provisions of this section. Direct connections from transit facilities are covered by ADAAG 10.3.1(3). Additionally, elements placed along above-grade or below-grade public pedestrian routes must comply with the requirements of ADAAG 14.

Overpasses and underpasses in hilly terrain may be approached at or near grade by public sidewalks with a grade at or less than 1:20. However, the construction of an overcrossing or undercrossing facility offers the opportunity to provide ramp slopes that could not be achieved adjacent to roadways.

A14.2.6(1) *On-Street Parking. New on-street parking may result from the extension of a public right-of-way, the planning and development of a new town center, the reconstruction of a segment of a roadway and its public sidewalks, the implementation of a downtown revitalization program, or a similar program or project. The application of the scoping table at 4.1.2(5)(a) shall be based upon the overall numbers of new parking spaces planned within a project or project area. For example, in a downtown revitalization program that includes the construction of new site amenities and on-street parking along both sides of a street for several blocks, the project area is the scope of work described in the contract for the work. The chart at 4.1.2(5)(a) shall be applied to the total number of parking spaces provided in the project. If an additional project is undertaken nearby, it too shall provide accessible parking spaces based upon the application of the table to the total number of spaces provided within the boundary of the project. Planners must carefully consider dispersion requirements, balancing user convenience to high-volume destinations and locations where street and public sidewalk slope are minimal to provide maximum accessibility.*

On-street parking may be parallel, perpendicular, or angled. Perpendicular parking along public streets will be similar to parking in lots and garages. However, while slopes at access aisles in lots and garages on sites can be no greater than 1:50 in any direction, the slopes of access aisles on streets are limited only to the minimum feasible slope. Parallel and perpendicular accessible spaces allow a driver to locate the access aisle on either the passenger or driver side as necessary for transfer and therefore may share an access aisle. Because angled spaces are approached from only one direction, a driver cannot always select a space with an access aisle that will accommodate the desired transfer. Therefore, angled parking spaces may not share an access aisle.

On-street convenience parking requirements do not apply in residential or other neighborhoods where parking is permitted without delineation, metering, or time limits.

A14.2.6(4) *Motorist Aid Communications Systems. The approach area at the callbox must be connected to the roadway shoulder, public sidewalk or pedestrian path by means of a continuous passage. This does not require that paved shoulders or public sidewalks be provided, but it does require that a person using a wheelchair be able to reach the approach area from the roadway shoulder. This would prohibit the approach area from being separated from the roadway by a ditch, gutter, curb, or other barrier.*

A14.3 Alterations. *The Department of Justice preamble to the amended regulation implementing title II of the ADA provides guidance on alterations work that may give rise to a path of travel obligation.*

When additional right-of-way is acquired for road-widening, sufficient width should be provided to permit public sidewalks to comply with 14.2.1 and 14.2.4. Jurisdictions contemplating roadway improvements must ensure that the accessibility of their public sidewalks and public sidewalk curb ramps and street crossings are not adversely affected.

Site infeasibility is the basis for exceptions and special technical provisions in 14.3. A finding of site infeasibility may be warranted in the following situations: (1) the existence of an underground structure, such as a utility vault, manhole, or sewer inlet at a street crossing, which may preclude the installation of a new public sidewalk curb ramp in full compliance with provisions for new construction; (2) the geometric design of existing roadways, bridges, or tunnels constrained by structural elements that, even when altered, may not accommodate a 36 in (915 mm) wide public sidewalk; (3) differences in finished grade at curbside and elevations at existing building entrances at the back-of-sidewalk which may preclude compliance with cross slope provisions across the entire public sidewalk width; (4) existing fixed equipment, such as fire hydrants or street lighting standards, located on a public sidewalk and connected to below-grade water, power, signal, and similar distribution systems which may prevent full compliance with public sidewalk curb ramp provisions if the equipment cannot be relocated in the course of the work; (5) existing narrow public sidewalks or rights-of-way that might preclude the maintenance of a continuous passage free of gratings required for new subway construction; or (6) the existence of an established landscaping feature, such as a large tree or grouping of trees, that may preclude the provision of a parallel access aisle at a newly-established on-street parking space. Furthermore, a pre-existing commercial use of the public sidewalk, as for a sidewalk cafe, may also constitute site infeasibility if no other location for an accessible parking space is feasible within the scope of the alterations project.

A finding of site infeasibility must be made relative to each feature of accessible elements. For example, although a finding of site infeasibility may be made with respect to the length of a required curb ramp landing, the slope, cross slope, and other features of the curb ramp must comply with new construction provisions, if feasible. As in new construction, jurisdictions are not required to provide a greater right-of-way width than would otherwise be planned for an alteration. For instance, the acquisition of additional right-of-way from adjacent public or private sites or properties to accommodate accessible on-street parking spaces is not required if such expansion is not otherwise planned as part of the scope of an alterations project.

Newly installed elements required to be accessible should be reasonably dispersed within a project area or scope of work. However, where one area of a project already has more existing accessible elements than another area, the new accessible elements should be dispersed within a portion of the project area where there are fewer or none, or at project boundaries with areas not served by existing accessible elements. Where there are no existing accessible elements, distribution may be uniformly dispersed or dispersed in the same proportion as all units within the project scope or area.

New construction requirements for level approach and operating spaces for persons in wheelchairs may not always be feasible in alterations. Designers must carefully balance dispersion requirements against site characteristics to achieve maximum accessibility.

A14.3.2(1) *Public Sidewalks. Cross slopes on portions of public sidewalks adjacent to the continuous passage required by 14.2 may exceed 1:50 (two percent) provided that the adjacent portions are smoothly blended. This may facilitate connecting the continuous passage to building entrances, sites, or other pedestrian circulation elements.*

A14.4 Temporary Work

A14.3.2(2) *Public Sidewalk Curb Ramps. Controlled cross slope is a critical factor in the usability of public sidewalks, public sidewalk curb ramps and their landings, and street crossings. Of primary concern in the design of public sidewalk curb ramps planned for installation as alterations to existing rights-of-way should be the provision of a level landing with a slope of no more than 1:50 in any direction at the top or bottom of the public sidewalk curb ramp. A perpendicular public sidewalk curb ramp and landing complying with 14.2.4(2) and serving a single street crossing offers pedestrians the maximum usability and detectability. Where necessary to accommodate to the width of an existing pedestrian right-of-way, the running slope of a perpendicular public sidewalk curb ramp may be increased to a maximum of 1:10 for six in (150 mm) of rise, and landing length may be reduced to 36 in (915 mm). In narrower pedestrian rights-of-way or where existing site improvements preclude the installation of a perpendicular public sidewalk curb ramp, it may be necessary to provide a parallel public sidewalk curb ramp, where the change in level is accomplished by ramping the sidewalk itself down to a landing at street level. Such construction can provide a level landing for a 90 degree turn when pedestrian rights-of-way are less than six ft (1830 mm) wide. Alternatively, a combined (perpendicular and parallel) sidewalk curb ramp can be installed in which a segment of the public sidewalk is ramped or depressed to accomplish part of the level change and the balance is achieved by a short perpendicular sidewalk curb ramp at a slope as steep as 1:8 for a three in (75 mm) rise. The single landing serving the combined public sidewalk curb ramps must be a minimum of 60 in (1525 mm) in length along the public sidewalk if feasible; however, a landing 48 in (1220 mm) in length is permitted where site infeasibility precludes a 60 in (1525 mm) landing length. Only when these alternatives cannot provide usability should a diagonal curb ramp and landing (a single perpendicular public sidewalk curb ramp serving both street crossing directions) be installed. As a last option, in rare instances where pedestrian rights-of-way are severely constrained and other public sidewalk curb ramp types cannot be constructed, a built-up or projected ramp may be provided. Where the change in level between existing public sidewalks and adjacent streets exceeds commonly-specified curb heights, usability cannot be achieved by means of a public sidewalk curb ramp. In such cases, it may be possible to provide access to street crossings with ramps complying with ADAAG 4.8 (Ramps) within the width of the public sidewalk. Where public sidewalk levels diverge, a railing or other edge protection is advisable.*

A14.4 Temporary Work. *Construction occupying or disrupting the surface of a public sidewalk is a particular hazard to pedestrians with vision impairments if the work is not adequately protected by barriers. Persons who use long canes may not detect a tape or a series of widely spaced traffic cones placed around a construction site. Such marking does not provide sufficient cuing to enable a pedestrian to anticipate a hazard nor does it provide an edge along which to travel around an obstruction and should not be considered a barrier. Jurisdictions and their contractors should ensure that barriers establishing a temporary passage around public sidewalk and street construction meet the needs of all pedestrians. Scaffolding in the public right-of-way should be carefully designed in order to avoid creating protruding objects along the public sidewalk.*

The removal, even for only a short time, of a public sidewalk curb ramp or other accessible element may preclude access to buildings, facilities, or areas by a person using a wheelchair or require a lengthy and circuitous route to bypass such barriers in order to reach regular destinations. The alternate route should be convenient and accessible for all public sidewalk users and should be clearly marked to avoid extra travel distance.

A30

[56 FR 35453, July 26, 1991, as amended at 56 FR 45517, 45520, and 45526, Sept. 6, 1991, 57 FR 1393, 1396, Jan. 14, 1992; 58 FR 38206, July 15, 1993; 59 FR 31744, June 20, 1994]

PART 1192—AMERICANS WITH DISABILITIES ACT (ADA) ACCESSIBILITY GUIDELINES FOR TRANSPORTATION VEHICLES

Subpart A—General

Sec.
1192.1 Purpose.
1192.2 Equivalent facilitation.
1192.3 Definitions.
1192.4 Miscellaneous instructions.

Subpart B—Buses, Vans and Systems

1192.21 General.
1192.23 Mobility aid accessibility.
1192.25 Doors, steps and thresholds.
1192.27 Priority seating signs.
1192.29 Interior circulation, handrails and stanchions.
1192.31 Lighting.
1192.33 Fare box.
1192.35 Public information system.
1192.37 Stop request.
1192.39 Destination and route signs.

Subpart C—Rapid Rail Vehicles and Systems

1192.51 General.
1192.53 Doorways.
1192.55 Priority seating signs.
1192.57 Interior circulation, handrails and stanchions.
1192.59 Floor surfaces.
1192.61 Public information system.
1192.63 Between-car barriers.

Subpart D—Light Rail Vehicles and Systems

1192.71 General.
1192.73 Doorways.
1192.75 Priority seating signs.
1192.77 Interior circulation, handrails and stanchions.
1192.79 Floors, steps and thresholds.
1192.81 Lighting.
1192.83 Mobility aid accessibility.
1192.85 Between-car barriers.
1192.87 Public information system.

Subpart E—Commuter Rail Cars and Systems

1192.91 General.
1192.93 Doorways.
1192.95 Mobility aid accessibility.
1192.97 Interior circulation, handrails and stanchions.
1192.99 Floors, steps and thresholds.
1192.101 Lighting.
1192.103 Public information system.
1192.105 Priority seating signs.
1192.107 Restrooms.
1192.109 Between-car barriers.

Subpart F—Intercity Rail Cars and Systems

1192.111 General.
1192.113 Doorways.
1192.115 Interior circulation, handrails and stanchions.
1192.117 Floors, steps and thresholds.
1192.119 Lighting.
1192.121 Public information system.
1192.123 Restrooms.
1192.125 Mobility aid accessibility.
1192.127 Sleeping compartments.

Subpart G—Over-the-Road Buses and Systems

1192.151 General.
1192.153 Doors, steps and thresholds.
1192.155 Interior circulation, handrails and stanchions.
1192.157 Lighting.
1192.159 Mobility aid accessibility. [Reserved]

Subpart H—Other Vehicles and Systems

1192.171 General.
1192.173 Automated guideway transit vehicles and systems.
1192.175 High-speed rail cars, monorails and systems.
1192.177 Ferries, excursion boats and other vessels. [Reserved]
1192.179 Trams, similar vehicles and systems.

FIGURES IN PART 1192
APPENDIX TO PART 1192—ADVISORY GUIDANCE

AUTHORITY: Americans With Disabilities Act of 1990, Pub. L. 101–336, 104 Stat. 370 (42 U.S.C. 12204).

SOURCE: 56 FR 45558, Sept. 6, 1991, unless otherwise noted.

Subpart A—General

§1192.1 Purpose.

This part provides minimum guidelines and requirements for accessibility standards to be issued by the Department of Transportation in 49 CFR part 37 for transportation vehicles required to be accessible by the Americans with Disabilities Act (ADA) of 1990 (42 U.S.C. 12101 *et seq*).

§1192.2 Equivalent facilitation.

Departures from particular technical and scoping requirements of these guidelines by use of other designs and technologies are permitted where the alternative designs and technologies used will provide substantially equivalent or greater access to and usability

of the vehicle. Departures are to be considered on a case-by-case basis by the Department of Transportation under the procedure set forth in 49 CFR 37.7.

§ 1192.3 Definitions.

Accessible means, with respect to vehicles covered by this part, compliance with the provisions of this part.

Automated guideway transit (AGT) system means a fixed-guideway transportation system which operates with automated (driverless) individual vehicles or multi-car trains. Service may be on a fixed schedule or in response to a passenger-activated call button. Such systems using small, slow moving vehicles, often operated in airports and amusement parks, are sometimes called *people movers.*

Bus means any of several types of self-propelled vehicles, other than an over-the-road bus, generally rubber tired, intended for use on city streets, highways, and busways, including but not limited to minibuses, forty- and thirty-foot transit buses, articulated buses, double-deck buses, and electric powered trolley buses, used to provide designated or specified public transportation services. Self-propelled, rubber tire vehicles designed to look like antique or vintage trolleys or streetcars are considered buses.

Common wheelchairs and mobility aids means belonging to a class of three or four wheeled devices, usable indoors, designed for and used by persons with mobility impairments which do not exceed 30 inches in width and 48 inches in length, measured 2 inches above the ground, and do not weigh more than 600 pounds when occupied.

Commuter rail car means a rail passenger car obtained by a commuter authority (as defined by 49 CFR 37.3) for use in commuter rail transportation.

Commuter rail transportation means short-haul rail passenger service operating in metropolitan and suburban areas, operated by a commuter authority, whether within or across the geographical boundaries of a state, usually characterized by reduced fare, multiple ride, and commutation tickets and by morning and evening peak period operations. This term does not include light or rapid rail transportation.

Demand responsive system means any system of transporting individuals, including the provision of designated public transportation service by public entities and the provision of transportation service by private entities, including but not limited to specified public transportation service, which is not a fixed route system.

Designated public transportation means transportation provided by a public entity (other than public school transportation) by bus, rail, or other conveyance (other than transportation by aircraft or intercity or commuter rail transportation) that provides the general public with general or special service, including charter service, on a regular and continuing basis.

Fixed route system means a system of transporting individuals (other than by aircraft), including the provision of designated public transportation service by public entities and the provision of transportation service by private entities, including but not limited to specified public transportation service, on which a vehicle is operated along a prescribed route according to a fixed schedule.

High speed rail means an intercity-type rail service which operates primarily on a dedicated guideway or track not used, for the most part, by freight, including, but not limited to, trains on welded rail, magnetically levitated (maglev) vehicles on a special guideway, or other advanced technology vehicles, designed to travel at speeds in excess of those possible on other types of railroads.

Intercity rail passenger car means a rail car intended for use by revenue passengers obtained by the National Railroad Passenger Corporation (Amtrak) for use in intercity rail transportation.

Intercity rail transportation means transportation provided by Amtrak.

Light rail means a streetcar-type vehicle railway operated on city streets, semi-private rights-of-way, or exclusive private rights-of-way. Service may be provided by step-entry vehicles or by level-boarding.

New vehicle means a vehicle which is offered for sale or lease after manufacture without any prior use.

Over-the-road bus means a vehicle characterized by an elevated passenger deck located over a baggage compartment.

Rapid rail means a subway-type transit vehicle railway operated on exclusive private rights-of-way with high-level platform stations. Rapid rail may also operate on elevated or at-grade level track separated from other traffic.

Remanufactured vehicle means a vehicle which has been structurally restored and has had new or rebuilt major components installed to extend its service life.

Specified public transportation means transportation by bus, rail, or any other conveyance (other than aircraft) provided by a private entity to the general public, with general or special service (including charter service) on a regular and continuing basis.

Tram means any of several types of motor vehicles consisting of a tractor unit, with or without passenger accommodations, and one or more passenger trailer units, including but not limited to vehicles providing shuttle service to remote parking areas, between hotels and other public accommodations, and between and within amusement parks and other recreation areas.

Used vehicle means a vehicle with prior use.

§1192.4 Miscellaneous instructions.

(a) *Dimensional conventions.* Dimensions that are not noted as minimum or maximum are absolute.

(b) *Dimensional tolerances.* All dimensions are subject to conventional engineering tolerances for material properties and field conditions, including normal anticipated wear not exceeding accepted industry-wide standards and practices.

(c) *Notes.* The text of these guidelines does not contain notes or footnotes. Additional information, explanations, and advisory materials are located in the appendix.

(d) *General terminology.* The terms used in this part shall have the following meanings:

(1) *Comply with* means meet one or more specification of these guidelines.

(2) *If* or *if * * * then* denotes a specification that applies only when the conditions described are present.

(3) *May* denotes an option or alternative.

(4) *Shall* denotes a mandatory specification or requirement.

(5) *Should* denotes an advisory specification or recommendation and is used only in the appendix to this part.

Subpart B—Buses, Vans and Systems

§1192.21 General.

(a) New, used or remanufactured buses and vans (except over-the-road buses covered by subpart G of this part), to be considered accessible by regulations issued by the Department of Transportation in 49 CFR part 37, shall comply with the applicable provisions of this subpart.

(b) If portions of the vehicle are modified in a way that affects or could affect accessibility, each such portion shall comply, to the extent practicable, with the applicable provisions of this subpart. This provision does not require that inaccessible buses be retrofitted with lifts, ramps or other boarding devices.

§1192.23 Mobility aid accessibility.

(a) *General.* All vehicles covered by this subpart shall provide a level-change mechanism or boarding device (e.g., lift or ramp) complying with paragraph (b) or (c) of this section and sufficient clearances to permit a wheelchair or other mobility aid user to reach a securement location. At least two securement locations and devices, complying with paragraph (d) of this section, shall be provided on vehicles in excess of 22 feet in length; at least one securement location and device, complying with paragraph (d) of this section, shall be provided on vehicles 22 feet in length or less.

(b) *Vehicle lift*—(1) *Design load.* The design load of the lift shall be at least 600 pounds. Working parts, such as cables, pulleys, and shafts, which can be expected to wear, and upon which the lift depends for support of the load, shall have a safety factor of at least six, based on the ultimate strength of the material. Nonworking parts, such

as platform, frame, and attachment hardware which would not be expected to wear, shall have a safety factor of at least three, based on the ultimate strength of the material.

(2) *Controls*—(i) *Requirements.* The controls shall be interlocked with the vehicle brakes, transmission, or door, or shall provide other appropriate mechanisms or systems, to ensure that the vehicle cannot be moved when the lift is not stowed and so the lift cannot be deployed unless the interlocks or systems are engaged. The lift shall deploy to all levels (i.e., ground, curb, and intermediate positions) normally encountered in the operating environment. Where provided, each control for deploying, lowering, raising, and stowing the lift and lowering the roll-off barrier shall be of a momentary contact type requiring continuous manual pressure by the operator and shall not allow improper lift sequencing when the lift platform is occupied. The controls shall allow reversal of the lift operation sequence, such as raising or lowering a platform that is part way down, without allowing an occupied platform to fold or retract into the stowed position.

(ii) *Exception.* Where the lift is designed to deploy with its long dimension parallel to the vehicle axis and which pivots into or out of the vehicle while occupied (i.e., *rotary lift*), the requirements of this paragraph prohibiting the lift from being stowed while occupied shall not apply if the stowed position is within the passenger compartment and the lift is intended to be stowed while occupied.

(3) *Emergency operation.* The lift shall incorporate an emergency method of deploying, lowering to ground level with a lift occupant, and raising and stowing the empty lift if the power to the lift fails. No emergency method, manual or otherwise, shall be capable of being operated in a manner that could be hazardous to the lift occupant or to the operator when operated according to manufacturer's instructions, and shall not permit the platform to be stowed or folded when occupied, unless the lift is a rotary lift and is intended to be stowed while occupied.

(4) *Power or equipment failure.* Platforms stowed in a vertical position, and deployed platforms when occupied, shall have provisions to prevent their deploying, falling, or folding any faster than 12 inches/second or their dropping of an occupant in the event of a single failure of any load carrying component.

(5) *Platform barriers.* The lift platform shall be equipped with barriers to prevent any of the wheels of a wheelchair or mobility aid from rolling off the platform during its operation. A movable barrier or inherent design feature shall prevent a wheelchair or mobility aid from rolling off the edge closest to the vehicle until the platform is in its fully raised position. Each side of the lift platform which extends beyond the vehicle in its raised position shall have a barrier a minimum 1½ inches high. Such barriers shall not interfere with maneuvering into or out of the aisle. The loading-edge barrier (outer barrier) which functions as a loading ramp when the lift is at ground level, shall be sufficient when raised or closed, or a supplementary system shall be provided, to prevent a power wheelchair or mobility aid from riding over or defeating it. The outer barrier of the lift shall automatically raise or close, or a supplementary system shall automatically engage, and remain raised, closed, or engaged at all times that the platform is more than 3 inches above the roadway or sidewalk and the platform is occupied. Alternatively, a barrier or system may be raised, lowered, opened, closed, engaged, or disengaged by the lift operator, provided an interlock or inherent design feature prevents the lift from rising unless the barrier is raised or closed or the supplementary system is engaged.

(6) *Platform surface.* The platform surface shall be free of any protrusions over ¼ inch high and shall be slip resistant. The platform shall have a minimum clear width of 28½ inches at the platform, a minimum clear width of 30 inches measured from 2 inches above the platform surface to 30 inches above the platform, and a minimum clear length of 48 inches measured from 2 inches above the surface of the platform to 30 inches above the surface of the platform. (See Fig. 1)

(7) *Platform gaps.* Any openings between the platform surface and the

raised barriers shall not exceed ⅝ inch in width. When the platform is at vehicle floor height with the inner barrier (if applicable) down or retracted, gaps between the forward lift platform edge and the vehicle floor shall not exceed ½ inch horizontally and ⅝ inch vertically. Platforms on semi-automatic lifts may have a hand hold not exceeding 1½ inches by 4½ inches located between the edge barriers.

(8) *Platform entrance ramp.* The entrance ramp, or loading-edge barrier used as a ramp, shall not exceed a slope of 1:8, measured on level ground, for a maximum rise of 3 inches, and the transition from roadway or sidewalk to ramp may be vertical without edge treatment up to ¼ inch. Thresholds between ¼ inch and ½ inch high shall be beveled with a slope no greater than 1:2.

(9) *Platform deflection.* The lift platform (not including the entrance ramp) shall not deflect more than 3 degrees (exclusive of vehicle roll or pitch) in any direction between its unloaded position and its position when loaded with 600 pounds applied through a 26 inch by 26 inch test pallet at the centroid of the platform.

(10) *Platform movement.* No part of the platform shall move at a rate exceeding 6 inches/second during lowering and lifting an occupant, and shall not exceed 12 inches/second during deploying or stowing. This requirement does not apply to the deployment or stowage cycles of lifts that are manually deployed or stowed. The maximum platform horizontal and vertical acceleration when occupied shall be 0.3g.

(11) *Boarding direction.* The lift shall permit both inboard and outboard facing of wheelchair and mobility aid users.

(12) *Use by standees.* Lifts shall accommodate persons using walkers, crutches, canes or braces or who otherwise have difficulty using steps. The platform may be marked to indicate a preferred standing position.

(13) *Handrails.* Platforms on lifts shall be equipped with handrails on two sides, which move in tandem with the lift, and which shall be graspable and provide support to standees throughout the entire lift operation. Handrails shall have a usable component at least 8 inches long with the lowest portion a minimum 30 inches above the platform and the highest portion a maximum 80 inches above the platform. The handrails shall be capable of withstanding a force of 100 pounds concentrated at any point on the handrail without permanent deformation of the rail or its supporting structure. The handrail shall have a cross-sectional diameter between 1¼ inches and 1½ inches or shall provide an equivalent grasping surface, and have eased edges with corner radii of not less than ⅛ inch. Handrails shall be placed to provide a minimum 1½ inches knuckle clearance from the nearest adjacent surface. Handrails shall not interfere with wheelchair or mobility aid maneuverability when entering or leaving the vehicle.

(c) *Vehicle ramp*—(1) *Design load.* Ramps 30 inches or longer shall support a load of 600 pounds, placed at the centroid of the ramp distributed over an area of 26 inches by 26 inches, with a safety factor of at least 3 based on the ultimate strength of the material. Ramps shorter than 30 inches shall support a load of 300 pounds.

(2) *Ramp surface.* The ramp surface shall be continuous and slip resistant; shall not have protrusions from the surface greater than ¼ inch high; shall have a clear width of 30 inches; and shall accommodate both four-wheel and three-wheel mobility aids.

(3) *Ramp threshold.* The transition from roadway or sidewalk and the transition from vehicle floor to the ramp may be vertical without edge treatment up to ¼ inch. Changes in level between ¼ inch and ½ inch shall be beveled with a slope no greater than 1:2.

(4) *Ramp barriers.* Each side of the ramp shall have barriers at least 2 inches high to prevent mobility aid wheels from slipping off.

(5) *Slope.* Ramps shall have the least slope practicable and shall not exceed 1:4 when deployed to ground level. If the height of the vehicle floor from which the ramp is deployed is 3 inches or less above a 6-inch curb, a maximum slope of 1:4 is permitted; if the height of the vehicle floor from which the ramp is deployed is 6 inches or less, but greater than 3 inches, above a 6-inch

curb, a maximum slope of 1:6 is permitted; if the height of the vehicle floor from which the ramp is deployed is 9 inches or less, but greater than 6 inches, above a 6-inch curb, a maximum slope of 1:8 is permitted; if the height of the vehicle floor from which the ramp is deployed is greater than 9 inches above a 6-inch curb, a slope of 1:12 shall be achieved. Folding or telescoping ramps are permitted provided they meet all structural requirements of this section.

(6) *Attachment.* When in use for boarding or alighting, the ramp shall be firmly attached to the vehicle so that it is not subject to displacement when loading or unloading a heavy power mobility aid and that no gap between vehicle and ramp exceeds ⅝ inch.

(7) *Stowage.* A compartment, securement system, or other appropriate method shall be provided to ensure that stowed ramps, including portable ramps stowed in the passenger area, do not impinge on a passenger's wheelchair or mobility aid or pose any hazard to passengers in the event of a sudden stop or maneuver.

(8) *Handrails.* If provided, handrails shall allow persons with disabilities to grasp them from outside the vehicle while starting to board, and to continue to use them throughout the boarding process, and shall have the top between 30 inches and 38 inches above the ramp surface. The handrails shall be capable of withstanding a force of 100 pounds concentrated at any point on the handrail without permanent deformation of the rail or its supporting structure. The handrail shall have a cross-sectional diameter between 1¼ inches and 1½ inches or shall provide an equivalent grasping surface, and have eased edges with corner radii of not less than ⅛ inch. Handrails shall not interfere with wheelchair or mobility aid maneuverability when entering or leaving the vehicle.

(d) *Securement devices*—(1) *Design load.* Securement systems on vehicles with GVWRs of 30,000 pounds or above, and their attachments to such vehicles, shall restrain a force in the forward longitudinal direction of up to 2,000 pounds per securement leg or clamping mechanism and a minimum of 4,000 pounds for each mobility aid. Securement systems on vehicles with GVWRs of up to 30,000 pounds, and their attachments to such vehicles, shall restrain a force in the forward longitudinal direction of up to 2,500 pounds per securement leg or clamping mechanism and a minimum of 5,000 pounds for each mobility aid.

(2) *Location and size.* The securernent system shall be placed as near to the accessible entrance as practicable and shall have a clear floor area of 30 inches by 48 inches. Such space shall adjoin, and may overlap, an access path. Not more than 6 inches of the required clear floor space may be accommodated for footrests under another seat provided there is a minimum of 9 inches from the floor to the lowest part of the seat overhanging the space. Securement areas may have fold-down seats to accommodate other passengers when a wheelchair or mobility aid is not occupying the area, provided the seats, when folded up, do not obstruct the clear floor space required. (See Fig. 2)

(3) *Mobility aids accommodated.* The securement system shall secure common wheelchairs and mobility aids and shall either be automatic or easily attached by a person familiar with the system and mobility aid and having average dexterity.

(4) *Orientation.* In vehicles in excess of 22 feet in length, at least one securement device or system required by paragraph (a) of this section shall secure the wheelchair or mobility aid facing toward the front of the vehicle. In vehicles 22 feet in length or less, the required securement device may secure the wheelchair or mobility aid either facing toward the front of the vehicle or rearward. Additional securement devices or systems shall secure the wheelchair or mobility aid facing forward or rearward. Where the wheelchair or mobility aid is secured facing the rear of the vehicle, a padded barrier shall be provided. The padded barrier shall extend from a height of 38 inches from the vehicle floor to a height of 56 inches from the vehicle floor with a width of 18 inches, laterally centered immediately in back of the seated individual. Such barriers need not be solid provided equivalent protection is afforded.

(5) *Movement.* When the wheelchair or mobility aid is secured in accordance with manufacturer's instructions, the securement system shall limit the movement of an occupied wheelchair or mobility aid to no more than 2 inches in any direction under normal vehicle operating conditions.

(6) *Stowage.* When not being used for securement, or when the securement area can be used by standees, the securement system shall not interfere with passenger movement, shall not present any hazardous condition, shall be reasonably protected from vandalism, and shall be readily accessed when needed for use.

(7) *Seat belt and shoulder harness.* For each wheelchair or mobility aid securement device provided, a passenger seat belt and shoulder harness, complying with all applicable provisions of 49 CFR part 571, shall also be provided for use by wheelchair or mobility aid users. Such seat belts and shoulder harnesses shall not be used in lieu of a device which secures the wheelchair or mobility aid itself.

§1192.25 Doors, steps and thresholds.

(a) *Slip resistance.* All aisles, steps, floor areas where people walk and floors in securement locations shall have slip-resistant surfaces.

(b) *Contrast.* All step edges, thresholds, and the boarding edge of ramps or lift platforms shall have a band of color(s) running the full width of the step or edge which contrasts from the step tread and riser, or lift or ramp surface, either light-on-dark or dark-on-light.

(c) *Door height.* For vehicles in excess of 22 feet in length, the overhead clearance between the top of the door opening and the raised lift platform, or highest point of a ramp, shall be a minimum of 68 inches. For vehicles of 22 feet in length or less, the overhead clearance between the top of the door opening and the raised lift platform, or highest point of a ramp, shall be a minimum of 56 inches.

§1192.27 Priority seating signs.

(a) Each vehicle shall contain sign(s) which indicate that seats in the front of the vehicle are priority seats for persons with disabilities, and that other passengers should make such seats available to those who wish to use them. At least one set of forward-facing seats shall be so designated.

(b) Each securement location shall have a sign designating it as such.

(c) Characters on signs required by paragraphs (a) and (b) of this section shall have a width-to-height ratio between 3:5 and 1:1 and a stroke width-to-height ratio between 1:5 and 1:10, with a minimum character height (using an upper case ''X'') of ⅝ inch, with ''wide'' spacing (generally, the space between letters shall be 1/16 the height of upper case letters), and shall contrast with the background either light-on-dark or dark-on-light.

§1192.29 Interior cIrculation, handrails and stanchions.

(a) Interior handrails and stanchions shall permit sufficient turning and maneuvering space for wheelchairs and other mobility aids to reach a securement location from the lift or ramp.

(b) Handrails and stanchions shall be provided in the entrance to the vehicle in a configuration which allows persons with disabilities to grasp such assists from outside the vehicle while starting to board, and to continue using such assists throughout the boarding and fare collection process. Handrails shall have a cross-sectional diameter between 1¼ inches and 1½ inches or shall provide an equivalent grasping surface, and have eased edges with corner radii of not less than ⅛ inch. Handrails shall be placed to provide a minimum 1½ inches knuckle clearance from the nearest adjacent surface. Where on-board fare collection devices are used on vehicles in excess of 22 feet in length, a horizontal passenger assist shall be located across the front of the vehicle and shall prevent passengers from sustaining injuries on the fare collection device or windshield in the event of a sudden deceleration. Without restricting the vestibule space, the assist shall provide support for a boarding passenger from the front door through the boarding procedure. Passengers shall be able to lean against the assist for security while paying fares.

(c) For vehicles in excess of 22 feet in length, overhead handrail(s) shall be

provided which shall be continuous except for a gap at the rear doorway.

(d) Handrails and stanchions shall be sufficient to permit safe boarding, onboard circulation, seating and standing assistance, and alighting by persons with disabilities.

(e) For vehicles in excess of 22 feet in length with front-door lifts or ramps, vertical stanchions immediately behind the driver shall either terminate at the lower edge of the aisle-facing seats, if applicable, or be ''dog-legged'' so that the floor attachment does not impede or interfere with wheelchair footrests. If the driver seat platform must be passed by a wheelchair or mobility aid user entering the vehicle, the platform, to the maximum extent practicable, shall not extend into the aisle or vestibule beyond the wheel housing.

(f) For vehicles in excess of 22 feet in length, the minimum interior height along the path from the lift to the securement location shall be 68 inches. For vehicles of 22 feet in length or less, the minimum interior height from lift to securement location shall be 56 inches.

§ 1192.31 Lighting.

(a) Any stepwell or doorway immediately adjacent to the driver shall have, when the door is open, at least 2 foot-candles of illumination measured on the step tread or lift platform.

(b) Other stepwells and doorways, including doorways in which lifts or ramps are installed, shall have, at all times, at least 2 foot-candles of illumination measured on the step tread, or lift or ramp, when deployed at the vehicle floor level.

(c) The vehicle doorways, including doorways in which lifts or ramps are installed, shall have outside light(s) which, when the door is open, provide at least 1 foot-candle of illumination on the street surface for a distance of 3 feet perpendicular to all points on the bottom step tread outer edge. Such light(s) shall be located below window level and shielded to protect the eyes of entering and exiting passengers.

§ 1192.33 Fare box.

Where provided, the farebox shall be located as far forward as practicable and shall not obstruct traffic in the vestibule, especially wheelchairs or mobility aids.

§ 1192.35 Public informatIon system.

(a) Vehicles in excess of 22 feet in length, used in multiple-stop, fixed-route service, shall be equipped with a public address system permitting the driver, or recorded or digitized human speech messages, to announce stops and provide other passenger information within the vehicle.

(b) [Reserved]

§ 1192.37 Stop request.

(a) Where passengers may board or alight at multiple stops at their option, vehicles in excess of 22 feet in length shall provide controls adjacent to the securement location for requesting stops and which alerts the driver that a mobility aid user wishes to disembark. Such a system shall provide auditory and visual indications that the request has been made.

(b) Controls required by paragraph (a) of this section shall be mounted no higher than 48 inches and no lower than 15 inches above the floor, shall be operable with one hand and shall not require tight grasping, pinching, or twisting of the wrist. The force required to activate controls shall be no greater than 5 lbf (22.2 N).

§ 1192.39 Destination and route signs.

(a) Where destination or route information is displayed on the exterior of a vehicle, each vehicle shall have illuminated signs on the front and boarding side of the vehicle.

(b) Characters on signs required by paragraph (a) of this section shall have a width-to-height ratio between 3:5 and 1:1 and a stroke width-to-height ratio between 1:5 and 1:10, with a minimum character height (using an upper case ''X'') of 1 inch for signs on the boarding side and a minimum character height of 2 inches for front ''headsigns'', with ''wide'' spacing (generally, the space between letters shall be 1/16 the height of upper case letters), and shall contrast with the background, either dark-on-light or light-on-dark.

Subpart C—Rapid Rail Vehicles and Systems

§1192.51 General.

(a) New, used and remanufactured rapid rail vehicles, to be considered accessible by regulations issued by the Department of Transportation in 49 CFR part 37, shall comply with this subpart.

(b) If portions of the vehicle are modified in a way that affects or could affect accessibility, each such portion shall comply, to the extent practicable, with the applicable provisions of this subpart. This provision does not require that inaccessible vehicles be retrofitted with lifts, ramps or other boarding devices.

(c) Existing vehicles which are retrofitted to comply with the ''one-car-per-train rule'' of 49 CFR 37.93 shall comply with §§1192.55, 1192.57(b), 1192.59 and shall have, in new and key stations, at least one door complying with §1192.53(a)(1), (b) and (d). Removal of seats is not required. Vehicles previously designed and manufactured in accordance with the accessibility requirements of 49 CFR part 609 or Department of Transportation regulations implementing section 504 of the Rehabilitation Act of 1973 that were in effect before October 7, 1991, and which can be entered and used from stations in which they are to be operated, may be used to satisfy the requirements of 49 CFR 37.93.

§1192.53 Doorways.

(a) *Clear width.* (1) Passenger doorways on vehicle sides shall have clear openings at least 32 inches wide when open.

(2) If doorways connecting adjoining cars in a multi-car train are provided, and if such doorway is connected by an aisle with a minimum clear width of 30 inches to one or more spaces where wheelchair or mobility aid users can be accommodated, then such doorway shall have a minimum clear opening of 30 inches to permit wheelchair and mobility aid users to be evacuated to an adjoining vehicle in an emergency.

(b) *Signage.* The International Symbol of Accessibility shall be displayed on the exterior of accessible vehicles operating on an accessible and rapid rail system unless all vehicles area accessible and are not marked by the access symbol. (See Fig. 6)

(c) *Signals.* Auditory and visual warning signals shall be provided to alert passengers of closing doors.

(d) *Coordination with boarding platform*—(1) *Requirements.* Where new vehicles will operate in new stations, the design of vehicles shall be coordinated with the boarding platform design such that the horizontal gap between each vehicle door at rest and the platform shall be no greater than 3 inches and the height of the vehicle floor shall be within plus or minus ⅝ inch of the platform height under all normal passenger load conditions. Vertical alignment may be accomplished by vehicle air suspension or other suitable means of meeting the requirement.

(2) *Exception.* New vehicles operating in existing stations may have a floor height within plus or minus 1½ inches of the platform height. At key stations, the horizontal gap between at least one door of each such vehicle and the platform shall be no greater than 3 inches.

(3) *Exception.* Retrofitted vehicles shall be coordinated with the platform in new and key stations such that the horizontal gap shall be no greater than 4 inches and the height of the vehicle floor, under 50% passenger load, shall be within plus or minus 2 inches of the platform height.

§1192.55 Priority seating sIgns.

(a) Each vehicle shall contain sign(s) which indicate that certain seats are priority seats for persons with disabilities, and that other passengers should make such seats available to those who wish to use them.

(b) Characters on signs required by paragraph (a) of this section shall have a width-to-height ratio between 3:5 and 1:1 and a stroke width-to-height ratio between 1:5 and 1:10, with a minimum character height (using an upper case ''X'') of ⅝ inch, with ''Wide'' spacing (generally, the space between letters shall be 1/16 the height of upper case letters), and shall contrast with the background, either light-on-dark or dark-on-light.

§ 1192.57 InterIor circulation, handrails and stanchions.

(a) Handrails and stanchions shall be provided to assist safe boarding, onboard circulation, seating and standing assistance, and alighting by persons with disabilities.

(b) Handrails, stanchions, and seats shall allow a route at least 32 inches wide so that at least two wheelchair or mobility aid users can enter the vehicle and position the wheelchairs or mobility aids in areas, each having a minimum clear space of 48 inches by 30 inches, which do not unduly restrict movement of other passengers. Space to accommodate wheelchairs and mobility aids may be provided within the normal area used by standees and designation of specific spaces is not required. Particular attention shall be given to ensuring maximum maneuverability immediately inside doors. Ample vertical stanchions from ceiling to seat-back rails shall be provided. Vertical stanchions from ceiling to floor shall not interfere with wheelchair or mobility aid user circulation and shall be kept to a minimum in the vicinity of doors.

(c) The diameter or width of the gripping surface of handrails and stanchions shall be 1¼ inches to 1½ inches or provide an equivalent gripping surface and shall provide a minimum 1½ inches knuckle clearance from the nearest adjacent surface.

§ 1192.59 Floor surfaces.

Floor surfaces on aisles, places for standees, and areas where wheelchair and mobility aid users are to be accommodated shall be slip-resistant.

§ 1192.61 Public information system.

(a)(1) *Requirements.* Each vehicle shall be equipped with a public address system permitting transportation system personnel, or recorded or digitized human speech messages, to announce stations and provide other passenger information. Alternative systems or devices which provide equivalent access are also permitted. Each vehicle operating in stations having more than one line or route shall have an external public address system to permit transportation system personnel, or recorded or digitized human speech messages, to announce train, route, or line identification information.

(2) *Exception.* Where station announcement systems provide information on arriving trains, an external train speaker is not required.

(b) [Reserved]

§ 1192.63 Between-car barriers.

(a) *Requirement.* Suitable devices or systems shall be provided to prevent, deter or warn individuals from inadvertently stepping off the platform between cars. Acceptable solutions include, but are not limited to, pantograph gates, chains, motion detectors or similar devices.

(b) *Exception.* Between-car barriers are not required where platform screens are provided which close off the platform edge and open only when trains are correctly aligned with the doors.

Subpart D—Light Rail Vehicles and Systems

§ 1192.71 General.

(a) New, used and remanufactured light rail vehicles, to be considered accessible by regulations issued by the Department of Transportation in 49 CFR part 37, shall comply with this subpart.

(b)(1) Vehicles intended to be operated solely in light rail systems confined entirely to a dedicated right-of-way, and for which all stations or stops are designed and constructed for revenue service after the effective date of standards for design and construction issued pursuant to subpart C of 49 CFR part 37, shall provide level boarding and shall comply with §§ 1192.73(d)(1) and 1192.85.

(2) Vehicles designed for, and operated on, pedestrian malls, city streets, or other areas where level boarding is not practicable shall provide wayside or car-borne lifts, mini-high platforms, or other means of access in compliance with § 1192.83 (b) or (c).

(c) If portions of the vehicle are modified in a way that affects or could affect accessibility, each such portion shall comply, to the extent practicable, with the applicable provisions of this

subpart. This provision does not require that inaccessible vehicles be retrofitted with lifts, ramps or other boarding devices.

(d) Existing vehicles retrofitted to comply with the ''one-car-per-train rule'' at 49 CFR 37.93 shall comply with §§1192.75, 1192.77(c), 1192.79(a) and 1192.83(a) and shall have, in new and key stations, at least one door which complies with §1192.73 (a)(1), (b) and (d). Vehicles previously designed and manufactured in accordance with the accessibility requirements of 49 CFR part 609 or Department of Transportation regulations implementing section 504 of the Rehabilitation Act of 1973 that were in effect before October 7, 1991, and which can be entered and used from stations in which they are to be operated, may be used to satisfy the requirements of 49 CFR 37.93.

§1192.73 Doorways.

(a) *Clear width.* (1) All passenger doorways on vehicle sides shall have minimum clear openings of 32 inches when open.

(2) If doorways connecting adjoining cars in a multi-car train are provided, and if such doorway is connected by an aisle with a minimum clear width of 30 inches to one or more spaces where wheelchair or mobility aid users can be accommodated, then such doorway shall have a minimum clear opening of 30 inches to permit wheelchair and mobility aid users to be evacuated to an adjoining vehicle in an emergency.

(b) *Signage.* The International Symbol of Accessibility shall be displayed on the exterior of each vehicle operating on an accessible light rail system unless all vehicles are accessible and are not marked by the access symbol (See Fig. 6).

(c) *Signals.* Auditory and visual warning signals shall be provided to alert passengers of closing doors.

(d) *Coordination with boarding platform*—(1) *Requirements.* The design of level-entry vehicles shall be coordinated with the boarding platform or mini-high platform design so that the horizontal gap between a vehicle at rest and the platform shall be no greater than 3 inches and the height of the vehicle floor shall be within plus or minus ⅝ inch of the platform height. Vertical alignment may be accomplished by vehicle air suspension, automatic ramps or lifts, or any combination.

(2) *Exception.* New vehicles operating in existing stations may have a floor height within plus or minus 1½ inches of the platform height. At key stations, the horizontal gap between at least one door of each such vehicle and the platform shall be no greater than 3 inches.

(3) *Exception.* Retrofitted vehicles shall be coordinated with the platform in new and key stations such that the horizontal gap shall be no greater than 4 inches and the height of the vehicle floor, under 50% passenger load, shall be within plus or minus 2 inches of the platform height.

(4) *Exception.* Where it is not operationally or structurally practicable to meet the horizontal or vertical requirements of paragraphs (d) (1), (2) or (3) of this section, platform or vehicle devices complying with §1192.83(b) or platform or vehicle mounted ramps or bridge plates complying with §1192.83(c) shall be provided.

§1192.75 Priority seating signs.

(a) Each vehicle shall contain sign(s) which indicate that certain seats are priority seats for persons with disabilities, and that other passengers should make such seats available to those who wish to use them.

(b) Where designated wheelchair or mobility aid seating locations are provided, signs shall indicate the location and advise other passengers of the need to permit wheelchair and mobility aid users to occupy them.

(c) Characters on signs required by paragraph (a) or (b) of this section shall have a width-to-height ratio between 3:5 and 1:1 and a stroke width-to-height ratio between 1:5 and 1:10, with a minimum character height (using an upper case ''X'') of ⅝ inch, with ''wide'' spacing (generally, the space between letters shall be 1/16 the height of upper case letters), and shall contrast with the background, either light-on-dark or dark-on-light.

§ 1192.77 Interior circulation, handrails and stanchions.

(a) Handrails and stanchions shall be sufficient to permit safe boarding, on-board circulation, seating and standing assistance, and alighting by persons with disabilities.

(b) At entrances equipped with steps, handrails and stanchions shall be provided in the entrance to the vehicle in a configuration which allows passengers to grasp such assists from outside the vehicle while starting to board, and to continue using such handrails or stanchions throughout the boarding process. Handrails shall have a cross-sectional diameter between 1¼ inches and 1½ inches or shall provide an equivalent grasping surface, and have eased edges with corner radii of not less than ⅛ inch. Handrails shall be placed to provide a minimum 1½ inches knuckle clearance from the nearest adjacent surface. Where on-board fare collection devices are used, a horizontal passenger assist shall be located between boarding passengers and the fare collection device and shall prevent passengers from sustaining injuries on the fare collection device or windshield in the event of a sudden deceleration. Without restricting the vestibule space, the assist shall provide support for a boarding passenger from the door through the boarding procedure. Passengers shall be able to lean against the assist for security while paying fares.

(c) At all doors on level-entry vehicles, and at each entrance accessible by lift, ramp, bridge plate or other suitable means, handrails, stanchions, passenger seats, vehicle driver seat platforms, and fare boxes, if applicable, shall be located so as to allow a route at least 32 inches wide so that at least two wheelchair or mobility aid users can enter the vehicle and position the wheelchairs or mobility aids in areas, each having a minimum clear space of 48 inches by 30 inches, which do not unduly restrict movement of other passengers. Space to accommodate wheelchairs and mobility aids may be provided within the normal area used by standees and designation of specific spaces is not required. Particular attention shall be given to ensuring maximum maneuverability immediately inside doors. Ample vertical stanchions from ceiling to seat-back rails shall be provided. Vertical stanchions from ceiling to floor shall not interfere with wheelchair or mobility aid circulation and shall be kept to a minimum in the vicinity of accessible doors.

§ 1192.79 Floors, steps and thresholds.

(a) Floor surfaces on aisles, step treads, places for standees, and areas where wheelchair and mobility aid users are to be accommodated shall be slip-resistant.

(b) All thresholds and step edges shall have a band of color(s) running the full width of the step or threshold which contrasts from the step tread and riser or adjacent floor, either light-on-dark or dark-on-light.

§ 1192.81 Lighting.

(a) Any stepwell or doorway with a lift, ramp or bridge plate immediately adjacent to the driver shall have, when the door is open, at least 2 footcandles of illumination measured on the step tread or lift platform.

(b) Other stepwells, and doorways with lifts, ramps or bridge plates, shall have, at all times, at least 2 footcandles of illumination measured on the step tread or lift or ramp, when deployed at the vehicle floor level.

(c) The doorways of vehicles not operating at lighted station platforms shall have outside lights which provide at least 1 footcandle of illumination on the station platform or street surface for a distance of 3 feet perpendicular to all points on the bottom step tread. Such lights shall be located below window level and shielded to protect the eyes of entering and exiting passengers.

§ 1192.83 Mobility aid accessibility.

(a)(1) *General.* All new light rail vehicles, other than level entry vehicles, covered by this subpart shall provide a level-change mechanism or boarding device (e.g., lift, ramp or bridge plate) complying with either paragraph (b) or (c) of this section and sufficient clearances to permit at least two wheelchair or mobility aid users to reach areas, each with a minimum clear floor space of 48 inches by 30 inches, which do not unduly restrict passenger flow. Space

to accommodate wheelchairs and mobility aids may be provided within the normal area used by standees and designation of specific spaces is not required.

(2) *Exception.* If lifts, ramps or bridge plates meeting the requirements of this section are provided on station platforms or other stops, or mini-high platforms complying with § 1192.73(d) are provided, at stations or stops required to be accessible by 49 CFR part 37, the vehicle is not required to be equipped with a car-borne device. Where each new vehicle is compatible with a single platform-mounted access system or device, additional systems or devices are not required for each vehicle provided that the single device could be used to provide access to each new vehicle if passengers using wheelchairs or mobility aids could not be accommodated on a single vehicle.

(b) *Vehicle lift*—(1) *Design load.* The design load of the lift shall be at least 600 pounds. Working parts, such as cables, pulleys, and shafts, which can be expected to wear, and upon which the lift depends for support of the load, shall have a safety factor of at least six, based on the ultimate strength of the material. Nonworking parts, such as platform, frame, and attachment hardware which would not be expected to wear, shall have a safety factor of at least three, based on the ultimate strength of the material.

(2) *Controls*—(i) *Requirements.* The controls shall be interlocked with the vehicle brakes, propulsion system, or door, or shall provide other appropriate mechanisms or systems, to ensure that the vehicle cannot be moved when the lift is not stowed and so the lift cannot be deployed unless the interlocks or systems are engaged. The lift shall deploy to all levels (i.e., ground, curb, and intermediate positions) normally encountered in the operating environment. Where provided, each control for deploying, lowering, raising, and stowing the lift and lowering the roll-off barrier shall be of a momentary contact type requiring continuous manual pressure by the operator and shall not allow improper lift sequencing when the lift platform is occupied. The controls shall allow reversal of the lift operation sequence, such as raising or lowering a platform that is part way down, without allowing an occupied platform to fold or retract into the stowed position.

(ii) *Exception.* Where physical or safety constraints prevent the deployment at some stops of a lift having its long dimension perpendicular to the vehicle axis, the transportation entity may specify a lift which is designed to deploy with its long dimension parallel to the vehicle axis and which pivots into or out of the vehicle while occupied (i.e., ''rotary lift''). The requirements of paragraph (b)(2)(i) of this section prohibiting the lift from being stowed while occupied shall not apply to a lift design of this type if the stowed position is within the passenger compartment and the lift is intended to be stowed while occupied.

(iii) *Exception.* The brake or propulsion system interlocks requirement does not apply to a station platform mounted lift provided that a mechanical, electrical or other system operates to ensure that vehicles do not move when the lift is in use.

(3) *Emergency operation.* The lift shall incorporate an emergency method of deploying, lowering to ground level with a lift occupant, and raising and stowing the empty lift if the power to the lift fails. No emergency method, manual or otherwise, shall be capable of being operated in a manner that could be hazardous to the lift occupant or to the operator when operated according to manufacturer's instructions, and shall not permit the platform to be stowed or folded when occupied, unless the lift is a rotary lift intended to be stowed while occupied.

(4) *Power or equipment failure.* Lift platforms stowed in a vertical position, and deployed platforms when occupied, shall have provisions to prevent their deploying, falling, or folding any faster than 12 inches/second or their dropping of an occupant in the event of a single failure of any load carrying component.

(5) *Platform barriers.* The lift platform shall be equipped with barriers to prevent any of the wheels of a wheelchair or mobility aid from rolling off the lift during its operation. A movable barrier or inherent design feature shall prevent a wheelchair or mobility aid from

rolling off the edge closest to the vehicle until the lift is in its fully raised position. Each side of the lift platform which extends beyond the vehicle in its raised position shall have a barrier a minimum 1½ inches high. Such barriers shall not interfere with maneuvering into or out of the aisle. The loading-edge barrier (outer barrier) which functions as a loading ramp when the lift is at ground level, shall be sufficient when raised or closed, or a supplementary system shall be provided, to prevent a power wheelchair or mobility aid from riding over or defeating it. The outer barrier of the lift shall automatically rise or close, or a supplementary system shall automatically engage, and remain raised, closed, or engaged at all times that the lift is more than 3 inches above the station platform or roadway and the lift is occupied. Alternatively, a barrier or system may be raised, lowered, opened, closed, engaged or disengaged by the lift operator provided an interlock or inherent design feature prevents the lift from rising unless the barrier is raised or closed or the supplementary system is engaged.

(6) *Platform surface.* The lift platform surface shall be free of any protrusions over ¼ inch high and shall be slip resistant. The lift platform shall have a minimum clear width of 28½ inches at the platform, a minimum clear width of 30 inches measured from 2 inches above the lift platform surface to 30 inches above the surface, and a minimum clear length of 48 inches measured from 2 inches above the surface of the platform to 30 inches above the surface. (See Fig. 1)

(7) *Platform gaps.* Any openings between the lift platform surface and the raised barriers shall not exceed ⅝ inch wide. When the lift is at vehicle floor height with the inner barrier (if applicable) down or retracted, gaps between the forward lift platform edge and vehicle floor shall not exceed ½ inch horizontally and ⅝ inch vertically. Platforms on semiautomatic lifts may have a hand hold not exceeding 1½ inches by 4½ inches located between the edge barriers.

(8) *Platform entrance ramp.* The entrance ramp, or loading-edge barrier used as a ramp, shall not exceed a slope of 1:8 measured on level ground, for a maximum rise of 3 inches, and the transition from the station platform or roadway to ramp may be vertical without edge treatment up to ¼ inch. Thresholds between ¼ inch and ½ inch high shall be beveled with a slope no greater than 1:2.

(9) *Platform deflection.* The lift platform (not including the entrance ramp) shall not deflect more than 3 degrees (exclusive of vehicle roll) in any direction between its unloaded position and its position when loaded with 600 pounds applied through a 26 inch by 26 inch test pallet at the centroid of the lift platform.

(10) *Platform movement.* No part of the platform shall move at a rate exceeding 6 inches/second during lowering and lifting an occupant, and shall not exceed 12 inches/second during deploying or stowing. This requirement does not apply to the deployment or stowage cycles of lifts that are manually deployed or stowed. The maximum platform horizontal and vertical acceleration when occupied shall be 0.3g.

(11) *Boarding direction.* The lift shall permit both inboard and outboard facing of wheelchairs and mobility aids.

(12) *Use by standees.* Lifts shall accommodate persons using walkers, crutches, canes or braces or who otherwise have difficulty using steps. The lift may be marked to indicate a preferred standing position.

(13) *Handrails.* Platforms on lifts shall be equipped with handrails, on two sides, which move in tandem with the lift which shall be graspable and provide support to standees throughout the entire lift operation. Handrails shall have a usable component at least 8 inches long with the lowest portion a minimum 30 inches above the platform and the highest portion a maximum 38 inches above the platform. The handrails shall be capable of withstanding a force of 100 pounds concentrated at any point on the handrail without permanent deformation of the rail or its supporting structure. Handrails shall have a cross-sectional diameter between 1¼ inches and 1½ inches or shall provide an equivalent grasping surface, and have eased edges with corner radii of not less than ⅛ inch. Handrails shall be placed to provide a minimum 1½ inches

knuckle clearance from the nearest adjacent surface. Handrails shall not interfere with wheelchair or mobility aid maneuverability when entering or leaving the vehicle.

(c) *Vehicle ramp or bridge plate*—(1) *Design load.* Ramps or bridge plates 30 inches or longer shall support a load of 600 pounds, placed at the centroid of the ramp or bridge plate distributed over an area of 26 inches by 26 inches, with a safety factor of at least 3 based on the ultimate strength of the material. Ramps or bridge plates shorter than 30 inches shall support a load of 300 pounds.

(2) *Ramp surface.* The ramp or bridge plate surface shall be continuous and slip resistant, shall not have protrusions from the surface greater than ¼ inch, shall have a clear width of 30 inches, and shall accommodate both four-wheel and three-wheel mobility aids.

(3) *Ramp threshold.* The transition from roadway or station platform and the transition from vehicle floor to the ramp or bridge plate may be vertical without edge treatment up to ¼ inch. Changes in level between ¼ inch and ½ inch shall be beveled with a slope no greater than 1:2.

(4) *Ramp barriers.* Each side of the ramp or bridge plate shall have barriers at least 2 inches high to prevent mobility aid wheels from slipping off.

(5) *Slope.* Ramps or bridge plates shall have the least slope practicable. If the height of the vehicle floor, under 50% passenger load, from which the ramp is deployed is 3 inches or less above the station platform a maximum slope of 1:4 is permitted; if the height of the vehicle floor, under 50% passenger load, from which the ramp is deployed is 6 inches or less, but more than 3 inches, above the station platform a maximum slope of 1:6 is permitted; if the height of the vehicle floor, under 50% passenger load, from which the ramp is deployed is 9 inches or less, but more than 6 inches, above the station platform a maximum slope of 1:8 is permitted; if the height of the vehicle floor, under 50% passenger load, from which the ramp is deployed is greater than 9 inches above the station platform a slope of 1:12 shall be achieved. Folding or telescoping ramps are permitted provided they meet all structural requirements of this section.

(6) *Attachment*—(i) *Requirement.* When in use for boarding or alighting, the ramp or bridge plate shall be attached to the vehicle, or otherwise prevented from moving such that it is not subject to displacement when loading or unloading a heavy power mobility aid and that any gaps between vehicle and ramp or bridge plate, and station platform and ramp or bridge plate, shall not exceed ⅝ inch.

(ii) *Exception.* Ramps or bridge plates which are attached to, and deployed from, station platforms are permitted in lieu of vehicle devices provided they meet the displacement requirements of paragraph (c)(6)(i) of this section.

(7) *Stowage.* A compartment, securement system, or other appropriate method shall be provided to ensure that stowed ramps or bridge plates, including portable ramps or bridge plates stowed in the passenger area, do not impinge on a passenger's wheelchair or mobility aid or pose any hazard to passengers in the event of a sudden stop.

(8) *Handrails.* If provided, handrails shall allow persons with disabilities to grasp them from outside the vehicle while starting to board, and to continue to use them throughout the boarding process, and shall have the top between 30 inches and 38 inches above the ramp surface. The handrails shall be capable of withstanding a force of 100 pounds concentrated at any point on the handrail without permanent deformation of the rail or its supporting structure. The handrail shall have a cross-sectional diameter between 1¼ inches and 1½ inches or shall provide an equivalent grasping surface, and have eased edges with corner radii of not less than ⅛ inch. Handrails shall not interfere with wheelchair or mobility aid maneuverability when entering or leaving the vehicle.

§ 1192.85 Between-car barriers.

Where vehicles operate in a high-platform, level-boarding mode, devices or systems shall be provided to prevent, deter or warn individuals from inadvertently stepping off the platform

between cars. Appropriate devices include, but are not limited to, pantograph gates, chains, motion detectors or other suitable devices.

§ 1192.87 Public information system.

(a) Each vehicle shall be equipped with an interior public address system permitting transportation system personnel, or recorded or digitized human speech messages, to announce stations and provide other passenger information. Alternative systems or devices which provide equivalent access are also permitted.

(b) [Reserved]

Subpart E—Commuter Rail Cars and Systems

§ 1192.91 General.

(a) New, used and remanufactured commuter rail cars, to be considered accessible by regulations issued by the Department of Transportation in 49 CFR part 37, shall comply with this subpart.

(b) If portions of the car are modified in such a way that it affects or could affect accessibility, each such portion shall comply, to the extent practicable, with the applicable provisions of this subpart. This provision does not require that inaccessible cars be retrofitted with lifts, ramps or other boarding devices.

(c)(1) Commuter rail cars shall comply with §§ 1192.93(d) and 1192.109 for level boarding wherever structurally and operationally practicable.

(2) Where level boarding is not structurally or operationally practicable, commuter rail cars shall comply with § 1192.95.

(d) Existing vehicles retrofitted to comply with the ''one-car-per-train rule'' at 49 CFR 37.93 shall comply with §§ 1192.93(e), 1192.95(a) and 1192.107 and shall have, in new and key stations, at least one door on each side from which passengers board which complies with § 1192.93(d). Vehicles previously designed and manufactured in accordance with the program accessibility requirements of section 504 of the Rehabilitation Act of 1973, or implementing regulations issued by the Department of Transportation that were in effect before October 7, 1991, and which can be entered and used from stations in which they are to be operated, may be used to satisfy the requirements of 49 CFR 37.93.

§ 1192.93 Doorways.

(a) *Clear width.* (1) At least one door on each side of the car from which passengers board opening onto station platforms and at least one adjacent doorway into the passenger coach compartment, if provided, shall have a minimum clear opening of 32 inches.

(2) If doorways connecting adjoining cars in a multi-car train are provided, and if such doorway is connected by an aisle with a minimum clear width of 30 inches to one or more spaces where wheelchair or mobility aid users can be accommodated, then such doorway shall have, to the maximum extent practicable in accordance with the regulations issued under the Federal Railroad Safety Act of 1970 (49 CFR parts 229 and 231), a clear opening of 30 inches.

(b) *Passageways.* A route at least 32 inches wide shall be provided from doors required to be accessible by paragraph (a)(1) of this section to seating locations complying with § 1192.95(d). In cars where such doorways require passage through a vestibule, such vestibule shall have a minimum width of 42 inches. (See Fig. 3)

(c) *Signals.* If doors to the platform close automatically or from a remote location, auditory and visual warning signals shall be provided to alert passengers of closing doors.

(d) *Coordination with boarding platform*—(1) *Requirements.* Cars operating in stations with high platforms, or mini-high platforms, shall be coordinated with the boarding platform design such that the horizontal gap between a car at rest and the platform shall be no greater than 3 inches and the height of the car floor shall be within plus or minus ⅝ inch of the platform height. Vertical alignment may be accomplished by car air suspension, platform lifts or other devices, or any combination.

(2) *Exception.* New vehicles operating in existing stations may have a floor height within plus or minus 1½ inches of the platform height. At key stations, the horizontal gap between at

least one accessible door of each such vehicle and the platform shall be no greater than 3 inches.

(3) *Exception*. Where platform setbacks do not allow the horizontal gap or vertical alignment specified in paragraph (d) (1) or (2) of this section, car, platform or portable lifts complying with §1192.95(b), or car or platform ramps or bridge plates, complying with §1192.95(c), shall be provided.

(4) *Exception*. Retrofitted vehicles shall be coordinated with the platform in new and key stations such that the horizontal gap shall be no greater than 4 inches and the height of the vehicle floor, under 50% passenger load, shall be within plus or minus 2 inches of the platform height.

(e) *Signage*. The International Symbol of Accessibility shall be displayed on the exterior of all doors complying with this section unless all cars are accessible and are not marked by the access symbol (See Fig. 6). Appropriate signage shall also indicate which accessible doors are adjacent to an accessible restroom, if applicable.

§1192.95 Mobility aid accessibility.

(a)(1) *General*. All new commuter rail cars, other than level entry cars, covered by this subpart shall provide a level-change mechanism or boarding device (e.g., lift, ramp or bridge plate) complying with either paragraph (b) or (c) of this section; sufficient clearances to permit a wheelchair or mobility aid user to reach a seating location; and at least two wheelchair or mobility aid seating locations complying with paragraph (d) of this section.

(2) *Exception*. If portable or platform lifts, ramps or bridge plates meeting the applicable requirements of this section are provided on station platforms or other stops, or mini-high platforms complying with §1192.93(d) are provided, at stations or stops required to be accessible by 49 CFR part 37, the car is not required to be equipped with a car-borne device. Where each new car is compatible with a single platform-mounted access system or device, additional systems or devices are not required for each car provided that the single device could be used to provide access to each new car if passengers using wheelchairs or mobility aids could not be accommodated on a single car.

(b) *Car Lift*—(1) *Design load*. The design load of the lift shall be at least 600 pounds. Working parts, such as cables, pulleys, and shafts, which can be expected to wear, and upon which the lift depends for support of the load, shall have a safety factor of at least six, based on the ultimate strength of the material. Nonworking parts, such as platform, frame, and attachment hardware which would not be expected to wear, shall have a safety factor of at least three, based on the ultimate strength of the material.

(2) *Controls*—(i) *Requirements*. The controls shall be interlocked with the car brakes, propulsion system, or door, or shall provide other appropriate mechanisms or systems, to ensure that the car cannot be moved when the lift is not stowed and so the lift cannot be deployed unless the interlocks or systems are engaged. The lift shall deploy to all platform levels normally encountered in the operating environment. Where provided, each control for deploying, lowering, raising, and stowing the lift and lowering the roll-off barrier shall be of a momentary contact type requiring continuous manual pressure by the operator and shall not allow improper lift sequencing when the lift platform is occupied. The controls shall allow reversal of the lift operation sequence, such as raising or lowering a platform that is part way down, without allowing an occupied platform to fold or retract into the stowed position.

(ii) *Exception*. Where physical or safety constraints prevent the deployment at some stops of a lift having its long dimension perpendicular to the car axis, the transportation entity may specify a lift which is designed to deploy with its long dimension parallel to the car axis and which pivots into or out of the car while occupied (i.e., ''rotary lift''). The requirements of paragraph (b)(2)(i) of this section prohibiting the lift from being stowed while occupied shall not apply to a lift design of this type if the stowed position is within the passenger compartment and the lift is intended to be stowed while occupied.

(iii) *Exception*. The brake or propulsion system interlock requirement does not apply to a platform mounted or portable lift provided that a mechanical, electrical or other system operates to ensure that cars do not move when the lift is in use.

(3) *Emergency operation*. The lift shall incorporate an emergency method of deploying, lowering to ground or platform level with a lift occupant, and raising and stowing the empty lift if the power to the lift fails. No emergency method, manual or otherwise, shall be capable of being operated in a manner that could be hazardous to the lift occupant or to the operator when operated according to manufacturer's instructions, and shall not permit the platform to be stowed or folded when occupied, unless the lift is a rotary lift intended to be stowed while occupied.

(4) *Power or equipment failure*. Platforms stowed in a vertical position, and deployed platforms when occupied, shall have provisions to prevent their deploying, falling, or folding any faster than 12 inches/second or their dropping of an occupant in the event of a single failure of any load carrying component.

(5) *Platform barriers*. The lift platform shall be equipped with barriers to prevent any of the wheels of a wheelchair or mobility aid from rolling off the lift during its operation. A movable barrier or inherent design feature shall prevent a wheelchair or mobility aid from rolling off the edge closest to the car until the lift is in its fully raised position. Each side of the lift platform which, in its raised position, extends beyond the car shall have a barrier a minimum 1½ inches high. Such barriers shall not interfere with maneuvering into or out of the car. The loading-edge barrier (outer barrier) which functions as a loading ramp when the lift is at ground or station platform level, shall be sufficient when raised or closed, or a supplementary system shall be provided, to prevent a power wheelchair or mobility aid from riding over or defeating it. The outer barrier of the lift shall automatically rise or close, or a supplementary system shall automatically engage, and remain raised, closed, or engaged at all times that the lift platform is more than 3 inches above the station platform and the lift is occupied. Alternatively, a barrier or system may be raised, lowered, opened, closed, engaged or disengaged by the lift operator provided an interlock or inherent design feature prevents the lift from rising unless the barrier is raised or closed or the supplementary system is engaged.

(6) *Platform surface*. The lift platform surface shall be free of any protrusions over ¼ inch high and shall be slip resistant. The lift platform shall have a minimum clear width of 28½ inches at the platform, a minimum clear width of 30 inches measured from 2 inches above the lift platform surface to 30 inches above the surface, and a minimum clear length of 48 inches measured from 2 inches above the surface of the platform to 30 inches above the surface. (See Fig. 1)

(7) *Platform gaps*. Any openings between the lift platform surface and the raised barriers shall not exceed ⅝ inch wide. When the lift is at car floor height with the inner barrier down (if applicable) or retracted, gaps between the forward lift platform edge and car floor shall not exceed ½ inch horizontally and ⅝ inch vertically. Platforms on semi-automatic lifts may have a hand hold not exceeding 1½ inches by 4½ inches located between the edge barriers.

(8) *Platform entrance ramp*. The entrance ramp, or loading-edge barrier used as a ramp, shall not exceed a slope of 1:8, when measured on level ground, for a maximum rise of 3 inches, and the transition from station platform to ramp may be vertical without edge treatment up to ¼ inch. Thresholds between ¼ inch and ½ inch high shall be beveled with a slope no greater than 1:2.

(9) *Platform deflection*. The lift platform (not including the entrance ramp) shall not deflect more than 3 degrees (exclusive of vehicle roll) in any direction between its unloaded position and its position when loaded with 600 pounds applied through a 26 inch by 26 inch test pallet at the centroid of the lift platform.

(10) *Platform movement*. No part of the platform shall move at a rate exceeding 6 inches/second during lowering and

lifting an occupant, and shall not exceed 12 inches/second during deploying or stowing. This requirement does not apply to the deployment or stowage cycles of lifts that are manually deployed or stowed. The maximum platform horizontal and vertical acceleration when occupied shall be 0.3g.

(11) *Boarding direction.* The lift shall permit both inboard and outboard facing of wheelchairs and mobility aids.

(12) *Use by standees.* Lifts shall accommodate persons using walkers, crutches, canes or braces or who otherwise have difficulty using steps. The lift may be marked to indicate a preferred standing position.

(13) *Handrails.* Platforms on lifts shall be equipped with handrails, on two sides, which move in tandem with the lift which shall be graspable and provide support to standees throughout the entire lift operation. Handrails shall have a usable component at least 8 inches long with the lowest portion a minimum 30 inches above the platform and the highest portion a maximum 38 inches above the platform. The handrails shall be capable of withstanding a force of 100 pounds concentrated at any point on the handrail without permanent deformation of the rail or its supporting structure. The handrail shall have a cross-sectional diameter between 1¼ inches and 1½ inches or shall provide an equivalent grasping surface, and have eased edges with corner radii of not less than ⅛ inch. Handrails shall be placed to provide a minimum 1½ inches knuckle clearance from the nearest adjacent surface. Handrails shall not interfere with wheelchair or mobility aid maneuverability when entering or leaving the car.

(c) *Car ramp or bridge plate*—(1) *Design load.* Ramps or bridge plates 30 inches or longer shall support a load of 600 pounds, placed at the centroid of the ramp or bridge plate distributed over an area of 26 inches by 26 inches, with a safety factor of at least 3 based on the ultimate strength of the material. Ramps or bridge plates shorter than 30 inches shall support a load of 300 pounds.

(2) *Ramp surface.* The ramp or bridge plate surface shall be continuous and slip resistant, shall not have protrusions from the surface greater than ¼ inch high, shall have a clear width of 30 inches and shall accommodate both four-wheel and three-wheel mobility aids.

(3) *Ramp threshold.* The transition from station platform to the ramp or bridge plate and the transition from car floor to the ramp or bridge plate may be vertical without edge treatment up to ¼ inch. Changes in level between ¼ inch and ½ inch shall be beveled with a slope no greater than 1:2.

(4) *Ramp barriers.* Each side of the ramp or bridge plate shall have barriers at least 2 inches high to prevent mobility aid wheels from slipping off.

(5) *Slope.* Ramps or bridge plates shall have the least slope practicable. If the height of the vehicle floor, under 50% passenger load, from which the ramp is deployed is 3 inches or less above the station platform a maximum slope of 1:4 is permitted; if the height of the vehicle floor, under 50% passenger load, from which the ramp is deployed is 6 inches or less, but more than 3 inches, above the station platform a maximum slope of 1:6 is permitted; if the height of the vehicle floor, under 50% passenger load, from which the ramp is deployed is 9 inches or less, but more than 6 inches, above the station platform a maximum slope of 1:8 is permitted; if the height of the vehicle floor, under 50% passenger load, from which the ramp is deployed is greater than 9 inches above the station platform a slope of 1:12 shall be achieved. Folding or telescoping ramps are permitted provided they meet all structural requirements of this section.

(6) *Attachment*—(i) *Requirement.* When in use for boarding or alighting, the ramp or bridge plate shall be attached to the vehicle, or otherwise prevented from moving such that it is not subject to displacement when loading or unloading a heavy power mobility aid and that any gaps between vehicle and ramp or bridge plates, and station platform and ramp or bridge plate, shall not exceed ⅝ inch.

(ii) *Exception.* Ramps or bridge plates which are attached to, and deployed from, station platforms are permitted in lieu of car devices provided they meet the displacement requirements of paragraph (c)(6)(i) of this section.

(7) *Stowage.* A compartment, securement system, or other appropriate method shall be provided to ensure that stowed ramps or bridge plates, including portable ramps or bridge plates stowed in the passenger area, do not impinge on a passenger's wheelchair or mobility aid or pose any hazard to passengers in the event of a sudden stop.

(8) *Handrails.* If provided, handrails shall allow persons with disabilities to grasp them from outside the car while starting to board, and to continue to use them throughout the boarding process, and shall have the top between 30 inches and 38 inches above the ramp surface. The handrails shall be capable of withstanding a force of 100 pounds concentrated at any point on the handrail without permanent deformation of the rail or its supporting structure. The handrail shall have a cross-sectional diameter between 1¼ inches and 1½ inches or shall provide an equivalent grasping surface, and have eased edges with corner radii of not less than ⅛ inch. Handrails shall not interfere with wheelchair or mobility aid maneuverability when entering or leaving the car.

(d) *Mobility aid seating location.* Spaces for persons who wish to remain in their wheelchairs or mobility aids shall have a minimum clear floor space 48 inches by 30 inches. Such spaces shall adjoin, and may overlap, an accessible path. Not more than 6 inches of the required clear floor space may be accommodated for footrests under another seat provided there is a minimum of 9 inches from the floor to the lowest part of the seat overhanging the space. Seating spaces may have fold-down or removable seats to accommodate other passengers when a wheelchair or mobility aid user is not occupying the area, provided the seats, when folded up, do not obstruct the clear floor space required. (See Fig. 2)

§ 1192.97 Interior circulation, handrails and stanchions.

(a) Where provided, handrails or stanchions within the passenger compartment shall be placed to permit sufficient turning and maneuvering space for wheelchairs and other mobility aids to reach a seating location, complying with § 1192.95(d), from an accessible entrance. The diameter or width of the gripping surface of interior handrails and stanchions shall be 1¼ inches to 1½ inches or shall provide an equivalent gripping surface. Handrails shall be placed to provide a minimum 1½ inches knuckle clearance from the nearest adjacent surface.

(b) Where provided, handrails or stanchions shall be sufficient to permit safe boarding, on-board circulation, seating and standing assistance, and alighting by persons with disabilities.

(c) At entrances equipped with steps, handrails or stanchions shall be provided in the entrance to the car in a configuration which allows passengers to grasp such assists from outside the car while starting to board, and to continue using such assists throughout the boarding process, to the extent permitted by 49 CFR part 231.

§ 1192.99 Floors, steps and thresholds.

(a) Floor surfaces on aisles, step treads, places for standees, and areas where wheelchair and mobility aid users are to be accommodated shall be slip-resistant.

(b) All thresholds and step edges shall have a band of color(s) running the full width of the step or threshold which contrasts from the step tread and riser or adjacent floor, either light-on-dark or dark-on-light.

§ 1192.101 Lighting.

(a) Any stepwell or doorway with a lift, ramp or bridge plate shall have, when the door is open, at least 2 foot-candles of illumination measured on the step tread, ramp, bridge plate, or lift platform.

(b) The doorways of cars not operating at lighted station platforms shall have outside lights which, when the door is open, provide at least 1 foot-candle of illumination on the station platform surface for a distance of 3 feet perpendicular to all points on the bottom step tread edge. Such lights shall be shielded to protect the eyes of entering and exiting passengers.

§ 1192.103 Public information system.

(a) Each car shall be equipped with an interior public address system permitting transportation system personnel, or recorded or digitized human

speech messages, to announce stations and provide other passenger information. Alternative systems or devices which provide equivalent access are also permitted.

(b) [Reserved]

§1192.105 Priority seating signs.

(a) Each car shall contain sign(s) which indicate that certain seats are priority seats for persons with disabilities and that other passengers should make such seats available to those who wish to use them.

(b) Characters on signs required by paragraph (a) shall have a width-to-height ratio between 3:5 and 1:1 and a stroke width-to-height ratio between 1:5 and 1:10, with a minimum character height (using an upper case ''X'') of ⅝ inch, with ''wide'' spacing (generally, the space between letters shall be 1/16 the height of upper case letters), and shall contrast with the background either light-on-dark or dark-on-light.

§1192.107 Restrooms.

(a) If a restroom is provided for the general public, it shall be designed so as to allow a person using a wheelchair or mobility aid to enter and use such restroom as specified in paragraphs (a)(1) through (5) of this section.

(1) The minimum clear floor area shall be 35 inches by 60 inches. Permanently installed fixtures may overlap this area a maximum of 6 inches, if the lowest portion of the fixture is a minimum of 9 inches above the floor, and may overlap a maximum of 19 inches, if the lowest portion of the fixture is a minimum of 29 inches above the floor, provided such fixtures do not interfere with access to the water closet. Fold-down or retractable seats or shelves may overlap the clear floor space at a lower height provided they can be easily folded up or moved out of the way.

(2) The height of the water closet shall be 17 inches to 19 inches measured to the top of the toilet seat. Seats shall not be sprung to return to a lifted position.

(3) A grab bar at least 24 inches long shall be mounted behind the water closet, and a horizontal grab bar at least 40 inches long shall be mounted on at least one side wall, with one end not more than 12 inches from the back wall, at a height between 33 inches and 36 inches above the floor.

(4) Faucets and flush controls shall be operable with one hand and shall not require tight grasping, pinching, or twisting of the wrist. The force required to activate controls shall be no greater than 5 lbf (22.2 N). Controls for flush valves shall be mounted no more than 44 inches above the floor.

(5) Doorways on the end of the enclosure, opposite the water closet, shall have a minimum clear opening width of 32 inches. Doorways on the side wall shall have a minimum clear opening width of 39 inches. Door latches and hardware shall be operable with one hand and shall not require tight grasping, pinching, or twisting of the wrist.

(b) Restrooms required to be accessible shall be in close proximity to at least one seating location for persons using mobility aids and shall be connected to such a space by an unobstructed path having a minimum width of 32 inches.

§1192.109 Between-car barriers.

Where vehicles operate in a high-platform, level-boarding mode, and where between-car bellows are not provided, devices or systems shall be provided to prevent, deter or warn individuals from inadvertently stepping off the platform between cars. Appropriate devices include, but are not limited to, pantograph gates, chains, motion detectors or other suitable devices.

Subpart F—Intercity Rail Cars and Systems

§1192.111 General.

(a) New, used and remanufactured intercity rail cars, to be considered accessible by regulations issued by the Department of Transportation in 49 CFR part 37, shall comply with this subpart to the extent required for each type of car as specified below.

(1) Single-level rail passenger coaches and food service cars (other than single-level dining cars) shall comply with §§1192.113 through 1192.123. Compliance with §1192.125 shall be required only to the extent necessary to meet the requirements of paragraph (d) of this section.

(2) Single-level dining and lounge cars shall have at least one connecting doorway complying with § 1192.113(a)(2), connected to a car accessible to persons using wheelchairs or mobility aids, and at least one space complying with § 1192.125(d) (2) and (3), to provide table service to a person who wishes to remain in his or her wheelchair, and space to fold and store a wheelchair for a person who wishes to transfer to an existing seat.

(3) Bi-level dining cars shall comply with §§ 1192.113(a)(2), 1192.115(b), 1192.117(a), and 1192.121.

(4) Bi-level lounge cars shall have doors on the lower level, on each side of the car from which passengers board, complying with § 1192.113, a restroom complying with § 1192.123, and at least one space complying with § 1192.125(d) (2) and (3) to provide table service to a person who wishes to remain in his or her wheelchair and space to fold and store a wheelchair for a person who wishes to transfer to an existing seat.

(5) Restrooms complying with § 1192.123 shall be provided in single-level rail passenger coaches and food service cars adjacent to the accessible seating locations required by paragraph (d) of this section. Accessible restrooms are required in dining and lounge cars only if restrooms are provided for other passengers.

(6) Sleeper cars shall comply with §§ 1192.113 (b) through (d), 1192.115 through 1192.121, and 1192.125, and have at least one compartment which can be entered and used by a person using a wheelchair or mobility aid and complying with § 1192.127.

(b)(1) If physically and operationally practicable, intercity rail cars shall comply with § 1192.113(d) for level boarding.

(2) Where level boarding is not structurally or operationally practicable, intercity rail cars shall comply with § 1192.125.

(c) If portions of the car are modified in a way that affects or could affect accessibility, each such portion shall comply, to the extent practicable, with the applicable provisions of this subpart. This provision does not require that inaccessible cars be retrofitted with lifts, ramps or other boarding devices.

(d) Passenger coaches or food service cars shall have the number of spaces complying with § 1192.125(d)(2) and the number of spaces complying with § 1192.125(d)(3), as required by 49 CFR 37.91.

(e) Existing cars retrofitted to meet the seating requirements of 49 CFR 37.91 shall comply with §§ 1192.113(e), 1192.123, 1192.125(d) and shall have at least one door on each side from which passengers board complying with § 1192.113(d). Existing cars designed and manufactured to be accessible in accordance with Department of Transportation regulations implementing section 504 of the Rehabilitation Act of 1973 that were in effect before October 7,1991, shall comply with § 1192.125(a).

§ 1192.113 Doorways.

(a) *Clear width.* (1) At least one doorway, on each side of the car from which passengers board, of each car required to be accessible by § 1192.111(a) and where the spaces required by § 1192.111(d) are located, and at least one adjacent doorway into coach passenger compartments shall have a minimum clear opening width of 32 inches.

(2) Doorways at ends of cars connecting two adjacent cars, to the maximum extent practicable in accordance with regulations issued under the Federal Railroad Safety Act of 1970 (49 CFR parts 229 and 231), shall have a clear opening width of 32 inches to permit wheelchair and mobility aid users to enter into a single-level dining car, if available.

(b) *Passaway.* Doorways required to be accessible by paragraph (a) of this section shall permit access by persons using mobility aids and shall have an unobstructed passageway at least 32 inches wide leading to an accessible sleeping compartment complying with § 1192.127 or seating locations complying with § 1192.125(d). In cars where such doorways require passage through a vestibule, such vestibule shall have a minimum width of 42 inches. (see Fig. 4)

(c) *Signals.* If doors to the platform close automatically or from a remote location, auditory and visual warning signals shall be provided to alert passengers of closing doors.

(d) *Coordination with boarding platforms*—(1) *Requirements.* Cars which provide level-boarding in stations with high platforms shall be coordinated with the boarding platform or mini-high platform design such that the horizontal gap between a car at rest and the platform shall be no greater than 3 inches and the height of the car floor shall be within plus or minus ⅝ inch of the platform height. Vertical alignment may be accomplished by car air suspension, platform lifts or other devices, or any combination.

(2) *Exception.* New cars operating in existing stations may have a floor height within plus or minus 1½ inches of the platform height.

(3) *Exception.* Where platform setbacks do not allow the horizontal gap or vertical alignment specified in paragraph (d) (1) or (2) of this section, platform or portable lifts complying with §1192.125(b), or car or platform bridge plates, complying with §1192.125(c), may be provided.

(4) *Exception.* Retrofitted vehicles shall be coordinated with the platform in existing stations such that the horizontal gap shall be no greater than 4 inches and the height of the vehicle floor, under 50% passenger load, shall be within plus or minus 2 inches of the platform height.

(e) *Signage.* The International Symbol of Accessibility shall be displayed on the exterior of all doors complying with this section unless all cars and doors are accessible and are not marked by the access symbol (see Fig. 6). Appropriate signage shall also indicate which accessible doors are adjacent to an accessible restroom, if applicable.

§1192.115 Interior circulation, handrails and stanchions.

(a) Where provided, handrails or stanchions within the passenger compartment shall be placed to permit sufficient turning and maneuvering space for wheelchairs and other mobility aids to reach a seating location, complying with §1192.125(d), from an accessible entrance. The diameter or width of the gripping surface of interior handrails and stanchions shall be 1¼ inches to 1½ inches or shall provide an equivalent gripping surface. Handrails shall be placed to provide a minimum 1½ inches knuckle clearance from the nearest adjacent surface.

(b) Where provided, handrails and stanchions shall be sufficient to permit safe boarding, on-board circulation, seating and standing assistance, and alighting by persons with disabilities.

(c) At entrances equipped with steps, handrails or stanchions shall be provided in the entrance to the car in a configuration which allows passengers to grasp such assists from outside the car while starting to board, and to continue using such assists throughout the boarding process, to the extent permitted by 49 CFR part 231.

§1192.117 Floors, steps and thresholds.

(a) Floor surfaces on aisles, step treads and areas where wheelchair and mobility aid users are to be accommodated shall be slip-resistant.

(b) All step edges and thresholds shall have a band of color(s) running the full width of the step or threshold which contrasts from the step tread and riser or adjacent floor, either light-on-dark or dark-on-light.

§1192.119 Lighting.

(a) Any stepwell, or doorway with a lift, ramp or bridge plate, shall have, when the door is open, at least 2 foot-candles of illumination measured on the step tread, ramp, bridge plate or lift platform.

(b) The doorways of cars not operating at lighted station platforms shall have outside lights which, when the door is open, provide at least 1 foot-candle of illumination on the station platform surface for a distance of 3 feet perpendicular to all points on the bottom step tread edge. Such lights shall be shielded to protect the eyes of entering and exiting passengers.

§1192.121 Public information system.

(a) Each car shall be equipped with a public address system permitting transportation system personnel, or recorded or digitized human speech messages, to announce stations and provide other passenger information. Alternative systems or devices which provide equivalent access are also permitted.

(b) [Reserved]

§ 1192.123 Restrooms.

(a) If a restroom is provided for the general public, and an accessible restroom is required by § 1192.111 (a) and (e), it shall be designed so as to allow a person using a wheelchair or mobility aid to enter and use such restroom as specified in paragraphs (a) (1) through (5) of this section.

(1) The minimum clear floor area shall be 35 inches by 60 inches. Permanently installed fixtures may overlap this area a maximum of 6 inches, if the lowest portion of the fixture is a minimum of 9 inches above the floor, and may overlap a maximum of 19 inches, if the lowest portion of the fixture is a minimum of 29 inches above the floor. Fixtures shall not interfere with access to and use of the water closet. Fold-down or retractable seats or shelves may overlap the clear floor space at a lower height provided they can be easily folded up or moved out of the way.

(2) The height of the water closet shall be 17 inches to 19 inches measured to the top of the toilet seat. Seats shall not be sprung to return to a lifted position.

(3) A grab bar at least 24 inches long shall be mounted behind the water closet, and a horizontal grab bar at least 40 inches long shall be mounted on at least one side wall, with one end not more than 12 inches from the back wall, at a height between 33 inches and 36 inches above the floor.

(4) Faucets and flush controls shall be operable with one hand and shall not require tight grasping, pinching, or twisting of the wrist. The force required to activate controls shall be no greater than 5 lbf (22.2 N). Controls for flush valves shall be mounted no more than 44 inches above the floor.

(5) Doorways on the end of the enclosure, opposite the water closet, shall have a minimum clear opening width of 32 inches. Doorways on the side wall shall have a minimum clear opening width of 39 inches. Door latches and hardware shall be operable with one hand and shall not require tight grasping, pinching, or twisting of the wrist.

(b) Restrooms required to be accessible shall be in close proximity to at least one seating location for persons using mobility aids complying with § 1192.125(d) and shall be connected to such a space by an unobstructed path having a minimum width of 32 inches.

§ 1192.125 Mobility aid accessibility.

(a)(1) *General.* All intercity rail cars, other than level entry cars, required to be accessible by § 1192.111 (a) and (e) of this subpart shall provide a level-change mechanism or boarding device (e.g., lift, ramp or bridge plate) complying with either paragraph (b) or (c) of this section and sufficient clearances to permit a wheelchair or other mobility aid user to reach a seating location complying with paragraph (d) of this section.

(2) *Exception.* If portable or platform lifts, ramps or bridge plates meeting the applicable requirements of this section are provided on station platforms or other stops, or mini-high platforms complying with § 1192.113(d) are provided, at stations or stops required to be accessible by 49 CFR part 37, the car is not required to be equipped with a car-borne device.

(b) *Car Lift*—(1) *Design load.* The design load of the lift shall be at least 600 pounds. Working parts, such as cables, pulleys, and shafts, which can be expected to wear, and upon which the lift depends for support of the load, shall have a safety factor of at least six, based on the ultimate strength of the material. Nonworking parts, such as platform, frame, and attachment hardware which would not be expected to wear, shall have a safety factor of at least three, based on the ultimate strength of the material.

(2) *Controls*—(i) *Requirements.* The controls shall be interlocked with the car brakes, propulsion system, or door, or shall provide other appropriate mechanisms or systems, to ensure that the car cannot be moved when the lift is not stowed and so the lift cannot be deployed unless the interlocks or systems are engaged. The lift shall deploy to all platform levels normally encountered in the operating environment. Where provided, each control for deploying, lowering, raising, and stowing the lift and lowering the roll-off barrier shall be of a momentary contact type requiring continuous manual pressure by the operator and shall not allow improper lift sequencing when

the lift platform is occupied. The controls shall allow reversal of the lift operation sequence, such as raising or lowering a platform that is part way down, without allowing an occupied platform to fold or retract into the stowed position.

(ii) *Exception.* Where physical or safety constraints prevent the deployment at some stops of a lift having its long dimension perpendicular to the car axis, the transportation entity may specify a lift which is designed to deploy with its long dimension parallel to the car axis and which pivots into or out of the car while occupied (i.e., ''rotary lift''). The requirements of paragraph (b)(2)(i) of this section prohibiting the lift from being stowed while occupied shall not apply to a lift design of this type if the stowed position is within the passenger compartment and the lift is intended to be stowed while occupied.

(iii) *Exception.* The brake or propulsion system interlocks requirement does not apply to platform mounted or portable lifts provided that a mechanical, electrical or other system operates to ensure that cars do not move when the lift is in use.

(3) *Emergency operation.* The lift shall incorporate an emergency method of deploying, lowering to ground or station platform level with a lift occupant, and raising and stowing the empty lift if the power to the lift fails. No emergency method, manual or otherwise, shall be capable of being operated in a manner that could be hazardous to the lift occupant or to the operator when operated according to manufacturer's instructions, and shall not permit the platform to be stowed or folded when occupied, unless the lift is a rotary lift and is intended to be stowed while occupied.

(4) *Power or equipment failure.* Platforms stowed in a vertical position, and deployed platforms when occupied, shall have provisions to prevent their deploying, failing, or folding any faster than 12 inches/second or their dropping of an occupant in the event of a single failure of any load carrying component.

(5) *Platform barriers.* The lift platform shall be equipped with barriers to prevent any of the wheels of a wheelchair or mobility aid from rolling off the lift during its operation. A movable barrier or inherent design feature shall prevent a wheelchair or mobility aid from rolling off the edge closest to the car until the lift is in its fully raised position. Each side of the lift platform which, in its raised position, extends beyond the car shall have a barrier a minimum 1½ inches high. Such barriers shall not interfere with maneuvering into or out of the car. The loading-edge barrier (outer barrier) which functions as a loading ramp when the lift is at ground or station platform level, shall be sufficient when raised or closed, or a supplementary system shall be provided, to prevent a power wheelchair or mobility aid from riding over or defeating it. The outer barrier of the lift shall automatically rise or close, or a supplementary system shall automatically engage, and remain raised, closed, or engaged at all times that the lift platform is more than 3 inches above the station platform and the lift is occupied. Alternatively, a barrier or system may be raised, lowered, opened, closed, engaged or disengaged by the lift operator provided an interlock or inherent design feature prevents the lift from rising unless the barrier is raised or closed or the supplementary system is engaged.

(6) *Platform surface.* The lift platform surface shall be free of any protrusions over ¼ inch high and shall be slip resistant. The lift platform shall have a minimum clear width of 28½ inches at the platform, a minimum clear width of 30 inches measured from 2 inches above the lift platform surface to 30 inches above the surface, and a minimum clear length of 48 inches measured from 2 inches above the surface of the platform to 30 inches above the surface. (See Fig. 1.)

(7) *Platform gaps.* Any openings between the lift platform surface and the raised barriers shall not exceed ⅝ inch wide. When the lift is at car floor height with the inner barrier (if applicable) down or retracted, gaps between the forward lift platform edge and car floor shall not exceed ½ inch horizontally and ⅝ inch vertically. Platforms on semi-automatic lifts may have a hand hold not exceeding 1½

inches by 4½ inches located between the edge barriers.

(8) *Platform entrance ramp.* The entrance ramp, or loading-edge barrier used as a ramp, shall not exceed a slope of 1:8, when measured on level ground, for a maximum rise of 3 inches, and the transition from station platform to ramp may be vertical without edge treatment up to ¼ inch. Thresholds between ¼ inch and ½ inch high shall be beveled with a slope no greater than 1:2.

(9) *Platform deflection.* The lift platform (not including the entrance ramp) shall not deflect more than 3 degrees (exclusive of car roll) in any direction between its unloaded position and its position when loaded with 600 pounds applied through a 26 inch by 26 inch test pallet at the centroid of the lift platform.

(10) *Platform movement.* No part of the platform shall move at a rate exceeding 6 inches/second during lowering and lifting an occupant, and shall not exceed 12 inches/second during deploying or stowing. This requirement does not apply to the deployment or stowage cycles of lifts that are manually deployed or stowed. The maximum platform horizontal and vertical acceleration when occupied shall be 0.3g.

(11) *Boarding direction.* The lift shall permit both inboard and outboard facing of wheelchairs and mobility aids.

(12) *Use by standees.* Lifts shall accommodate persons using walkers, crutches, canes or braces or who otherwise have difficulty using steps. The lift may be marked to indicate a preferred standing position.

(13) *Handrails.* Platforms on lifts shall be equipped with handrails, on two sides, which move in tandem with the lift, and which shall be graspable and provide support to standees throughout the entire lift operation. Handrails shall have a usable component at least 8 inches long with the lowest portion a minimum 30 inches above the platform and the highest portion a maximum 38 inches above the platform. The handrails shall be capable of withstanding a force of 100 pounds concentrated at any point on the handrail without permanent deformation of the rail or its supporting structure. The handrail shall have a cross-sectional diameter between 1¼ inches and 1½ inches or shall provide an equivalent grasping surface, and have eased edges with corner radii of not less than ⅛ inch. Handrails shall be placed to provide a minimum 1½ inches knuckle clearance from the nearest adjacent surface. Handrails shall not interfere with wheelchair or mobility aid maneuverability when entering or leaving the car.

(c) *Car ramp or bridge plate*—(1) *Design load.* Ramps or bridge plates 30 inches or longer shall support a load of 600 pounds, placed at the centroid of the ramp or bridge plate distributed over an area of 26 inches by 26 inches, with a safety factor of at least 3 based on the ultimate strength of the material. Ramps or bridge plates shorter than 30 inches shall support a load of 300 pounds.

(2) *Ramp surface.* The ramp or bridge plate surface shall be continuous and slip resistant, shall not have protrusions from the surface greater than ¼ inch high, shall have a clear width of 30 inches and shall accommodate both four-wheel and three-wheel mobility aids.

(3) *Ramp threshold.* The transition from station platform to the ramp or bridge plate and the transition from car floor to the ramp or bridge plate may be vertical without edge treatment up to ¼ inch. Changes in level between ¼ inch and ½ inch shall be beveled with a slope no greater than 1:2.

(4) *Ramp barriers.* Each side of the ramp or bridge plate shall have barriers at least 2 inches high to prevent mobility aid wheels from slipping off.

(5) *Slope.* Ramps or bridge plates shall have the least slope practicable. If the height of the vehicle floor, under 50% passenger load, from which the ramp is deployed is 3 inches or less above the station platform a maximum slope of 1:4 is permitted; if the height of the vehicle floor, under 50% passenger load, from which the ramp is deployed is 6 inches or less, but more than 3 inches, above the station platform a maximum slope of 1:6 is permitted; if the height of the vehicle floor, under 50% passenger load, from which the ramp is deployed is 9 inches or less, but more

than 6 inches, above the station platform a maximum slope of 1:8 is permitted; if the height of the vehicle floor, under 50% passenger load, from which the ramp is deployed is greater than 9 inches above the station platform a slope of 1:12 shall be achieved. Folding or telescoping ramps are permitted provided they meet all structural requirements of this section.

(6) *Attachment*—(i) *Requirement.* When in use for boarding or alighting, the ramp or bridge plate shall be attached to the vehicle, or otherwise prevented from moving such that it is not subject to displacement when loading or unloading a heavy power mobility aid and that any gaps between vehicle and ramp or bridge plate, and station platform and ramp or bridge plate, shall not exceed ⅝ inch.

(ii) *Exception.* Ramps or bridge plates which are attached to, and deployed from, station platforms are permitted in lieu of car devices provided they meet the displacement requirements of paragraph (c)(6)(i) of this section.

(7) *Stowage.* A compartment, securement system, or other appropriate method shall be provided to ensure that stowed ramps or bridge plates, including portable ramps or bridge plates stowed in the passenger area, do not impinge on a passenger's wheelchair or mobility aid or pose any hazard to passengers in the event of a sudden stop.

(8) *Handrails.* If provided, handrails shall allow persons with disabilities to grasp them from outside the car while starting to board, and to continue to use them throughout the boarding process, and shall have the top between 30 inches and 38 inches above the ramp surface. The handrails shall be capable of withstanding a force of 100 pounds concentrated at any point on the handrail without permanent deformation of the rail or its supporting structure. The handrail shall have a cross-sectional diameter between 1¼ inches and 1½ inches or shall provide an equivalent grasping surface, and have eased edges with corner radii of not less than ⅛ inch. Handrails shall not interfere with wheelchair or mobility aid maneuverability when entering or leaving the car.

(d) *Seating*—(1) *Requirements.* All intercity rail cars required to be accessible by §1192.111 (a) and (e) of this subpart shall provide at least one, but not more than two, mobility aid seating location(s) complying with paragraph (d)(2) of this section; and at least one, but not more than two, seating location(s) complying with paragraph (d)(3) of this section which adjoin or overlap an accessible route with a minimum clear width of 32 inches.

(2) *Wheelchair or mobility aid spaces.* Spaces for persons who wish to remain in their wheelchairs or mobility aids shall have a minimum clear floor area 48 inches by 30 inches. Such space may have fold-down or removable seats for use when not occupied by a wheelchair or mobility aid user. (See Fig. 2)

(3) *Other spaces.* Spaces for individuals who wish to transfer shall include a regular coach seat or dining car booth or table seat and space to fold and store the passenger's wheelchair.

§1192.127 Sleeping compartments.

(a) Sleeping compartments required to be accessible shall be designed so as to allow a person using a wheelchair or mobility aid to enter, maneuver within and approach and use each element within such compartment. (See Fig. 5.)

(b) Each accessible compartment shall contain a restroom complying with §1192.123(a) which can be entered directly from such compartment.

(c) Controls and operating mechanisms (e.g., heating and air conditioning controls, lighting controls, call buttons, electrical outlets, etc.) shall be mounted no more than 48 inches, and no less than 15 inches, above the floor and shall have a clear floor area directly in front a minimum of 30 inches by 48 inches. Controls and operating mechanisms shall be operable with one hand and shall not require tight grasping, pinching, or twisting of the wrist.

Subpart G—Over-the-Road Buses and Systems

§1192.151 General.

(a) New, used and remanufactured over-the-road buses, to be considered accessible by regulations issued by the Department of Transportation in 49 CFR part 37, shall comply with this subpart.

(b) Over-the-road buses covered by 49 CFR 37.7(c) shall comply with § 1192.23 and this subpart.

§ 1192.153 Doors, steps and thresholds.

(a) Floor surfaces on aisles, step treads and areas where wheelchair and mobility aid users are to be accommodated shall be slip-resistant.

(b) All step edges shall have a band of color(s) running the full width of the step which contrasts from the step tread and riser, either dark-on-light or light-on-dark.

(c) To the maximum extent practicable, doors shall have a minimum clear width when open of 30 inches, but in no case less than 27 inches.

§ 1192.155 Interior circulation, handrails and stanchions.

(a) Handrails and stanchions shall be provided in the entrance to the vehicle in a configuration which allows passengers to grasp such assists from outside the vehicle while starting to board, and to continue using such handrails or stanchions throughout the boarding process. Handrails shall have a cross-sectional diameter between 1¼ inches and 1½ inches or shall provide an equivalent grasping surface, and have eased edges with corner radii of not less than ⅛ inch. Handrails shall be placed to provide a minimum 1½ inches knuckle clearance from the nearest adjacent surface. Where on-board fare collection devices are used, a horizontal passenger assist shall be located between boarding passengers and the fare collection device and shall prevent passengers from sustaining injuries on the fare collection device or windshield in the event of a sudden deceleration. Without restricting the vestibule space, the assist shall provide support for a boarding passenger from the door through the boarding procedure. Passengers shall be able to lean against the assist for security while paying fares.

(b) Where provided within passenger compartments, handrails or stanchions shall be sufficient to permit safe on-board circulation, seating and standing assistance, and alighting by persons with disabilities.

§ 1192.157 Lighting.

(a) Any stepwell or doorway immediately adjacent to the driver shall have, when the door is open, at least 2 foot-candles of illumination measured on the step tread.

(b) The vehicle doorway shall have outside light(s) which, when the door is open, provide at least 1 foot-candle of illumination on the street surface for a distance of 3 feet perpendicular to all points on the bottom step tread outer edge. Such light(s) shall be located below window level and shielded to protect the eyes of entering and exiting passengers.

§ 1192.159 Mobility aid accessibility. [Reserved]

Subpart H—Other Vehicles and Systems

§ 1192.171 General.

(a) New, used and remanufactured vehicles and conveyances for systems not covered by other subparts of this part, to be considered accessible by regulations issued by the Department of Transportation in 49 CFR part 37, shall comply with this subpart.

(b) If portions of the vehicle or conveyance are modified in a way that affects or could affect accessibility, each such portion shall comply, to the extent practicable, with the applicable provisions of this subpart. This provision does not require that inaccessible vehicles be retrofitted with lifts, ramps or other boarding devices.

(c) Requirements for vehicles and systems not covered by this part shall be determined on a case-by-case basis by the Department of Transportation in consultation with the U.S. Architectural and Transportation Barriers Compliance Board (Access Board).

§ 1192.173 Automated guideway transit vehicles and systems.

(a) Automated Guideway Transit (AGT) vehicles and systems, sometimes called ''people movers'', operated in airports and other areas where AGT vehicles travel at slow speed, shall comply with the provisions of §§ 1192.53 (a) through (c), and 1192.55 through 1192.61 for rapid rail vehicles and systems.

(b) Where the vehicle covered by paragraph (a) of this section will operate in an accessible station, the design of vehicles shall be coordinated with the boarding platform design such that the horizontal gap between a vehicle door at rest and the platform shall be no greater than 1 inch and the height of the vehicle floor shall be within plus or minus ½ inch of the platform height under all normal passenger load conditions. Vertical alignment may be accomplished by vehicle air suspension or other suitable means of meeting the requirement.

(c) In stations where open platforms are not protected by platform screens, a suitable device or system shall be provided to prevent, deter or warn individuals from stepping off the platform between cars. Acceptable devices include, but are not limited to, pantograph gates, chains, motion detectors or other appropriate devices.

(d) Light rail and rapid rail AGT vehicles and systems shall comply with subparts D and C of this part, respectively.

§1192.175 High-speed rail cars, monorails and systems.

(a) All cars for high-speed rail systems, including but not limited to those using ''maglev'' or high speed steel-wheel-on-steel-rail technology, and monorail systems operating primarily on dedicated rail (i.e., not used by freight trains) or guideway, in which stations are constructed in accordance with subpart C of 49 CFR part 37, shall be designed for high-platform, level boarding and shall comply with §1192.111(a) for each type of car which is similar to intercity rail, §§1192.111(d), 1192.113 (a) through (c) and (e), 1192.115 (a) and (b), 1192.117 (a) and (b), 1192.121 through 1192.123, 1192.125(d), and 1192.127 (if applicable). The design of cars shall be coordinated with the boarding platform design such that the horizontal gap between a car door at rest and the platform shall be no greater than 3 inches and the height of the car floor shall be within plus or minus ⅝ inch of the platform height under all normal passenger load conditions. Vertical alignment may be accomplished by car air suspension or other suitable means of meeting the requirement. All doorways shall have, when the door is open, at least 2 footcandles of illumination measured on the door threshold.

(b) All other high-speed rail cars shall comply with the similar provisions of subpart F of this part.

§1192.177 Ferries, excursion boats and other vessels. [Reserved]

§1192.179 Trams, similar vehicles and systems.

(a) New and used trams consisting of a tractor unit, with or without passenger accommodations, and one or more passenger trailer units, including but not limited to vehicles providing shuttle service to remote parking areas, between hotels and other public accommodations, and between and within amusement parks and other recreation areas, shall comply with this section. For purposes of determining applicability of 49 CFR 37.101, 37.103, or 37.105, the capacity of such a vehicle or ''train'' shall consist of the total combined seating capacity of all units, plus the driver, prior to any modification for accessibility.

(b) Each tractor unit which accommodates passengers and each trailer unit shall comply with §§1192.25 and 1192.29. In addition, each such unit shall comply with §1192.23 (b) or (c) and shall provide at least one space for wheelchair or mobility aid users complying with §1192.23(d) unless the complete operating unit consisting of tractor and one or more trailers can already accommodate at least two wheelchair or mobility aid users.

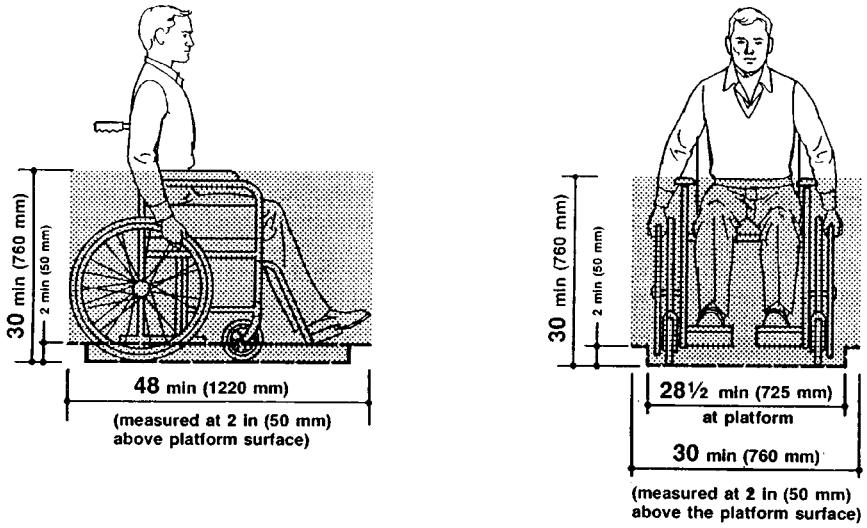

(a)
(side view)

(b)
(front view)

Fig. 1
Wheelchair or Mobility Aid Envelope

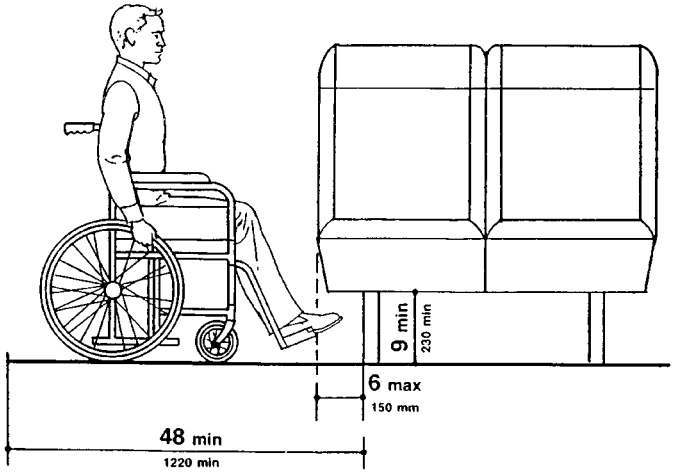

Fig. 2
Toe Clearance Under a Seat

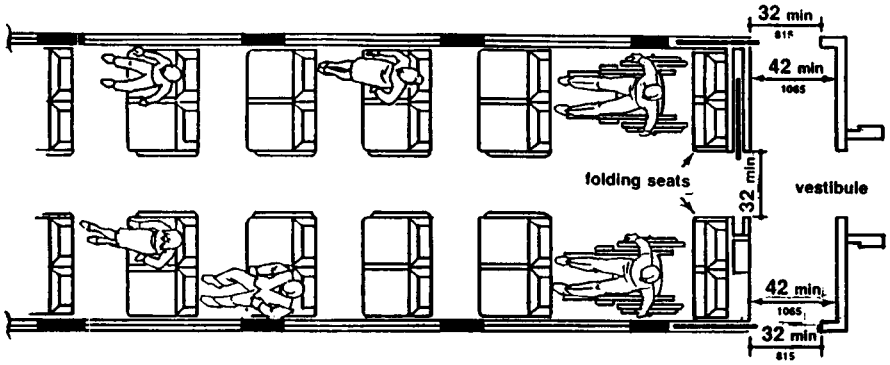

Fig. 3
Commuter Rail Car (without restrooms)

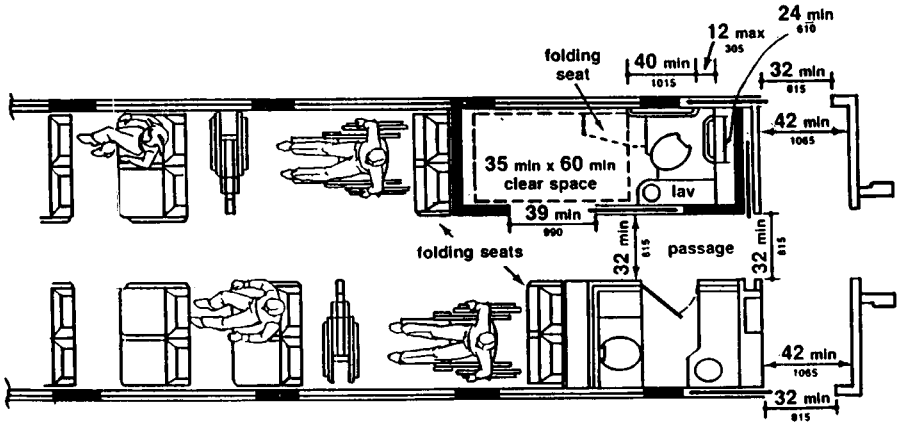

Fig. 4
Intercity Rail Car (with accessible restroom)

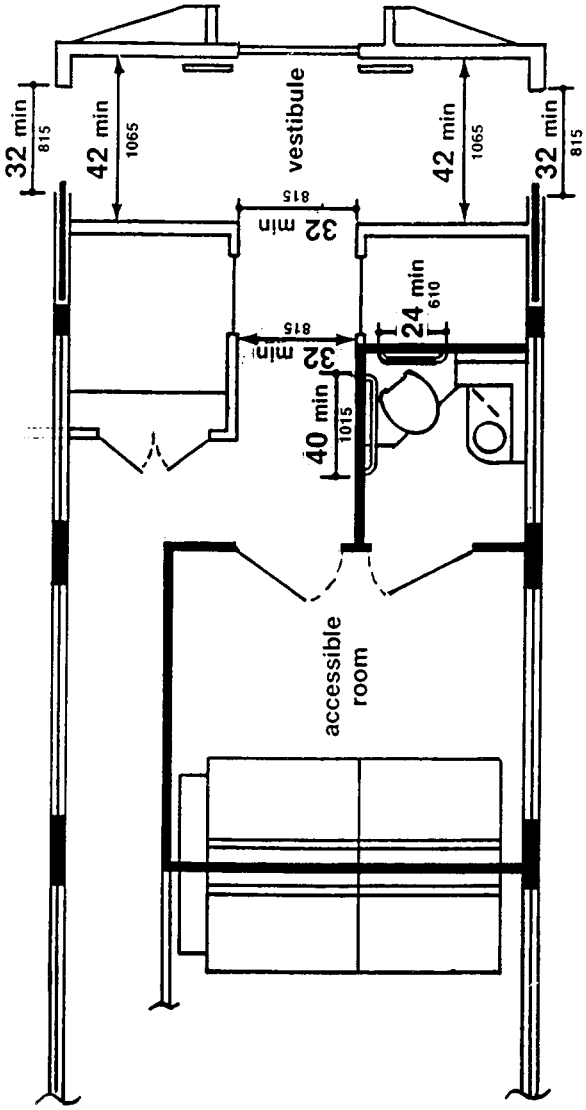

Fig. 5
Intercity Rail Car (with accessible sleeping compartment)

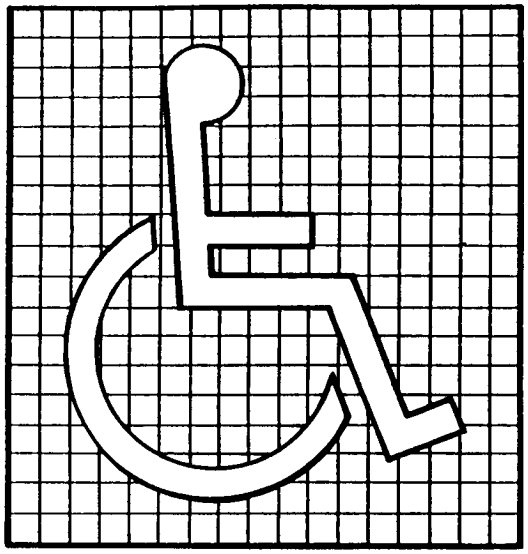

(a)
Proportions

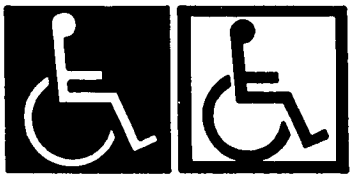

(b)
Display Conditions

Fig. 6
International Symbol of Accessibility

APPENDIX TO PART 1192—ADVISORY GUIDANCE

This appendix contains materials of an advisory nature and provides additional information that should help the reader to understand the minimum requirements of the guidelines or to design vehicles for greater accessibility. Each entry is applicable to all subparts of this part except where noted. Nothing in this appendix shall in any way obviate any obligation to comply with the requirements of the guidelines themselves.

I. SLIP RESISTANT SURFACES—AISLES, STEPS, FLOOR AREAS WHERE PEOPLE WALK, FLOOR AREAS IN SECUREMENT LOCATIONS, LIFT PLATFORMS, RAMPS

Slip resistance is based on the frictional force necessary to keep a shoe heel or crutch tip from slipping on a walking surface under conditions likely to be found on the surface. While the dynamic coefficient of friction during walking varies in a complex and non-uniform way, the static coefficient of friction, which can be measured in several ways, provides a close approximation of the slip resistance of a surface. Contrary to popular belief, some slippage is necessary to walking, especially for persons with restricted gaits; a truly ''non-slip'' surface could not be negotiated.

The Occupational Safety and Health Administration recommends that walking surfaces have a static coefficient of friction of 0.5. A research project sponsored by the Architectural and Transportation Barriers Compliance Board (Access Board) conducted tests with persons with disabilities and concluded that a higher coefficient of friction was needed by such persons. A static coefficient of friction of 0.6 is recommended for steps, floors, and lift platforms and 0.8 for ramps.

The coefficient of friction varies considerably due to the presence of contaminants, water, floor finishes, and other factors not under the control of transit providers and may be difficult to measure. Nevertheless, many common materials suitable for flooring are now labeled with information on the static coefficient of friction. While it may not be possible to compare one product directly with another, or to guarantee a constant measure, transit operators or vehicle designers and manufacturers are encouraged to specify materials with appropriate values. As more products include information on slip resistance, improved uniformity in measurement and specification is likely. The Access Board's advisory guidelines on Slip Resistant Surfaces provides additional information on this subject.

II. COLOR CONTRAST—STEP EDGES, LIFT PLATFORM EDGES

The material used to provide contrast should contrast by at least 70%. Contrast in percent is determined by:

$$\text{Contrast}=[(B_1-B_2)/B_1]\times 100$$

where B_1=light reflectance value (LRV) of the lighter area

and B_2=light reflectance value (LRV) of the darker area.

Note that in any application both white and black are never absolute; thus, B_1 never equals 100 and B_2 is always greater than 0.

III. HANDRAILS AND STANCHIONS

In addition to the requirements for handrails and stanchions for rapid, light, and commuter rail vehicles, consideration should be given to the proximity of handrails or stanchions to the area in which wheelchair or mobility aid users may position themselves. When identifying the clear floor space where a wheelchair or mobility aid user can be accommodated, it is suggested that at least one such area be adjacent or in close proximity to a handrail or stanchion. Of course, such a handrail or stanchion cannot encroach upon the required 32 inch width required for the doorway or the route leading to the clear floor space which must be at least 30 by 48 inches in size.

IV. PRIORITY SEATING SIGNS AND OTHER SIGNAGE

A. Finish and Contrast

The characters and background of signs should be eggshell, matte, or other non-glare finish. An eggshell finish (11 to 19 degree gloss on 60 degree glossimeter) is recommended. Characters and symbols should contrast with their background—either light characters on a dark background or dark characters on a light background. Research indicates that signs are more legible for persons with low vision when characters contrast with their background by at least 70 percent. Contrast in percent is determined by:

$$\text{Contrast}=[(B_1-B_2)/B_1]\times 100$$

where B_1=light reflectance value (LRV) of the lighter area

and B_2=light reflectance value (LRV) of the darker area.

Note that in any application both white and black are never absolute; thus, B_1 never equals 100 and B_2 is always greater than 0.

The greatest readability is usually achieved through the use of light-colored characters or symbols on a dark background.

B. Destination and Route Signs

The following specifications, which are required for buses (§1192.39), are recommended

for other types of vehicles, particularly light rail vehicles, where appropriate.

1.Where destination or route information is displayed on the exterior of a vehicle, each vehicle should have illuminated signs on the front and boarding side of the vehicle.

2. Characters on signs covered by paragraph IV.B.1 of this appendix should have a width-to-height ratio between 3:5 and 1:1 and a stroke width-to-height ratio between 1:5 and 1:10, with a minimum character height (using an upper case ''X'') of 1 inch for signs on the boarding side and a minimum character height of 2 inches for front ''headsigns'', with ''wide'' spacing (generally, the space between letters shall be 1/16 the height of upper case letters), and should contrast with the background, either dark-on-light or light-on-dark, or as recommended above.

C. Designation of Accessible Vehicles

The International Symbol of Accessibility should be displayed as shown in Figure 6.

V. PUBLIC INFORMATION SYSTEMS

There is currently no requirement that vehicles be equipped with an information system which is capable of providing the same or equivalent information to persons with hearing loss. While the Department of Transportation assesses available and soon-to-be available technology during a study to be conducted during Fiscal Year 1992, entities are encouraged to employ whatever services, signage or alternative systems or devices that provide equivalent access and are available. Two possible types of devices are visual display systems and listening systems. However, it should be noted that while visual display systems accommodate persons who are deaf or are hearing impaired, assistive listening systems aid only those with a partial loss of hearing.

A. Visual Display Systems

Announcements may be provided in a visual format by the use of electronic message boards or video monitors.

Electronic message boards using a light emitting diode (LED) or ''flip-dot'' display are currently provided in some transit stations and terminals and may be usable in vehicles. These devices may be used to provide real time or pre-programmed messages; however, real time message displays require the availability of an employee for keyboard entry of the information to be announced.

Video monitor systems, such as visual paging systems provided in some airports (e.g., Baltimore-Washington International Airport), are another alternative. The Architectural and Transportation Barriers Compliance Board (Access Board) can provide technical assistance and information on these systems (''Airport TDD Access: Two Case Studies,'' (1990)).

B. Assistive Listening Systems

Assistive listening systems (ALS) are intended to augment standard public address and audio systems by providing signals which can be received directly by persons with special receivers or their own hearing aids and which eliminate or filter background noise. Magnetic induction loops, infra-red and radio frequency systems are types of listening systems which are appropriate for various applications.

An assistive listening-system appropriate for transit vehicles, where a group of persons or where the specific individuals are not known in advance, may be different from the system appropriate for a particular individual provided as an auxiliary aid or as part of a reasonable accommodation. The appropriate device for an individual is the type that individual can use, whereas the appropriate system for a station or vehicle will necessarily be geared toward the ''average'' or aggregate needs of various individuals. Earphone jacks with variable volume controls can benefit only people who have slight hearing loss and do not help people who use hearing aids. At the present time, magnetic induction loops are the most feasible type of listening system for people who use hearing aids equipped with ''T-coils'', but people without hearing aids or those with hearing aids not equipped with inductive pick-ups cannot use them without special receivers. Radio frequency systems can be extremely effective and inexpensive. People without hearing aids can use them, but people with hearing aids need a special receiver to use them as they are presently designed. If hearing aids had a jack to allow a by-pass of microphones, then radio frequency systems would be suitable for people with and without hearing aids. Some listening systems may be subject to interference from other equipment and feedback from hearing aids of people who are using the systems. Such interference can be controlled by careful engineering design that anticipates feedback sources in the surrounding area.

The Architectural and Transportation Barriers Compliance Board (Access Board) has published a pamphlet on Assistive Listening Systems which lists demonstration centers across the country where technical assistance can be obtained in selecting and installing appropriate systems. The state of New York has also adopted a detailed technical specification which may be useful.

PARTS 1193—1199 [RESERVED]

CHAPTER XII—NATIONAL ARCHIVES AND RECORDS ADMINISTRATION

SUBCHAPTER A—GENERAL RULES

Part		*Page*
1200	Official seals	429
1202	Regulations implementing the Privacy Act of 1974	430
1206	National Historical Publications and Records Commission	441
1207	Uniform administrative requirements for grants and cooperative agreements to state and local governments	449
1208	Enforcement of nondiscrimination on the basis of handicap in programs or activities conducted by the National Archives and Records Administration	476
1209	Governmentwide debarment and suspension (nonprocurement) and governmentwide requirements for drug-free workplace (grants)	482
1210	Uniform administrative requirements for grants and agreements with institutions of higher education, hospitals, and other non–profit organizations	500

SUBCHAPTER B—RECORDS MANAGEMENT

1220	Federal records; general	526
1222	Creation and maintenance of Federal records	532
1228	Disposition of Federal records	538
1230	Micrographic records management	565
1232	Audiovisual records management	572
1234	Electronic records management	576
1236	Management of vital records	583
1238	Program assistance	586

SUBCHAPTER C—PUBLIC AVAILABILITY AND USE

1250	Public availability of NARA administrative records and informational materials	587

Part		Page
1252	Public use of records, donated historical materials, and facilities; general	596
1253	Location of records and hours of use	597
1254	Availability of records and donated historical materials	599
1256	Restrictions on the use of records	619
1258	Fees	624
	SUBCHAPTER D—DECLASSIFICATION	
1260	Declassification of and public access to national security information	630
	SUBCHAPTER E—PRESIDENTIAL RECORDS	
1270	Presidential records	636
	SUBCHAPTER F—NIXON PRESIDENTIAL MATERIALS	
1275	Preservation and protection of and access to the Presidential historical materials of the Nixon Administration	641
	SUBCHAPTER G—NARA FACILITIES	
1280	Public use of facilities	658
1284	Exhibits	665
1285–1299	[Reserved]	

SUBCHAPTER A—GENERAL RULES

PART 1200—OFFICIAL SEALS

Sec.
1200.1 Definitions.
1200.2 Description and design.
1200.4 Authority to affix seals.
1200.6 Use of the seals.

AUTHORITY: 44 U.S.C. 2104(e), 2116(b), 2302.

SOURCE: 50 FR 27196, July 1, 1985, unless otherwise noted.

§ 1200.1 Definitions.

For the purposes of this part—

Embossing seal means a display of the form and content of the official seal made on a die so that the seal can be embossed on paper or other medium.

NARA means all organizational units of the National Archives and Records Administration.

Official seal means the original(s) of the seal showing the exact form, content and color.

Replica or *reproduction* means a copy of the official seal displaying the form, content and color.

§ 1200.2 Description and design.

(a) *National Archives and Records Administration seal.* The design is illustrated below and described as follows:

Centered on a disc with a double-line border a solid line rendition of an heraldic eagle displayed holding in its left talon thirteen arrows, in its right talon a branch of olive, bearing on its breast a representation of the shield of the United States and displayed above its head a partially unrolled scroll inscribed with the words LITTERA SCRIPTA MANET one above the other; all within the circumscription NATIONAL ARCHIVES AND RECORDS ADMINISTRATION, with the date 1985 at bottom center.

(b) *National Archives seal.* The design is illustrated below and described as in paragraph (a) of this section, encircled by the circumscription THE NATIONAL ARCHIVES OF THE UNITED STATES, with the date 1934 at the bottom center.

(c) *National Archives Trust Fund Board seal.* The design is illustrated below and described as in paragraph (a) of

this section, encircled by the circumscription NATIONAL ARCHIVES TRUST FUND BOARD, with the date 1941 at the bottom center.

§ 1200.4 Authority to affix seals.

The Archivist of the United States and the Archivist's designees are authorized to affix the official seals, embossing seals, replicas and reproductions to appropriate documents, certifications and other material for all purposes authorized by this part.

§ 1200.6 Use of the seals.

(a) The seals are the official emblems of NARA and their use is therefore permitted only as provided in this part.

(b) Use by any person or organization outside NARA may be made only with prior written approval by NARA.

(c) Requests by any person or organization outside NARA for permission to use the seals must be made in writing to the Archivist of the United States, National Archives (N), Washington, DC 20408, and must specify, in detail, the exact use to be made. Any permission granted applies only to the specific use for which it was granted and is not to be construed as permission for any other use.

(d) Use of the NARA and the National Archives of the United States seals shall be primarily for informational purposes and for authentication of documents. The National Archives Trust Fund Board seal shall be used only for Trust Fund documents and publications. The seals may not be used on any article or in any manner which may discredit the seals or reflect unfavorably upon NARA or which implies NARA endorsement of commercial products or services, or of the user's policies or activities.

(e) Falsely making, forging, counterfeiting, mutilating, or altering the official seals, replicas, reproductions or embossing seals, or knowingly using or possessing with fraudulent intent any altered seal is punishable under section 506 of title 18, United States Code.

(f) Any person using the official seals, replicas, reproductions, or embossing seals in a manner inconsistent with the provisions of this part is subject to the provisions of 18 U.S.C. 1017, which provides penalties for the wrongful use of an official seal, and to other provisions of law as applicable.

PART 1202—REGULATIONS IMPLEMENTING THE PRIVACY ACT OF 1974

Sec.

1202.1 Scope of part.
1202.2 Purpose.
1202.4 Definitions.

Subpart A—General Policy

1202.10 Collection and use.
1202.12 Standards of accuracy.
1202.14 Rules of conduct.
1202.16 Safeguarding systems of records.
1202.18 Inconsistent issuances of NARA superseded.
1202.20 Records of other agencies.
1202.22 Subpoenas and other legal demands.

Subpart B—Disclosure of Records

1202.30 Conditions of disclosure.
1202.32 Procedures for disclosure.
1202.34 Accounting of disclosures.

Subpart C—Individual Access to Records

1202.40 Forms of request.
1202.42 Special requirements for medical records.
1202.44 Granting access.
1202.46 Denials of access.
1202.48 Appeal of denial of access within NARA.
1202.50 Records available at a fee.
1202.52 Prepayment of fees over $25.
1202.54 Form of payment.

Subpart D—Requests to Amend Records

1202.60 Submission of requests to amend records.
1202.62 Review of requests to amend records.
1202.64 Approval of requests to amend.
1202.66 Denial of requests to amend.
1202.68 Agreement to alternative amendments.
1202.70 Appeal of denial of request to amend a record.
1202.72 Statements of disagreement.
1202.74 Judicial review.

Subpart E—Report on New Systems of Records and Alteration of Existing Systems

1202.80 Reporting requirement.
1202.82 Federal Register notice of establishment of new system or alteration of existing system.
1202.84 Effective date of new system of records or alteration of an existing system of records.

Subpart F—Exemptions

1202.90 Specific exemptions.

Subpart G—Assistance and Referrals

1202.100 Requests for assistance and referrals.

AUTHORITY: 44 U.S.C. 2104(a); 5 U.S.C. 552a.

SOURCE: 50 FR 27197, July 1, 1985, unless otherwise noted.

EDITORIAL NOTE: Nomenclature changes to part 1202 appear at 54 FR 32067, Aug. 4, 1989.

§1202.1 Scope of part.

This part sets forth policies and procedures concerning the collection, use, and dissemination of records maintained by NARA which are subject to the provisions of the Privacy Act of 1974, 5 U.S.C. 552a. These policies and procedures govern only those records as defined in §1202.4. Policies and procedures governing the disclosure and availability of NARA administrative records in general are in part 1250 of this chapter. This part also covers exemptions from disclosure of personal information; procedures for guidance of subject individuals in obtaining information and inspecting and disagreeing with the content of records; accounting for disclosures of information; special requirements for medical records; and fees.

§1202.2 Purpose.

This part implements the provisions of 5 U.S.C. 552a, popularly known as the ''Privacy Act of 1974'' (hereinafter referred to as the Act). This part prescribes procedures for notifying an individual of NARA systems of records which may contain a record pertaining to him or her, procedures for gaining access and contesting the contents of such records, and other procedures for carrying out the provisions of the Act.

§1202.4 Definitions.

For the purposes of this part 1202:

Access means a transfer of a record, a copy of a record, or the information in a record to the subject individual, or the review of a record by the subject individual.

Agency means agency as defined in 5 U.S.C. 552(e).

Disclosure means a transfer of a record, a copy of a record, or the information contained in a record to a recipient other than the subject individual, or the review of a record by someone other than the subject individual.

Individual means a citizen of the United States or an alien lawfully admitted for permanent residence.

Maintain includes maintain, collect, use, and disseminate.

NARA Privacy Act appeal official means the Deputy Archivist of the United States for appeals of denials of access to or amendment of records maintained in a system of records, except where the system manager is the Inspector General or the Archivist of the United States. The term means the Archivist of the United States for appeals of denial of access to or amendment of records in systems of records maintained by the Inspector General.

Record means any item, collection, or grouping of information about an individual that is maintained by an agency, including, but not limited to, his or her education, financial transactions, medical history and criminal or employment history and that contains his or her name or an identifying number, symbol, or other identifying particular assigned to the individual, such as a fingerprint, voiceprint, or photograph.

Routine use means, with respect to the disclosure of a record, the use of

that record for a purpose which is compatible with the purpose for which it was collected.

Solicitation means a request by a NARA officer or employee that an individual provide information about himself or herself.

Statistical record means a record in a system of records maintained for statistical research or reporting purposes only and not used in whole or in part in making any determination about an identifiable individual, except as provided by 13 U.S.C. 8.

Subject individual means the individual named or discussed in a record or the individual to whom a record otherwise pertains.

System manager means the NARA employee who is responsible for the maintenance of a system of records and for the collection, use, and dissemination of information therein.

System of records means a group of any records under the control of an agency from which information is retrieved by the name of the individual or by some identifying number, symbol, or other identifier assigned to that individual.

[50 FR 27197, July 1, 1985, as amended at 54 FR 32067, Aug. 4, 1989]

Subpart A—General Policy

§ 1202.10 Collection and use.

(a) *General.* Any information used in whole or in part in making a determination about an individual's rights, benefits, or privileges under NARA programs will be collected directly from the subject individual to the extent practicable. The system manager also shall ensure that information collected is used only in conformance with the provisions of the Act and these regulations.

(b) *Solicitation of information.* System managers shall ensure that at the time information is solicited the solicited individual is informed of the authority for collecting that information, whether providing the information is mandatory or voluntary, the purposes for which the information will be used, the routine uses of the information, and the effects on the individual, if any, of not providing the information. The Assistant Archivist for Management and Administration shall ensure that forms used to solicit information are in compliance with the Act and these regulations.

(c) *Solicitation of social security number.* Before a NARA employee requests an individual to disclose his or her social security number, the officer or employee shall ensure that either:

(1) The disclosure is required by Federal law, or;

(2) The disclosure was required under a Federal law or regulation adopted before January 1, 1975, to verify the identity of an individual, and the social security number will become a part of a system of records in existence and operating before January 1, 1975.

If solicitation of the social security number is authorized under paragraph (c)(1) or (2) of this section, the NARA employee who requests an individual to disclose his or her social security number shall first inform that individual whether that disclosure is mandatory or voluntary, by what statutory or other authority the number is solicited, and the uses that will be made of it.

(d) *Soliciting information from third parties.* A NARA employee shall inform third parties who are requested to provide information about another individual of the purposes for which the information will be used.

§ 1202.12 Standards of accuracy.

The system manager shall ensure that all records which are used by NARA to make a determination about any individual are maintained with such accuracy, relevance, timeliness, and completeness as is reasonably necessary to ensure fairness to the individual.

§ 1202.14 Rules of conduct.

All NARA employees involved in the design, development, operation, or maintenance of any system of records, or in maintaining any record, shall review the provisions of 5 U.S.C. 552a and the regulations in this part, and shall conduct himself or herself in accordance with the rules of conduct concerning the protection of personal information in the NARA Standards of Conduct.

§1202.16 Safeguarding systems of records.

The system manager shall ensure that appropriate administrative, technical, and physical safeguards are established to ensure the security and confidentiality of records and to protect against any anticipated threats or hazards to their security or integrity which could result in substantial harm, embarrassment, inconvenience, or unfairness to any individual on whom information is maintained. Personnel information contained in both manual and automated systems of records shall be protected by implementing the following safeguards:

(a) Official personnel folders, authorized personnel operating or work folders, and other records of personnel actions effected during a NARA employee's Federal service or affecting the employee's status and service, including information on experience, education, training, special qualifications and skills, performance appraisals, and conduct, shall be stored in a lockable metal filing cabinet when not in use by an authorized person. A system manager may employ an alternative storage system providing that it furnishes an equivalent degree of physical security as storage in a lockable metal filing cabinet.

(b) System managers, at their discretion, may designate additional records of unusual sensitivity which require safeguards similar to those described in paragraph (a) of this section.

(c) System managers shall permit access to and use of automated or manual personnel records only to persons whose official duties require such access, or to subject individuals or their representatives as provided by this part.

§1202.18 Inconsistent issuances of NARA superseded.

Any policies and procedures in any NARA issuance which are inconsistent with the policies and procedures in this part are superseded to the extent of that inconsistency.

§1202.20 Records of other agencies.

(a) *Other agencies' records managed and administered by NARA.* Rules governing the maintenance of systems of records of agencies other than NARA which are located in the National Archives of the United States and Federal Records Centers are in subchapter C of this chapter.

(b) *Current records of other agencies.* If NARA receives a request for access to records which are the primary responsibility of another agency, but which are maintained by or in the temporary possession of NARA on behalf of that agency, NARA shall refer the request to the agency concerned for appropriate action. NARA shall advise the requester that the request has been forwarded to the responsible agency. Records in the custody of NARA which are the primary responsibility of the U.S. Office of Personnel Management (OPM) are governed by the OPM rules promulgated pursuant to the Act.

§1202.22 Subpoenas and other legal demands.

Access to NARA systems of records by subpoena or other legal process shall be in accordance with the provisions of part 1250 of this chapter for administrative records and part 1254 of this chapter for accessioned records, FRC records, and donated historical materials.

Subpart B—Disclosure of Records

§1202.30 Conditions of disclosure.

No NARA employee may disclose any record to any person or to another agency without the express written consent of the subject individual unless the disclosure is:

(a) To NARA employees who have a need for the information in the official performance of their duties;

(b) Required by the provisions of the Freedom of Information Act;

(c) For a routine use as published in a notice in the FEDERAL REGISTER;

(d) To the Bureau of the Census for uses pursuant to title 13 U.S.C.;

(e) To a recipient who has provided NARA with advance adequate written assurance that the record will be used solely as a statistical research or reporting record. The record shall be transferred in a form that is not individually identifiable. The written statement shall include as a minimum:

(1) A statement of the purpose for requesting the records; and

(2) Certification that the records will be used only for statistical purposes; these written statements shall be maintained as records. In addition to deleting personal identifying information from records released for statistical purposes, the system manager shall ensure that the identity of the individual cannot reasonably be deduced by combining various statistical records.);

(f) To the National Archives of the United States as a record which has sufficient historical or other value to warrant its continued preservation by the United States Government;

(g) To another agency or instrumentality of any governmental jurisdiction within or under the control of the United States for a civil or criminal law enforcement activity, if the activity is authorized by law, and if the head of the agency or instrumentality or his or her other designated representative has made a written request to NARA specifying the particular portion desired and the law enforcement activity for which the record is sought;

(h) To a person showing compelling circumstances affecting the health or safety of an individual, not necessarily the individual to whom the record pertains (upon such disclosure, a notification must be sent to the last known address of the subject individual);

(i) To either House of Congress or to a subcommittee or committee (joint or of either House, to the extent that the subject matter falls within its jurisdiction);

(j) To the Comptroller General or any of his authorized representatives in the course of the performance of the duties of the General Accounting Office;

(k) To a consumer reporting agency in accordance with section 3711(f) of title 31; or

(l) Pursuant to the order of a court of competent jurisdiction.

§ 1202.32 Procedures for disclosure.

(a) Address all requests for disclosure of records pertaining to a third party to the NARA Privacy Act Officer (NAA), National Archives and Records Administration, Washington, DC 20408. Upon receipt of such request, NARA shall verify the right of the requester to obtain disclosure pursuant to § 1202.30. Upon verification, the system manager shall make the requested records available. NARA shall acknowledge requests within 10 workdays and shall make a decision within 30 workdays, unless NARA notifies the requester that the time limit must be extended for good cause.

(b) If NARA determines that the disclosure is not permitted under § 1202.30, the Assistant Archivist for Management and Administration or the Inspector General (for records for which the Inspector General is the system manager) shall deny the request in writing. The requester shall be informed of the right to submit a request for review and final determination to the appropriate NARA Privacy Act Appeal Officer.

(1) Requests for review involving records for which the Inspector General is the system manager shall be addressed to the NARA Privacy Act Appeal Officer (N), National Archives and Records Administration, Washington, DC 20408.

(2) Requests for review involving all other records shall be addressed to the NARA Privacy Act Appeal Officer (ND), National Archives and Records Administration, Washington, DC 20408.

[57 FR 22430, May 28, 1992]

§ 1202.34 Accounting of disclosures.

(a) Except for disclosures made pursuant to § 1202.30(a) and (b), an accurate accounting of each disclosure shall be made and retained for 5 years after the disclosure or for the life of the record, whichever is longer. The accounting shall include the date, nature, and purpose of each disclosure, and the name and address of the person or agency to whom the disclosure is made.

(b) The system manager also shall maintain in conjunction with the accounting of disclosures:

(1) A full statement of the justification for the disclosures;

(2) All documentation surrounding disclosure of a record for statistical or law enforcement purposes; and

(3) Evidence of written consent by the subject individual to a disclosure.

(c) Except for the accounting of disclosures made to agencies or instrumentalities in law enforcement activities in accordance with §1202.30 or of disclosures made from exempt systems (see subpart F of this part), the accounting of disclosures shall be made available to the individual upon request. Procedures for requesting access to the accounting are in subpart C of this part.

Subpart C—Individual Access to Records

§1202.40 Forms of requests.

(a) Individuals seeking access to their records or to any information pertaining to themselves which is contained in a system of records should notify the system manager or applicable NARA official at the address indicated in the FEDERAL REGISTER notice describing the pertinent system of records.

(b) The request shall be in writing and shall bear the legend ''Privacy Act Request'' both on the request letter and on the envelope. The request letter shall contain:

(1) The complete name and identifying number of the NARA system as published in the FEDERAL REGISTER;

(2) The full name and address of the subject individual;

(3) A brief description of the nature, time, place, and circumstances of the individual's association with NARA; and

(4) Any other information which the individual believes would help the system manager to determine whether the information about the individual is included in the system of records.

The system manager or other NARA official shall answer or acknowledge the request within 10 workdays of its receipt by NARA.

(c) System managers at their discretion, may accept oral requests for access to a NARA system of records, subject to verification of identity.

§1202.42 Special requirements for medical records.

(a) A system manager who receives a request from an individual for access to those official medical records which belong to the Office of Personnel Management and are described in chapter 339 of the Federal Personnel Manual (medical records which are otherwise filed in the Official Personnel Folder), shall refer the pertinent system of records to a Federal Medical Officer for review and determination in accordance with this section. If no Federal medical officer is available to make the determination required by this section, the system manager shall refer the request and the medical reports concerned to the Office of Personnel Management for a determination.

(b) If, in the opinion of a Federal Medical Officer, medical records requested by the subject individual indicate a condition about which a prudent physician would hesitate to inform a person suffering from such a condition of its exact nature and probable outcome, the system manager shall not release the medical information to the subject individual nor to any person other than a physician designated in writing by the subject individual, his or her guardian, or conservator.

(c) If, in the opinion of a Federal medical officer, the medical information does not indicate the presence of any condition which would cause a prudent physician to hesitate to inform a person suffering from such a condition of its exact nature and probable outcome, the system manager shall release the information to the subject individual or to any person, firm, or organization which the individual authorizes in writing to receive it.

§1202.44 Granting access.

(a) Upon receipt of a request for access to non-exempt records, the system manager shall make such records available to the subject individual or shall acknowledge the request within 10 workdays of its receipt by NARA. The acknowledgment shall indicate when the system manager will make the records available.

(b) If the system manager anticipates more than a 10-day delay in making a record available, he or she also shall include in the acknowledgment specific reasons for the delay.

(c) If a subject individual's request for access does not contain sufficient information to permit the system manager to locate the records, the system

manager shall request additional information from the individual and shall have 10 workdays following receipt of the additional information in which to make the records available or to acknowledge receipt of the request and to indicate when the records will be available.

(d) Records will be made available for authorized access during normal business hours at the NARA offices where the records are located. Requesters should be prepared to identify themselves by signature (i.e., to sign the access log on the date of access and to produce other identification verifying the signature).

(e) Upon request, a system manager shall permit a subject individual to examine the original of a non-exempt record, shall provide the individual with a copy of the record, or both. Fees shall be charged only for copies requested by the individual and not for copies provided to the individual for the convenience of NARA.

(f) Subject individuals may request to pick up a record in person or to receive it by mail, directed to the name and address provided by the individuals in their request. A system manager shall not make a record available to a third party for delivery to the subject individual, except for medical records as outlined in § 1202.42.

(g) Subject individuals who wish to have a person of their choosing review, accompany them in reviewing, or obtain a copy of a record must, prior to the disclosure of their record, sign a statement authorizing the disclosure. The system manager shall maintain this statement with the record.

(h) The procedure for access to an accounting of disclosures is identical to the procedure for access to a record as set forth in this section.

§ 1202.46 Denials of access.

(a) A system manager may deny a subject individual access to his or her record only on the grounds that NARA has published rules in the FEDERAL REGISTER exempting the pertinent system of records from the access requirement. Exempt systems of records are described in subpart F of this part.

(b) Upon receipt of a request for access to a record which the system manager believes is contained within an exempt system of records, he or she shall forward the request to the Assistant Archivist for Management and Administration. The system manager shall append to the request an explanation of the determination that the requested record is contained within an exempt system of records and a recommendation that the request be denied or granted.

(c) If the system manager is the Assistant Archivist for Management and Administration, that person shall retain the responsibility for denying or granting the request.

(d) If the system manager is the Inspector General, that person shall retain the responsibility for denying or granting the request.

(e) The Assistant Archivist for Management and Administration shall, in consultation with legal counsel and such other officials as deemed appropriate, determine if the requested record is in fact contained within an exempt system of records and:

(1) If the record is not contained within an exempt system of records, the Assistant Archivist for Management and Administration shall notify the system manager to grant the request in accordance with § 1202.44, or

(2) If the record is contained within an exempt system of records, the Assistant Archivist for Management and Administration shall:

(i) Notify the requester that the request is denied, including a statement justifying the denial and advising the requester of the right to judicial review of that decision as provided in § 1202.74; or

(ii) Notify the system manager to make the record available to the requester in accordance with § 1202.44, notwithstanding the inclusion of the record within an exempt system of records.

[50 FR 27197, July 1, 1985, as amended at 54 FR 32067, Aug. 4, 1989]

§ 1202.48 Appeal of denial of access within NARA.

(a) Requesters denied access in whole or part to records pertaining to them, exclusive of those records for which the system manager is the Archivist of the

United States, may file with NARA an appeal of that denial.

(1) Appeals involving records for which the Inspector General is the system manager should be addressed to NARA Privacy Act Appeal Official (N), National Archives and Records Administration, Washington, DC 20408.

(2) All other appeals should be addressed to NARA Privacy Act Appeal Official (ND), National Archives and Records Administration, Washington, DC 20408.

(b) Each appeal to the NARA Privacy Act appeal official shall be in writing. The appeal should bear the legend ''Privacy Act—Access Appeal,'' on both the face of the letter and the envelope.

(c) Upon receipt of an appeal, the NARA Privacy Act appeal official shall consult with the system manager, the official who made the denial, legal counsel, and such other officials as may be appropriate. If the NARA Privacy Act appeal official, in consultation with these officials, determines that the request for access should be granted because the subject records are not exempt, the NARA Privacy Act appeal official shall immediately either instruct the system manager in writing to grant access to the record in accordance with § 1202.44 or shall grant access and shall notify the requester of that action.

(d) If the NARA Privacy Act appeal official, in consultation with the officials specified in paragraph (c) of this section, determines that the appeal should be rejected, the NARA Privacy Act appeal official immediately shall notify the requester in writing of that determination. This action shall constitute NARA's final determination on the request for access to the record and shall include:

(1) The reason for the rejection of the appeal; and

(2) Notice of the requester's right to seek judicial review of NARA's final determination, as provided in § 1202.74.

(e) The final NARA determination will be made no later than 30 workdays from the date on which the appeal is received by the NARA Privacy Act appeal official. The NARA Privacy Act appeal official may extend this time limit by notifying the requester in writing before the expiration of the 30 workdays. The NARA Privacy Act appeal official's notification shall include an explanation of the reasons for the extension of time.

(f) Denial of access by the Archivist to records for which the Archivist is the system manager shall constitute the NARA final determination in such instances. Requesters shall be given notice of their right to seek judicial review of the determination, as provided in § 1202.74.

[50 FR 27197, July 1, 1985, as amended at 54 FR 32067, Aug. 4, 1989]

§ 1202.50 Records available at a fee.

The system manager shall provide one electrostatic copy of a record to a requester at a fee of $0.20 per page if NARA makes the copy or $0.10 per page if the requester makes the copy on a NARA self-service copier.

[53 FR 12150, Apr. 13, 1988]

§ 1202.52 Prepayment of fees over $25.

If the system manager determines that the estimated total fee is likely to exceed $25, the system manager shall notify the individual that the estimated fee must be prepaid prior to NARA's making the records available. NARA will remit any excess amount paid by the individual or bill the individual for an additional amount if there is a variation between the final fee charged and the amount prepaid.

§ 1202.54 Form of payment.

Payment shall be by check or money order payable to the National Archives and Records Administration and shall be addressed to the system manager.

[53 FR 12150, Apr. 13, 1988]

Subpart D—Requests To Amend Records

§ 1202.60 Submission of requests to amend records.

Subject individuals who desire to amend any record containing personal information about themselves should write to the NARA system manager specified in the pertinent FEDERAL REGISTER notice concerning NARA's systems of records. A current NARA

employee who desires to amend personnel records should write to the Director of Personnel, National Archives (NAP), Washington, DC 20408. Each request shall include evidence of and justification for the need to amend the pertinent record. Each request should bear the legend ''Privacy Act—Request To Amend Record'' prominently marked on both the face of the request letter and the envelope.

§ 1202.62 Review of requests to amend records.

(a) The system manager shall acknowledge receipt of a request to amend a record within 10 workdays. If possible, the acknowledgment should include the system manager's determination either to amend the record or to deny the request to amend as provided in § 1202.66.

(b) When reviewing a record in response to a request to amend, the system manager shall assess the accuracy, relevance, timeliness, and completeness of the existing record in light of the proposed amendment. The system manager shall determine whether the amendment is justified. With respect to a request to delete information, the system manager also shall review the request and existing record to determine whether the information is relevant and necessary to accomplish an agency purpose required to be accomplished by law or Executive order.

§ 1202.64 Approval of requests to amend.

If the system manager determines that amendment of a record is proper in accordance with the request to amend, he or she promptly shall make the necessary amendment to the record and shall send a copy of the amended record to the subject individual. Where an accounting of disclosure has been maintained, the system manager shall advise all previous recipients of the record of the fact that an amendment has been made and give the substance of the amendment. Where practicable, the system manager shall send a copy of the amended record to previous recipients. The system manager shall advise the Assistant Archivist for Management and Administration that a request to amend has been approved.

§ 1202.66 Denial of requests to amend.

(a) Except where the system manager is the Inspector General, if the system manager determines that an amendment of a record is improper or that the record should be amended in a manner other than that requested by an individual, the request to amend and the system manager's determinations and recommendations shall be referred to the Assistant Archivist for Management and Administration. If the system manager is the Inspector General, that person shall retain the responsibility for granting or denying the request to amend.

(b) If the Assistant Archivist for Management and Administration, after reviewing the request to amend a record, determines to amend the record in accordance with the request, the Assistant Archivist promptly shall return the request to the system manager with instructions to make the requested amendments in accordance with § 1202.64.

(c) If the Assistant Archivist for Management and Administration, after reviewing the request to amend a record, determines not to amend the record in accordance with the request, the Assistant Archivist promptly shall advise the requester in writing of the decision. The denial letter shall state the reasons for the denial of the request to amend; include proposed alternative amendments, if appropriate; state the requester's right to appeal the denial of the request to amend; and state the procedure for appealing.

[50 FR 27197, July 1, 1985, as amended at 54 FR 32068, Aug. 4, 1989]

§ 1202.68 Agreement to alternative amendments.

If the denial of a request to amend a record includes proposed alternative amendments, and if the requester agrees to accept them, the requester shall notify the NARA official who signed the denial letter. That official shall immediately instruct the system manager to make the necessary amendments in accordance with § 1202.64.

[54 FR 32068, Aug. 4, 1989]

§1202.70 Appeal of denial of request to amend a record.

(a) A requester who disagrees with a denial of a request to amend a record may file an appeal of that denial.

(1) If the denial was signed by the Assistant Archivist for Management and Administration, the requester shall address the appeal to the NARA Privacy Act Appeal Official (ND), Washington, DC 20408.

(2) If the denial was signed by the Inspector General, the requester shall address the appeal to the NARA Privacy Act Appeal Official (N), Washington, DC 20408.

(3) If the requester is an employee of NARA and the denial to amend involves a record maintained in the employee's Official Personnel Folder, as described in chapter 293 of the Federal Personnel Manual, the appeal should be addressed to the Assistant Director, Workforce Information Office, Compliance and Investigations Group, Office of Personnel Management, 1900 E Street, NW., Washington, DC 20415.

(b) Each appeal to the NARA Privacy Act appeal official shall be in writing and must be received no later than 30 calendar days from the date of the requester's receipt of a denial of a request to amend a record. The appeal shall bear the legend ''Privacy Act—Appeal,'' both on the face of the letter and the envelope.

(c) Upon receipt of an appeal, the NARA Privacy Act appeal official shall consult with the system manager, the official who made the denial, legal counsel, and such other officials as may be appropriate. If the NARA Privacy Act appeal official, in consultation with these officials, determines that the record should be amended as requested, he or she immediately shall instruct the system manager to amend the record in accordance with §1202.64 and shall notify the requester of that action.

(d) If the NARA Privacy Act appeal official, in consultation with the officials specified in paragraph (c) of this section, determines that the appeal should be rejected, the NARA Privacy Act appeal official immediately shall notify the requester in writing of that determination. This action shall constitute the NARA final determination on the request to amend the record and shall include:

(1) The reasons for the rejection of the appeal;

(2) Proposed alternative amendments, if appropriate, which the requester subsequently may accept in accordance with §1202.68;

(3) Notice of the requester's right to file a Statement of Disagreement for distribution in accordance with §1202.72; and

(4) Notice of the requester's right to seek judicial review of the NARA final determination, as provided in §1202.74.

(e) The NARA final determination shall be made no later than 30 workdays from the date on which the appeal is received by the NARA Privacy Act appeal official. In extraordinary circumstances, the NARA Privacy Act appeal official may extend this time limit by notifying the requester in writing before the expiration of the 30 workdays. The NARA Privacy Act appeal official's notification shall include a justification for the extension of time.

[50 FR 27197, July 1, 1985, as amended at 54 FR 32068, Aug. 4, 1989]

§1202.72 Statements of disagreement.

Upon receipt of a NARA final determination denying a request to amend a record, the requester may file a Statement of Disagreement with the appropriate system manager. The Statement of Disagreement shall include an explanation of why the requester believes the record to be inaccurate, irrelevant, untimely, or incomplete. The system manager shall maintain the Statement of Disagreement in conjunction with the pertinent record and shall include a copy of the Statement of Disagreement in any disclosure of the pertinent record. The system manager shall provide a copy of the Statement of Disagreement to any person or agency to whom the record has been disclosed only if the disclosure was subject to the accounting requirements of §1202.34.

§1202.74 Judicial review.

Within 2 years of receipt of a NARA final determination as provided in §1202.48 or §1202.70, a requester may seek judicial review of that determination. A civil action must be filed in the

Federal District Court in which the requester resides or has his or her principal place of business or in which the NARA records are situated, or in the District of Columbia.

Subpart E—Report on New Systems of Records and Alteration of Existing Systems

§ 1202.80 Reporting requirement.

(a) Prior to the establishment of a new NARA system of records or the alteration of an existing NARA system of records, the system manager shall notify the Assistant Archivist for Management and Administration of the proposed new system or alteration. The system manager shall include with the notification a complete description and justification for each system of records that the system manager proposes to establish or alter. If the Assistant Archivist for Management and Administration determines that the establishment or alteration of a system of records is in the best interest of the Government, the Assistant Archivist for Management and Administration will submit, no later than 60 calendar days prior to the establishment or alteration of a system of records, a report of the proposal to the President of the Senate, the Speaker of the House of Representatives, and the Director of the Office of Management and Budget for their evaluation of the probable or potential effect of the proposal on the privacy and other personal or property rights of individuals.

(b) The reports required by this regulation are exempt from reports control.

§ 1202.82 Federal Register notice of establishment of new system or alteration of existing system.

The NARA Assistant Archivist for Management and Administration shall publish in the FEDERAL REGISTER a notice of the proposed establishment or alteration of a system of records when:

(a) Notice is received that the Senate, the House of Representatives, and the Office of Management and Budget do not object to the establishment of a new system of records or to the alteration of an existing system of records, or

(b) No fewer than 30 calendar days have elapsed from the date of submission of the proposal to the Senate, the House of Representatives, and the Office of Management and Budget without receipt by NARA of an objection to the proposal.

§ 1202.84 Effective date of new systems of records or alteration of an existing system of records.

Systems of records proposed to be established or altered in accordance with this subpart shall be effective no sooner than 30 calendar days from the publication of the notice required by § 1202.82.

Subpart F—Exemptions

§ 1202.90 Specific exemptions.

(a) The following NARA systems of records are exempt from subsections (c)(3); (d); (e)(1); (e)(4) (G), (H), and (I); and (f) of the Privacy Act of 1974;

(1) Investigation Case Files, NARA–23.

(2) Personnel Security Case Files, NARA–24.

(b) These systems of records are exempt:

(1) To the extent that the systems consist of investigatory material compiled for law enforcement purposes; however, if any subject individual is denied any right, privilege, or benefit to which the individual would otherwise be eligible, as a result of the maintenance of such material, such material shall be provided to such individual, except to the extent that the disclosure of such material would reveal the indentity of a source who furnished information to the Government under an express promise that the identity of the source would be held in confidence, or, prior to the effective date of this section, under an implied promise that the identity of the source would be held in confidence; and

(2) To the extent the systems of records consist of investigatory material compiled solely for the purpose of determining suitability, eligibility, or qualification for Federal civilian employment, military service, Federal contracts, or access to classified information, but only to the extent that the

disclosure of such material would reveal the identity of a source who furnished information to the Government under an express promise that the identity of the source would be held in confidence.

(c) These NARA systems of records have been exempted to maintain the efficacy and integrity of investigations conducted pursuant to NARA's responsibilities in the areas of Federal employment, Government contracts, and access to security classified information.

Subpart G—Assistance and Referrals

§1202.100 Requests for assistance and referrals.

Requests for assistance and referral to the responsible system manager or other NARA employee charged with implementing these regulations should be made to the NARA Privacy Act Officer (NAA), National Archives and Records Administration, Washington, DC 20408.

[57 FR 22430, May 28, 1992]

PART 1206—NATIONAL HISTORICAL PUBLICATIONS AND RECORDS COMMISSION

Subpart A—General

Sec.
1206.1 Scope of part.
1206.2 Definitions.
1206.4 Purpose of the Commission.
1206.6 The Commission's Grant Program.
1206.7 Organization.

Subpart B—Publications Program

1206.10 General.
1206.12 Scope and purpose.
1206.16 Project requirements.
1206.18 Subsidies for printing costs.
1206.20 Microform publication standards.

Subpart C—Records Program

1206.30 General.
1206.32 Scope and purpose.
1206.36 State historical records coordinator.
1206.37 Deputy State historical records coordinator.
1206.38 State historical records advisory board.

Subpart D—Grant Procedures

1206.50 Types of grants.
1206.52 Grant limitations.
1206.54 Who may apply.
1206.56 When to apply.
1206.58 How to apply.
1206.66 Review and evaluation of grant proposals.
1206.68 Grant administration responsibilities.
1206.70 Grant instrument.
1206.78 Grant reports.
1206.79 Audits.
1206.80 Safety precautions.
1206.82 Acknowledgement.
1206.94 Compliance with Governmentwide requirements.

AUTHORITY: 44 U.S.C. 2104(a); 44 U.S.C. 2501–2506.

SOURCE: 42 FR 56123, Oct. 21, 1977, unless otherwise noted. Redesignated at 50 FR 15723, Apr. 19, 1985.

EDITORIAL NOTE: Nomenclature changes to part 1206 appear at 50 FR 15723, 15728, Apr. 19, 1985.

Subpart A—General

§1206.1 Scope of part.

This part prescribes the procedures and rules governing the operation of the grant program of the National Historical Publications and Records Commission.

[61 FR 5656, Feb. 13, 1996]

§1206.2 Definitions.

(a) The term *Commission* means the National Historical Publications and Records Commission or the Chairman of the Commission or the Executive Director of the Commission, acting on the Commission's behalf.

(b) The term *historical records* means record material having permanent or enduring value regardless of physical form or characteristics, including but not limited to manuscripts, personal papers, official records, maps, and audiovisual materials.

(c) In §§1206.36 and 1206.38, the term *State* means all 50 States of the Union, plus the District of Columbia, Puerto Rico, the U.S. Virgin Islands, Guam, American Samoa, Northern Mariana Islands, and the Trust Territories of the Pacific.

(d) In § 1206.36(a), the term *State-funded agency* means any historical or archival agency that receives a regular State appropriation.

(e) The term *State projects* means records projects directed by organizations operating within and involving records or activities within one State. Records or activities of such projects will typically be under the administrative control of the organization applying for the grant. The records or activities need not relate to the history of the State.

(f) The term *regional projects* means records projects involving records or activities in more than one State in a region. Regional projects include those undertaken by regional archival groups or consortia.

(g) The term *national projects* means records projects involving records or activities in several regions, in widely separated States, or that have an international component. In general, the location of the records and/or the site of grant-funded activities will determine the category of submission.

[42 FR 56123, Oct. 21, 1977. Redesignated at 50 FR 15723, Apr. 19, 1985, and amended at 55 FR 21542, May 25, 1990; 61 FR 5656, Feb. 13, 1996]

§ 1206.4 Purpose of the Commission.

The National Historical Publications and Records Commission makes plans, estimates, and recommendations regarding the preservation and use of historical records that may be important for an understanding and appreciation of the history of the United States. It also cooperates with and encourages appropriate Federal, State, and local agencies and nongovernmental institutions in collecting and preserving and, when it considers it desirable, in editing and publishing the records of outstanding citizens, groups, or institutions and other important documents. On recommendation of the Commission, the Archivist of the United States makes grants to State and local agencies and to non-profit organizations and institutions and to individuals in support of these programs.

[55 FR 21542, May 25, 1990]

§ 1206.6 The Commission's Grant Program.

The Commission operates primarily through a grant program supporting publications projects (subpart B) and records projects (subpart C). Fellowships for individuals in archival administration and documentary editing are also offered, as well as an annual institute for the editing of historical documents.

[61 FR 5657, Feb. 13, 1996]

§ 1206.7 Organization.

The Executive Director, Program Director, and the staff of the Commission administer the publications and records grants under the guidance of the Commission and the immediate administrative direction of its chairman, the Archivist of the United States.

[61 FR 5657, Feb. 13, 1996]

Subpart B—Publications Program

SOURCE: 55 FR 21542, May 25, 1990, unless otherwise noted.

§ 1206.10 General.

This subpart describes the scope, purpose, and operation of that part of the grant program relating to publications projects and prescribes requirements applicable to printed, microform, and electronic publication projects. Grant application and administration procedures are given in subpart D of this part.

[61 FR 5657, Feb. 13, 1996]

§ 1206.12 Scope and purpose.

Publications projects are intended to ensure the dissemination and accessibility of documentary source material important to the study and understanding of U.S. history. Projects should therefore be based upon material of widespread interest among scholars, students, and informed citizens. Documents should have historical value and interest that transcend local and State boundaries.

[61 FR 5657, Feb. 13, 1996]

§1206.16 Project requirements.

(a) Each publications project shall include either the papers of a U.S. leader in a significant phase of life in the United States or documents relating to some outstanding event or to some topic or theme of national significance in U.S. history. These projects shall consist of collecting, compiling, editing, and publishing, either selectively or comprehensively, the papers or documents. Publication may be in the form of printed, microform, or electronic editions. Electronic formats for publication of documentary sources will be considered only when suitable preservation of the data can be assured. Three copies of each book publication should be deposited with the National Historical Publications and Records Commission (NHPRC), Washington, DC 20408. These copies may be included as part of the five complimentary copies to be sent by presses receiving subvention grants.

(b) For microform projects, the grantee shall make positive prints and all finding aids available to institutions, scholars, or students through interlibrary loan and for purchase. Five complimentary copies of guides and indexes produced by the projects shall be sent to the Commission.

[61 FR 5657, Feb. 13, 1996]

§1206.18 Subsidies for printing costs.

(a) The Commission will consider grant applications from university and other nonprofit presses for the subvention of part of the costs of manufacturing and disseminating volumes that have been formally endorsed by the Commission. Grants not exceeding $10,000 per volume ($3,000 for reprints) are awarded upon recommendation of the Commission to promote the availability of Commission-supported documentary editions.

(b) The granting of a subvention shall be used to encourage the highest standards in the production of volumes, particularly the quality of paper and ink.

(c) The Commission shall receive five complimentary copies of each published volume for which a subvention grant is made.

[55 FR 21542, May 25, 1990, as amended at 61 FR 5657, Feb. 13, 1996]

§1206.20 Microform publication standards.

Technical standards for NHPRC-sponsored microform projects are stated in the brochure ''National Historical Publications and Records Commission: Microform Guidelines,'' which will be supplied to applicants upon request and to grantee institutions at the time a grant is made for a microform project.

[61 FR 5657, Feb. 13, 1996]

Subpart C—Records Program

SOURCE: 55 FR 21543, May 25, 1990, unless otherwise noted.

§1206.30 General.

This subpart describes the scope, purpose, and operation of that part of the grant program relating to records projects. Grant application and administration procedures are given in subpart D of this part.

[61 FR 5657, Feb. 13, 1996]

§1206.32 Scope and purpose.

Through its support for records projects, the National Historical Publications and Records Commission encourages a greater effort at all levels of government and by private organizations to preserve and make available for use those records, generated in every facet of life, that further an understanding and appreciation of U.S. history. In the public sector, these historical records document significant activities of State, county, municipal, and other units of government. In the private sector, historical records include manuscripts, personal papers, and family or corporate archives that are maintained by a variety of general repositories as well as materials in special collections relating to particular fields of study, including the arts, business, education, ethnic and minority groups, immigration, labor, politics, professional services, religion, science, urban affairs, and women. In addition to recommending the supporting of projects relating directly to a body of records, the Commission may also recommend support for projects to advance the state of the art, to promote cooperative efforts among institutions and organizations, and to improve the

knowledge, performance, and professional skills of those who work with historical records.

[61 FR 5657, Feb. 13, 1996]

§ 1206.36 State historical records coordinator.

(a) The governor of each State desiring to participate fully in the program shall appoint a State historical records coordinator (coordinator), who shall be the full-time professional official in charge of the State archival program or agency. If the State has another state-funded historical agency or agencies with archival and/or records responsibilities, the official(s) in charge of at least one of these shall be a member of the State historical records advisory board (board). The coordinator is appointed to a minimum four-year term, but may continue to serve until replaced by the governor or until resignation. The coordinator shall serve as chair of the board and shall be the central coordinating officer for the historical records grant program in the State. The person appointed will not be deemed to be an official or employee of the Federal Government and will receive no Federal compensation for such service. The pamphlet ''Guidelines for State Historical Records Coordinators and State Historical Records Advisory Boards,'' which is available from the Commission and from State historical records coordinators, provides further information on the role of the coordinator.

(b) In the event of the resignation of the coordinator or other inability to serve, a deputy coordinator, if one has been designated, will serve as acting State coordinator until the governor makes an appointment. In the absence of a deputy coordinator, the NHPRC will recognize an acting coordinator, selected by the state board, who shall serve until the governor appoints a coordinator in order to conduct the necessary business of the board.

[61 FR 5657, Feb. 13, 1996]

§ 1206.37 Deputy State historical records coordinator.

A deputy State historical records coordinator may be designated to assist in carrying out the duties and responsibilities of the coordinator and to serve as an acting coordinator at the coordinator's direction or upon the coordinator's resignation or other inability to serve.

§ 1206.38 State historical records advisory board.

(a) Each State desiring to participate in the program shall define an appointment process and appoint a State historical records advisory board consisting of at least seven members, including the State historical records coordinator, who chairs the board, unless otherwise specified in state statute. The coordinator shall provide the Commission with a description of the appointment process. A majority of the members shall have recognized experience in the administration of government records, historical records, or archives. The board should be as broadly representative as possible of the public and private archives, records offices, and research institutions and organizations in the State. Board members will not be deemed to be officials or employees of the Federal Government and will receive no Federal compensation for their service on the board. They are appointed for three years with the possibility of renewal; and preferably terms are staggered so that one-third of the board is newly appointed or reappointed each year. If the board is not established in State law, members' terms continue until replacements are appointed. The board may adopt standards for attendance and may declare membership positions open if those standards are not met.

(b) The board is the central advisory body for historical records planning and for Commission-funded projects developed and carried out within the State. The board serves as a coordinating body to facilitate cooperation among historical records repositories and other information agencies within the state and as a state-level review body for grant proposals as defined in the Commission's guidelines. Specifically, the board may perform such duties as sponsoring and publishing surveys of the conditions and needs of historical records in the State; soliciting or developing proposals for projects to be carried out in the State with

NHPRC grants; reviewing proposals by institutions in the State and making recommendations about these to the Commission; developing, revising, and submitting to the Commission State priorities for historical records projects following guidelines developed by the Commission; promoting an understanding of the role and value of historical records; acting in an advisory capacity to the state archives and other statewide archival or records agencies; and reviewing, through reports and otherwise, the operation and progress of projects in the State financed by NHPRC grants.

[61 FR 5658, Feb. 13, 1996]

Subpart D—Grant Procedures

SOURCE: 55 FR 21544, May 25, 1990, unless otherwise noted.

§ 1206.50 Types of grants.

(a) *General.* The Archivist of the United States, after considering the advice and recommendations of the Commission, may make three types of NHPRC grants: Outright grants, matching grants, and combined grants.

(b) *Outright grants.* An application for an outright grant requests an NHPRC grant for the entire cost of a project, minus the share of the cost borne by the applicant. The maximum possible cost sharing is encouraged in every proposal, and the level of cost sharing will be an important factor in the Commission's recommendation on most types of proposals.

(c) *Matching grants.* An application for a matching grant should be made when an applicant has prospects of securing financial support from a third party or, in the case of a State or local government agency, funds from the institution's own appropriation source are provided expressly for the project proposed in the application. Upon Commission approval of a matching grant request, the applicant shall present written documentation certifying that matching funds have been provided for the project by the non-Federal source. In the case of a State or local government agency, the matching requirement may also be met through matching funds from the State or local government, provided that it can be demonstrated to the Commission's satisfaction that the matching amount has been provided above and beyond funds previously allocated or planned for the agency's budget and that the funds are set aside exclusively to support the project proposed for an NHPRC grant. Applicants need not, however, have money in hand to make a matching grant request; they need only assure the Commission that they have reasonable prospects of obtaining the needed amounts.

(d) *Combined grants.* A combined grant comprises both outright funds and matching funds. When the funds an applicant can raise plus the equivalent amount of an NHPRC grant do not equal the required budget, the difference is requested in outright funds. For example, if the applicant needs $75,000 and is able to raise $25,000 in gifts or in a new appropriation for the project, a combined grant of $25,000 outright and $25,000 in matching funds for a total of $50,000 should be requested from the Commission. Rules governing the release of matching funds in matching grants also govern the release of matching funds in combined grants.

[55 FR 21544, May 25, 1990, as amended at 61 FR 5658, Feb. 13, 1996]

§ 1206.52 Grant limitations.

Grant limitations are described in the grant program guidelines pamphlet, available on request from the Commission.

[61 FR 5658, Feb. 13, 1996]

§ 1206.54 Who may apply.

The Commission will consider applications from State and local government agencies, nonprofit organizations and institutions, Federally acknowledged or state-recognized Native American tribes or groups, and, under certain conditions, from individuals. Proposals for State projects falling under the Commission's goals, ''To Assure the Preservation of the Nation's Documentary Heritage through State Collaborative Efforts'' and ''To Achieve Progress in the Preservation and Use of Original Source Material,'' as defined in the grant program guidelines, will be accepted only from applicants in

States in which a State historical records coordinator and a State historical records advisory board are currently appointed. This requirement does not apply to regional or national projects.

[61 FR 5658, Feb. 13, 1996]

§ 1206.56 When to apply.

Grant proposals are considered during Commission meetings held three times during the year. For current application deadlines contact the grant program staff or State historical records coordinators (for records grant proposals). Some State boards have established pre-submission review deadlines for records proposals; further information is available from State coordinators.

[61 FR 5658, Feb. 13, 1996]

§ 1206.58 How to apply.

(a) *Contact with NHPRC staff.* The Commission encourages applicants to discuss proposals through correspondence, by phone, or in person with Commission staff and/or, in the case of records proposals, with the appropriate State historical records coordinator before the proposal is submitted and at all stages of development of the proposal.

(b) *Application forms.* Applicants for NHPRC grants shall use Standard Form 424, Application for Federal Assistance, and NA Form 17001, Budget Form (OMB Control Number 3095–0004). Applicants for subvention grants also submit the NHPRC subvention grant application (OMB Control Number 3095–0021), and applicants for archival administration fellowship host institution grants submit a special application (OMB Control Number 3095–0015). Applicants for NHPRC-sponsored fellowships complete the appropriate fellowship application (OMB Control Numbers 3095–0011, 3095–0012, or 3095–0014). Copies of these applications and forms are available from the commission. Project proposals and related correspondence should be sent to the National Historical Publications and Records Commission (NHPRC), Washington, DC 20408.

(c) *Assurances and certifications.* All grant applications to the Commission must include the following assurances and certifications signed by an authorized representative of the applicant institution, or in the case of an individual applicant, by that individual: Standard Form 424B, Assurances: Non-Construction Programs; the Certification Regarding Debarment, Suspension, and Other Responsibility Matters specified in part 1209, appendix B; the Certification Regarding Drug-free Workplace Requirements specified in part 1209, appendix C, of this chapter; and, if the application requests more than $100,000 in Federal funds, a signed Certification for Grants, Loans, or Cooperative Agreements in Excess of $100,000 (certification regarding lobbying). Assurance and certification language is included in the program pamphlet.

(d) *Program guidelines pamphlet.* Supplementary information for applicants is contained in the pamphlet, ''Program Guidelines: Applications and Grants,'' which is available from the Commission upon request. The pamphlet is also available from State historical records coordinators. This pamphlet includes copies of the application form and certifications, guidelines on the preparation of project budgets and program narrative statements, and other guidance on applying for and administering NHPRC grants. OMB Control Number 3095–0013 has been assigned to this information collection.

[55 FR 21544, May 25, 1990, as amended at 61 FR 5658, Feb. 13, 1996]

§ 1206.66 Review and evaluation of grant proposals.

(a) *Records grant proposals.* For records grant proposals, State historical records advisory boards review and evaluate proposals for State projects and forward recommendations for action to the Commission. Boards may decide that certain proposals are incomplete or require further development; in these instances proposals may be returned to the applicant by the board with a recommendation for revision and resubmission in a future funding cycle. The Commission staff shall be informed of the recommendations. All records grant proposals for which recommendations for Commission action are received from State boards and

regional, national, and State board-sponsored proposals received directly by the Commission are reviewed by the Commission staff for completeness, conformity with application requirements and relevance to the objectives of the grant program. Regional and national proposals and proposals submitted by boards on their own behalf may also be referred by the Commission staff to selected State historical records coordinators, members of boards, or others for appropriate review and evaluation of the projects. Following review and evaluation, proposals are referred to the Commission at regular meetings.

(b) *Publications grant proposals.* The Commission staff reviews publications grant proposals for completeness, conformity with application requirements, and relevance to the objectives of the grant program. Proposals are sent to specialists in American history and documentary editing for review and recommendations. The recommendations are considered by the full Commission at regular meetings.

(c) *Subvention grant applications.* The Commission staff reviews subvention grant applications to ensure their adherence to established technical standards for the production of printed volumes, particular in the quality of paper and ink. Staff recommendations are considered by the full Commission at regular meetings.

[55 FR 21544, May 25, 1990, as amended at 61 FR 5659, Feb. 13, 1996]

§ 1206.68 Grant administration responsibilities.

Primary responsibility for the administration of grants is shared by the grantee institution and the project director designated by the institution. In the case of grants made to individuals, the individual named as project director has primary responsibility for the administration of the grant. Grants shall be administered in conformance with either the regulations in part 1210 of this chapter or, in the case of State and local governments, with the regulations in part 1207 of this chapter. All grants shall be in conformance with part 1209 of this chapter.

(a) *Changes in the grant project*:

(1) *Extension of the grant period.* Requests for extension of the grant period must be made before the end of the grant period and must be signed by the grantee institution's authorized representative as indicated on the grant application form (SF 424). No extensions will be allowed unless grantees are up-to-date in their submission of financial and narrative reports.

(2) *Rebudgeting.* To meet unanticipated program needs, grantees may adjust the amounts allocated to existing budget lines for both grant funds and cost sharing and may transfer grant funds among existing NHPRC-funded direct cost categories that appear in the final project budget approved by the Commission at the time of the grant award. Cost-sharing funds may also be shifted among existing cost-sharing categories. For grants where the NHPRC's award is less than $100,000, grantees may make these transfers without NHPRC approval. When Commission grant awards are for $100,000 or more, grantees must obtain prior approval from the NHPRC when cumulative transfers among direct cost categories total more than 10 percent of the total project budget (i.e., grant funds plus other funds). In addition, the Program Director of the Commission may approve the use of NHPRC grant funds for new cost categories for which Commission funds were not provided in the final approved budget where such action seems appropriate for the fulfillment of the original purposes of the grant and where the amount of funds involved does not exceed 10 percent of the amount of the award or $5,000, whichever is less. Requests to establish these new cost categories must be made in writing and signed by the grantee institution's authorized representative. Requests that exceed this limit are subject to approval by the full Commission.

(3) *Other changes requiring prior approval.* Prior written approval from the Commission must be obtained for financial or programmatic changes in all cases involving the following: revision of the scope or objectives of the project; change of the project director or other key project personnel who have been specifically named in the grant application or award or related

correspondence; and, contracting out, subgranting, or otherwise obtaining the services of a third party to perform activities central to the purposes of the grant, unless specified in the grant proposal.

(b) *Submission of requests for changes.* All requests for approval of budget or programmatic changes must be submitted in the form of a letter signed by the grantee institution's authorized representative for the grant and addressed to the Program Director. A written response signed by the Program Director of the Commission will constitute approval for the changes.

[61 FR 5659, Feb. 13, 1996]

§ 1206.70 Grant instrument.

The grant award instrument is a letter from the Archivist of the United States to the grantee. The letter and attachments specify terms of the grant.

§ 1206.78 Grant reports.

(a) Financial status reports and narrative progress reports are required for all grants. Standard Form 269, Financial Status Report, shall be used for all financial reports. The pamphlet, ''Program Guidelines: Applications and Grants,'' which is provided to each grantee and is available from the Commission on request, specifies the content of the narrative progress reports (OMB Control Number 3095–0013).

(b) Financial reports are due annually 30 days after the end of each reporting period. Narrative progress reports are due 30 days after the end of each six-month period. Final financial and narrative reports are due within 90 days after the expiration or termination of the grant period. Grants with a duration of six months or less require a final report only. Additional rules on financial and performance reports are found in §§ 1210.51 and 1210.52 or §§ 1207.40 and 1207.41 of this chapter, as appropriate.

[61 FR 5659, Feb. 13, 1996]

§ 1206.79 Audits.

Grantees are responsible for obtaining audits in accordance with either the Single Audit Act of 1984 (31 U.S.C. 7501–7), for which audit requirements have been set forth in Office of Management and Budget (OMB) Circular A–128, ''Audits of State and Local Governments,'' or requirements established under OMB Circular A–133, ''Audits of Institutions of Higher Education and Other Nonprofit Organizations,'' as appropriate. Copies are available from the Commission office or from OMB. The grantee is responsible for ensuring that the NHPRC receives a copy of the audit report for any audit performed during the grant period or for three years thereafter. A reasonable portion of grant funds, as defined in the OMB Circular, may be used to comply with audit requirements. The Commission prefers that the grantee assume such costs as institutional cost sharing.

[61 FR 5660, Feb. 13, 1996]

§ 1206.80 Safety precautions.

NARA and the Commission cannot assume any liability for accidents, illnesses, or claims arising out of any work undertaken with the assistance of the grant.

§ 1206.82 Acknowledgment.

Grantee institutions, grant directors, or grant staff personnel may publish results of any work supported by an NHPRC grant without review by the Commission. Publications or other products resulting from the project, shall, however, acknowledge the assistance of the NHPRC grant.

§ 1206.94 Compliance with Governmentwide requirements.

In addition to the grant application and grant administration requirements outlined in this part 1206, grantees are responsible for complying with applicable Governmentwide requirements contained in part 1210 or part 1207 of this chapter, as appropriate, and part 1209 of this chapter.

[61 FR 5660, Feb. 13, 1996]

PART 1207—UNIFORM ADMINISTRATIVE REQUIREMENTS FOR GRANTS AND COOPERATIVE AGREEMENTS TO STATE AND LOCAL GOVERNMENTS

Subpart A—General

Sec.
1207.1 Purpose and scope of this part.
1207.2 Scope of subpart.
1207.3 Definitions.
1207.4 Applicability.
1207.5 Effect on other issuances.
1207.6 Additions and exceptions.

Subpart B—Pre-Award Requirements

1207.10 Forms for applying for grants.
1207.11 State plans.
1207.12 Special grant or subgrant conditions for ''high-risk'' grantees.

Subpart C—Post-Award Requirements

FINANCIAL ADMINISTRATION

1207.20 Standards for financial management systems.
1207.21 Payment.
1207.22 Allowable costs.
1207.23 Period of availability of funds.
1207.24 Matching or cost sharing.
1207.25 Program income.
1207.26 Non-Federal audit.

CHANGES, PROPERTY, AND SUBAWARDS

1207.30 Changes.
1207.31 Real property.
1207.32 Equipment.
1207.33 Supplies.
1207.34 Copyrights.
1207.35 Subawards to debarred and suspended parties.
1207.36 Procurement.
1207.37 Subgrants.

REPORTS, RECORDS, RETENTION, AND ENFORCEMENT

1207.40 Monitoring and reporting program performance.
1207.41 Financial reporting.
1207.42 Retention and access requirements for records.
1207.43 Enforcement.
1207.44 Termination for convenience.

Subpart D—After-the-Grant Requirements

1207.50 Closeout.
1207.51 Later disallowances and adjustments.
1207.52 Collection of amounts due.

Subpart E—Entitlement [Reserved]

AUTHORITY: 44 U.S.C. 2104.

SOURCE: 53 FR 8072, 8087, Mar. 11, 1988, unless otherwise noted.

Subpart A—General

§1207.1 Purpose and scope of this part.

This part establishes uniform administrative rules for Federal grants and cooperative agreements and subawards to State, local and Indian tribal governments.

§1207.2 Scope of subpart.

This subpart contains general rules pertaining to this part and procedures for control of exceptions from this part.

§1207.3 Definitions.

As used in this part:

Accrued expenditures mean the charges incurred by the grantee during a given period requiring the provision of funds for: (1) Goods and other tangible property received; (2) services performed by employees, contractors, subgrantees, subcontractors, and other payees; and (3) other amounts becoming owed under programs for which no current services or performance is required, such as annuities, insurance claims, and other benefit payments.

Accrued income means the sum of: (1) Earnings during a given period from services performed by the grantee and goods and other tangible property delivered to purchasers, and (2) amounts becoming owed to the grantee for which no current services or performance is required by the grantee.

Acquisition cost of an item of purchased equipment means the net invoice unit price of the property including the cost of modifications, attachments, accessories, or auxiliary apparatus necessary to make the property usable for the purpose for which it was acquired. Other charges such as the cost of installation, transportation, taxes, duty or protective in-transit insurance, shall be included or excluded from the unit acquisition cost in accordance with the grantee's regular accounting practices.

Administrative requirements mean those matters common to grants in general, such as financial management,

kinds and frequency of reports, and retention of records. These are distinguished from *programmatic* requirements, which concern matters that can be treated only on a program-by-program or grant-by-grant basis, such as kinds of activities that can be supported by grants under a particular program.

Awarding agency means (1) with respect to a grant, the Federal agency, and (2) with respect to a subgrant, the party that awarded the subgrant.

Cash contributions means the grantee's cash outlay, including the outlay of money contributed to the grantee or subgrantee by other public agencies and institutions, and private organizations and individuals. When authorized by Federal legislation, Federal funds received from other assistance agreements may be considered as grantee or subgrantee cash contributions.

Contract means (except as used in the definitions for *grant* and *subgrant* in this section and except where qualified by *Federal*) a procurement contract under a grant or subgrant, and means a procurement subcontract under a contract.

Cost sharing or matching means the value of the third party in-kind contributions and the portion of the costs of a federally assisted project or program not borne by the Federal Government.

Cost-type contract means a contract or subcontract under a grant in which the contractor or subcontractor is paid on the basis of the costs it incurs, with or without a fee.

Equipment means tangible, nonexpendable, personal property having a useful life of more than one year and an acquisition cost of $5,000 or more per unit. A grantee may use its own definition of equipment provided that such definition would at least include all equipment defined above.

Expenditure report means: (1) For nonconstruction grants, the SF–269 ''Financial Status Report'' (or other equivalent report); (2) for construction grants, the SF–271 ''Outlay Report and Request for Reimbursement'' (or other equivalent report).

Federally recognized Indian tribal government means the governing body or a governmental agency of any Indian tribe, band, nation, or other organized group or community (including any Native village as defined in section 3 of the Alaska Native Claims Settlement Act, 85 Stat 688) certified by the Secretary of the Interior as eligible for the special programs and services provided by him through the Bureau of Indian Affairs.

Government means a State or local government or a federally recognized Indian tribal government.

Grant means an award of financial assistance, including cooperative agreements, in the form of money, or property in lieu of money, by the Federal Government to an eligible grantee. The term does not include technical assistance which provides services instead of money, or other assistance in the form of revenue sharing, loans, loan guarantees, interest subsidies, insurance, or direct appropriations. Also, the term does not include assistance, such as a fellowship or other lump sum award, which the grantee is not required to account for.

Grantee means the government to which a grant is awarded and which is accountable for the use of the funds provided. The grantee is the entire legal entity even if only a particular component of the entity is designated in the grant award document.

Local government means a county, municipality, city, town, township, local public authority (including any public and Indian housing agency under the United States Housing Act of 1937) school district, special district, intrastate district, council of governments (whether or not incorporated as a nonprofit corporation under state law), any other regional or interstate government entity, or any agency or instrumentality of a local government.

Obligations means the amounts of orders placed, contracts and subgrants awarded, goods and services received, and similar transactions during a given period that will require payment by the grantee during the same or a future period.

OMB means the United States Office of Management and Budget.

Outlays (expenditures) mean charges made to the project or program. They may be reported on a cash or accrual basis. For reports prepared on a cash

basis, outlays are the sum of actual cash disbursement for direct charges for goods and services, the amount of indirect expense incurred, the value of in-kind contributions applied, and the amount of cash advances and payments made to contractors and subgrantees. For reports prepared on an accrued expenditure basis, outlays are the sum of actual cash disbursements, the amount of indirect expense incurred, the value of inkind contributions applied, and the new increase (or decrease) in the amounts owed by the grantee for goods and other property received, for services performed by employees, contractors, subgrantees, subcontractors, and other payees, and other amounts becoming owed under programs for which no current services or performance are required, such as annuities, insurance claims, and other benefit payments.

Percentage of completion method refers to a system under which payments are made for construction work according to the percentage of completion of the work, rather than to the grantee's cost incurred.

Prior approval means documentation evidencing consent prior to incurring specific cost.

Real property means land, including land improvements, structures and appurtenances thereto, excluding movable machinery and equipment.

Share, when referring to the awarding agency's portion of real property, equipment or supplies, means the same percentage as the awarding agency's portion of the acquiring party's total costs under the grant to which the acquisition costs under the grant to which the acquisition cost of the property was charged. Only costs are to be counted—not the value of third-party in-kind contributions.

State means any of the several States of the United States, the District of Columbia, the Commonwealth of Puerto Rico, any territory or possession of the United States, or any agency or instrumentality of a State exclusive of local governments. The term does not include any public and Indian housing agency under United States Housing Act of 1937.

Subgrant means an award of financial assistance in the form of money, or property in lieu of money, made under a grant by a grantee to an eligible subgrantee. The term includes financial assistance when provided by contractual legal agreement, but does not include procurement purchases, nor does it include any form of assistance which is excluded from the definition of *grant* in this part.

Subgrantee means the government or other legal entity to which a subgrant is awarded and which is accountable to the grantee for the use of the funds provided.

Supplies means all tangible personal property other than *equipment* as defined in this part.

Suspension means depending on the context, either (1) temporary withdrawal of the authority to obligate grant funds pending corrective action by the grantee or subgrantee or a decision to terminate the grant, or (2) an action taken by a suspending official in accordance with agency regulations implementing E.O. 12549 to immediately exclude a person from participating in grant transactions for a period, pending completion of an investigation and such legal or debarment proceedings as may ensue.

Termination means permanent withdrawal of the authority to obligate previously-awarded grant funds before that authority would otherwise expire. It also means the voluntary relinquishment of that authority by the grantee or subgrantee. *Termination* does not include: (1) Withdrawal of funds awarded on the basis of the grantee's underestimate of the unobligated balance in a prior period; (2) withdrawal of the unobligated balance as of the expiration of a grant; (3) refusal to extend a grant or award additional funds, to make a competing or noncompeting continuation, renewal, extension, or supplemental award; or (4) voiding of a grant upon determination that the award was obtained fraudulently, or was otherwise illegal or invalid from inception.

Terms of a grant or subgrant mean all requirements of the grant or subgrant, whether in statute, regulations, or the award document.

Third party in-kind contributions mean property or services which benefit a federally assisted project or program and which are contributed by non-Federal third parties without charge to the

grantee, or a cost-type contractor under the grant agreement.

Unliquidated obligations for reports prepared on a cash basis mean the amount of obligations incurred by the grantee that has not been paid. For reports prepared on an accrued expenditure basis, they represent the amount of obligations incurred by the grantee for which an outlay has not been recorded.

Unobligated balance means the portion of the funds authorized by the Federal agency that has not been obligated by the grantee and is determined by deducting the cumulative obligations from the cumulative funds authorized.

§ 1207.4 Applicability.

(a) *General.* Subparts A through D of this part apply to all grants and subgrants to governments, except where inconsistent with Federal statutes or with regulations authorized in accordance with the exception provision of § 1207.6, or:

(1) Grants and subgrants to State and local institutions of higher education or State and local hospitals.

(2) The block grants authorized by the Omnibus Budget Reconciliation Act of 1981 (Community Services; Preventive Health and Health Services; Alcohol, Drug Abuse, and Mental Health Services; Maternal and Child Health Services; Social Services; Low-Income Home Energy Assistance; States' Program of Community Development Block Grants for Small Cities; and Elementary and Secondary Education other than programs administered by the Secretary of Education under title V, subtitle D, chapter 2, section 583—the Secretary's discretionary grant program) and titles I–III of the Job Training Partnership Act of 1982 and under the Public Health Services Act (section 1921), Alcohol and Drug Abuse Treatment and Rehabilitation Block Grant and part C of title V, Mental Health Service for the Homeless Block Grant).

(3) Entitlement grants to carry out the following programs of the Social Security Act:

(i) Aid to Needy Families with Dependent Children (title IV–A of the Act, not including the Work Incentive Program (WIN) authorized by section 402(a)19(G); HHS grants for WIN are subject to this part);

(ii) Child Support Enforcement and Establishment of Paternity (title IV–D of the Act);

(iii) Foster Care and Adoption Assistance (title IV–E of the Act);

(iv) Aid to the Aged, Blind, and Disabled (titles I, X, XIV, and XVI–AABD of the Act); and

(v) Medical Assistance (Medicaid) (title XIX of the Act) not including the State Medicaid Fraud Control program authorized by section 1903(a)(6)(B).

(4) Entitlement grants under the following programs of The National School Lunch Act:

(i) School Lunch (section 4 of the Act),

(ii) Commodity Assistance (section 6 of the Act),

(iii) Special Meal Assistance (section 11 of the Act),

(iv) Summer Food Service for Children (section 13 of the Act), and

(v) Child Care Food Program (section 17 of the Act).

(5) Entitlement grants under the following programs of The Child Nutrition Act of 1966:

(i) Special Milk (section 3 of the Act), and

(ii) School Breakfast (section 4 of the Act).

(6) Entitlement grants for State Administrative expenses under The Food Stamp Act of 1977 (section 16 of the Act).

(7) A grant for an experimental, pilot, or demonstration project that is also supported by a grant listed in paragraph (a)(3) of this section;

(8) Grant funds awarded under subsection 412(e) of the Immigration and Nationality Act (8 U.S.C. 1522(e)) and subsection 501(a) of the Refugee Education Assistance Act of 1980 (Pub. L. 96–422, 94 Stat. 1809), for cash assistance, medical assistance, and supplemental security income benefits to refugees and entrants and the administrative costs of providing the assistance and benefits;

(9) Grants to local education agencies under 20 U.S.C. 236 through 241–1(a), and 242 through 244 (portions of the Impact Aid program), except for 20 U.S.C.

238(d)(2)(c) and 240(f) (Entitlement Increase for Handicapped Children); and

(10) Payments under the Veterans Administration's State Home Per Diem Program (38 U.S.C. 641(a)).

(b) *Entitlement programs.* Entitlement programs enumerated above in §1207.4(a) (3) through (8) are subject to subpart E.

§1207.5 Effect on other issuances.

All other grants administration provisions of codified program regulations, program manuals, handbooks and other nonregulatory materials which are inconsistent with this part are superseded, except to the extent they are required by statute, or authorized in accordance with the exception provision in §1207.6.

§1207.6 Additions and exceptions

(a) For classes of grants and grantees subject to this part, Federal agencies may not impose additional administrative requirements except in codified regulations published in the FEDERAL REGISTER.

(b) Exceptions for classes of grants or grantees may be authorized only by OMB.

(c) Exceptions on a case-by-case basis and for subgrantees may be authorized by the affected Federal agencies.

Subpart B—Pre-Award Requirements

§1207.10 Forms for applying for grants.

(a) *Scope.* (1) This section prescribes forms and instructions to be used by governmental organizations (except hospitals and institutions of higher education operated by a government) in applying for grants. This section is not applicable, however, to formula grant programs which do not require applicants to apply for funds on a project basis.

(2) This section applies only to applications to Federal agencies for grants, and is not required to be applied by grantees in dealing with applicants for subgrants. However, grantees are encouraged to avoid more detailed or burdensome application requirements for subgrants.

(b) *Authorized forms and instructions for governmental organizations.* (1) In applying for grants, applicants shall only use standard application forms or those prescribed by the granting agency with the approval of OMB under the Paperwork Reduction Act of 1980.

(2) Applicants are not required to submit more than the original and two copies of preapplications or applications.

(3) Applicants must follow all applicable instructions that bear OMB clearance numbers. Federal agencies may specify and describe the programs, functions, or activities that will be used to plan, budget, and evaluate the work under a grant. Other supplementary instructions may be issued only with the approval of OMB to the extent required under the Paperwork Reduction Act of 1980. For any standard form, except the SF–424 facesheet, Federal agencies may shade out or instruct the applicant to disregard any line item that is not needed.

(4) When a grantee applies for additional funding (such as a continuation or supplemental award) or amends a previously submitted application, only the affected pages need be submitted. Previously submitted pages with information that is still current need not be resubmitted.

§1207.11 State plans.

(a) *Scope.* The statutes for some programs require States to submit plans before receiving grants. Under regulations implementing Executive Order 12372, ''Intergovernmental Review of Federal Programs,'' States are allowed to simplify, consolidate and substitute plans. This section contains additional provisions for plans that are subject to regulations implementing the Executive order.

(b) *Requirements.* A State need meet only Federal administrative or programmatic requirements for a plan that are in statutes or codified regulations.

(c) *Assurances.* In each plan the State will include an assurance that the State shall comply with all applicable Federal statutes and regulations in effect with respect to the periods for which it receives grant funding. For

this assurance and other assurances required in the plan, the State may:

(1) Cite by number the statutory or regulatory provisions requiring the assurances and affirm that it gives the assurances required by those provisions,

(2) Repeat the assurance language in the statutes or regulations, or

(3) Develop its own language to the extent permitted by law.

(d) *Amendments.* A State will amend a plan whenever necessary to reflect: (1) New or revised Federal statutes or regulations or (2) a material change in any State law, organization, policy, or State agency operation. The State will obtain approval for the amendment and its effective date but need submit for approval only the amended portions of the plan.

§ 1207.12 Special grant or subgrant conditions for "high-risk" grantees.

(a) A grantee or subgrantee may be considered ''high risk'' if an awarding agency determines that a grantee or subgrantee:

(1) Has a history of unsatisfactory performance, or

(2) Is not financially stable, or

(3) Has a management system which does not meet the management standards set forth in this part, or

(4) Has not conformed to terms and conditions of previous awards, or

(5) Is otherwise not responsible; and if the awarding agency determines that an award will be made, special conditions and/or restrictions shall correspond to the high risk condition and shall be included in the award.

(b) Special conditions or restrictions may include:

(1) Payment on a reimbursement basis;

(2) Withholding authority to proceed to the next phase until receipt of evidence of acceptable performance within a given funding period;

(3) Requiring additional, more detailed financial reports;

(4) Additional project monitoring;

(5) Requiring the grante or subgrantee to obtain technical or management assistance; or

(6) Establishing additional prior approvals.

(c) If an awarding agency decides to impose such conditions, the awarding official will notify the grantee or subgrantee as early as possible, in writing, of:

(1) The nature of the special conditions/restrictions;

(2) The reason(s) for imposing them;

(3) The corrective actions which must be taken before they will be removed and the time allowed for completing the corrective actions and

(4) The method of requesting reconsideration of the conditions/restrictions imposed.

Subpart C—Post-Award Requirements

FINANCIAL ADMINISTRATION

§ 1207.20 Standards for financial management systems.

(a) A State must expand and account for grant funds in accordance with State laws and procedures for expending and accounting for its own funds. Fiscal control and accounting procedures of the State, as well as its subgrantees and cost-type contractors, must be sufficient to—

(1) Permit preparation of reports required by this part and the statutes authorizing the grant, and

(2) Permit the tracing of funds to a level of expenditures adequate to establish that such funds have not been used in violation of the restrictions and prohibitions of applicable statutes.

(b) The financial management systems of other grantees and subgrantees must meet the following standards:

(1) *Financial reporting.* Accurate, current, and complete disclosure of the financial results of financially assisted activities must be made in accordance with the financial reporting requirements of the grant or subgrant.

(2) *Accounting records.* Grantees and subgrantees must maintain records which adequately identify the source and application of funds provided for financially-assisted activities. These records must contain information pertaining to grant or subgrant awards and authorizations, obligations, unobligated balances, assets, liabilities, outlays or expenditures, and income.

(3) *Internal control.* Effective control and accountability must be maintained for all grant and subgrant cash, real and personal property, and other assets. Grantees and subgrantees must adequately safeguard all such property and must assure that it is used solely for authorized purposes.

(4) *Budget control.* Actual expenditures or outlays must be compared with budgeted amounts for each grant or subgrant. Financial information must be related to performance or productivity data, including the development of unit cost information whenever appropriate or specifically required in the grant or subgrant agreement. If unit cost data are required, estimates based on available documentation will be accepted whenever possible.

(5) *Allowable cost.* Applicable OMB cost principles, agency program regulations, and the terms of grant and subgrant agreements will be followed in determining the reasonableness, allowability, and allocability of costs.

(6) *Source documentation.* Accounting records must be supported by such source documentation as cancelled checks, paid bills, payrolls, time and attendance records, contract and subgrant award documents, etc.

(7) *Cash management.* Procedures for minimizing the time elapsing between the transfer of funds from the U.S. Treasury and disbursement by grantees and subgrantees must be followed whenever advance payment procedures are used. Grantees must establish reasonable procedures to ensure the receipt of reports on subgrantees' cash balances and cash disbursements in sufficient time to enable them to prepare complete and accurate cash transactions reports to the awarding agency. When advances are made by letter-of-credit or electronic transfer of funds methods, the grantee must make drawdowns as close as possible to the time of making disbursements. Grantees must monitor cash drawdowns by their subgrantees to assure that they conform substantially to the same standards of timing and amount as apply to advances to the grantees.

(c) An awarding agency may review the adequacy of the financial management system of any applicant for financial assistance as part of a preaward review or at any time subsequent to award.

§ 1207.21 Payment.

(a) *Scope.* This section prescribes the basic standard and the methods under which a Federal agency will make payments to grantees, and grantees will make payments to subgrantees and contractors.

(b) *Basic standard.* Methods and procedures for payment shall minimize the time elapsing between the transfer of funds and disbursement by the grantee or subgrantee, in accordance with Treasury regulations at 31 CFR part 205.

(c) *Advances.* Grantees and subgrantees shall be paid in advance, provided they maintain or demonstrate the willingness and ability to maintain procedures to minimize the time elapsing between the transfer of the funds and their disbursement by the grantee or subgrantee.

(d) *Reimbursement.* Reimbursement shall be the preferred method when the requirements in paragraph (c) of this section are not met. Grantees and subgrantees may also be paid by reimbursement for any construction grant. Except as otherwise specified in regulation, Federal agencies shall not use the percentage of completion method to pay construction grants. The grantee or subgrantee may use that method to pay its construction contractor, and if it does, the awarding agency's payments to the grantee or subgrantee will be based on the grantee's or subgrantee's actual rate of disbursement.

(e) *Working capital advances.* If a grantee cannot meet the criteria for advance payments described in paragraph (c) of this section, and the Federal agency has determined that reimbursement is not feasible because the grantee lacks sufficient working capital, the awarding agency may provide cash or a working capital advance basis. Under this procedure the awarding agency shall advance cash to the grantee to cover its estimated disbursement needs for an initial period generally geared to the grantee's disbursing cycle. Thereafter, the awarding agency shall reimburse the grantee for its actual cash disbursements. The

working capital advance method of payment shall not be used by grantees or subgrantees if the reason for using such method is the unwillingness or inability of the grantee to provide timely advances to the subgrantee to meet the subgrantee's actual cash disbursements.

(f) *Effect of program income, refunds, and audit recoveries on payment.* (1) Grantees and subgrantees shall disburse repayments to and interest earned on a revolving fund before requesting additional cash payments for the same activity.

(2) Except as provided in paragraph (f)(1) of this section, grantees and subgrantees shall disburse program income, rebates, refunds, contract settlements, audit recoveries and interest earned on such funds before requesting additional cash payments.

(g) *Withholding payments.* (1) Unless otherwise required by Federal statute, awarding agencies shall not withhold payments for proper charges incurred by grantees or subgrantees unless—

(i) The grantee or subgrantee has failed to comply with grant award conditions or

(ii) The grantee or subgrantee is indebted to the United States.

(2) Cash withheld for failure to comply with grant award condition, but without suspension of the grant, shall be released to the grantee upon subsequent compliance. When a grant is suspended, payment adjustments will be made in accordance with § 1207.43(c).

(3) A Federal agency shall not make payment to grantees for amounts that are withheld by grantees or subgrantees from payment to contractors to assure satisfactory completion of work. Payments shall be made by the Federal agency when the grantees or subgrantees actually disburse the withheld funds to the contractors or to escrow accounts established to assure satisfactory completion of work.

(h) *Cash depositories.* (1) Consistent with the national goal of expanding the opportunities for minority business enterprises, grantees and subgrantees are encouraged to use minority banks (a bank which is owned at least 50 percent by minority group members). A list of minority owned banks can be obtained from the Minority Business Development Agency, Department of Commerce, Washington, DC 20230.

(2) A grantee or subgrantee shall maintain a separate bank account only when required by Federal-State agreement.

(i) *Interest earned on advances.* Except for interest earned on advances of funds exempt under the Intergovernmental Cooperation Act (31 U.S.C. 6501 et seq.) and the Indian Self-Determination Act (23 U.S.C. 450), grantees and subgrantees shall promptly, but at least quarterly, remit interest earned on advances to the Federal agency. The grantee or subgrantee may keep interest amounts up to $100 per year for administrative expenses.

§ 1207.22 Allowable costs.

(a) *Limitation on use of funds.* Grant funds may be used only for:

(1) The allowable costs of the grantees, subgrantees and cost-type contractors, including allowable costs in the form of payments to fixed-price contractors; and

(2) Reasonable fees or profit to cost-type contractors but not any fee or profit (or other increment above allowable costs) to the grantee or subgrantee.

(b) *Applicable cost principles.* For each kind of organization, there is a set of Federal principles for determining allowable costs. Allowable costs will be determined in accordance with the cost principles applicable to the organization incurring the costs. The following chart lists the kinds of organizations and the applicable cost principles.

For the costs of a—	Use the principles in—
State, local or Indian tribal government.	OMB Circular A–87.
Private nonprofit organization other than an (1) institution of higher education, (2) hospital, or (3) organization named in OMB Circular A–122 as not subject to that circular.	OMB Circular A–122.
Educational institutions.	OMB Circular A–21.
For-profit organization other than a hospital and an organization named in OBM Circular A–122 as not subject to that circular.	48 CFR part 31. Contract Cost Principles and Procedures, or uniform cost accounting standards that comply with cost principles acceptable to the Federal agency.

§1207.23 Period of availability of funds.

(a) *General.* Where a funding period is specified, a grantee may charge to the award only costs resulting from obligations of the funding period unless carryover of unobligated balances is permitted, in which case the carryover balances may be charged for costs resulting from obligations of the subsequent funding period.

(b) *Liquidation of obligations.* A grantee must liquidate all obligations incurred under the award not later than 90 days after the end of the funding period (or as specified in a program regulation) to coincide with the submission of the annual Financial Status Report (SF–269). The Federal agency may extend this deadline at the request of the grantee.

§1207.24 Matching or cost sharing.

(a) *Basic rule: Costs and contributions acceptable.* With the qualifications and exceptions listed in paragraph (b) of this section, a matching or cost sharing requirement may be satisfied by either or both of the following:

(1) Allowable costs incurred by the grantee, subgrantee or a cost-type contractor under the assistance agreement. This includes allowable costs borne by non-Federal grants or by others cash donations from non-Federal third parties.

(2) The value of third party in-kind contributions applicable to the period to which the cost sharing or matching requirements applies.

(b) *Qualifications and exceptions*—(1) *Costs borne by other Federal grant agreements.* Except as provided by Federal statute, a cost sharing or matching requirement may not be met by costs borne by another Federal grant. This prohibition does not apply to income earned by a grantee or subgrantee from a contract awarded under another Federal grant.

(2) *General revenue sharing.* For the purpose of this section, general revenue sharing funds distributed under 31 U.S.C. 6702 are not considered Federal grant funds.

(3) *Cost or contributions counted towards other Federal costs-sharing requirements.* Neither costs nor the values of third party in-kind contributions may count towards satisfying a cost sharing or matching requirement of a grant agreement if they have been or will be counted towards satisfying a cost sharing or matching requirement of another Federal grant agreement, a Federal procurement contract, or any other award of Federal funds.

(4) *Costs financed by program income.* Costs financed by program income, as defined in §1207.25, shall not count towards satisfying a cost sharing or matching requirement unless they are expressly permitted in the terms of the assistance agreement. (This use of general program income is described in §1207.25(g).)

(5) *Services or property financed by income earned by contractors.* Contractors under a grant may earn income from the activities carried out under the contract in addition to the amounts earned from the party awarding the contract. No costs of services or property supported by this income may count toward satisfying a cost sharing or matching requirement unless other provisions of the grant agreement expressly permit this kind of income to be used to meet the requirement.

(6) *Records.* Costs and third party in-kind contributions counting towards satisfying a cost sharing or matching requirement must be verifiable from the records of grantees and subgrantee or cost-type contractors. These records must show how the value placed on third party in-kind contributions was derived. To the extent feasible, volunteer services will be supported by the same methods that the organization uses to support the allocability of regular personnel costs.

(7) *Special standards for third party in-kind contributions.* (i) Third party in-kind contributions count towards satisfying a cost sharing or matching requirement only where, if the party receiving the contributions were to pay for them, the payments would be allowable costs.

(ii) Some third party in-kind contributions are goods and services that, if the grantee, subgrantee, or contractor receiving the contribution had to pay for them, the payments would have been an indirect costs. Costs sharing or matching credit for such contributions

shall be given only if the grantee, subgrantee, or contractor has established, along with its regular indirect cost rate, a special rate for allocating to individual projects or programs the value of the contributions.

(iii) A third party in-kind contribution to a fixed-price contract may count towards satisfying a cost sharing or matching requirement only if it results in:

(A) An increase in the services or property provided under the contract (without additional cost to the grantee or subgrantee) or

(B) A cost savings to the grantee or subgrantee.

(iv) The values placed on third party in-kind contributions for cost sharing or matching purposes will conform to the rules in the succeeding sections of this part. If a third party in-kind contribution is a type not treated in those sections, the value placed upon it shall be fair and reasonable.

(c) *Valuation of donated services*—(1) *Volunteer services.* Unpaid services provided to a grantee or subgrantee by individuals will be valued at rates consistent with those ordinarily paid for similar work in the grantee's or subgrantee's organization. If the grantee or subgrantee does not have employees performing similar work, the rates will be consistent with those ordinarily paid by other employers for similar work in the same labor market. In either case, a reasonable amount for fringe benefits may be included in the valuation.

(2) *Employees of other organizations.* When an employer other than a grantee, subgrantee, or cost-type contractor furnishes free of charge the services of an employee in the employee's normal line of work, the services will be valued at the employee's regular rate of pay exclusive of the employee's fringe benefits and overhead costs. If the services are in a different line of work, paragraph (c)(1) of this section applies.

(d) *Valuation of third party donated supplies and loaned equipment or space.* (1) If a third party donates supplies, the contribution will be valued at the market value of the supplies at the time of donation.

(2) If a third party donates the use of equipment or space in a building but retains title, the contribution will be valued at the fair rental rate of the equipment or space.

(e) *Valuation of third party donated equipment, buildings, and land.* If a third party donates equipment, buildings, or land, and title passes to a grantee or subgrantee, the treatment of the donated property will depend upon the purpose of the grant or subgrant, as follows:

(1) *Awards for capital expenditures.* If the purpose of the grant or subgrant is to assist the grantee or subgrantee in the acquisition of property, the market value of that property at the time of donation may be counted as cost sharing or matching,

(2) *Other awards.* If assisting in the acquisition of property is not the purpose of the grant or subgrant, paragraphs (e)(2)(i) and (ii) of this section apply:

(i) If approval is obtained from the awarding agency, the market value at the time of donation of the donated equipment or buildings and the fair rental rate of the donated land may be counted as cost sharing or matching. In the case of a subgrant, the terms of the grant agreement may require that the approval be obtained from the Federal agency as well as the grantee. In all cases, the approval may be given only if a purchase of the equipment or rental of the land would be approved as an allowable direct cost. If any part of the donated property was acquired with Federal funds, only the non-federal share of the property may be counted as cost-sharing or matching.

(ii) If approval is not obtained under paragraph (e)(2)(i) of this section, no amount may be counted for donated land, and only depreciation or use allowances may be counted for donated equipment and buildings. The depreciation or use allowances for this property are not treated as third party in-kind contributions. Instead, they are treated as costs incurred by the grantee or subgrantee. They are computed and allocated (usually as indirect costs) in accordance with the cost principles specified in § 1207.22, in the same way as depreciation or use allowances for purchased equipment and buildings. The

amount of depreciation or use allowances for donated equipment and buildings is based on the property's market value at the time it was donated.

(f) *Valuation of grantee or subgrantee donated real property for construction/acquisition.* If a grantee or subgrantee donates real property for a construction or facilities acquisition project, the current market value of that property may be counted as cost sharing or matching. If any part of the donated property was acquired with Federal funds, only the non-federal share of the property may be counted as cost sharing or matching.

(g) *Appraisal of real property.* In some cases under paragraphs (d), (e) and (f) of this section, it will be necessary to establish the market value of land or a building or the fair rental rate of land or of space in a building. In these cases, the Federal agency may require the market value or fair rental value be set by an independent appraiser, and that the value or rate be certified by the grantee. This requirement will also be imposed by the grantee on subgrantees.

§1207.25 Program income.

(a) *General.* Grantees are encouraged to earn income to defray program costs. Program income includes income from fees for services performed, from the use or rental of real or personal property acquired with grant funds, from the sale of commodities or items fabricated under a grant agreement, and from payments of principal and interest on loans made with grant funds. Except as otherwise provided in regulations of the Federal agency, program income does not include interest on grant funds, rebates, credits, discounts, refunds, etc. and interest earned on any of them.

(b) *Definition of program income.* Program income means gross income received by the grantee or subgrantee directly generated by a grant supported activity, or earned only as a result of the grant agreement during the grant period. ''During the grant period'' is the time between the effective date of the award and the ending date of the award reflected in the final financial report.

(c) *Cost of generating program income.* If authorized by Federal regulations or the grant agreement, costs incident to the generation of program income may be deducted from gross income to determine program income.

(d) *Governmental revenues.* Taxes, special assessments, levies, fines, and other such revenues raised by a grantee or subgrantee are not program income unless the revenues are specifically identified in the grant agreement or Federal agency regulations as program income.

(e) *Royalties.* Income from royalties and license fees for copyrighted material, patents, and inventions developed by a grantee or subgrantee is program income only if the revenues are specifically identified in the grant agreement or Federal agency regulations as program income. (See §1207.34.)

(f) *Property.* Proceeds from the sale of real property or equipment will be handled in accordance with the requirements of §§1207.31 and 1207.32.

(g) *Use of program income.* Program income shall be deducted from outlays which may be both Federal and non-Federal as described below, unless the Federal agency regulations or the grant agreement specify another alternative (or a combination of the alternatives). In specifying alternatives, the Federal agency may distinguish between income earned by the grantee and income earned by subgrantees and between the sources, kinds, or amounts of income. When Federal agencies authorize the alternatives in paragraphs (g) (2) and (3) of this section, program income in excess of any limits stipulated shall also be deducted from outlays.

(1) *Deduction.* Ordinarily program income shall be deducted from total allowable costs to determine the net allowable costs. Program income shall be used for current costs unless the Federal agency authorizes otherwise. Program income which the grantee did not anticipate at the time of the award shall be used to reduce the Federal agency and grantee contributions rather than to increase the funds committed to the project.

(2) *Addition.* When authorized, program income may be added to the funds committed to the grant agreement by the Federal agency and the grantee. The program income shall be

used for the purposes and under the conditions of the grant agreement.

(3) *Cost sharing or matching.* When authorized, program income may be used to meet the cost sharing or matching requirement of the grant agreement. The amount of the Federal grant award remains the same.

(h) *Income after the award period.* There are no Federal requirements governing the disposition of program income earned after the end of the award period (i.e., until the ending date of the final financial report, see paragraph (a) of this section), unless the terms of the agreement or the Federal agency regulations provide otherwise.

§ 1207.26 Non-Federal audit.

(a) *Basic rule.* Grantees and subgrantees are responsible for obtaining audits in accordance with the Single Audit Act of 1984 (31 U.S.C. 7501–7507) and Federal agency implementing regulations. The audits shall be made by an independent auditor in accordance with generally accepted government auditing standards covering financial and compliance audits.

(b) *Subgrantees.* State or local governments, as those terms are defined for purposes of the Single Audit Act, that receive Federal financial assistance and provide $25,000 or more of it in a fiscal year to a subgrantee shall:

(1) Determine whether State or local subgrantees have met the audit requirements of the Act and whether subgrantees covered by OMB Circular A–110, ''Uniform Requirements for Grants and Other Agreements with Institutions of Higher Education, Hospitals and Other Nonprofit Organizations'' have met the audit requirement. Commercial contractors (private forprofit and private and governmental organizations) providing goods and services to State and local governments are not required to have a single audit performed. State and local govenments should use their own procedures to ensure that the contractor has complied with laws and regulations affecting the expenditure of Federal funds;

(2) Determine whether the subgrantee spent Federal assistance funds provided in accordance with applicable laws and regulations. This may be accomplished by reviewing an audit of the subgrantee made in accordance with the Act, Circular A–110, or through other means (e.g., program reviews) if the subgrantee has not had such an audit;

(3) Ensure that appropriate corrective action is taken within six months after receipt of the audit report in instance of noncompliance with Federal laws and regulations;

(4) Consider whether subgrantee audits necessitate adjustment of the grantee's own records; and

(5) Require each subgrantee to permit independent auditors to have access to the records and financial statements.

(c) *Auditor selection.* In arranging for audit services, § 1207.36 shall be followed.

CHANGES, PROPERTY, AND SUBAWARDS

§ 1207.30 Changes.

(a) *General.* Grantees and subgrantees are permitted to rebudget within the approved direct cost budget to meet unanticipated requirements and may make limited program changes to the approved project. However, unless waived by the awarding agency, certain types of post-award changes in budgets and projects shall require the prior written approval of the awarding agency.

(b) *Relation to cost principles.* The applicable cost principles (see § 1207.22) contain requirements for prior approval of certain types of costs. Except where waived, those requirements apply to all grants and subgrants even if paragraphs (c) through (f) of this section do not.

(c) *Budget changes*—(1) *Nonconstruction projects.* Except as stated in other regulations or an award document, grantees or subgrantees shall obtain the prior approval of the awarding agency whenever any of the following changes is anticipated under a nonconstruction award:

(i) Any revision which would result in the need for additional funding.

(ii) Unless waived by the awarding agency, cumulative transfers among direct cost categories, or, if applicable, among separately budgeted programs, projects, functions, or activities which exceed or are expected to exceed ten percent of the current total approved

budget, whenever the awarding agency's share exceeds $100,000.

(iii) Transfer of funds allotted for training allowances (i.e., from direct payments to trainees to other expense categories).

(2) *Construction projects.* Grantees and subgrantees shall obtain prior written approval for any budget revision which would result in the need for additional funds.

(3) *Combined construction and nonconstruction projects.* When a grant or subgrant provides funding for both construction and nonconstruction activities, the grantee or subgrantee must obtain prior written approval from the awarding agency before making any fund or budget transfer from nonconstruction to construction or vice versa.

(d) *Programmatic changes.* Grantees or subgrantees must obtain the prior approval of the awarding agency whenever any of the following actions is anticipated:

(1) Any revision of the scope or objectives of the project (regardless of whether there is an associated budget revision requiring prior approval).

(2) Need to extend the period of availability of funds.

(3) Changes in key persons in cases where specified in an application or a grant award. In research projects, a change in the project director or principal investigator shall always require approval unless waived by the awarding agency.

(4) Under nonconstruction projects, contracting out, subgranting (if authorized by law) or otherwise obtaining the services of a third party to perform activities which are central to the purposes of the award. This approval requirement is in addition to the approval requirements of § 1207.36 but does not apply to the procurement of equipment, supplies, and general support services.

(e) *Additional prior approval requirements.* The awarding agency may not require prior approval for any budget revision which is not described in paragraph (c) of this section.

(f) *Requesting prior approval.* (1) A request for prior approval of any budget revision will be in the same budget formal the grantee used in its application and shall be accompanied by a narrative justification for the proposed revision.

(2) A request for a prior approval under the applicable Federal cost principles (see § 1207.22) may be made by letter.

(3) A request by a subgrantee for prior approval will be addressed in writing to the grantee. The grantee will promptly review such request and shall approve or disapprove the request in writing. A grantee will not approve any budget or project revision which is inconsistent with the purpose or terms and conditions of the Federal grant to the grantee. If the revision, requested by the subgrantee would result in a change to the grantee's approved project which requires Federal prior approval, the grantee will obtain the Federal agency's approval before approving the subgrantee's request.

§ 1207.31 Real property.

(a) *Title.* Subject to the obligations and conditions set forth in this section, title to real property acquired under a grant or subgrant will vest upon acquisition in the grantee or subgrantee respectively.

(b) *Use.* Except as otherwise provided by Federal statutes, real property will be used for the originally authorized purposes as long as needed for that purposes, and the grantee or subgrantee shall not dispose of or encumber its title or other interests.

(c) *Disposition.* When real property is no longer needed for the originally authorized purpose, the grantee or subgrantee will request disposition instructions from the awarding agency. The instructions will provide for one of the following alternatives:

(1) *Retention of title.* Retain title after compensating the awarding agency. The amount paid to the awarding agency will be computed by applying the awarding agency's percentage of participation in the cost of the original purchase to the fair market value of the property. However, in those situations where a grantee or subgrantee is disposing of real property acquired

with grant funds and acquiring replacement real property under the same program, the net proceeds from the disposition may be used as an offset to the cost of the replacement property.

(2) *Sale of property.* Sell the property and compensate the awarding agency. The amount due to the awarding agency will be calculated by applying the awarding agency's percentage of participation in the cost of the original purchase to the proceeds of the sale after deduction of any actual and reasonable selling and fixing-up expenses. If the grant is still active, the net proceeds from sale may be offset against the original cost of the property. When a grantee or subgrantee is directed to sell property, sales procedures shall be followed that provide for competition to the extent practicable and result in the highest possible return.

(3) *Transfer of title.* Transfer title to the awarding agency or to a third-party designated/approved by the awarding agency. The grantee or subgrantee shall be paid an amount calculated by applying the grantee or subgrantee's percentage of participation in the purchase of the real property to the current fair market value of the property.

§ 1207.32 Equipment.

(a) *Title.* Subject to the obligations and conditions set forth in this section, title to equipment acquired under a grant or subgrant will vest upon acquisition in the grantee or subgrantee respectively.

(b) *States.* A State will use, manage, and dispose of equipment acquired under a grant by the State in accordance with State laws and procedures. Other grantees and subgrantees will follow paragraphs (c) through (e) of this section.

(c) *Use.* (1) Equipment shall be used by the grantee or subgrantee in the program or project for which it was acquired as long as needed, whether or not the project or program continues to be supported by Federal funds. When no longer needed for the original program or project, the equipment may be used in other activities currently or previously supported by a Federal agency.

(2) The grantee or subgrantee shall also make equipment available for use on other projects or programs currently or previously supported by the Federal Government, providing such use will not interfere with the work on the projects or program for which it was originally acquired. First preference for other use shall be given to other programs or projects supported by the awarding agency. User fees should be considered if appropriate.

(3) Notwithstanding the encouragement in § 1207.25(a) to earn program income, the grantee or subgrantee must not use equipment acquired with grant funds to provide services for a fee to compete unfairly with private companies that provide equivalent services, unless specifically permitted or contemplated by Federal statute.

(4) When acquiring replacement equipment, the grantee or subgrantee may use the equipment to be replaced as a trade-in or sell the property and use the proceeds to offset the cost of the replacement property, subject to the approval of the awarding agency.

(d) *Management requirements.* Procedures for managing equipment (including replacement equipment), whether acquired in whole or in part with grant funds, until disposition takes place will, as a minimum, meet the following requirements:

(1) Property records must be maintained that include a description of the property, a serial number or other identification number, the source of property, who holds title, the acquisition date, and cost of the property, percentage of Federal participation in the cost of the property, the location, use and condition of the property, and any ultimate disposition data including the date of disposal and sale price of the property.

(2) A physical inventory of the property must be taken and the results reconciled with the property records at least once every two years.

(3) A control system must be developed to ensure adequate safeguards to prevent loss, damage, or theft of the property. Any loss, damage, or theft shall be investigated.

(4) Adequate maintenance procedures must be developed to keep the property in good condition.

(5) If the grantee or subgrantee is authorized or required to sell the property, proper sales procedures must be established to ensure the highest possible return.

(e) *Disposition.* When original or replacement equipment acquired under a grant or subgrant is no longer needed for the original project or program or for other activities currently or previously supported by a Federal agency, disposition of the equipment will be made as follows:

(1) Items of equipment with a current per-unit fair market value of less than $5,000 may be retained, sold or otherwise disposed of with no further obligation to the awarding agency.

(2) Items of equipment with a current per unit fair market value in excess of $5,000 may be retained or sold and the awarding agency shall have a right to an amount calculated by multiplying the current market value or proceeds from sale by the awarding agency's share of the equipment.

(3) In cases where a grantee or subgrantee fails to take appropriate disposition actions, the awarding agency may direct the grantee or subgrantee to take excess and disposition actions.

(f) *Federal equipment.* In the event a grantee or subgrantee is provided federally-owned equipment:

(1) Title will remain vested in the Federal Government.

(2) Grantees or subgrantees will manage the equipment in accordance with Federal agency rules and procedures, and submit an annual inventory listing.

(3) When the equipment is no longer needed, the grantee or subgrantee will request disposition instructions from the Federal agency.

(g) *Right to transfer title.* The Federal awarding agency may reserve the right to transfer title to the Federal Government or a third part named by the awarding agency when such a third party is otherwise eligible under existing statutes. Such transfers shall be subject to the following standards:

(1) The property shall be identified in the grant or otherwise made known to the grantee in writing.

(2) The Federal awarding agency shall issue disposition instruction within 120 calendar days after the end of the Federal support of the project for which it was acquired. If the Federal awarding agency fails to issue disposition instructions within the 120 calendar-day period the grantee shall follow §1207.32(e).

(3) When title to equipment is transferred, the grantee shall be paid an amount calculated by applying the percentage of participation in the purchase to the current fair market value of the property.

§1207.33 Supplies.

(a) *Title.* Title to supplies acquired under a grant or subgrant will vest, upon acquisition, in the grantee or subgrantee respectively.

(b) *Disposition.* If there is a residual inventory of unused supplies exceeding $5,000 in total aggregate fair market value upon termination or completion of the award, and if the supplies are not needed for any other federally sponsored programs or projects, the grantee or subgrantee shall compensate the awarding agency for its share.

§1207.34 Copyrights.

The Federal awarding agency reserves a royalty-free, nonexclusive, and irrevocable license to reproduce, publish or otherwise use, and to authorize others to use, for Federal Government purposes:

(a) The copyright in any work developed under a grant, subgrant, or contract under a grant or subgrant; and

(b) Any rights of copyright to which a grantee, subgrantee or a contractor purchases ownership with grant support.

§1207.35 Subawards to debarred and suspended parties.

Grantees and subgrantees must not make any award or permit any award (subgrant or contract) at any tier to any party which is debarred or suspended or is otherwise excluded from or ineligible for participation in Federal assistance programs under Executive Order 12549, ''Debarment and Suspension.''

§1207.36 Procurement.

(a) *States.* When procuring property and services under a grant, a State will

follow the same policies and procedures it uses for procurements from its non-Federal funds. The State will ensure that every purchase order or other contract includes any clauses required by Federal statutes and executive orders and their implementing regulations. Other grantees and subgrantees will follow paragraphs (b) through (i) in this section.

(b) *Procurement standards.* (1) Grantees and subgrantees will use their own procurement procedures which reflect applicable State and local laws and regulations, provided that the procurements conform to applicable Federal law and the standards identified in this section.

(2) Grantees and subgrantees will maintain a contract administration system which ensures that contractors perform in accordance with the terms, conditions, and specifications of their contracts or purchase orders.

(3) Grantees and subgrantees will maintain a written code of standards of conduct governing the performance of their employees engaged in the award and administration of contracts. No employee, officer or agent of the grantee or subgrantee shall participate in selection, or in the award or administration of a contract supported by Federal funds if a conflict of interest, real or apparent, would be involved. Such a conflict would arise when:

(i) The employee, officer or agent,

(ii) Any member of his immediate family,

(iii) His or her partner, or

(iv) An organization which employs, or is about to employ, any of the above, has a financial or other interest in the firm selected for award. The grantee's or subgrantee's officers, employees or agents will neither solicit nor accept gratuities, favors or anything of monetary value from contractors, potential contractors, or parties to subagreements. Grantee and subgrantees may set minimum rules where the financial interest is not substantial or the gift is an unsolicited item of nominal intrinsic value. To the extent permitted by State or local law or regulations, such standards or conduct will provide for penalties, sanctions, or other disciplinary actions for violations of such standards by the grantee's and subgrantee's officers, employees, or agents, or by contractors or their agents. The awarding agency may in regulation provide additional prohibitions relative to real, apparent, or potential conflicts of interest.

(4) Grantee and subgrantee procedures will provide for a review of proposed procurements to avoid purchase of unnecessary or duplicative items. Consideration should be given to consolidating or breaking out procurements to obtain a more economical purchase. Where appropriate, an analysis will be made of lease versus purchase alternatives, and any other appropriate analysis to determine the most economical approach.

(5) To foster greater economy and efficiency, grantees and subgrantees are encouraged to enter into State and local intergovernmental agreements for procurement or use of common goods and services.

(6) Grantees and subgrantees are encouraged to use Federal excess and surplus property in lieu of purchasing new equipment and property whenever such use is feasible and reduces project costs.

(7) Grantees and subgrantees are encouraged to use value engineering clauses in contracts for construction projects of sufficient size to offer reasonable opportunities for cost reductions. Value engineering is a systematic and creative anaylsis of each contract item or task to ensure that its essential function is provided at the overall lower cost.

(8) Grantees and subgrantees will make awards only to responsible contractors possessing the ability to perform successfully under the terms and conditions of a proposed procurement. Consideration will be given to such matters as contractor integrity, compliance with public policy, record of past performance, and financial and technical resources.

(9) Grantees and subgrantees will maintain records sufficient to detail the significant history of a procurement. These records will include, but are not necessarily limited to the following: rationale for the method of procurement, selection of contract type, contractor selection or rejection, and the basis for the contract price.

(10) Grantees and subgrantees will use time and material type contracts only—

(i) After a determination that no other contract is suitable, and

(ii) If the contract includes a ceiling price that the contractor exceeds at its own risk.

(11) Grantees and subgrantees alone will be responsible, in accordance with good administrative practice and sound business judgment, for the settlement of all contractual and administrative issues arising out of procurements. These issues include, but are not limited to source evaluation, protests, disputes, and claims. These standards do not relieve the grantee or subgrantee of any contractual responsibilities under its contracts. Federal agencies will not substitute their judgment for that of the grantee or subgrantee unless the matter is primarily a Federal concern. Violations of law will be referred to the local, State, or Federal authority having proper jurisdiction.

(12) Grantees and subgrantees will have protest procedures to handle and resolve disputes relating to their procurements and shall in all instances disclose information regarding the protest to the awarding agency. A protestor must exhaust all administrative remedies with the grantee and subgrantee before pursuing a protest with the Federal agency. Reviews of protests by the Federal agency will be limited to:

(i) Violations of Federal law or regulations and the standards of this section (violations of State or local law will be under the jurisdiction of State or local authorities) and

(ii) Violations of the grantee's or subgrantee's protest procedures for failure to review a complaint or protest. Protests received by the Federal agency other than those specified above will be referred to the grantee or subgrantee.

(c) *Competition*. (1) All procurement transactions will be conducted in a manner providing full and open competition consistent with the standards of § 1207.36. Some of the situations considered to be restrictive of competition include but are not limited to:

(i) Placing unreasonable requirements on firms in order for them to qualify to do business,

(ii) Requiring unnecessary experience and excessive bonding,

(iii) Noncompetitive pricing practices between firms or between affiliated companies,

(iv) Noncompetitive awards to consultants that are on retainer contracts,

(v) Organizational conflicts of interest,

(vi) Specifying only a ''brand name'' product instead of allowing ''an equal'' product to be offered and describing the performance of other relevant requirements of the procurement, and

(vii) Any arbitrary action in the procurement process.

(2) Grantees and subgrantees will conduct procurements in a manner that prohibits the use of statutorily or administratively imposed in-State or local geographical preferences in the evaluation of bids or proposals, except in those cases where applicable Federal statutes expressly mandate or encourage geographic preference. Nothing in this section preempts State licensing laws. When contracting for architectural and engineering (A/E) services, geographic location may be a selection criteria provided its application leaves an appropriate number of qualified firms, given the nature and size of the project, to compete for the contract.

(3) Grantees will have written selection procedures for procurement transactions. These procedures will ensure that all solicitations:

(i) Incorporate a clear and accurate description of the technical requirements for the material, product, or service to be procured. Such description shall not, in competitive procurements, contain features which unduly restrict competition. The description may include a statement of the qualitative nature of the material, product or service to be procured, and when necessary, shall set forth those minimum essential characteristics and standards to which it must conform if it is to satisfy its intended use. Detailed product specifications should be avoided if at all possible. When it is impractical or uneconomical to make a clear and accurate description of the technical requirements, a ''brand name or equal'' description may be used as a means to define the performance or

other salient requirements of a procurement. The specific features of the named brand which must be met by offerors shall be clearly stated; and

(ii) Identify all requirements which the offerors must fulfill and all other factors to be used in evaluating bids or proposals.

(4) Grantees and subgrantees will ensure that all prequalified lists of persons, firms, or products which are used in acquiring goods and services are current and include enough qualified sources to ensure maximum open and free competition. Also, grantees and subgrantees will not preclude potential bidders from qualifying during the solicitation period.

(d) *Methods of procurement to be followed*—(1) *Procurement by small purchase procedures.* Small purchase procedures are those relatively simple and informal procurement methods for securing services, supplies, or other property that do not cost more than the simplified acquisition threshold fixed at 41 U.S.C. 403(11) (currently set at $100,000). If small purchase procedures are used, price or rate quotations shall be obtained from an adequate number of qualified sources.

(2) Procurement by *sealed bids* (formal advertising). Bids are publicly solicited and a firm-fixed-price contract (lump sum or unit price) is awarded to the responsible bidder whose bid, conforming with all the material terms and conditions of the invitation for bids, is the lowest in price. The sealed bid method is the preferred method for procuring construction, if the conditions in § 1207.36(d)(2)(i) apply.

(i) In order for sealed bidding to be feasible, the following conditions should be present:

(A) A complete, adequate, and realistic specification or purchase description is available;

(B) Two or more responsible bidders are willing and able to compete effectively and for the business; and

(C) The procurement lends itself to a firm fixed price contract and the selection of the successful bidder can be made principally on the basis of price.

(ii) If sealed bids are used, the following requirements apply:

(A) The invitation for bids will be publicly advertised and bids shall be solicited from an adequate number of known suppliers, providing them sufficient time prior to the date set for opening the bids;

(B) The invitation for bids, which will include any specifications and pertinent attachments, shall define the items or services in order for the bidder to properly respond;

(C) All bids will be publicly opened at the time and place prescribed in the invitation for bids;

(D) A firm fixed-price contract award will be made in writing to the lowest responsive and responsible bidder. Where specified in bidding documents, factors such as discounts, transportation cost, and life cycle costs shall be considered in determining which bid is lowest. Payment discounts will only be used to determine the low bid when prior experience indicates that such discounts are usually taken advantage of; and

(E) Any or all bids may be rejected if there is a sound documented reason.

(3) Procurement by *competitive proposals.* The technique of competitive proposals is normally conducted with more than one source submitting an offer, and either a fixed-price or cost-reimbursement type contract is awarded. It is generally used when conditions are not appropriate for the use of sealed bids. If this method is used, the following requirements apply:

(i) Requests for proposals will be publicized and identify all evaluation factors and their relative importance. Any response to publicized requests for proposals shall be honored to the maximum extent practical;

(ii) Proposals will be solicited from an adequate number of qualified sources;

(iii) Grantees and subgrantees will have a method for conducting technical evaluations of the proposals received and for selecting awardees;

(iv) Awards will be made to the responsible firm whose proposal is most advantageous to the program, with price and other factors considered; and

(v) Grantees and subgrantees may use competitive proposal procedures for qualifications-based procurement of architectural/engineering (A/E) professional services whereby competitors' qualifications are evaluated and the

most qualified competitor is selected, subject to negotiation of fair and reasonable compensation. The method, where price is not used as a selection factor, can only be used in procurement of A/E professional services. It cannot be used to purchase other types of services though A/E firms are a potential source to perform the proposed effort.

(4) Procurement by *noncompetitive proposals* is procurement through solicitation of a proposal from only one source, or after solicitation of a number of sources, competition is determined inadequate.

(i) Procurement by noncompetitive proposals may be used only when the award of a contract is infeasible under small purchase procedures, sealed bids or competitive proposals and one of the following circumstances applies:

(A) The item is available only from a single source;

(B) The public exigency or emergency for the requirement will not permit a delay resulting from competitive solicitation;

(C) The awarding agency authorizes noncompetitive proposals; or

(D) After solicitation of a number of sources, competition is determined inadequate.

(ii) Cost analysis, i.e., verifying the proposed cost data, the projections of the data, and the evaluation of the specific elements of costs and profits, is required.

(iii) Grantees and subgrantees may be required to submit the proposed procurement to the awarding agency for pre-award review in accordance with paragraph (g) of this section.

(e) *Contracting with small and minority firms, women's business enterprise and labor surplus area firms.* (1) The grantee and subgrantee will take all necessary affirmative steps to assure that minority firms, women's business enterprises, and labor surplus area firms are used when possible.

(2) Affirmative steps shall include:

(i) Placing qualified small and minority businesses and women's business enterprises on solicitation lists;

(ii) Assuring that small and minority businesses, and women's business enterprises are solicited whenever they are potential sources;

(iii) Dividing total requirements, when economically feasible, into smaller tasks or quantities to permit maximum participation by small and minority business, and women's business enterprises;

(iv) Establishing delivery schedules, where the requirement permits, which encourage participation by small and minority business, and women's business enterprises;

(v) Using the services and assistance of the Small Business Administration, and the Minority Business Development Agency of the Department of Commerce; and

(vi) Requiring the prime contractor, if subcontracts are to be let, to take the affirmative steps listed in paragraphs (e)(2)(i) through (v) of this section.

(f) *Contract cost and price.* (1) Grantees and subgrantees must perform a cost or price analysis in connection with every procurement action including contract modifications. The method and degree of analysis is dependent on the facts surrounding the particular procurement situation, but as a starting point, grantees must make independent estimates before receiving bids or proposals. A cost analysis must be performed when the offeror is required to submit the elements of his estimated cost, e.g., under professional, consulting, and architectural engineering services contracts. A cost analysis will be necessary when adequate price competition is lacking, and for sole source procurements, including contract modifications or change orders, unless price resonableness can be established on the basis of a catalog or market price of a commercial product sold in substantial quantities to the general public or based on prices set by law or regulation. A price analysis will be used in all other instances to determine the reasonableness of the proposed contract price.

(2) Grantees and subgrantees will negotiate profit as a separate element of the price for each contract in which there is no price competition and in all cases where cost analysis is performed. To establish a fair and reasonable profit, consideration will be given to the

complexity of the work to be performed, the risk borne by the contractor, the contractor's investment, the amount of subcontracting, the quality of its record of past performance, and industry profit rates in the surrounding geographical area for similar work.

(3) Costs or prices based on estimated costs for contracts under grants will be allowable only to the extent that costs incurred or cost estimates included in negotiated prices are consistent with Federal cost principles (see § 1207.22). Grantees may reference their own cost principles that comply with the applicable Federal cost principles.

(4) The cost plus a percentage of cost and percentage of construction cost methods of contracting shall not be used.

(g) *Awarding agency review.* (1) Grantees and subgrantees must make available, upon request of the awarding agency, technical specifications on proposed procurements where the awarding agency believes such review is needed to ensure that the item and/or service specified is the one being proposed for purchase. This review generally will take place prior to the time the specification is incorporated into a solicitation document. However, if the grantee or subgrantee desires to have the review accomplished after a solicitation has been developed, the awarding agency may still review the specifications, with such review usually limited to the technical aspects of the proposed purchase.

(2) Grantees and subgrantees must on request make available for awarding agency pre-award review procurement documents, such as requests for proposals or invitations for bids, independent cost estimates, etc. when:

(i) A grantee's or subgrantee's procurement procedures or operation fails to comply with the procurement standards in this section; or

(ii) The procurement is expected to exceed the simplified acquisition threshold and is to be awarded without competition or only one bid or offer is received in response to a solicitation; or

(iii) The procurement, which is expected to exceed the simplified acquisition threshold, specifies a ''brand name'' product; or

(iv) The proposed award is more than the simplified acquisition threshold and is to be awarded to other than the apparent low bidder under a sealed bid procurement; or

(v) A proposed contract modification changes the scope of a contract or increases the contract amount by more than the simplified acquisition threshold.

(3) A grantee or subgrantee will be exempt from the pre-award review in paragraph (g)(2) of this section if the awarding agency determines that its procurement systems comply with the standards of this section.

(i) A grantee or subgrantee may request that its procurement system be reviewed by the awarding agency to determine whether its system meets these standards in order for its system to be certified. Generally, these reviews shall occur where there is a continuous high-dollar funding, and third-party contracts are awarded on a regular basis.

(ii) A grantee or subgrantee may self-certify its procurement system. Such self-certification shall not limit the awarding agency's right to survey the system. Under a self-certification procedure, awarding agencies may wish to rely on written assurances from the grantee or subgrantee that it is complying with these standards. A grantee or subgrantee will cite specific procedures, regulations, standards, etc., as being in compliance with these requirements and have its system available for review.

(h) *Bonding requirements.* For construction or facility improvement contracts or subcontracts exceeding the simplified acquisition threshold, the awarding agency may accept the bonding policy and requirements of the grantee or subgrantee provided the awarding agency has made a determination that the awarding agency's interest is adequately protected. If such a determination has not been made, the minimum requirements shall be as follows:

(1) *A bid guarantee from each bidder equivalent to five percent of the bid price.* The ''bid guarantee'' shall consist of a firm commitment such as a bid bond,

certified check, or other negotiable instrument accompanying a bid as assurance that the bidder will, upon acceptance of his bid, execute such contractual documents as may be required within the time specified.

(2) *A performance bond on the part of the contractor for 100 percent of the contract price.* A ''performance bond'' is one executed in connection with a contract to secure fulfillment of all the contractor's obligations under such contract.

(3) *A payment bond on the part of the contractor for 100 percent of the contract price.* A ''payment bond'' is one executed in connection with a contract to assure payment as required by law of all persons supplying labor and material in the execution of the work provided for in the contract.

(i) *Contract provisions.* A grantee's and subgrantee's contracts must contain provisions in paragraph (i) of this section. Federal agencies are permitted to require changes, remedies, changed conditions, access and records retention, suspension of work, and other clauses approved by the Office of Federal Procurement Policy.

(1) Administrative, contractual, or legal remedies in instances where contractors violate or breach contract terms, and provide for such sanctions and penalties as may be appropriate. (Contracts more than the simplified acquisition threshold)

(2) Termination for cause and for convenience by the grantee or subgrantee including the manner by which it will be effected and the basis for settlement. (All contracts in excess of $10,000)

(3) Compliance with Executive Order 11246 of September 24, 1965, entitled ''Equal Employment Opportunity,'' as amended by Executive Order 11375 of October 13, 1967, and as supplemented in Department of Labor regulations (41 CFR chapter 60). (All construction contracts awarded in excess of $10,000 by grantees and their contractors or subgrantees)

(4) Compliance with the Copeland ''Anti-Kickback'' Act (18 U.S.C. 874) as supplemented in Department of Labor regulations (29 CFR Part 3). (All contracts and subgrants for construction or repair)

(5) Compliance with the Davis-Bacon Act (40 U.S.C. 276a to 276a–7) as supplemented by Department of Labor regulations (29 CFR Part 5). (Construction contracts in excess of $2000 awarded by grantees and subgrantees when required by Federal grant program legislation)

(6) Compliance with Sections 103 and 107 of the Contract Work Hours and Safety Standards Act (40 U.S.C. 327–330) as supplemented by Department of Labor regulations (29 CFR Part 5). (Construction contracts awarded by grantees and subgrantees in excess of $2000, and in excess of $2500 for other contracts which involve the employment of mechanics or laborers)

(7) Notice of awarding agency requirements and regulations pertaining to reporting.

(8) Notice of awarding agency requirements and regulations pertaining to patent rights with respect to any discovery or invention which arises or is developed in the course of or under such contract.

(9) Awarding agency requirements and regulations pertaining to copyrights and rights in data.

(10) Access by the grantee, the subgrantee, the Federal grantor agency, the Comptroller General of the United States, or any of their duly authorized representatives to any books, documents, papers, and records of the contractor which are directly pertinent to that specific contract for the purpose of making audit, examination, excerpts, and transcriptions.

(11) Retention of all required records for three years after grantees or subgrantees make final payments and all other pending matters are closed.

(12) Compliance with all applicable standards, orders, or requirements issued under section 306 of the Clean Air Act (42 U.S.C. 1857(h)), section 508 of the Clean Water Act (33 U.S.C. 1368), Executive Order 11738, and Environmental Protection Agency regulations (40 CFR part 15). (Contracts, subcontracts, and subgrants of amounts in excess of $100,000)

(13) Mandatory standards and policies relating to energy efficiency which are contained in the state energy conservation plan issued in compliance with the

Energy Policy and Conservation Act (Pub. L. 94–163, 89 Stat. 871).

[53 FR 8072, Mar. 11, 1988, as amended at 60 FR 19639, 19643, Apr. 19, 1995]

§ 1207.37 Subgrants.

(a) *States.* States shall follow state law and procedures when awarding and administering subgrants (whether on a cost reimbursement or fixed amount basis) of financial assistance to local and Indian tribal governments. States shall:

(1) Ensure that every subgrant includes any clauses required by Federal statute and executive orders and their implementing regulations;

(2) Ensure that subgrantees are aware of requirements imposed upon them by Federal statute and regulation;

(3) Ensure that a provision for compliance with § 1207.42 is placed in every cost reimbursement subgrant; and

(4) Conform any advances of grant funds to subgrantees substantially to the same standards of timing and amount that apply to cash advances by Federal agencies.

(b) *All other grantees.* All other grantees shall follow the provisions of this part which are applicable to awarding agencies when awarding and administering subgrants (whether on a cost reimbursement or fixed amount basis) of financial assistance to local and Indian tribal governments. Grantees shall:

(1) Ensure that every subgrant includes a provision for compliance with this part;

(2) Ensure that every subgrant includes any clauses required by Federal statute and executive orders and their implementing regulations; and

(3) Ensure that subgrantees are aware of requirements imposed upon them by Federal statutes and regulations.

(c) *Exceptions.* By their own terms, certain provisions of this part do not apply to the award and administration of subgrants:

(1) Section 1207.10;

(2) Section 1207.11;

(3) The letter-of-credit procedures specified in Treasury Regulations at 31 CFR part 205, cited in § 1207.21; and

(4) Section 1207.50.

REPORTS, RECORDS, RETENTION, AND ENFORCEMENT

§ 1207.40 Monitoring and reporting program performance.

(a) *Monitoring by grantees.* Grantees are responsible for managing the day-to-day operations of grant and subgrant supported activities. Grantees must monitor grant and subgrant supported activities to assure compliance with applicable Federal requirements and that performance goals are being achieved. Grantee monitoring must cover each program, function or activity.

(b) *Nonconstruction performance reports.* The Federal agency may, if it decides that performance information available from subsequent applications contains sufficient information to meet its programmatic needs, require the grantee to submit a performance report only upon expiration or termination of grant support. Unless waived by the Federal agency this report will be due on the same date as the final Financial Status Report.

(1) Grantees shall submit annual performance reports unless the awarding agency requires quarterly or semi-annual reports. However, performance reports will not be required more frequently than quarterly. Annual reports shall be due 90 days after the grant year, quarterly or semi-annual reports shall be due 30 days after the reporting period. The final performance report will be due 90 days after the expiration or termination of grant support. If a justified request is submitted by a grantee, the Federal agency may extend the due date for any performance report. Additionally, requirements for unnecessary performance reports may be waived by the Federal agency.

(2) Performance reports will contain, for each grant, brief information on the following:

(i) A comparison of actual accomplishments to the objectives established for the period. Where the output of the project can be quantified, a computation of the cost per unit of output may be required if that information will be useful.

(ii) The reasons for slippage if established objectives were not met.

(iii) Additional pertinent information including, when appropriate, analysis and explanation of cost overruns or high unit costs.

(3) Grantees will not be required to submit more than the original and two copies of performance reports.

(4) Grantees will adhere to the standards in this section in prescribing performance reporting requirements for subgrantees.

(c) *Construction performance reports.* For the most part, on-site technical inspections and certified percentage-of-completion data are relied on heavily by Federal agencies to monitor progress under construction grants and subgrants. The Federal agency will require additional formal performance reports only when considered necessary, and never more frequently than quarterly.

(d) *Significant developments.* Events may occur between the scheduled performance reporting dates which have significant impact upon the grant or subgrant supported activity. In such cases, the grantee must inform the Federal agency as soon as the following types of conditions become known:

(1) Problems, delays, or adverse conditions which will materially impair the ability to meet the objective of the award. This disclosure must include a statement of the action taken, or contemplated, and any assistance needed to resolve the situation.

(2) Favorable developments which enable meeting time schedules and objectives sooner or at less cost than anticipated or producing more beneficial results than originally planned.

(e) Federal agencies may make site visits as warranted by program needs.

(f) *Waivers, extensions.* (1) Federal agencies may waive any performance report required by this part if not needed.

(2) The grantee may waive any performance report from a subgrantee when not needed. The grantee may extend the due date for any performance report from a subgrantee if the grantee will still be able to meet its performance reporting obligations to the Federal agency.

§ 1207.41 Financial reporting.

(a) *General.* (1) Except as provided in paragraphs (a)(2) and (5) of this section, grantees will use only the forms specified in paragraphs (a) through (e) of this section, and such supplementary or other forms as may from time to time be authorized by OMB, for:

(i) Submitting financial reports to Federal agencies, or

(ii) Requesting advances or reimbursements when letters of credit are not used.

(2) Grantees need not apply the forms prescribed in this section in dealing with their subgrantees. However, grantees shall not impose more burdensome requirements on subgrantees.

(3) Grantees shall follow all applicable standard and supplemental Federal agency instructions approved by OMB to the extend required under the Paperwork Reduction Act of 1980 for use in connection with forms specified in paragraphs (b) through (e) of this section. Federal agencies may issue substantive supplementary instructions only with the approval of OMB. Federal agencies may shade out or instruct the grantee to disregard any line item that the Federal agency finds unnecessary for its decisionmaking purposes.

(4) Grantees will not be required to submit more than the original and two copies of forms required under this part.

(5) Federal agencies may provide computer outputs to grantees to expedite or contribute to the accuracy of reporting. Federal agencies may accept the required information from grantees in machine usable format or computer printouts instead of prescribed forms.

(6) Federal agencies may waive any report required by this section if not needed.

(7) Federal agencies may extend the due date of any financial report upon receiving a justified request from a grantee.

(b) *Financial Status Report*—(1) *Form.* Grantees will use Standard Form 269 or 269A, Financial Status Report, to report the status of funds for all nonconstruction grants and for construction grants when required in accordance with § 1207.41(e)(2)(iii).

(2) *Accounting basis.* Each grantee will report program outlays and program

income on a cash or accrual basis as prescribed by the awarding agency. If the Federal agency requires accrual information and the grantee's accounting records are not normally kept on the accural basis, the grantee shall not be required to convert its accounting system but shall develop such accrual information through and analysis of the documentation on hand.

(3) *Frequency.* The Federal agency may prescribe the frequency of the report for each project or program. However, the report will not be required more frequently than quarterly. If the Federal agency does not specify the frequency of the report, it will be submitted annually. A final report will be required upon expiration or termination of grant support.

(4) *Due date.* When reports are required on a quarterly or semiannual basis, they will be due 30 days after the reporting period. When required on an annual basis, they will be due 90 days after the grant year. Final reports will be due 90 days after the expiration or termination of grant support.

(c) *Federal Cash Transactions Report*—(1) *Form.* (i) For grants paid by letter or credit, Treasury check advances or electronic transfer of funds, the grantee will submit the Standard Form 272, Federal Cash Transactions Report, and when necessary, its continuation sheet, Standard Form 272a, unless the terms of the award exempt the grantee from this requirement.

(ii) These reports will be used by the Federal agency to monitor cash advanced to grantees and to obtain disbursement or outlay information for each grant from grantees. The format of the report may be adapted as appropriate when reporting is to be accomplished with the assistance of automatic data processing equipment provided that the information to be submitted is not changed in substance.

(2) *Forecasts of Federal cash requirements.* Forecasts of Federal cash requirements may be required in the ''Remarks'' section of the report.

(3) *Cash in hands of subgrantees.* When considered necessary and feasible by the Federal agency, grantees may be required to report the amount of cash advances in excess of three days' needs in the hands of their subgrantees or contractors and to provide short narrative explanations of actions taken by the grantee to reduce the excess balances.

(4) *Frequency and due date.* Grantees must submit the report no later than 15 working days following the end of each quarter. However, where an advance either by letter of credit or electronic transfer of funds is authorized at an annualized rate of one million dollars or more, the Federal agency may require the report to be submitted within 15 working days following the end of each month.

(d) *Request for advance or reimbursement*—(1) *Advance payments.* Requests for Treasury check advance payments will be submitted on Standard Form 270, Request for Advance or Reimbursement. (This form will not be used for drawdowns under a letter of credit, electronic funds transfer or when Treasury check advance payments are made to the grantee automatically on a predetermined basis.)

(2) *Reimbursements.* Requests for reimbursement under nonconstruction grants will also be submitted on Standard Form 270. (For reimbursement requests under construction grants, see paragraph (e)(1) of this section.)

(3) The frequency for submitting payment requests is treated in § 1207.41(b)(3).

(e) *Outlay report and request for reimbursement for construction programs*—(1) *Grants that support construction activities paid by reimbursement method.* (i) Requests for reimbursement under construction grants will be submitted on Standard Form 271, Outlay Report and Request for Reimbursement for Construction Programs. Federal agencies may, however, prescribe the Request for Advance or Reimbursement form, specified in § 1207.41(d), instead of this form.

(ii) The frequency for submitting reimbursement requests is treated in § 1207.41(b)(3).

(2) *Grants that support construction activities paid by letter of credit, electronic funds transfer or Treasury check advance.* (i) When a construction grant is paid by letter of credit, electronic funds transfer or Treasury check advances, the grantee will report its outlays to the Federal agency using

Standard Form 271, Outlay Report and Request for Reimbursement for Construction Programs. The Federal agency will provide any necessary special instruction. However, frequency and due date shall be governed by § 1207.41(b)(3) and (4).

(ii) When a construction grant is paid by Treasury check advances based on periodic requests from the grantee, the advances will be requested on the form specified in § 1207.41(d).

(iii) The Federal agency may substitute the Financial Status Report specified in § 1207.41(b) for the Outlay Report and Request for Reimbursement for Construction Programs.

(3) *Accounting basis.* The accounting basis for the Outlay Report and Request for Reimbursement for Construction Programs shall be governed by § 1207.41(b)(2).

§ 1207.42 Retention and access requirements for records.

(a) *Applicability*. (1) This section applies to all financial and programmatic records, supporting documents, statistical records, and other records of grantees or subgrantees which are:

(i) Required to be maintained by the terms of this part, program regulations or the grant agreement, or

(ii) Otherwise reasonably considered as pertinent to program regulations or the grant agreement.

(2) This section does not apply to records maintained by contractors or subcontractors. For a requirement to place a provision concerning records in certain kinds of contracts, see § 1207.36(i)(10).

(b) *Length of retention period.* (1) Except as otherwise provided, records must be retained for three years from the starting date specified in paragraph (c) of this section.

(2) If any litigation, claim, negotiation, audit or other action involving the records has been started before the expiration of the 3-year period, the records must be retained until completion of the action and resolution of all issues which arise from it, or until the end of the regular 3-year period, whichever is later.

(3) To avoid duplicate recordkeeping, awarding agencies may make special arrangements with grantees and subgrantees to retain any records which are continuously needed for joint use. The awarding agency will request transfer of records to its custody when it determines that the records possess long-term retention value. When the records are transferred to or maintained by the Federal agency, the 3-year retention requirement is not applicable to the grantee or subgrantee.

(c) *Starting date of retention period*—(1) *General.* When grant support is continued or renewed at annual or other intervals, the retention period for the records of each funding period starts on the day the grantee or subgrantee submits to the awarding agency its single or last expenditure report for that period. However, if grant support is continued or renewed quarterly, the retention period for each year's records starts on the day the grantee submits its expenditure report for the last quarter of the Federal fiscal year. In all other cases, the retention period starts on the day the grantee submits its final expenditure report. If an expenditure report has been waived, the retention period starts on the day the report would have been due.

(2) *Real property and equipment records.* The retention period for real property and equipment records starts from the date of the disposition or replacement or transfer at the direction of the awarding agency.

(3) *Records for income transactions after grant or subgrant support.* In some cases grantees must report income after the period of grant support. Where there is such a requirement, the retention period for the records pertaining to the earning of the income starts from the end of the grantee's fiscal year in which the income is earned.

(4) *Indirect cost rate proposals, cost allocations plans, etc.* This paragraph applies to the following types of documents, and their supporting records: indirect cost rate computations or proposals, cost allocation plans, and any similar accounting computations of the rate at which a particular group of costs is chargeable (such as computer usage chargeback rates or composite fringe benefit rates).

(i) *If submitted for negotiation.* If the proposal, plan, or other computation is required to be submitted to the Federal

Government (or to the grantee) to form the basis for negotiation of the rate, then the 3-year retention period for its supporting records starts from the date of such submission.

(ii) *If not submitted for negotiation.* If the proposal, plan, or other computation is not required to be submitted to the Federal Government (or to the grantee) for negotiation purposes, then the 3-year retention period for the proposal plan, or computation and its supporting records starts from end of the fiscal year (or other accounting period) covered by the proposal, plan, or other computation.

(d) *Substitution of microfilm.* Copies made by microfilming, photocopying, or similar methods may be substituted for the original records.

(e) *Access to records*—(1) *Records of grantees and subgrantees.* The awarding agency and the Comptroller General of the United States, or any of their authorized representatives, shall have the right of access to any pertinent books, documents, papers, or other records of grantees and subgrantees which are pertinent to the grant, in order to make audits, examinations, excerpts, and transcripts.

(2) *Expiration of right of access.* The rights of access in this section must not be limited to the required retention period but shall last as long as the records are retained.

(f) *Restrictions on public access.* The Federal Freedom of Information Act (5 U.S.C. 552) does not apply to records Unless required by Federal, State, or local law, grantees and subgrantees are not required to permit public access to their records.

§ 1207.43 Enforcement.

(a) *Remedies for noncompliance.* If a grantee or subgrantee materially fails to comply with any term of an award, whether stated in a Federal statute or regulation, an assurance, in a State plan or application, a notice of award, or elsewhere, the awarding agency may take one or more of the following actions, as appropriate in the circumstances:

(1) Temporarily withhold cash payments pending correction of the deficiency by the grantee or subgrantee or more severe enforcement action by the awarding agency,

(2) Disallow (that is, deny both use of funds and matching credit for) all or part of the cost of the activity or action not in compliance,

(3) Wholly or partly suspend or terminate the current award for the grantee's or subgrantee's program,

(4) Withhold further awards for the program, or

(5) Take other remedies that may be legally available.

(b) *Hearings, appeals.* In taking an enforcement action, the awarding agency will provide the grantee or subgrantee an opportunity for such hearing, appeal, or other administrative proceeding to which the grantee or subgrantee is entitled under any statute or regulation applicable to the action involved.

(c) *Effects of suspension and termination.* Costs of grantee or subgrantee resulting from obligations incurred by the grantee or subgrantee during a suspension or after termination of an award are not allowable unless the awarding agency expressly authorizes them in the notice of suspension or termination or subsequently. Other grantee or subgrantee costs during suspension or after termination which are necessary and not reasonably avoidable are allowable if:

(1) The costs result from obligations which were properly incurred by the grantee or subgrantee before the effective date of suspension or termination, are not in anticipation of it, and, in the case of a termination, are noncancellable, and,

(2) The costs would be allowable if the award were not suspended or expired normally at the end of the funding period in which the termination takes effect.

(d) *Relationship to debarment and suspension.* The enforcement remedies identified in this section, including suspension and termination, do not preclude grantee or subgrantee from being subject to ''Debarment and Suspension'' under E.O. 12549 (see § 1207.35).

§ 1207.44 Termination for convenience.

Except as provided in § 1207.43 awards may be terminated in whole or in part only as follows:

(a) By the awarding agency with the consent of the grantee or subgrantee in which case the two parties shall agree upon the termination conditions, including the effective date and in the case of partial termination, the portion to be terminated, or

(b) By the grantee or subgrantee upon written notification to the awarding agency, setting forth the reasons for such termination, the effective date, and in the case of partial termination, the portion to be terminated. However, if, in the case of a partial termination, the awarding agency determines that the remaining portion of the award will not accomplish the purposes for which the award was made, the awarding agency may terminate the award in its entirety under either §1207.43 or paragraph (a) of this section.

Subpart D—After-The-Grant Requirements

§1207.50 Closeout.

(a) *General.* The Federal agency will close out the award when it determines that all applicable administrative actions and all required work of the grant has been completed.

(b) *Reports.* Within 90 days after the expiration or termination of the grant, the grantee must submit all financial, performance, and other reports required as a condition of the grant. Upon request by the grantee, Federal agencies may extend this timeframe. These may include but are not limited to:

(1) *Final performance or progress report.*

(2) *Financial Status Report (SF 269) or Outlay Report and Request for Reimbursement for Construction Programs (SF–271) (as applicable).*

(3) *Final request for payment (SF–270) (if applicable).*

(4) *Invention disclosure (if applicable).*

(5) *Federally-owned property report:* In accordance with §1207.32(f), a grantee must submit an inventory of all federally owned property (as distinct from property acquired with grant funds) for which it is accountable and request disposition instructions from the Federal agency of property no longer needed.

(c) *Cost adjustment.* The Federal agency will, within 90 days after receipt of reports in paragraph (b) of this section, make upward or downward adjustments to the allowable costs.

(d) *Cash adjustments.* (1) The Federal agency will make prompt payment to the grantee for allowable reimbursable costs.

(2) The grantee must immediately refund to the Federal agency any balance of unobligated (unencumbered) cash advanced that is not authorized to be retained for use on other grants.

§1207.51 Later disallowances and adjustments.

The closeout of a grant does not affect:

(a) The Federal agency's right to disallow costs and recover funds on the basis of a later audit or other review;

(b) The grantee's obligation to return any funds due as a result of later refunds, corrections, or other transactions;

(c) Records retention as required in §1207.42;

(d) Property management requirements in §§1207.31 and 1207.32; and

(e) Audit requirements in §1207.26.

§1207.52 Collection of amounts due.

(a) Any funds paid to a grantee in excess of the amount to which the grantee is finally determined to be entitled under the terms of the award constitute a debt to the Federal Government. If not paid within a reasonable period after demand, the Federal agency may reduce the debt by:

(1) Making an adminstrative offset against other requests for reimbursements,

(2) Withholding advance payments otherwise due to the grantee, or

(3) Other action permitted by law.

(b) Except where otherwise provided by statutes or regulations, the Federal agency will charge interest on an overdue debt in accordance with the Federal Claims Collection Standards (4 CFR chapter II). The date from which interest is computed is not extended by litigation or the filing of any form of appeal.

Subpart E—Entitlement [Reserved]

PART 1208—ENFORCEMENT OF NONDISCRIMINATION ON THE BASIS OF HANDICAP IN PROGRAMS OR ACTIVITIES CONDUCTED BY THE NATIONAL ARCHIVES AND RECORDS ADMINISTRATION

Sec.

1208.101 Purpose.
1208.102 Application.
1208.103 Definitions.
1208.104—1208.109 [Reserved]
1208.110 Self-evaluation.
1208.111 Notice.
1208.112—1208.129 [Reserved]
1208.130 General prohibitions against discrimination.
1208.131—1208.139 [Reserved]
1208.140 Employment.
1208.141—1208.148 [Reserved]
1208.149 Program accessibility: Discrimination prohibited.
1208.150 Program accessibility: Existing facilities.
1208.151 Program accessibility: New construction and alterations.
1208.152—1208.159 [Reserved]
1208.160 Communications.
1208.161—1208.169 [Reserved]
1208.170 Compliance procedures.
1208.171—1208.999 [Reserved]

AUTHORITY: 29 U.S.C. 794.

SOURCE: 53 FR 25884, 25885, July 8, 1988, unless otherwise noted.

§ 1208.101 Purpose.

The purpose of this regulation is to effectuate section 119 of the Rehabilitation, Comprehensive Services, and Developmental Disabilities Amendments of 1978, which amended section 504 of the Rehabilitation Act of 1973 to prohibit discrimination on the basis of handicap in programs or activities conducted by Executive agencies or the United States Postal Service.

§ 1208.102 Application.

This regulation (§§ 1208.101–1208.170) applies to all programs or activities conducted by the agency, except for programs or activities conducted outside the United States that do not involve individuals with handicaps in the United States.

§ 1208.103 Definitions.

For purposes of this regulation, the term—

Assistant Attorney General means the Assistant Attorney General, Civil Rights Division, United States Department of Justice.

Auxiliary aids means services or devices that enable persons with impaired sensory, manual, or speaking skills to have an equal opportunity to participate in, and enjoy the benefits of, programs or activities conducted by the agency. For example, auxiliary aids useful for persons with impaired vision include readers, Brailled materials, audio recordings, and other similar services and devices. Auxiliary aids useful for persons with impaired hearing include telephone handset amplifiers, telephones compatible with hearing aids, telecommunication devices for deaf persons (TDD's), interpreters, notetakers, written materials, and other similar services and devices.

Complete complaint means a written statement that contains the complainant's name and address and describes the agency's alleged discriminatory action in sufficient detail to inform the agency of the nature and date of the alleged violation of section 504. It shall be signed by the complainant or by someone authorized to do so on his or her behalf. Complaints filed on behalf of classes or third parties shall describe or identify (by name, if possible) the alleged victims of discrimination.

Facility means all or any portion of buildings, structures, equipment, roads, walks, parking lots, rolling stock or other conveyances, or other real or personal property.

Historic preservation programs means programs conducted by the agency that have preservation of historic properties as a primary purpose.

Historic properties means those properties that are listed or eligible for listing in the National Register of Historic Places or properties designated as historic under a statute of the appropriate State or local government body.

Individual with handicaps means any person who has a physical or mental impairment that substantially limits one or more major life activities, has a record of such an impairment, or is regarded as having such an impairment.

As used in this definition, the phrase:

(1) *Physical or mental impairment* includes—

(i) Any physiological disorder or condition, cosmetic disfigurement, or anatomical loss affecting one or more of the following body systems: Neurological; musculoskeletal; special sense organs; respiratory, including speech organs; cardiovascular; reproductive; digestive; genitourinary; hemic and lymphatic; skin; and endocrine; or

(ii) Any mental or psychological disorder, such as mental retardation, organic brain syndrome, emotional or mental illness, and specific learning disabilities. The term *physical or mental impairment* includes, but is not limited to, such diseases and conditions as orthopedic, visual, speech, and hearing impairments, cerebral palsy, epilepsy, muscular dystrophy, multiple sclerosis, cancer, heart disease, diabetes, mental retardation, emotional illness, and drug addiction and alcoholism.

(2) *Major life activities* includes functions such as caring for one's self, performing manual tasks, walking, seeing, hearing, speaking, breathing, learning, and working.

(3) *Has a record of such an impairment* means has a history of, or has been misclassified as having, a mental or physical impairment that substantially limits one or more major life activities.

(4) *Is regarded as having an impairment* means—

(i) Has a physical or mental impairment that does not substantially limit major life activities but is treated by the agency as constituting such a limitation;

(ii) Has a physical or mental impairment that substantially limits major life activities only as a result of the attitudes of others toward such impairment; or

(iii) Has none of the impairments defined in paragraph (i) of this definition but is treated by the agency as having such an impairment.

Qualified individual with handicaps means—

(1) With respect to preschool, elementary, or secondary education services provided by the agency, an individual with handicaps who is a member of a class of persons otherwise entitled by statute, regulation, or agency policy to receive education services from the agency;

(2) With respect to any other agency program or activity under which a person is required to perform services or to achieve a level of accomplishment, an individual with handicaps who meets the essential eligibility requirements and who can achieve the purpose of the program or activity without modifications in the program or activity that the agency can demonstrate would result in a fundamental alteration in its nature;

(3) With respect to any other program or activity, an individual with handicaps who meets the essential eligibility requirements for participation in, or receipt of benefits from, that program or activity; and

(4) *Qualified handicapped person* as that term is defined for purposes of employment in 29 CFR 1613.702(f), which is made applicable to this regulation by §1208.140.

Section 504 means section 504 of the Rehabilitation Act of 1973 (Pub. L. 93–112, 87 Stat. 394 (29 U.S.C. 794)), as amended by the Rehabilitation Act Amendments of 1974 (Pub. L. 93–516, 88 Stat. 1617); the Rehabilitation, Comprehensive Services, and Developmental Disabilities Amendments of 1978 (Pub. L. 95–602, 92 Stat. 2955); and the Rehabilitation Act Amendments of 1986 (Pub. L. 99–506, 100 Stat. 1810). As used in this regulation, section 504 applies only to programs or activities conducted by Executive agencies and not to federally assisted programs.

Substantial impairment means a significant loss of the integrity of finished materials, design quality, or special character resulting from a permanent alteration.

§§1208.104—1208.109 [Reserved]

§1208.110 Self-evaluation.

(a) The agency shall, by September 6, 1989, evaluate its current policies and practices, and the effects thereof, that do not or may not meet the requirements of this regulation and, to the extent modification of any such policies and practices is required, the agency shall proceed to make the necessary modifications.

(b) The agency shall provide an opportunity to interested persons, including individuals with handicaps or organizations representing individuals with handicaps, to participate in the self-evaluation process by submitting comments (both oral and written).

(c) The agency shall, for at least three years following completion of the self-evaluation, maintain on file and make available for public inspection:

(1) A description of areas examined and any problems identified; and

(2) A description of any modifications made.

§ 1208.111 Notice.

The agency shall make available to employees, applicants, participants, beneficiaries, and other interested persons such information regarding the provisions of this regulation and its applicability to the programs or activities conducted by the agency, and make such information available to them in such manner as the head of the agency finds necessary to apprise such persons of the protections against discrimination assured them by section 504 and this regulation.

§§ 1208.112—1208.129 [Reserved]

§ 1208.130 General prohibitions against discrimination.

(a) No qualified individual with handicaps shall, on the basis of handicap, be excluded from participation in, be denied the benefits of, or otherwise be subjected to discrimination under any program or activity conducted by the agency.

(b)(1) The agency, in providing any aid, benefit, or service, may not, directly or through contractual, licensing, or other arrangements, on the basis of handicap—

(i) Deny a qualified individual with handicaps the opportunity to participate in or benefit from the aid, benefit, or service;

(ii) Afford a qualified individual with handicaps an opportunity to participate in or benefit from the aid, benefit, or service that is not equal to that afforded others;

(iii) Provide a qualified individual with handicaps with an aid, benefit, or service that is not as effective in affording equal opportunity to obtain the same result, to gain the same benefit, or to reach the same level of achievement as that provided to others;

(iv) Provide different or separate aid, benefits, or services to individuals with handicaps or to any class of individuals with handicaps than is provided to others unless such action is necessary to provide qualified individuals with handicaps with aid, benefits, or services that are as effective as those provided to others;

(v) Deny a qualified individual with handicaps the opportunity to participate as a member of planning or advisory boards;

(vi) Otherwise limit a qualified individual with handicaps in the enjoyment of any right, privilege, advantage, or opportunity enjoyed by others receiving the aid, benefit, or service.

(2) The agency may not deny a qualified individual with handicaps the opportunity to participate in programs or activities that are not separate or different, despite the existence of permissibly separate or different programs or activities.

(3) The agency may not, directly or through contractual or other arrangements, utilize criteria or methods of administration the purpose or effect of which would—

(i) Subject qualified individuals with handicaps to discrimination on the basis of handicap; or

(ii) Defeat or substantially impair accomplishment of the objectives of a program or activity with respect to individuals with handicaps.

(4) The agency may not, in determining the site or location of a facility, make selections the purpose or effect of which would—

(i) Exclude individuals with handicaps from, deny them the benefits of, or otherwise subject them to discrimination under any program or activity conducted by the agency; or

(ii) Defeat or substantially impair the accomplishment of the objectives of a program or activity with respect to individuals with handicaps.

(5) The agency, in the selection of procurement contractors, may not use criteria that subject qualified individuals with handicaps to discrimination on the basis of handicap.

(6) The agency may not administer a licensing or certification program in a manner that subjects qualified individuals with handicaps to discrimination on the basis of handicap, nor may the agency establish requirements for the programs or activities of licensees or certified entities that subject qualified individuals with handicaps to discrimination on the basis of handicap. However, the programs or activities of entities that are licensed or certified by the agency are not, themselves, covered by this regulation.

(c) The exclusion of nonhandicapped persons from the benefits of a program limited by Federal statute or Executive order to individuals with handicaps or the exclusion of a specific class of individuals with handicaps from a program limited by Federal statute or Executive order to a different class of individuals with handicaps is not prohibited by this regulation.

(d) The agency shall administer programs and activities in the most integrated setting appropriate to the needs of qualified individuals with handicaps.

§§1208.131—1208.139 [Reserved]

§1208.140 Employment.

No qualified individual with handicaps shall, on the basis of handicap, be subject to discrimination in employment under any program or activity conducted by the agency. The definitions, requirements, and procedures of section 501 of the Rehabilitation Act of 1973 (29 U.S.C. 791), as established by the Equal Employment Opportunity Commission in 29 CFR part 1613, shall apply to employment in federally conducted programs or activities.

§1208.141—1208.148 [Reserved]

§1208.149 Program accessibility: Discrimination prohibited.

Except as otherwise provided in §1208.150, no qualified individual with handicaps shall, because the agency's facilities are inaccessible to or unusable by individuals with handicaps, be denied the benefits of, be excluded from participation in, or otherwise be subjected to discrimination under any program or activity conducted by the agency.

§1208.150 Program accessibility: Existing facilities.

(a) *General.* The agency shall operate each program or activity so that the program or activity, when viewed in its entirety, is readily accessible to and usable by individuals with handicaps. This paragraph does not—

(1) Necessarily require the agency to make each of its existing facilities accessible to and usable by individuals with handicaps;

(2) In the case of historic preservation programs, require the agency to take any action that would result in a substantial impairment of significant historic features of an historic property; or

(3) Require the agency to take any action that it can demonstrate would result in a fundamental alteration in the nature of a program or activity or in undue financial and administrative burdens. In those circumstances where agency personnel believe that the proposed action would fundamentally alter the program or activity or would result in undue financial and administrative burdens, the agency has the burden of proving that compliance with §1208.150(a) would result in such alteration or burdens. The decision that compliance would result in such alteration or burdens must be made by the agency head or his or her designee after considering all agency resources available for use in the funding and operation of the conducted program or activity, and must be accompanied by a written statement of the reasons for reaching that conclusion. If an action would result in such an alteration or such burdens, the agency shall take any other action that would not result in such an alteration or such burdens but would nevertheless ensure that individuals with handicaps receive the benefits and services of the program or activity.

(b) *Methods*—(1) *General.* The agency may comply with the requirements of this section through such means as redesign of equipment, reassignment of services to accessible buildings, assignment of aides to beneficiaries, home visits, delivery of services at alternate accessible sites, alteration of existing facilities and construction of new facilities, use of accessible rolling stock,

or any other methods that result in making its programs or activities readily accessible to and usable by individuals with handicaps. The agency is not required to make structural changes in existing facilities where other methods are effective in achieving compliance with this section. The agency, in making alterations to existing buildings, shall meet accessibility requirements to the extent compelled by the Architectural Barriers Act of 1968, as amended (42 U.S.C. 4151–4157), and any regulations implementing it. In choosing among available methods for meeting the requirements of this section, the agency shall give priority to those methods that offer programs and activities to qualified individuals with handicaps in the most integrated setting appropriate.

(2) *Historic preservation programs.* In meeting the requirements of § 1208.150(a) in historic preservation programs, the agency shall give priority to methods that provide physical access to individuals with handicaps. In cases where a physical alteration to an historic property is not required because of § 1208.150(a)(2) or (3), alternative methods of achieving program accessibility include—

(i) Using audio-visual materials and devices to depict those portions of an historic property that cannot otherwise be made accessible;

(ii) Assigning persons to guide individuals with handicaps into or through portions of historic properties that cannot otherwise be made accessible; or

(iii) Adopting other innovative methods.

(c) *Time period for compliance.* The agency shall comply with the obligations established under this section by November 7, 1988, except that where structural changes in facilities are undertaken, such changes shall be made by September 6, 1991, but in any event as expeditiously as possible.

(d) *Transition plan.* In the event that structural changes to facilities will be undertaken to achieve program accessibility, the agency shall develop, by March 6, 1989, a transition plan setting forth the steps necessary to complete such changes. The agency shall provide an opportunity to interested persons, including individuals with handicaps or organizations representing individuals with handicaps, to participate in the development of the transition plan by submitting comments (both oral and written). A copy of the transition plan shall be made available for public inspection. The plan shall, at a minimum—

(1) Identify physical obstacles in the agency's facilities that limit the accessibility of its programs or activities to individuals with handicaps;

(2) Describe in detail the methods that will be used to make the facilities accessible;

(3) Specify the schedule for taking the steps necessary to achieve compliance with this section and, if the time period of the transition plan is longer than one year, identify steps that will be taken during each year of the transition period; and

(4) Indicate the official responsible for implementation of the plan.

§ 1208.151 Program accessibility: New construction and alterations.

Each building or part of a building that is constructed or altered by, on behalf of, or for the use of the agency shall be designed, constructed, or altered so as to be readily accessible to and usable by individuals with handicaps. The definitions, requirements, and standards of the Architectural Barriers Act (42 U.S.C. 4151–4157), as established in 41 CFR 101–19.600 to 101–19.607, apply to buildings covered by this section.

§§ 1208.152—1208.159 [Reserved]

§ 1208.160 Communications.

(a) The agency shall take appropriate steps to ensure effective communication with applicants, participants, personnel of other Federal entities, and members of the public.

(1) The agency shall furnish appropriate auxiliary aids where necessary to afford an individual with handicaps an equal opportunity to participate in, and enjoy the benefits of, a program or activity conducted by the agency.

(i) In determining what type of auxiliary aid is necessary, the agency shall

give primary consideration to the requests of the individual with handicaps.

(ii) The agency need not provide individually prescribed devices, readers for personal use or study, or other devices of a personal nature.

(2) Where the agency communicates with applicants and beneficiaries by telephone, telecommunication devices for deaf persons (TDD's) or equally effective telecommunication systems shall be used to communicate with persons with impaired hearing.

(b) The agency shall ensure that interested persons, including persons with impaired vision or hearing, can obtain information as to the existence and location of accessible services, activities, and facilities.

(c) The agency shall provide signage at a primary entrance to each of its inaccessible facilities, directing users to a location at which they can obtain information about accessible facilities. The international symbol for accessibility shall be used at each primary entrance of an accessible facility.

(d) This section does not require the agency to take any action that it can demonstrate would result in a fundamental alteration in the nature of a program or activity or in undue financial and administrative burdens. In those circumstances where agency personnel believe that the proposed action would fundamentally alter the program or activity or would result in undue financial and administrative burdens, the agency has the burden of proving that compliance with §1208.160 would result in such alteration or burdens. The decision that compliance would result in such alteration or burdens must be made by the agency head or his or her designee after considering all agency resources available for use in the funding and operation of the conducted program or activity and must be accompanied by a written statement of the reasons for reaching that conclusion. If an action required to comply with this section would result in such an alteration or such burdens, the agency shall take any other action that would not result in such an alteration or such burdens but would nevertheless ensure that, to the maximum extent possible, individuals with handicaps receive the benefits and services of the program or activity.

§§1208.161—1208.169 [Reserved]

§1208.170 Compliance procedures.

(a) Except as provided in paragraph (b) of this section, this section applies to all allegations of discrimination on the basis of handicap in programs and activities conducted by the agency.

(b) The agency shall process complaints alleging violations of section 504 with respect to employment according to the procedures established by the Equal Employment Opportunity Commission in 29 CFR part 1613 pursuant to section 501 of the Rehabilitation Act of 1973 (29 U.S.C. 791).

(c) The Assistant Archivist for Management and Administration shall be responsible for coordinating implementation of this section. Compliants may be sent to National Archives and Records Administration (NA), Washington, DC 20408.

(d) The agency shall accept and investigate all complete complaints for which it has jurisdiction. All complete complaints must be filed within 180 days of the alleged act of discrimination. The agency may extend this time period for good cause.

(e) If the agency receives a complaint over which it does not have jurisdiction, it shall promptly notify the complainant and shall make reasonable efforts to refer the complaint to the appropriate Government entity.

(f) The agency shall notify the Architectural and Transportation Barriers Compliance Board upon receipt of any complaint alleging that a building or facility that is subject to the Architectural Barriers Act of 1968, as amended (42 U.S.C. 4151–4157), is not readily accessible to and usable by individuals with handicaps.

(g) Within 180 days of the receipt of a complete complaint for which it has jurisdiction, the agency shall notify the complainant of the results of the investigation in a letter containing—

(1) Findings of fact and conclusions of law;

(2) A description of a remedy for each violation found; and

(3) A notice of the right to appeal.

(h) Appeals of the findings of fact and conclusions of law or remedies must be filed by the complainant within 90 days of receipt from the agency of the letter required by §1208.170(g). The agency may extend this time for good cause.

(i) Timely appeals shall be accepted and processed by the head of the agency.

(j) The head of the agency shall notify the complainant of the results of the appeal within 60 days of the receipt of the request. If the head of the agency determines that additional information is needed from the complainant, he or she shall have 60 days from the date of receipt of the additional information to make his or her determination on the appeal.

(k) The time limits cited in paragraphs (g) and (j) of this section may be extended with the permission of the Assistant Attorney General.

(l) The agency may delegate its authority for conducting complaint investigations to other Federal agencies, except that the authority for making the final determination may not be delegated to another agency.

[53 FR 25884, 25885, July 8, 1988, as amended at 53 FR 25884, July 8, 1988]

§§ 1208.171—1208.999 [Reserved]

PART 1209—GOVERNMENTWIDE DEBARMENT AND SUSPENSION (NONPROCUREMENT) AND GOVERNMENTWIDE REQUIREMENTS FOR DRUG-FREE WORKPLACE (GRANTS)

Subpart A—General

Sec.
1209.100 Purpose.
1209.105 Definitions.
1209.110 Coverage.
1209.115 Policy.

Subpart B—Effect of Action

1209.200 Debarment or suspension.
1209.205 Ineligible persons.
1209.210 Voluntary exclusion.
1209.215 Exception provision.
1209.220 Continuation of covered transactions.
1209.225 Failure to adhere to restrictions.

Subpart C—Debarment

1209.300 General.
1209.305 Causes for debarment.
1209.310 Procedures.
1209.311 Investigation and referral.
1209.312 Notice of proposed debarment.
1209.313 Opportunity to contest proposed debarment.
1209.314 Debarring official's decision.
1209.315 Settlement and voluntary exclusion.
1209.320 Period of debarment.
1209.325 Scope of debarment.

Subpart D—Suspension

1209.400 General.
1209.405 Causes for suspension.
1209.410 Procedures.
1209.411 Notice of suspension.
1209.412 Opportunity to contest suspension.
1209.413 Suspending official's decision.
1209.415 Period of suspension.
1209.420 Scope of suspension.

Subpart E—Responsibilities of GSA, Agency and Participants

1209.500 GSA responsibilities.
1209.505 NARA responsibilities.
1209.510 Participant's responsibilities.

Subpart F—Drug-Free Workplace Requirements (Grants)

1209.600 Purpose.
1209.605 Definitions.
1209.610 Coverage.
1209.615 Grounds for suspension of payments, suspension or termination of grants, or suspension or debarment.
1209.620 Effect of violation.
1209.625 Exception provision.
1209.630 Certification requirements and procedures.
1209.635 Reporting of and employee sanctions for convictions of criminal drug offenses.
APPENDIX A TO PART 1209—CERTIFICATION REGARDING DEBARMENT, SUSPENSION, AND OTHER RESPONSIBILITY MATTERS—PRIMARY COVERED TRANSACTIONS
APPENDIX B TO PART 1209—CERTIFICATION REGARDING DEBARMENT, SUSPENSION, INELIGIBILITY AND VOLUNTARY EXCLUSION—LOWER TIER COVERED TRANSACTIONS
APPENDIX C TO PART 1209—CERTIFICATION REGARDING DRUG-FREE WORKPLACE REQUIREMENTS

AUTHORITY: E.O. 12549; sec. 5151–5160 of the Drug-Free Workplace Act of 1988 (Pub. L. 100–690, title V, subtitle D; 41 U.S.C. 701 *et seq.*); 44 U.S.C. 2104(a).

SOURCE: 53 FR 19193, 19194, 19204, May 26, 1988, unless otherwise noted.

CROSS REFERENCE: See also Office of Management and Budget notice published at 55 FR 21679, May 25, 1990, and 60 FR 33036, June 26, 1995.

Subpart A—General

§1209.100 Purpose.

(a) Executive Order (E.O.) 12549 provides that, to the extent permitted by law, Executive departments and agencies shall participate in a governmentwide system for nonprocurement debarment and suspension. A person who is debarred or suspended shall be excluded from Federal financial and nonfinancial assistance and benefits under Federal programs and activities. Debarment or suspension of a participant in a program by one agency shall have governmentwide effect.

(b) These regulations implement section 3 of E.O. 12549 and the guidelines promulgated by the Office of Management and Budget under section 6 of the E.O. by:

(1) Prescribing the programs and activities that are covered by the governmentwide system;

(2) Prescribing the governmentwide criteria and governmentwide minimum due process procedures that each agency shall use;

(3) Providing for the listing of debarred and suspended participants, participants declared ineligible (see definition of ''ineligible'' in §1209.105), and participants who have voluntarily excluded themselves from participation in covered transactions;

(4) Setting forth the consequences of a debarment, suspension, determination of ineligibility, or voluntary exclusion; and

(5) Offering such other guidance as necessary for the effective implementation and administration of the governmentwide system.

(c) These regulations also implement Executive Order 12689 (3 CFR, 1989 Comp., p. 235) and 31 U.S.C. 6101 note (Public Law 103–355, sec. 2455, 108 Stat. 3327) by—

(1) Providing for the inclusion in the *List of Parties Excluded from Federal Procurement and Nonprocurement Programs* all persons proposed for debarment, debarred or suspended under the Federal Acquisition Regulation, 48 CFR Part 9, subpart 9.4; persons against which governmentwide exclusions have been entered under this part; and persons determined to be ineligible; and

(2) Setting forth the consequences of a debarment, suspension, determination of ineligibility, or voluntary exclusion.

(d) Although these regulations cover the listing of ineligible participants and the effect of such listing, they do not prescribe policies and procedures governing declarations of ineligibility.

[60 FR 33040, 33058, June 26, 1995]

§1209.105 Definitions.

The following definitions apply to this part:

Adequate evidence. Information sufficient to support the reasonable belief that a particular act or omission has occurred.

Affiliate. Persons are affiliates of each other if, directly or indirectly, either one controls or has the power to control the other, *or*, a third person controls or has the power to control both. Indicia of control include, but are not limited to: interlocking management or ownership, identity of interests among family members, shared facilities and equipment, common use of employees, or a business entity organized following the suspension or debarment of a person which has the same or similar management, ownership, or principal employees as the suspended, debarred, ineligible, or voluntarily excluded person.

Agency. Any executive department, military department or defense agency or other agency of the executive branch, excluding the independent regulatory agencies.

Civil judgment. The disposition of a civil action by any court of competent jurisdiction, whether entered by verdict, decision, settlement, stipulation, or otherwise creating a civil liability for the wrongful acts complained of; or a final determination of liability under the Program Fraud Civil Remedies Act of 1988 (31 U.S.C. 3801–3812).

Conviction. A judgment or conviction of a criminal offense by any court of competent jurisdiction, whether entered upon a verdict or a plea, including a plea of nolo contendere.

Debarment. An action taken by a debarring official in accordance with these regulations to exclude a person from participating in covered transactions. A person so excluded is ''debarred.''

Debarring official. An official authorized to impose debarment. The debarring official is either:

(1) The agency head, or

(2) An official designated by the agency head.

Indictment. Indictment for a criminal offense. An information or other filing by competent authority charging a criminal offense shall be given the same effect as an indictment.

Ineligible. Excluded from participation in Federal nonprocurement programs pursuant to a determination of ineligibility under statutory, executive order, or regulatory authority, other than Executive Order 12549 and its agency implementing regulations; for exemple, excluded pursuant to the Davis-Bacon Act and its implementing regulations, the equal employment opportunity acts and executive orders, or the environmental protection acts and executive orders. A person is ineligible where the determination of ineligibility affects such person's eligibility to participate in more than one covered transaction.

Legal proceedings. Any criminal proceeding or any civil judicial proceeding to which the Federal Government or a State or local government or quasi-governmental authority is a party. The term includes appeals from such proceedings.

List of Parties Excluded from Federal Procurement and Nonprocurement Programs. A list compiled, maintained and distributed by the General Services Administration (GSA) containing the names and other information about persons who have been debarred, suspended, or voluntarily excluded under Executive Orders 12549 and 12689 and these regulations or 48 CFR part 9, subpart 9.4, persons who have been proposed for debarment under 48 CFR part 9, subpart 9.4, and those persons who have been determined to be ineligible.

Notice. A written communication served in person or sent by certified mail, return receipt requested, or its equivalent, to the last known address of a party, its identified counsel, its agent for service of process, or any partner, officer, director, owner, or joint venturer of the party. Notice, if undeliverable, shall be considered to have been received by the addressee five days after being properly sent to the last address known by the agency.

Participant. Any person who submits a proposal for, enters into, or reasonably may be expected to enter into a covered transaction. This term also includes any person who acts on behalf of or is authorized to commit a participant in a covered transaction as an agent or representative of another participant.

Person. Any individual, corporation, partnership, association, unit of government or legal entity, however organized, except: foreign governments or foreign governmental entities, public international organizations, foreign government owned (in whole or in part) or controlled entities, and entities consisting wholly or partially of foreign governments or foreign governmental entities.

Preponderance of the evidence. Proof by information that, compared with that opposing it, leads to the conclusion that the fact at issue is more probably true than not.

Principal. Officer, director, owner, partner, key employee, or other person within a participant with primary management or supervisory responsibilities; or a person who has a critical influence on or substantive control over a covered transaction, whether or not employed by the participant. Persons who have a critical influence on or substantive control over a covered transaction are:

(1) Principal investigators.

Proposal. A solicited or unsolicited bid, application, request, invitation to consider or similar communication by or on behalf of a person seeking to participate or to receive a benefit, directly or indirectly, in or under a covered transaction.

Respondent. A person against whom a debarment or suspension action has been initiated.

State. Any of the States of the United States, the District of Columbia, the Commonwealth of Puerto Rico, any territory or possession of the United

States, or any agency of a State, exclusive of institutions of higher education, hospitals, and units of local government. A State instrumentality will be considered part of the State government if it has a written determination from a State government that such State considers that instrumentality to be an agency of the State government.

Suspending official. An official authorized to impose suspension. The suspending official is either:

(1) The agency head, or

(2) An official designated by the agency head.

Suspension. An action taken by a suspending official in accordance with these regulations that immediately excludes a person from participating in covered transactions for a temporary period, pending completion of an investigation and such legal, debarment, or Program Fraud Civil Remedies Act proceedings as may ensue. A person so excluded is ''suspended.''

Voluntary exclusion or voluntarily excluded. A status of nonparticipation or limited participation in covered transactions assumed by a person pursuant to the terms of a settlement.

NARA. National Archives and Records Administration.

[53 FR 19193, 19194, 19204, May 26, 1988, as amended at 60 FR 33040, 33058, June 26, 1995]

§1209.110 Coverage.

(a) These regulations apply to all persons who have participated, are currently participating or may reasonably be expected to participate in transactions under Federal nonprocurement programs. For purposes of these regulations such transactions will be referred to as ''covered transactions.''

(1) *Covered transaction.* For purposes of these regulations, a covered transaction is a primary covered transaction or a lower tier covered transaction. Covered transactions at any tier need not involve the transfer of Federal funds.

(i) *Primary covered transaction.* Except as noted in paragraph (a)(2) of this section, a primary covered transaction is any nonprocurement transaction between an agency and a person, regardless of type, including: grants, cooperative agreements, scholarships, fellowships, contracts of assistance, loans, loan guarantees, subsidies, insurance, payments for specified use, donation agreements and any other nonprocurement transactions between a Federal agency and a person. Primary covered transactions also include those transactions specially designated by the U.S. Department of Housing and Urban Development in such agency's regulations governing debarment and suspension.

(ii) *Lower tier covered transaction.* A lower tier covered transaction is:

(A) Any transaction between a participant and a person other than a procurement contract for goods or services, regardless of type, under a primary covered transaction.

(B) Any procurement contract for goods or services between a participant and a person, regardless of type, expected to equal or exceed the Federal procurement small purchase threshold fixed at 10 U.S.C. 2304(g) and 41 U.S.C. 253(g) (currently $25,000) under a primary covered transaction.

(C) Any procurement contract for goods or services between a participant and a person under a covered transaction, regardless of amount, under which that person will have a critical influence on or substantive control over that covered transaction. Such persons are:

(*1*) Principal investigators.

(*2*) Providers of federally-required audit services.

(2) *Exceptions.* The following transactions are not covered:

(i) Statutory entitlements or mandatory awards (but not subtier awards thereunder which are not themselves mandatory), including deposited funds insured by the Federal Government;

(ii) Direct awards to foreign governments or public international organizations, or transactions with foreign governments or foreign governmental entities, public international organizations, foreign government owned (in whole or in part) or controlled entities, entities consisting wholly or partially of foreign governments or foreign governmental entities;

(iii) Benefits to an individual as a personal entitlement without regard to the individual's present responsibility

(but benefits received in an individual's business capacity are not excepted);

(iv) Federal employment;

(v) Transactions pursuant to national or agency-recognized emergencies or disasters;

(vi) Incidental benefits derived from ordinary governmental operations; and

(vii) Other transactions where the application of these regulations would be prohibited by law.

(b) *Relationship to other sections.* This section describes the types of transactions to which a debarment or suspension under the regulations will apply. Subpart B, ''Effect of Action,'' § 1209.200, ''Debarment or suspension,'' sets forth the consequences of a debarment or suspension. Those consequences would obtain only with respect to participants and principals in the covered transactions and activities described in § 1209.110(a). Sections 1209.325, ''Scope of debarment,'' and 1209.420, ''Scope of suspension,'' govern the extent to which a specific participant or organizational elements of a participant would be automatically included within a debarment or suspension action, and the conditions under which affiliates or persons associated with a participant may also be brought within the scope of the action.

(c) *Relationship to Federal procurement activities.* In accordance with E.O. 12689 and section 2455 of Public Law 103–355, any debarment, suspension, proposed debarment or other governmentwide exclusion initiated under the Federal Acquisition Regulation (FAR) on or after August 25, 1995 shall be recognized by and effective for Executive Branch agencies and participants as an exclusion under this regulation. Similarly, any debarment, suspension or other governmentwide exclusion initiated under this regulation on or after August 25, 1995 shall be recognized by and effective for those agencies as a debarment or suspension under the FAR.

[53 FR 19193, 19194, 19204, May 26, 1988, as amended at 60 FR 33041, 33058, June 26, 1995]

§ 1209.115 Policy.

(a) In order to protect the public interest, it is the policy of the Federal Government to conduct business only with responsible persons. Debarment and suspension are discretionary actions that, taken in accordance with Executive Order 12549 and these regulations, are appropriate means to implement this policy.

(b) Debarment and suspension are serious actions which shall be used only in the public interest and for the Federal Government's protection and not for purposes of punishment. Agencies may impose debarment or suspension for the causes and in accordance with the procedures set forth in these regulations.

(c) When more than one agency has an interest in the proposed debarment or suspension of a person, consideration shall be given to designating one agency as the lead agency for making the decision. Agencies are encouraged to establish methods and procedures for coordinating their debarment or suspension actions.

Subpart B—Effect of Action

§ 1209.200 Debarment or suspension.

(a) *Primary covered transactions.* Except to the extent prohibited by law, persons who are debarred or suspended shall be excluded from primary covered transactions as either participants or principals throughout the Executive Branch of the Federal Government for the period of their debarment, suspension, or the period they are proposed for debarment under 48 CFR part 9, subpart 9.4. Accordingly, no agency shall enter into primary covered transactions with such excluded persons during such period, except as permitted pursuant to § 1209.215.

(b) *Lower tier covered transactions.* Except to the extent prohibited by law, persons who have been proposed for debarment under 48 CFR part 9, subpart 9.4, debarred or suspended shall be excluded from participating as either participants or principals in all lower tier covered transactions (see § 1209.110(a)(1)(ii)) for the period of their exclusion.

(c) *Exceptions.* Debarment or suspension does not affect a person's eligibility for—

(1) Statutory entitlements or mandatory awards (but not subtier awards thereunder which are not themselves mandatory), including deposited funds insured by the Federal Government;

(2) Direct awards to foreign governments or public international organizations, or transactions with foreign governments or foreign governmental entities, public international organizations, foreign government owned (in whole or in part) or controlled entities, and entities consisting wholly or partially of foreign governments or foreign governmental entities;

(3) Benefits to an individual as a personal entitlement without regard to the individual's present responsibility (but benefits received in an individual's business capacity are not excepted);

(4) Federal employment;

(5) Transactions pursuant to national or agency-recognized emergencies or disasters;

(6) Incidental benefits derived from ordinary governmental operations; and

(7) Other transactions where the application of these regulations would be prohibited by law.

[60 FR 33041, 33058, June 26, 1995]

§1209.205 Ineligible persons.

Persons who are ineligible, as defined in §1209.105(i), are excluded in accordance with the applicable statutory, executive order, or regulatory authority.

§1209.210 Voluntary exclusion.

Persons who accept voluntary exclusions under §1209.315 are excluded in accordance with the terms of their settlements. NARA shall, and participants may, contact the original action agency to ascertain the extent of the exclusion.

§1209.215 Exception provision.

NARA may grant an exception permitting a debarred, suspended, or voluntarily excluded person, or a person proposed for debarment under 48 CFR part 9, subpart 9.4, to participate in a particular covered transaction upon a written determination by the agency head or an authorized designee stating the reason(s) for deviating from the Presidential policy established by Executive Order 12549 and §1209.200. However, in accordance with the President's stated intention in the Executive Order, exceptions shall be granted only infrequently. Exceptions shall be reported in accordance with §1209.505(a).

[60 FR 33041, 33058, June 26, 1995]

§1209.220 Continuation of covered transactions.

(a) Notwithstanding the debarment, suspension, proposed debarment under 48 CFR part 9, subpart 9.4, determination of ineligibility, or voluntary exclusion of any person by an agency, agencies and participants may continue covered transactions in existence at the time the person was debarred, suspended, proposed for debarment under 48 CFR part 9, subpart 9.4, declared ineligible, or voluntarily excluded. A decision as to the type of termination action, if any, to be taken should be made only after thorough review to ensure the propriety of the proposed action.

(b) Agencies and participants shall not renew or extend covered transactions (other than no-cost time extensions) with any person who is debarred, suspended, proposed for debarment under 48 CFR part 9, subpart 9.4, ineligible or voluntary excluded, except as provided in §1209.215.

[60 FR 33041, 33058, June 26, 1995]

§1209.225 Failure to adhere to restrictions.

(a) Except as permitted under §1209.215 or §1209.220, a participant shall not knowingly do business under a covered transaction with a person who is—

(1) Debarred or suspended;

(2) Proposed for debarment under 48 CFR part 9, subpart 9.4; or

(3) Ineligible for or voluntarily excluded from the covered transaction.

(b) Violation of the restriction under paragraph (a) of this section may result in disallowance of costs, annulment or termination of award, issuance of a stop work order, debarment or suspension, or other remedies as appropriate.

(c) A participant may rely upon the certification of a prospective participant in a lower tier covered transaction that it and its principals are not debarred, suspended, proposed for debarment under 48 CFR part 9, subpart 9.4, ineligible, or voluntarily excluded

from the covered transaction (See Appendix B of these regulations), unless it knows that the certification is erroneous. An agency has the burden of proof that a participant did knowingly do business with a person that filed an erroneous certification.

[60 FR 33041, 33058, June 26, 1995]

Subpart C—Debarment

§ 1209.300 General.

The debarring official may debar a person for any of the causes in § 1209.305, using procedures established in §§ 1209.310 through 1209.314. The existence of a cause for debarment, however, does not necessarily require that the person be debarred; the seriousness of the person's acts or omissions and any mitigating factors shall be considered in making any debarment decision.

§ 1209.305 Causes for debarment.

Debarment may be imposed in accordance with the provisions of §§ 1209.300 through 1209.314 for:

(a) Conviction of or civil judgment for:

(1) Commission of fraud or a criminal offense in connection with obtaining, attempting to obtain, or performing a public or private agreement or transaction;

(2) Violation of Federal or State antitrust statutes, including those proscribing price fixing between competitors, allocation of customers between competitors, and bid rigging;

(3) Commission of embezzlement, theft, forgery, bribery, falsification or destruction of records, making false statements, receiving stolen property, making false claims, or obstruction of justice; or

(4) Commission of any other offense indicating a lack of business integrity or business honesty that seriously and directly affects the present responsibility of a person.

(b) Violation of the terms of a public agreement or transaction so serious as to affect the integrity of an agency program, such as:

(1) A willful failure to perform in accordance with the terms of one or more public agreements or transactions;

(2) A history of failure to perform or of unsatisfactory performance of one or more public agreements or transactions; or

(3) A willful violation of a statutory or regulatory provision or requirement applicable to a public agreement or transaction.

(c) Any of the following causes:

(1) A nonprocurement debarment by any Federal agency taken before October 1, 1988, the effective date of these regulations, or a procurement debarment by any Federal agency taken pursuant to 48 CFR subpart 9.4;

(2) Knowingly doing business with a debarred, suspended, ineligible, or voluntarily excluded person, in connection with a covered transaction, except as permitted in § 1209.215 or § 1209.220;

(3) Failure to pay a single substantial debt, or a number of outstanding debts (including disallowed costs and overpayments, but not including sums owed the Federal Government under the Internal Revenue Code) owed to any Federal agency or instrumentality, provided the debt is uncontested by the debtor or, if contested, provided that the debtor's legal and administrative remedies have been exhausted;

(4) Violation of a material provision of a voluntary exclusion agreement entered into under § 1209.315 or of any settlement of a debarment or suspension action; or

(5) Violation of any requirement of subpart F of this part, relating to providing a drug-free workplace, as set forth in § 1209.615 of this part.

(d) Any other cause of so serious or compelling a nature that it affects the present responsibility of a person.

[53 FR 19193, 19194, 19204, May 26, 1988, as amended at 54 FR 4950, 4961, Jan. 31, 1989]

§ 1209.310 Procedures.

NARA shall process debarment actions as informally as practicable, consistent with the principles of fundamental fairness, using the procedures in §§ 1209.311 through 1209.314.

§ 1209.311 Investigation and referral.

Information concerning the existence of a cause for debarment from any

source shall be promptly reported, investigated, and referred, when appropriate, to the debarring official for consideration. After consideration, the debarring official may issue a notice of proposed debarment.

§1209.312 Notice of proposed debarment.

A debarment proceeding shall be initiated by notice to the respondent advising:

(a) That debarment is being considered;

(b) Of the reasons for the proposed debarment in terms sufficient to put the respondent on notice of the conduct or transaction(s) upon which it is based;

(c) Of the cause(s) relied upon under §1209.305 for proposing debarment;

(d) Of the provisions of §1209.311 through §1209.314, and any other NARA procedures, if applicable, governing debarment decisionmaking; and

(e) Of the potential effect of a debarment.

§1209.313 Opportunity to contest proposed debarment.

(a) *Submission in opposition.* Within 30 days after receipt of the notice of proposed debarment, the respondent may submit, in person, in writing, or through a representative, information and argument in opposition to the proposed debarment.

(b) *Additional proceedings as to disputed material facts.* (1) In actions not based upon a conviction or civil judgment, if the debarring official finds that the respondent's submission in opposition raises a genuine dispute over facts material to the proposed debarment, respondent(s) shall be afforded an opportunity to appear with a representative, submit documentary evidence, present witnesses, and confront any witness the agency presents.

(2) A transcribed record of any additional proceedings shall be made available at cost to the respondent, upon request, unless the respondent and the agency, by mutual agreement, waive the requirement for a transcript.

§1209.314 Debarring official's decision.

(a) *No additional proceedings necessary.* In actions based upon a conviction or civil judgment, or in which there is no genuine dispute over material facts, the debarring official shall make a decision on the basis of all the information in the administrative record, including any submission made by the respondent. The decision shall be made within 45 days after receipt of any information and argument submitted by the respondent, unless the debarring official extends this period for good cause.

(b) *Additional proceedings necessary.* (1) In actions in which additional proceedings are necessary to determine disputed material facts, written findings of fact shall be prepared. The debarring official shall base the decision on the facts as found, together with any information and argument submitted by the respondent and any other information in the administrative record.

(2) The debarring official may refer disputed material facts to another official for findings of fact. The debarring official may reject any such findings, in whole or in part, only after specifically determining them to be arbitrary and capricious or clearly erroneous.

(3) The debarring official's decision shall be made after the conclusion of the proceedings with respect to disputed facts.

(c)(1) *Standard of proof.* In any debarment action, the cause for debarment must be established by a preponderance of the evidence. Where the proposed debarment is based upon a conviction or civil judgment, the standard shall be deemed to have been met.

(2) *Burden of proof.* The burden of proof is on the agency proposing debarment.

(d) *Notice of debarring official's decision.* (1) If the debarring official decides to impose debarment, the respondent shall be given prompt notice:

(i) Referring to the notice of proposed debarment;

(ii) Specifying the reasons for debarment;

(iii) Stating the period of debarment, including effective dates; and

(iv) Advising that the debarment is effective for covered transactions throughout the executive branch of the Federal Government unless an agency head or an authorized designee makes

the determination referred to in § 1209.215.

(2) If the debarring official decides not to impose debarment, the respondent shall be given prompt notice of that decision. A decision not to impose debarment shall be without prejudice to a subsequent imposition of debarment by any other agency.

§ 1209.315 Settlement and voluntary exclusion.

(a) When in the best interest of the Government, NARA may, at any time, settle a debarment or suspension action.

(b) If a participant and the agency agree to a voluntary exclusion of the participant, such voluntary exclusion shall be entered on the Nonprocurement List (see subpart E).

§ 1209.320 Period of debarment.

(a) Debarment shall be for a period commensurate with the seriousness of the cause(s). If a suspension precedes a debarment, the suspension period shall be considered in determining the debarment period.

(1) Debarment for causes other than those related to a violation of the requirements of subpart F of this part generally should not exceed three years. Where circumstances warrant, a longer period of debarment may be imposed.

(2) In the case of a debarment for a violation of the requirements of subpart F of this part (*see* § 1209.305(c)(5)), the period of debarment shall not exceed five years.

(b) The debarring official may extend an existing debarment for an additional period, if that official determines that an extension is necessary to protect the public interest. However, a debarment may not be extended solely on the basis of the facts and circumstances upon which the initial debarment action was based. If debarment for an additional period is determined to be necessary, the procedures of §§ 1209.311 through 1209.314 shall be followed to extend the debarment.

(c) The respondent may request the debarring official to reverse the debarment decision or to reduce the period or scope of debarment. Such a request shall be in writing and supported by documentation. The debarring official may grant such a request for reasons including, but not limited to:

(1) Newly discovered material evidence;

(2) Reversal of the conviction or civil judgment upon which the debarment was based;

(3) Bona fide change in ownership or management;

(4) Elimination of other causes for which the debarment was imposed; or

(5) Other reasons the debarring official deems appropriate.

[53 FR 19193, 19194, 19204, May 26, 1988, as amended at 54 FR 4950, 4961, Jan. 31, 1989]

§ 1209.325 Scope of debarment.

(a) *Scope in general.* (1) Debarment of a person under these regulations constitutes debarment of all its divisions and other organizational elements from all covered transactions, unless the debarment decision is limited by its terms to one or more specifically identified individuals, divisions or other organizational elements or to specific types of transactions.

(2) The debarment action may include any affiliate of the participant that is specifically named and given notice of the proposed debarment and an opportunity to respond (see §§ 1209.311 through 1209.314).

(b) *Imputing conduct.* For purposes of determining the scope of debarment, conduct may be imputed as follows:

(1) *Conduct imputed to participant.* The fraudulent, criminal or other seriously improper conduct of any officer, director, shareholder, partner, employee, or other individual associated with a participant may be imputed to the participant when the conduct occurred in connection with the individual's performance of duties for or on behalf of the participant, or with the participant's knowledge, approval, or acquiescence. The participant's acceptance of the benefits derived from the conduct shall be evidence of such knowledge, approval, or acquiescence.

(2) *Conduct imputed to individuals associated with participant.* The fraudulent, criminal, or other seriously improper

conduct of a participant may be imputed to any officer, director, shareholder, partner, employee, or other individual associated with the participant who participated in, knew of, or had reason to know of the participant's conduct.

(3) *Conduct of one participant imputed to other participants in a joint venture.* The fraudulent, criminal, or other seriously improper conduct of one participant in a joint venture, grant pursuant to a joint application, or similar arrangement may be imputed to other participants if the conduct occurred for or on behalf of the joint venture, grant pursuant to a joint application, or similar arrangement may be imputed to other participants if the conduct occurred for or on behalf of the joint venture, grant pursuant to a joint application, or similar arrangement or with the knowledge, approval, or acquiescence of these participants. Acceptance of the benefits derived from the conduct shall be evidence of such knowledge, approval, or acquiescence.

Subpart D—Suspension

§1209.400 General.

(a) The suspending official may suspend a person for any of the causes in §1209.405 using procedures established in §§1209.410 through 1209.413.

(b) Suspension is a serious action to be imposed only when:

(1) There exists adequate evidence of one or more of the causes set out in §1209.405, and

(2) Immediate action is necessary to protect the public interest.

(c) In assessing the adequacy of the evidence, the agency should consider how much information is available, how credible it is given the circumstances, whether or not important allegations are corroborated, and what inferences can reasonably be drawn as a result. This assessment should include an examination of basic documents such as grants, cooperative agreements, loan authorizations, and contracts.

§1209.405 Causes for suspension.

(a) Suspension may be imposed in accordance with the provisions of §§1209.400 through 1209.413 upon adequate evidence:

(1) To suspect the commission of an offense listed in §1209.305(a); or

(2) That a cause for debarment under §1209.305 may exist.

(b) Indictment shall constitute adequate evidence for purposes of suspension actions.

§1209.410 Procedures.

(a) *Investigation and referral.* Information concerning the existence of a cause for suspension from any source shall be promptly reported, investigated, and referred, when appropriate, to the suspending official for consideration. After consideration, the suspending official may issue a notice of suspension.

(b) *Decisionmaking process.* NARA shall process suspension actions as informally as practicable, consistent with principles of fundamental fairness, using the procedures in §1209.411 through §1209.413.

§1209.411 Notice of suspension.

When a respondent is suspended, notice shall immediately be given:

(a) That suspension has been imposed;

(b) That the suspension is based on an indictment, conviction, or other adequate evidence that the respondent has committed irregularities seriously reflecting on the propriety of further Federal Government dealings with the respondent;

(c) Describing any such irregularities in terms sufficient to put the respondent on notice without disclosing the Federal Government's evidence;

(d) Of the cause(s) relied upon under §1209.405 for imposing suspension;

(e) That the suspension is for a temporary period pending the completion of an investigation or ensuing legal, debarment, or Program Fraud Civil Remedies Act proceedings;

(f) Of the provisions of §1209.411 through §1209.413 and any other NARA procedures, if applicable, governing suspension decisionmaking; and

(g) Of the effect of the suspension.

§ 1209.412 Opportunity to contest suspension.

(a) *Submission in opposition.* Within 30 days after receipt of the notice of suspension, the respondent may submit, in person, in writing, or through a representative, information and argument in opposition to the suspension.

(b) *Additional proceedings as to disputed material facts.* (1) If the suspending official finds that the respondent's submission in opposition raises a genuine dispute over facts material to the suspension, respondent(s) shall be afforded an opportunity to appear with a representative, submit documentary evidence, present witnesses, and confront any witness the agency presents, unless:

(i) The action is based on an indictment, conviction or civil judgment, or

(ii) A determination is made, on the basis of Department of Justice advice, that the substantial interests of the Federal Government in pending or contemplated legal proceedings based on the same facts as the suspension would be prejudiced.

(2) A transcribed record of any additional proceedings shall be prepared and made available at cost to the respondent, upon request, unless the respondent and the agency, by mutual agreement, waive the requirement for a transcript.

§ 1209.413 Suspending official's decision.

The suspending official may modify or terminate the suspension (for example, see § 1209.320(c) for reasons for reducing the period or scope of debarment) or may leave it in force. However, a decision to modify or terminate the suspension shall be without prejudice to the subsequent imposition of suspension by any other agency or debarment by any agency. The decision shall be rendered in accordance with the following provisions:

(a) *No additional proceedings necessary.* In actions: based on an indictment, conviction, or civil judgment; in which there is no genuine dispute over material facts; or in which additional proceedings to determine disputed material facts have been denied on the basis of Department of Justice advice, the suspending official shall make a decision on the basis of all the information in the administrative record, including any submission made by the respondent. The decision shall be made within 45 days after receipt of any information and argument submitted by the respondent, unless the suspending official extends this period for good cause.

(b) *Additional proceedings necessary.* (1) In actions in which additional proceedings are necessary to determine disputed material facts, written findings of fact shall be prepared. The suspending official shall base the decision on the facts as found, together with any information and argument submitted by the respondent and any other information in the administrative record.

(2) The suspending official may refer matters involving disputed material facts to another official for findings of fact. The suspending official may reject any such findings, in whole or in part, only after specifically determining them to be arbitrary or capricious or clearly erroneous.

(c) *Notice of suspending official's decision.* Prompt written notice of the suspending official's decision shall be sent to the respondent.

§ 1209.415 Period of suspension.

(a) Suspension shall be for a temporary period pending the completion of an investigation or ensuing legal, debarment, or Program Fraud Civil Remedies Act proceedings, unless terminated sooner by the suspending official or as provided in paragraph (b) of this section.

(b) If legal or administrative proceedings are not initiated within 12 months after the date of the suspension notice, the suspension shall be terminated unless an Assistant Attorney General or United States Attorney requests its extension in writing, in which case it may be extended for an additional six months. In no event may a suspension extend beyond 18 months, unless such proceedings have been initiated within that period.

(c) The suspending official shall notify the Department of Justice of an impending termination of a suspension, at least 30 days before the 12-month period expires, to give that Department an opportunity to request an extension.

§1209.420 Scope of suspension.

The scope of a suspension is the same as the scope of a debarment (see §1209.325), except that the procedures of §§1209.410 through 1209.413 shall be used in imposing a suspension.

Subpart E—Responsibilities of GSA, Agency and Participants

§1209.500 GSA responsibilities.

(a) In accordance with the OMB guidelines, GSA shall compile, maintain, and distribute a list of all persons who have been debarred, suspended, or voluntarily excluded by agencies under Executive Order 12549 and these regulations, and those who have been determined to be ineligible.

(b) At a minimum, this list shall indicate:

(1) The names and addresses of all debarred, suspended, ineligible, and voluntarily excluded persons, in alphabetical order, with cross-references when more than one name is involved in a single action;

(2) The type of action;

(3) The cause for the action;

(4) The scope of the action;

(5) Any termination date for each listing; and

(6) The agency and name and telephone number of the agency point of contact for the action.

§1209.505 NARA responsibilities.

(a) The agency shall provide GSA with current information concerning debarments, suspension, determinations of ineligibility, and voluntary exclusions it has taken. Until February 18, 1989, the agency shall also provide GSA and OMB with information concerning all transactions in which NARA has granted exceptions under §1209.215 permitting participation by debarred, suspended, or voluntarily excluded persons.

(b) Unless an alternative schedule is agreed to by GSA, the agency shall advise GSA of the information set forth in §1209.500(b) and of the exceptions granted under §1209.215 within five working days after taking such actions.

(c) The agency shall direct inquiries concerning listed persons to the agency that took the action.

(d) Agency officials shall check the Nonprocurement List before entering covered transactions to determine whether a participant in a primary transaction is debarred, suspended, ineligible, or voluntarily excluded (Tel. #).

(e) Agency officials shall check the Nonprocurement List before approving principals or lower tier participants where agency approval of the principal or lower tier participant is required under the terms of the transaction, to determine whether such principals or participants are debarred, suspended, ineligible, or voluntarily excluded.

§1209.510 Participants' responsibilities.

(a) *Certification by participants in primary covered transactions.* Each participant shall submit the certification in appendix A to this part for it and its principals at the time the participant submits its proposal in connection with a primary covered transaction, except that States need only complete such certification as to their principals. Participants may decide the method and frequency by which they determine the eligibility of their principals. In addition, each participant may, but is not required to, check the Nonprocurement List for its principals (Tel. #). Adverse information on the certification will not necessarily result in denial of participation. However, the certification, and any additional information pertaining to the certification submitted by the participant, shall be considered in the administration of covered transactions.

(b) *Certification by participants in lower tier covered transactions.* (1) Each participant shall require participants in lower tier covered transactions to include the certification in appendix B to this part for it and its principals in any proposal submitted in connection with such lower tier covered transactions.

(2) A participant may rely upon the certification of a prospective participant in a lower tier covered transaction that it and its principals are not

debarred, suspended, ineligible, or voluntarily excluded from the covered transaction by any Federal agency, unless it knows that the certification is erroneous. Participants may decide the method and frequency by which they determine the eligiblity of their principals. In addition, a participant may, but is not required to, check the Nonprocurement List for its principals and for participants (Tel.).

(c) *Changed circumstances regarding certification.* A participant shall provide immediate written notice to NARA if at any time the participant learns that its certification was erroneous when submitted or has become erroneous by reason of changed circumstances. Participants in lower tier covered transactions shall provide the same updated notice to the participant to which it submitted its proposals.

Subpart F—Drug-Free Workplace Requirements (Grants)

SOURCE: 55 FR 21688, 21700, May 25, 1990, unless otherwise noted.

§ 1209.600 Purpose.

(a) The purpose of this subpart is to carry out the Drug-Free Workplace Act of 1988 by requiring that—

(1) A grantee, other than an individual, shall certify to the agency that it will provide a drug-free workplace;

(2) A grantee who is an individual shall certify to the agency that, as a condition of the grant, he or she will not engage in the unlawful manufacture, distribution, dispensing, possession or use of a controlled substance in conducting any activity with the grant.

(b) Requirements implementing the Drug-Free Workplace Act of 1988 for contractors with the agency are found at 48 CFR subparts 9.4, 23.5, and 52.2.

§ 1209.605 Definitions.

(a) Except as amended in this section, the definitions of § 1209.105 apply to this subpart.

(b) For purposes of this subpart—

(1) *Controlled substance* means a controlled substance in schedules I through V of the Controlled Substances Act (21 U.S.C. 812), and as further defined by regulation at 21 CFR 1308.11 through 1308.15;

(2) *Conviction* means a finding of guilt (including a plea of nolo contendere) or imposition of sentence, or both, by any judicial body charged with the responsibility to determine violations of the Federal or State criminal drug statutes;

(3) *Criminal drug statute* means a Federal or non-Federal criminal statute involving the manufacture, distribution, dispensing, use, or possession of any controlled substance;

(4) *Drug-free workplace* means a site for the performance of work done in connection with a specific grant at which employees of the grantee are prohibited from engaging in the unlawful manufacture, distribution, dispensing, possession, or use of a controlled substance;

(5) *Employee* means the employee of a grantee directly engaged in the performance of work under the grant, including:

(i) All *direct charge* employees;

(ii) All *indirect charge* employees, unless their impact or involvement is insignificant to the performance of the grant; and,

(iii) Temporary personnel and consultants who are directly engaged in the performance of work under the grant and who are on the grantee's payroll.

This definition does not include workers not on the payroll of the grantee (e.g., volunteers, even if used to meet a matching requirement; consultants or independent contractors not on the payroll; or employees of subrecipients or subcontractors in covered workplaces);

(6) *Federal agency* or *agency* means any United States executive department, military department, government corporation, government controlled corporation, any other establishment in the executive branch (including the Executive Office of the President), or any independent regulatory agency;

(7) *Grant* means an award of financial assistance, including a cooperative agreement, in the form of money, or property in lieu of money, by a Federal agency directly to a grantee. The term

grant includes block grant and entitlement grant programs, whether or not exempted from coverage under the grants management government-wide common rule on uniform administrative requirements for grants and cooperative agreements. The term does not include technical assistance that provides services instead of money, or other assistance in the form of loans, loan guarantees, interest subsidies, insurance, or direct appropriations; or any veterans' benefits to individuals, i.e., any benefit to veterans, their families, or survivors by virtue of the service of a veteran in the Armed Forces of the United States;

(8) *Grantee* means a person who applies for or receives a grant directly from a Federal agency (except another Federal agency);

(9) *Individual* means a natural person;

(10) *State* means any of the States of the United States, the District of Columbia, the Commonwealth of Puerto Rico, any territory or possession of the United States, or any agency of a State, exclusive of institutions of higher education, hospitals, and units of local government. A State instrumentality will be considered part of the State government if it has a written determination from a State government that such State considers the instrumentality to be an agency of the State government.

§1209.610 Coverage.

(a) This subpart applies to any grantee of the agency.

(b) This subpart applies to any grant, except where application of this subpart would be inconsistent with the international obligations of the United States or the laws or regulations of a foreign government. A determination of such inconsistency may be made only by the agency head or his/her designee.

(c) The provisions of subparts A, B, C, D and E of this part apply to matters covered by this subpart, except where specifically modified by this subpart. In the event of any conflict between provisions of this subpart and other provisions of this part, the provisions of this subpart are deemed to control with respect to the implementation of drug-free workplace requirements concerning grants.

§1209.615 Grounds for suspension of payments, suspension or termination of grants, or suspension or debarment.

A grantee shall be deemed in violation of the requirements of this subpart if the agency head or his or her official designee determines, in writing, that—

(a) The grantee has made a false certification under §1209.630;

(b) With respect to a grantee other than an individual—

(1) The grantee has violated the certification by failing to carry out the requirements of paragraphs (A)(a)–(g) and/or (B) of the certification (alternate I to appendix C) or

(2) Such a number of employees of the grantee have been convicted of violations of criminal drug statutes for violations occurring in the workplace as to indicate that the grantee has failed to make a good faith effort to provide a drug-free workplace.

(c) With respect to a grantee who is an individual—

(1) The grantee has violated the certification by failing to carry out its requirements (alternate II to appendix C); or

(2) The grantee is convicted of a criminal drug offense resulting from a violation occurring during the conduct of any grant activity.

§1209.620 Effect of violation.

(a) In the event of a violation of this subpart as provided in §1209.615, and in accordance with applicable law, the grantee shall be subject to one or more of the following actions:

(1) Suspension of payments under the grant;

(2) Suspension or termination of the grant; and

(3) Suspension or debarment of the grantee under the provisions of this part.

(b) Upon issuance of any final decision under this part requiring debarment of a grantee, the debarred grantee shall be ineligible for award of any grant from any Federal agency for a period specified in the decision, not to

exceed five years (*see* § 1209.320(a)(2) of this part).

§ 1209.625 Exception provision.

The agency head may waive with respect to a particular grant, in writing, a suspension of payments under a grant, suspension or termination of a grant, or suspension or debarment of a grantee if the agency head determines that such a waiver would be in the public interest. This exception authority cannot be delegated to any other official.

§ 1209.630 Certification requirements and procedures.

(a)(1) As a prior condition of being awarded a grant, each grantee shall make the appropriate certification to the Federal agency providing the grant, as provided in appendix C to this part.

(2) Grantees are not required to make a certification in order to continue receiving funds under a grant awarded before March 18, 1989, or under a no-cost time extension of such a grant. However, the grantee shall make a one-time drug-free workplace certification for a non-automatic continuation of such a grant made on or after March 18, 1989.

(b) Except as provided in this section, all grantees shall make the required certification for each grant. For mandatory formula grants and entitlements that have no application process, grantees shall submit a one-time certification in order to continue receiving awards.

(c) A grantee that is a State may elect to make one certification in each Federal fiscal year. States that previously submitted an annual certification are not required to make a certification for Fiscal Year 1990 until June 30, 1990. Except as provided in paragraph (d) of this section, this certification shall cover all grants to all State agencies from any Federal agency. The State shall retain the original of this statewide certification in its Governor's office and, prior to grant award, shall ensure that a copy is submitted individually with respect to each grant, unless the Federal agency has designated a central location for submission.

(d)(1) The Governor of a State may exclude certain State agencies from the statewide certification and authorize these agencies to submit their own certifications to Federal agencies. The statewide certification shall name any State agencies so excluded.

(2) A State agency to which the statewide certification does not apply, or a State agency in a State that does not have a statewide certification, may elect to make one certification in each Federal fiscal year. State agencies that previously submitted a State agency certification are not required to make a certification for Fiscal Year 1990 until June 30, 1990. The State agency shall retain the original of this State agency-wide certification in its central office and, prior to grant award, shall ensure that a copy is submitted individually with respect to each grant, unless the Federal agency designates a central location for submission.

(3) When the work of a grant is done by more than one State agency, the certification of the State agency directly receiving the grant shall be deemed to certify compliance for all workplaces, including those located in other State agencies.

(e)(1) For a grant of less than 30 days performance duration, grantees shall have this policy statement and program in place as soon as possible, but in any case by a date prior to the date on which performance is expected to be completed.

(2) For a grant of 30 days or more performance duration, grantees shall have this policy statement and program in place within 30 days after award.

(3) Where extraordinary circumstances warrant for a specific grant, the grant officer may determine a different date on which the policy statement and program shall be in place.

§ 1209.635 Reporting of and employee sanctions for convictions of criminal drug offenses.

(a) When a grantee other than an individual is notified that an employee has been convicted for a violation of a criminal drug statute occurring in the workplace, it shall take the following actions:

(1) Within 10 calendar days of receiving notice of the conviction, the grantee shall provide written notice, including the convicted employee's position title, to every grant officer, or other designee on whose grant activity the convicted employee was working, unless a Federal agency has designated a central point for the receipt of such notifications. Notification shall include the identification number(s) for each of the Federal agency's affected grants.

(2) Within 30 calendar days of receiving notice of the conviction, the grantee shall do the following with respect to the employee who was convicted.

(i) Take appropriate personnel action against the employee, up to and including termination, consistent with requirements of the Rehabilitation Act of 1973, as amended; or

(ii) Require the employee to participate satisfactorily in a drug abuse assistance or rehabilitation program approved for such purposes by a Federal, State, or local health, law enforcement, or other appropriate agency.

(b) A grantee who is an individual who is convicted for a violation of a criminal drug statute occurring during the conduct of any grant activity shall report the conviction, in writing, within 10 calendar days, to his or her Federal agency grant officer, or other designee, unless the Federal agency has designated a central point for the receipt of such notices. Notification shall include the identification number(s) for each of the Federal agency's affected grants.

(Approved by the Office of Management and Budget under control number 0991–0002)

APPENDIX A TO PART 1209—CERTIFICATION REGARDING DEBARMENT, SUSPENSION, AND OTHER RESPONSIBILITY MATTERS—PRIMARY COVERED TRANSACTIONS

Instructions for Certification

1. By signing and submitting this proposal, the prospective primary participant is providing the certification set out below.

2. The inability of a person to provide the certification required below will not necessarily result in denial of participation in this covered transaction. The prospective participant shall submit an explanation of why it cannot provide the certification set out below. The certification or explanation will be considered in connection with the department or agency's determination whether to enter into this transaction. However, failure of the prospective primary participant to furnish a certification or an explanation shall disqualify such person from participation in this transaction.

3. The certification in this clause is a material representation of fact upon which reliance was placed when the department or agency determined to enter into this transaction. If it is later determined that the prospective primary participant knowingly rendered an erroneous certification, in addition to other remedies available to the Federal Government, the department or agency may terminate this transaction for cause or default.

4. The prospective primary participant shall provide immediate written notice to the department or agency to which this proposal is submitted if at any time the prospective primary participant learns that its certification was erroneous when submitted or has become erroneous by reason of changed circumstances.

5. The terms *covered transaction, debarred, suspended, ineligible, lower tier covered transaction, participant, person, primary covered transaction, principal, proposal, and voluntarily excluded,* as used in this clause, have the meanings set out in the Definitions and Coverage sections of the rules implementing Executive Order 12549. You may contact the department or agency to which this proposal is being submitted for assistance in obtaining a copy of those regulations.

6. The prospective primary participant agrees by submitting this proposal that, should the proposed covered transaction be entered into, it shall not knowingly enter into any lower tier covered transaction with a person who is proposed for debarment under 48 CFR part 9, subpart 9.4, debarred, suspended, declared ineligible, or voluntarily excluded from participation in this covered transaction, unless authorized by the department or agency entering into this transaction.

7. The prospective primary participant further agrees by submitting this proposal that it will include the clause titled ''Certification Regarding Debarment, Suspension, Ineligibility and Voluntary Exclusion-Lower Tier Covered Transaction,'' provided by the department or agency entering into this covered transaction, without modification, in all lower tier covered transactions and in all solicitations for lower tier covered transactions.

8. A participant in a covered transaction may rely upon a certification of a prospective participant in a lower tier covered transaction that it is not proposed for debarment under 48 CFR part 9, subpart 9.4, debarred, suspended, ineligible, or voluntarily excluded from the covered transaction, unless it knows that the certification is erroneous. A participant may decide the

method and frequency by which it determines the eligibility of its principals. Each participant may, but is not required to, check the List of Parties Excluded from Federal Procurement and Nonprocurement Programs.

9. Nothing contained in the foregoing shall be construed to require establishment of a system of records in order to render in good faith the certification required by this clause. The knowledge and information of a participant is not required to exceed that which is normally possessed by a prudent person in the ordinary course of business dealings.

10. Except for transactions authorized under paragraph 6 of these instructions, if a participant in a covered transaction knowingly enters into a lower tier covered transaction with a person who is proposed for debarment under 48 CFR part 9, subpart 9.4, suspended, debarred, ineligible, or voluntarily excluded from participation in this transaction, in addition to other remedies available to the Federal Government, the department or agency may terminate this transaction for cause or default.

Certification Regarding Debarment, Suspension, and Other Responsibility Matters—Primary Covered Transactions

(1) The prospective primary participant certifies to the best of its knowledge and belief, that it and its principals:

(a) Are not presently debarred, suspended, proposed for debarment, declared ineligible, or voluntarily excluded by any Federal department or agency;

(b) Have not within a three-year period preceding this proposal been convicted of or had a civil judgment rendered against them for commission of fraud or a criminal offense in connection with obtaining, attempting to obtain, or performing a public (Federal, State or local) transaction or contract under a public transaction; violation of Federal or State antitrust statutes or commission of embezzlement, theft, forgery, bribery, falsification or destruction of records, making false statements, or receiving stolen property;

(c) Are not presently indicted for or otherwise criminally or civilly charged by a governmental entity (Federal, State or local) with commission of any of the offenses enumerated in paragraph (1)(b) of this certification; and

(d) Have not within a three-year period preceding this application/proposal had one or more public transactions (Federal, State or local) terminated for cause or default.

(2) Where the prospective primary participant is unable to certify to any of the statements in this certification, such prospective participant shall attach an explanation to this proposal.

[60 FR 33042, 33058, June 26, 1995]

APPENDIX B TO PART 1209—CERTIFICATION REGARDING DEBARMENT, SUSPENSION, INELIGIBILITY AND VOLUNTARY EXCLUSION—LOWER TIER COVERED TRANSACTIONS

Instructions for Certification

1. By signing and submitting this proposal, the prospective lower tier participant is providing the certification set out below.

2. The certification in this clause is a material representation of fact upon which reliance was placed when this transaction was entered into. If it is later determined that the prospective lower tier participant knowingly rendered an erroneous certification, in addition to other remedies available to the Federal Government the department or agency with which this transaction originated may pursue available remedies, including suspension and/or debarment.

3. The prospective lower tier participant shall provide immediate written notice to the person to which this proposal is submitted if at any time the prospective lower tier participant learns that its certification was erroneous when submitted or had become erroneous by reason of changed circumstances.

4. The terms *covered transaction, debarred, suspended, ineligible, lower tier covered transaction, participant, person, primary covered transaction, principal, proposal,* and *voluntarily excluded,* as used in this clause, have the meaning set out in the Definitions and Coverage sections of rules implementing Executive Order 12549. You may contact the person to which this proposal is submitted for assistance in obtaining a copy of those regulations.

5. The prospective lower tier participant agrees by submitting this proposal that, should the proposed covered transaction be entered into, it shall not knowingly enter into any lower tier covered transaction with a person who is proposed for debarment under 48 CFR part 9, subpart 9.4, debarred, suspended, declared ineligible, or voluntarily excluded from participation in this covered transaction, unless authorized by the department or agency with which this transaction originated.

6. The prospective lower tier participant further agrees by submitting this proposal that it will include this clause titled ''Certification Regarding Debarment, Suspension, Ineligibility and Voluntary Exclusion-Lower Tier Covered Transaction,'' without modification, in all lower tier covered transactions and in all solicitations for lower tier covered transactions.

7. A participant in a covered transaction may rely upon a certification of a prospective participant in a lower tier covered

transaction that it is not proposed for debarment under 48 CFR part 9, subpart 9.4, debarred, suspended, ineligible, or voluntarily excluded from covered transactions, unless it knows that the certification is erroneous. A participant may decide the method and frequency by which it determines the eligibility of its principals. Each participant may, but is not required to, check the List of Parties Excluded from Federal Procurement and Nonprocurement Programs.

8. Nothing contained in the foregoing shall be construed to require establishment of a system of records in order to render in good faith the certification required by this clause. The knowledge and information of a participant is not required to exceed that which is normally possessed by a prudent person in the ordinary course of business dealings.

9. Except for transactions authorized under paragraph 5 of these instructions, if a participant in a covered transaction knowingly enters into a lower tier covered transaction with a person who is proposed for debarment under 48 CFR part 9, subpart 9.4, suspended, debarred, ineligible, or voluntarily excluded from participation in this transaction, in addition to other remedies available to the Federal Government, the department or agency with which this transaction originated may pursue available remedies, including suspension and/or debarment.

Certification Regarding Debarment, Suspension, Ineligibility and Voluntary Exclusion—Lower Tier Covered Transactions

(1) The prospective lower tier participant certifies, by submission of this proposal, that neither it nor its principals is presently debarred, suspended, proposed for debarment, declared ineligible, or voluntarily excluded from participation in this transaction by any Federal department or agency.

(2) Where the prospective lower tier participant is unable to certify to any of the statements in this certification, such prospective participant shall attach an explanation to this proposal.

[60 FR 33042, 33058, June 26, 1995]

APPENDIX C TO PART 1209—CERTIFICATION REGARDING DRUG-FREE WORKPLACE REQUIREMENTS

Instructions for Certification

1. By signing and/or submitting this application or grant agreement, the grantee is providing the certification set out below.

2. The certification set out below is a material representation of fact upon which reliance is placed when the agency awards the grant. If it is later determined that the grantee knowingly rendered a false certification, or otherwise violates the requirements of the Drug-Free Workplace Act, the agency, in addition to any other remedies available to the Federal Government, may take action authorized under the Drug-Free Workplace Act.

3. For grantees other than individuals, Alternate I applies.

4. For grantees who are individuals, Alternate II applies.

5. Workplaces under grants, for grantees other than individuals, need not be identified on the certification. If known, they may be identified in the grant application. If the grantee does not identify the workplaces at the time of application, or upon award, if there is no application, the grantee must keep the identity of the workplace(s) on file in its office and make the information available for Federal inspection. Failure to identify all known workplaces constitutes a violation of the grantee's drug-free workplace requirements.

6. Workplace identifications must include the actual address of buildings (or parts of buildings) or other sites where work under the grant takes place. Categorical descriptions may be used (e.g., all vehicles of a mass transit authority or State highway department while in operation, State employees in each local unemployment office, performers in concert halls or radio studios).

7. If the workplace identified to the agency changes during the performance of the grant, the grantee shall inform the agency of the change(s), if it previously identified the workplaces in question (see paragraph five).

8. Definitions of terms in the Nonprocurement Suspension and Debarment common rule and Drug-Free Workplace common rule apply to this certification. Grantees' attention is called, in particular, to the following definitions from these rules:

Controlled substance means a controlled substance in Schedules I through V of the Controlled Substances Act (21 U.S.C. 812) and as further defined by regulation (21 CFR 1308.11 through 1308.15);

Conviction means a finding of guilt (including a plea of nolo contendere) or imposition of sentence, or both, by any judicial body charged with the responsibility to determine violations of the Federal or State criminal drug statutes;

Criminal drug statute means a Federal or non-Federal criminal statute involving the manufacture, distribution, dispensing, use, or possession of any controlled substance;

Employee means the employee of a grantee directly engaged in the performance of work under a grant, including: (i) All *direct charge* employees; (ii) All *indirect charge* employees unless their impact or involvement is insignificant to the performance of the grant; and, (iii) Temporary personnel and consultants who are directly engaged in the performance of work under the grant and who are on the grantee's payroll. This definition does not include workers not on the payroll

of the grantee (e.g., volunteers, even if used to meet a matching requirement; consultants or independent contractors not on the grantee's payroll; or employees of subrecipients or subcontractors in covered workplaces).

Certification Regarding Drug-Free Workplace Requirements

Alternate I. (Grantees Other Than Individuals)

A. The grantee certifies that it will or will continue to provide a drug-free workplace by:

(a) Publishing a statement notifying employees that the unlawful manufacture, distribution, dispensing, possession, or use of a controlled substance is prohibited in the grantee's workplace and specifying the actions that will be taken against employees for violation of such prohibition;

(b) Establishing an ongoing drug-free awareness program to inform employees about—

(1) The dangers of drug abuse in the workplace;

(2) The grantee's policy of maintaining a drug-free workplace;

(3) Any available drug counseling, rehabilitation, and employee assistance programs; and

(4) The penalties that may be imposed upon employees for drug abuse violations occurring in the workplace;

(c) Making it a requirement that each employee to be engaged in the performance of the grant be given a copy of the statement required by paragraph (a);

(d) Notifying the employee in the statement required by paragraph (a) that, as a condition of employment under the grant, the employee will—

(1) Abide by the terms of the statement; and

(2) Notify the employer in writing of his or her conviction for a violation of a criminal drug statute occurring in the workplace no later than five calendar days after such conviction;

(e) Notifying the agency in writing, within ten calendar days after receiving notice under paragraph (d)(2) from an employee or otherwise receiving actual notice of such conviction. Employers of convicted employees must provide notice, including position title, to every grant officer or other designee on whose grant activity the convicted employee was working, unless the Federal agency has designated a central point for the receipt of such notices. Notice shall include the identification number(s) of each affected grant;

(f) Taking one of the following actions, within 30 calendar days of receiving notice under paragraph (d)(2), with respect to any employee who is so convicted—

(1) Taking appropriate personnel action against such an employee, up to and including termination, consistent with the requirements of the Rehabilitation Act of 1973, as amended; or

(2) Requiring such employee to participate satisfactorily in a drug abuse assistance or rehabilitation program approved for such purposes by a Federal, State, or local health, law enforcement, or other appropriate agency;

(g) Making a good faith effort to continue to maintain a drug-free workplace through implementation of paragraphs (a), (b), (c), (d), (e) and (f).

B. The grantee may insert in the space provided below the site(s) for the performance of work done in connection with the specific grant:

Place of Performance (Street address, city, county, state, zip code)

__ _____

__ _____

__ _____

Check ☐ if there are workplaces on file that are not identified here.

Alternate II. (Grantees Who Are Individuals)

(a) The grantee certifies that, as a condition of the grant, he or she will not engage in the unlawful manufacture, distribution, dispensing, possession, or use of a controlled substance in conducting any activity with the grant;

(b) If convicted of a criminal drug offense resulting from a violation occurring during the conduct of any grant activity, he or she will report the conviction, in writing, within 10 calendar days of the conviction, to every grant officer or other designee, unless the Federal agency designates a central point for the receipt of such notices. When notice is made to such a central point, it shall include the identification number(s) of each affected grant.

[55 FR 21690, 21700, May 25, 1990]

PART 1210—UNIFORM ADMINISTRATIVE REQUIREMENTS FOR GRANTS AND AGREEMENTS WITH INSTITUTIONS OF HIGHER EDUCATION, HOSPITALS, AND OTHER NON-PROFIT ORGANIZATIONS

Subpart A—General

Sec.

1210.1 Purpose.
1210.2 Definitions.
1210.3 Effect on other issuances.
1210.4 Deviations.
1210.5 Subawards.

Subpart B—Pre-Award Requirements

1210.10 Purpose.
1210.11 Pre-award policies.
1210.12 Forms for applying for Federal assistance.
1210.13 Debarment and suspension.
1210.14 Special award conditions.
1210.15 Metric system of measurement.
1210.16 Resource Conservation and Recovery Act.
1210.17 Certifications and representations.

Subpart C—Post-Award Requirements

FINANCIAL AND PROGRAM MANAGEMENT

1210.20 Purpose of financial and program management.
1210.21 Standards for financial management systems.
1210.22 Payment.
1210.23 Cost sharing or matching.
1210.24 Program income.
1210.25 Revision of budget and program plans.
1210.26 Non-Federal audits.
1210.27 Allowable costs.
1210.28 Period of availability of funds.

PROPERTY STANDARDS

1210.30 Purpose of property standards.
1210.31 Insurance coverage.
1210.32 Real property.
1210.33 Federally-owned and exempt property.
1210.34 Equipment.
1210.35 Supplies and other expendable property.
1210.36 Intangible property.
1210.37 Property trust relationship.

PROCUREMENT STANDARDS

1210.40 Purpose of procurement standards.
1210.41 Recipient responsibilities.
1210.42 Codes of conduct.
1210.43 Competition.
1210.44 Procurement procedures.
1210.45 Cost and price analysis.
1210.46 Procurement records.
1210.47 Contract administration.
1210.48 Contract provisions.

REPORTS AND RECORDS

1210.50 Purpose of reports and records.
1210.51 Monitoring and reporting program performance.
1210.52 Financial reporting.
1210.53 Retention and access requirements for records.

TERMINATION AND ENFORCEMENT

1210.60 Purpose of termination and enforcement.
1210.61 Termination.
1210.62 Enforcement.

Subpart D—After-the-Award Requirements

1210.70 Purpose.
1210.71 Closeout procedures.
1210.72 Subsequent adjustments and continuing responsibilities.
1210.73 Collection of amounts due.

APPENDIX A TO PART 1210—CONTRACT PROVISIONS

AUTHORITY: 44 U.S.C. 2104(a); 44 U.S.C. 2501–2506.

SOURCE: 60 FR 53515, Oct. 16, 1995, unless otherwise noted.

Subpart A—General

§1210.1 Purpose.

This part establishes uniform administrative requirements for NHPRC grants and agreements awarded to institutions of higher education, hospitals, and other non-profit organizations. Non-profit organizations that implement NHPRC programs for the States are also subject to State requirements.

§1210.2 Definitions.

(a) *Accrued expenditures* means the charges incurred by the recipient during a given period requiring the provision of funds for:

(1) Goods and other tangible property received;

(2) Services performed by employees, contractors, subrecipients, and other payees; and,

(3) Other amounts becoming owed under programs for which no current services or performance is required.

(b) *Accrued income* means the sum of:

(1) Earnings during a given period from

(i) Services performed by the recipient, and

(ii) Goods and other tangible property delivered to purchasers, and

(2) Amounts becoming owed to the recipient for which no current services or performance is required by the recipient.

(c) *Acquisition cost of equipment* means the net invoice price of the equipment, including the cost of modifications, attachments, accessories, or auxiliary apparatus necessary to make the property usable for the purpose for which it was acquired. Other charges, such as

the cost of installation, transportation, taxes, duty or protective in-transit insurance, shall be included or excluded from the unit acquisition cost in accordance with the recipient's regular accounting practices.

(d) *Advance* means a payment made by Treasury check or other appropriate payment mechanism to a recipient upon its request either before outlays are made by the recipient or through the use of predetermined payment schedules.

(e) *Award* means financial assistance that provides support or stimulation to accomplish a public purpose. Awards include grants and other agreements in the form of money or property in lieu of money, by the NHPRC to an eligible recipient. The term does not include: technical assistance, which provides services instead of money; other assistance in the form of loans, loan guarantees, interest subsidies, or insurance; direct payments of any kind to individuals; and, contracts which are required to be entered into and administered under procurement laws and regulations.

(f) *Cash contributions* means the recipient's cash outlay, including the outlay of money contributed to the recipient by third parties.

(g) *Closeout* means the process by which the NHPRC determines that all applicable administrative actions and all required work of the award have been completed by the recipient and the NHPRC.

(h) *Contract* means a procurement contract under an award or subaward, and a procurement subcontract under a recipient's or subrecipient's contract.

(i) *Cost sharing or matching* means that portion of project or program costs not borne by the NHPRC.

(j) *Date of completion* means the date on which all work under an award is completed or the date on the award document, or any supplement or amendment thereto, on which NHPRC sponsorship ends.

(k) *Disallowed costs* means those charges to an award that the NHPRC determines to be unallowable, in accordance with the applicable Federal cost principles or other terms and conditions contained in the award.

(l) *Equipment* means tangible nonexpendable personal property including exempt property charged directly to the award having a useful life of more than one year and an acquisition cost of $5,000 or more per unit. However, consistent with recipient policy, lower limits may be established.

(m) *Excess property* means property under the control of the NHPRC that, as determined by the head thereof, is no longer required for its needs or the discharge of its responsibilities.

(n) *Exempt property* means tangible personal property acquired in whole or in part with NHPRC funds, where the NHPRC has statutory authority to vest title in the recipient without further obligation to the Federal Government. An example of exempt property authority is contained in the Federal Grant and Cooperative Agreement Act (31 U.S.C. 6306), for property acquired under an award to conduct basic or applied research by a non-profit institution of higher education or non-profit organization whose principal purpose is conducting scientific research.

(o) *Federal awarding agency* means the Federal agency that provides an award to the recipient.

(p) *Federal funds authorized* means the total amount of NHPRC funds obligated by the Federal Government for use by the recipient. This amount may include any authorized carryover of unobligated funds from prior funding periods when permitted by NHPRC regulations or NHPRC implementing instructions.

(q) *Federal share of real property, equipment, or supplies* means that percentage of the property's acquisition costs and any improvement expenditures paid with NHPRC funds.

(r) *Funding period* means the period of time when NHPRC funding is available for obligation by the recipient.

(s) *Intangible property and debt instruments* means, but is not limited to, trademarks, copyrights, patents and patent applications and such property as loans, notes and other debt instruments, lease agreements, stock and other instruments of property ownership, whether considered tangible or intangible.

(t) *NARA* means the National Archives and Records Administration.

(u) *NHPRC* means the National Historical Publications and Records Commission.

(v) *Obligations* means the amounts of orders placed, contracts and grants awarded, services received and similar transactions during a given period that require payment by the recipient during the same or a future period.

(w) *Outlays or expenditures* means charges made to the project or program. They may be reported on a cash or accrual basis. For reports prepared on a cash basis, outlays are the sum of cash disbursements for direct charges for goods and services, the amount of indirect expense charged, the value of third party in-kind contributions applied and the amount of cash advances and payments made to subrecipients. For reports prepared on an accrual basis, outlays are the sum of cash disbursements for direct charges for goods and services, the amount of indirect expense incurred, the value of in-kind contributions applied, and the net increase (or decrease) in the amounts owed by the recipient for goods and other property received, for services performed by employees, contractors, subrecipients and other payees and other amounts becoming owed under programs for which no current services or performance are required.

(x) *Personal property* means property of any kind except real property. It may be tangible, having physical existence, or intangible, having no physical existence, such as copyrights, patents, or securities.

(y) *Prior approval* means written approval by an authorized official evidencing prior consent.

(z) *Program income* means gross income earned by the recipient that is directly generated by a supported activity or earned as a result of the award (see exclusions in § 1210.24 (e) and (h)). Program income includes, but is not limited to, income from fees for services performed, the use or rental of real or personal property acquired under federally-funded projects, the sale of commodities or items fabricated under an award, license fees and royalties on patents and copyrights, and interest on loans made with award funds. Interest earned on advances of Federal funds is not program income. Except as otherwise provided in NHPRC regulations or the terms and conditions of the award, program income does not include the receipt of principal on loans, rebates, credits, discounts, etc., or interest earned on any of them.

(aa) *Project costs* means all allowable costs, as set forth in the applicable Federal cost principles, incurred by a recipient and the value of the contributions made by third parties in accomplishing the objectives of the award during the project period.

(bb) *Project period* means the period established in the award document during which NHPRC sponsorship begins and ends.

(cc) *Property* means, unless otherwise stated, real property, equipment, intangible property and debt instruments.

(dd) *Real property* means land, including land improvements, structures and appurtenances thereto, but excludes movable machinery and equipment.

(ee) *Recipient* means an organization receiving financial assistance directly from the NHPRC to carry out a project or program. The term includes public and private institutions of higher education, public and private hospitals, and other quasi-public and private non-profit organizations such as, but not limited to, community action agencies, research institutes, educational associations, and health centers. The term may include commercial organizations, foreign or international organizations (such as agencies of the United Nations) which are recipients, subrecipients, or contractors or subcontractors of recipients or subrecipients at the discretion of the NHPRC. The term does not include government-owned contractor-operated facilities or research centers providing continued support for mission-oriented, large-scale programs that are government-owned or controlled, or are designated as federally-funded research and development centers.

(ff) *Research and development* means all research activities, both basic and applied, and all development activities that are supported at universities, colleges, and other non-profit institutions. ''Research'' is defined as a systematic study directed toward fuller scientific knowledge or understanding

of the subject studied. ''Development'' is the systematic use of knowledge and understanding gained from research directed toward the production of useful materials, devices, systems, or methods, including design and development of prototypes and processes. The term research also includes activities involving the training of individuals in research techniques where such activities utilize the same facilities as other research and development activities and where such activities are not included in the instruction function.

(gg) *Small awards* means a grant or cooperative agreement not exceeding the small purchase threshold fixed at 41 U.S.C. 403(11) (currently $25,000).

(hh) *Subaward* means an award of financial assistance in the form of money, or property in lieu of money, made under an award by a recipient to an eligible subrecipient or by a subrecipient to a lower tier subrecipient. The term includes financial assistance when provided by any legal agreement, even if the agreement is called a contract, but does not include procurement of goods and services nor does it include any form of assistance which is excluded from the definition of ''award'' in paragraph (e) of this section.

(ii) *Subrecipient* means the legal entity to which a subaward is made and which is accountable to the recipient for the use of the funds provided. The term may include foreign or international organizations (such as agencies of the United Nations) at the discretion of the NHPRC.

(jj) *Supplies* means all personal property excluding equipment, intangible property, and debt instruments as defined in this section, and inventions of a contractor conceived or first actually reduced to practice in the performance of work under a funding agreement (''subject inventions''), as defined in 37 CFR Part 401, ''Rights to Inventions Made by Nonprofit Organizations and Small Business Firms Under Government Grants, Contracts, and Cooperative Agreements.''

(kk) *Suspension* means an action by the NHPRC that temporarily withdraws Federal sponsorship under an award, pending corrective action by the recipient or pending a decision to terminate the award by the NHPRC. Suspension of an award is a separate action from suspension under NARA regulations implementing E.O. 12549 and E.O. 12689, ''Debarment and Suspension'' (36 CFR Part 1209).

(ll) *Termination* means the cancellation of NHPRC sponsorship, in whole or in part, under an agreement at any time prior to the date of completion.

(mm) *Third party in-kind contributions* means the value of non-cash contributions provided by non-Federal third parties. Third party in-kind contributions may be in the form of real property, equipment, supplies and other expendable property, and the value of goods and services directly benefiting and specifically identifiable to the project or program.

(nn) *Unliquidated obligations*, for financial reports prepared on a cash basis, means the amount of obligations incurred by the recipient that have not been paid. For reports prepared on an accrued expenditure basis, they represent the amount of obligations incurred by the recipient for which an outlay has not been recorded.

(oo) *Unobligated balance* means the portion of the funds authorized by the NHPRC that has not been obligated by the recipient and is determined by deducting the cumulative obligations from the cumulative funds authorized.

(pp) *Unrecovered indirect cost* means the difference between the amount awarded and the amount which could have been awarded under the recipient's approved negotiated indirect cost rate.

(qq) *Working capital advance* means a procedure whereby funds are advanced to the recipient to cover its estimated disbursement needs for a given initial period.

§ 1210.3 Effect on other issuances.

For awards subject to this part, all administrative requirements of codified program regulations, program manuals, handbooks and other nonregulatory materials which are inconsistent with the requirements of this part shall be superseded, except to the extent they are required by statute, or authorized in accordance with the deviations provision in § 1210.4.

§ 1210.4 Deviations.

The Office of Management and Budget (OMB) may grant exceptions for classes of grants or recipients subject to the requirements of this part when exceptions are not prohibited by statute. However, in the interest of maximum uniformity, exceptions from the requirements of this part shall be permitted only in unusual circumstances. The NHPRC may apply more restrictive requirements to a class of recipients when approved by OMB. The NHPRC may apply less restrictive requirements when awarding small awards, except for those requirements which are statutory. Exceptions on a case-by-case basis may also be made by the NHPRC.

§ 1210.5 Subawards.

Unless sections of this part specifically exclude subrecipients from coverage, the provisions of this part shall be applied to subrecipients performing work under awards if such subrecipients are institutions of higher education, hospitals or other non-profit organizations. State and local government subrecipients are subject to the provisions of regulations implementing the grants management common rule, ''Uniform Administrative Requirements for Grants and Cooperative Agreements to State and Local Governments,'' published at 36 CFR part 1207.

Subpart B—Pre-Award Requirements

§ 1210.10 Purpose.

Sections 1210.11 through 1210.17 prescribes forms and instructions and other pre-award matters to be used in applying for NHPRC awards.

§ 1210.11 Pre-award policies.

(a) *Use of grants and cooperative agreements, and contracts.* In each instance, the NHPRC shall decide on the appropriate award instrument (i.e., grant, cooperative agreement, or contract). The Federal Grant and Cooperative Agreement Act (31 U.S.C. 6301–08) governs the use of grants, cooperative agreements and contracts. A grant or cooperative agreement shall be used only when the principal purpose of a transaction is to accomplish a public purpose of support or stimulation authorized by Federal statute. The statutory criterion for choosing between grants and cooperative agreements is that for the latter, ''substantial involvement is expected between the executive agency and the State, local government, or other recipient when carrying out the activity contemplated in the agreement.'' Contracts shall be used when the principal purpose is acquisition of property or services for the direct benefit or use of the Federal Government.

(b) *Public notice and priority setting.* The NHPRC shall notify the public of its intended funding priorities for discretionary grant programs.

§ 1210.12 Forms for applying for Federal assistance.

(a) The NHPRC shall comply with the applicable report clearance requirements of 5 CFR Part 1320, ''Controlling Paperwork Burdens on the Public,'' with regard to all forms used by the NHPRC in place of or as a supplement to the Standard Form 424 (SF–424) series.

(b) Applicants shall use the SF–424 (Application for Federal Assistance) and NA Form 17001 (Budget Form) forms and instructions prescribed by the NHPRC Program Guidelines. OMB Control Number 3095–0004 has been assigned to the Budget Form. OMB Control Number 3095–0013 has been assigned to the NHPRC Program Guidelines.

(c) Applicants shall complete the appropriate sections of the SF–424 (Application for Federal Assistance) indicating whether the application was subject to review by the State Single Point of Contact (SPOC) under E.O. 12372, ''Intergovernmental Review of Federal Programs.'' The name and address of the SPOC for a particular State can be obtained from the NHPRC or the Catalog of Federal Domestic Assistance. The SPOC shall advise the applicant whether the program for which application is made has been selected by that State for review.

§ 1210.13 Debarment and suspension.

The NHPRC and recipients shall comply with the nonprocurement debarment and suspension common rule implementing E.O.s 12549 and 12689, ''Debarment and Suspension'' (36 CFR Part 1209). This common rule restricts subawards and contracts with certain parties that are debarred, suspended or otherwise excluded from or ineligible for participation in Federal assistance programs or activities.

§ 1210.14 Special award conditions.

If an applicant or recipient has a history of poor performance, is not financially stable, has a management system that does not meet the standards prescribed in this part, has not conformed to the terms and conditions of a previous award, or is not otherwise responsible, the NHPRC may impose additional requirements as needed, provided that such applicant or recipient is notified in writing as to: the nature of the additional requirements, the reason why the additional requirements are being imposed, the nature of the corrective action needed, the time allowed for completing the corrective actions, and the method for requesting reconsideration of the additional requirements imposed. Any special conditions shall be promptly removed once the conditions that prompted them have been corrected.

§ 1210.15 Metric system of measurement.

The Metric Conversion Act, as amended by the Omnibus Trade and Competitiveness Act (15 U.S.C. 205) declares that the metric system is the preferred measurement system for U.S. trade and commerce. The Act requires NARA to establish a date or dates in consultation with the Secretary of Commerce, when the metric system of measurement will be used in NARA's procurements, grants, and other business-related activities. Metric implementation may take longer where the use of the system is initially impractical or likely to cause significant inefficiencies in the accomplishment of federally-funded activities. NARA shall follow the provisions of E.O. 12770, ''Metric Usage in Federal Government Programs.''

§ 1210.16 Resource Conservation and Recovery Act.

Under the Resource Conservation and Recovery Act ((RCRA) (Pub. L. 94–580 codified at 42 U.S.C. 6962), any State agency or agency of a political subdivision of a State which is using appropriated Federal funds must comply with section 6002. Section 6002 requires that preference be given in procurement programs to the purchase of specific products containing recycled materials identified in guidelines developed by the Environmental Protection Agency (EPA) (40 CFR Parts 247 through 254). Accordingly, State and local institutions of higher education, hospitals, and non-profit organizations that receive direct Federal awards or other Federal funds shall give preference in their procurement programs funded with Federal funds to the purchase of recycled products pursuant to the EPA guidelines.

§ 1210.17 Certifications and representations.

Unless prohibited by statute or codified regulation, the NHPRC is authorized to allow recipients to submit certifications and representations required by statute, executive order, or regulation on an annual basis, if they have an ongoing and continuing relationship with the NHPRC. Annual certifications and representations shall be signed by responsible officials with the authority to ensure recipients' compliance with the pertinent requirements.

Subpart C—Post-Award Requirements

FINANCIAL AND PROGRAM MANAGEMENT

§ 1210.20 Purpose of financial and program management.

Sections 1210.21 through 1210.28 prescribe standards for financial management systems, methods for making payments and rules for: satisfying cost sharing and matching requirements, accounting for program income, budget revision approvals, making audits, determining allowability of cost, and establishing fund availability.

§ 1210.21 Standards for financial management systems.

(a) The NHPRC shall require recipients to relate financial data to performance data and develop unit cost information whenever practical.

(b) Recipients' financial management systems shall provide for the following.

(1) Accurate, current and complete disclosure of the financial results of each NHPRC-sponsored project or program in accordance with the reporting requirements set forth in § 1210.52.

(2) Records that identify adequately the source and application of funds for NHPRC-sponsored activities. These records shall contain information pertaining to NHPRC awards, authorizations, obligations, unobligated balances, assets, outlays, income and interest.

(3) Effective control over and accountability for all funds, property and other assets. Recipients shall adequately safeguard all such assets and assure they are used solely for authorized purposes.

(4) Comparison of outlays with budget amounts for each award. Whenever appropriate, financial information should be related to performance and unit cost data.

(5) Written procedures to minimize the time elapsing between the transfer of funds to the recipient from the U.S. Treasury and the issuance or redemption of checks, warrants or payments by other means for program purposes by the recipient. To the extent that the provisions of the Cash Management Improvement Act (CMIA) (Pub. L. 101–453) govern, payment methods of State agencies, instrumentalities, and fiscal agents shall be consistent with CMIA Treasury-State Agreements or the CMIA default procedures codified at 31 CFR Part 205, ''Withdrawal of Cash from the Treasury for Advances under Federal Grant and Other Programs.''

(6) Written procedures for determining the reasonableness, allocability and allowability of costs in accordance with the provisions of the applicable Federal cost principles and the terms and conditions of the award.

(7) Accounting records including cost accounting records that are supported by source documentation.

(c) Where the Federal Government guarantees or insures the repayment of money borrowed by the recipient, the NHPRC, at its discretion, may require adequate bonding and insurance if the bonding and insurance requirements of the recipient are not deemed adequate to protect the interest of the Federal Government.

(d) The NHPRC may require adequate fidelity bond coverage where the recipient lacks sufficient coverage to protect the Federal Government's interest.

(e) Where bonds are required in the situations described in this section, the bonds shall be obtained from companies holding certificates of authority as acceptable sureties, as prescribed in 31 CFR Part 223, ''Surety Companies Doing Business with the United States.''

§ 1210.22 Payment.

(a) Payment methods shall minimize the time elapsing between the transfer of funds from the United States Treasury and the issuance or redemption of checks, warrants, or payment by other means by the recipients. Payment methods of State agencies or instrumentalities shall be consistent with Treasury-State CMIA agreements or default procedures codified at 31 CFR Part 205.

(b) Recipients will be paid in advance, provided they maintain or demonstrate the willingness to maintain written procedures that minimize the time elapsing between the transfer of funds and disbursement by the recipient, and financial management systems that meet the standards for fund control and accountability as established in § 1210.21. Cash advances to a recipient organization shall be limited to the minimum amounts needed and be timed to be in accordance with the actual, immediate cash requirements of the recipient organization in carrying out the purpose of the approved program or project. The timing and amount of cash advances shall be as close as is administratively feasible to the actual disbursements by the recipient organization for direct program or project costs and the proportionate share of any allowable indirect costs.

(c) Whenever possible, advances shall be consolidated to cover anticipated cash needs for all awards made by the NHPRC to the recipient.

(1) Advance payment mechanisms include, but are not limited to, Treasury check and electronic funds transfer.

(2) Advance payment mechanisms are subject to 31 CFR Part 205.

(3) Recipients can submit requests for advances and reimbursements at least monthly when a predetermined schedule of electronic funds transfer is not used.

(d) Requests for Treasury check advance payment shall be submitted on SF–270, ''Request for Advance or Reimbursement,'' or other forms as may be authorized by OMB. This form is not to be used when Treasury check advance payments are made to the recipient automatically through the use of a predetermined payment schedule or if precluded by special NHPRC instructions for electronic funds transfer.

(e) Reimbursement is the preferred method when the requirements in paragraph (b) of this section cannot be met.

(1) When the reimbursement method is used, the NHPRC shall make payment within 30 days after receipt of the billing, unless the billing is improper.

(2) Recipients can submit a request for reimbursement at least monthly when a predetermined schedule of electronic funds transfer is not used.

(f) If a recipient cannot meet the criteria for advance payments and the NHPRC has determined that reimbursement is not feasible because the recipient lacks sufficient working capital, the NHPRC may provide cash on a working capital advance basis. Under this procedure, the NHPRC shall advance cash to the recipient to cover its estimated disbursement needs for an initial period generally geared to the awardee's disbursing cycle. Thereafter, the NHPRC shall reimburse the recipient for its actual cash disbursements. The working capital advance method of payment shall not be used for recipients unwilling or unable to provide timely advances to their subrecipient to meet the subrecipient's actual cash disbursements.

(g) To the extent available, recipients shall disburse funds available from repayments to and interest earned on a revolving fund, program income, rebates, refunds, contract settlements, audit recoveries and interest earned on such funds before requesting additional cash payments.

(h) Unless otherwise required by statute, the NHPRC shall not withhold payments for proper charges made by recipients at any time during the project period unless paragraph (h)(1) or (2) of this section apply.

(1) A recipient has failed to comply with the project objectives, the terms and conditions of the award, or NHPRC reporting requirements.

(2) The recipient or subrecipient is delinquent in a debt to the United States as defined in OMB Circular A–129, ''Managing Federal Credit Programs.'' Under such conditions, the NHPRC may, upon reasonable notice, inform the recipient that payments shall not be made for obligations incurred after a specified date until the conditions are corrected or the indebtedness to the Federal Government is liquidated.

(i) Standards governing the use of banks and other institutions as depositories of funds advanced under awards are as follows.

(1) Except for situations described in paragraph (i)(2) of this section, the NHPRC shall not require separate depository accounts for funds provided to a recipient or establish any eligibility requirements for depositories for funds provided to a recipient. However, recipients must be able to account for the receipt, obligation and expenditure of funds.

(2) Advances of NHPRC funds shall be deposited and maintained in insured accounts whenever possible.

(j) Consistent with the national goal of expanding the opportunities for women-owned and minority-owned business enterprises, recipients shall be encouraged to use women-owned and minority-owned banks (a bank which is owned at least 50 percent by women or minority group members).

(k) Recipients shall maintain advances of NHPRC funds in interest bearing accounts, unless paragraphs (k)(1), (2) or (3) of this section apply.

(1) The recipient receives less than $120,000 in Federal awards per year.

(2) The best reasonably available interest bearing account would not be expected to earn interest in excess of $250 per year on Federal cash balances.

(3) The depository would require an average or minimum balance so high that it would not be feasible within the expected Federal and non-Federal cash resources.

(l) In keeping with Electronic Funds Transfer rules (31 CFR Part 206), interest earned should be remitted annually to the Department of Health and Human Services (HHS) Payment Management System through an electronic medium such as the FEDWIRE Deposit system. Recipients which do not have this capability should use a check and mail it to the Payment Management System, P.O. Box 6021, Rockville, MD 20852. Interest amounts up to $250 per year may be retained by the recipient for administrative expense. State universities and hospitals shall comply with CMIA, as it pertains to interest. If an entity subject to CMIA uses its own funds to pay pre-award costs for discretionary awards without prior written approval from the NHPRC, it waives its right to recover the interest under CMIA.

(m) Except as noted elsewhere in this part, only the SF–270, Request for Advance or Reimbursement, shall be authorized for the recipients in requesting advances and reimbursements. The NHPRC requires an original and two copies of this form.

§ 1210.23 Cost sharing or matching.

(a) All contributions, including cash and third party in-kind, shall be accepted as part of the recipient's cost sharing or matching when such contributions meet all of the following criteria.

(1) Are verifiable from the recipient's records.

(2) Are not included as contributions for any other federally-assisted project or program.

(3) Are necessary and reasonable for proper and efficient accomplishment of project or program objectives.

(4) Are allowable under the applicable cost principles.

(5) Are not paid by the Federal Government under another award, except where authorized by Federal statute to be used for cost sharing or matching.

(6) Are provided for in the approved budget when required by the NHPRC.

(7) Conform to other provisions of this part, as applicable.

(b) Unrecovered indirect costs may be included as part of cost sharing or matching only with the prior approval of the NHPRC.

(c) Values for recipient contributions of services and property shall be established in accordance with the applicable cost principles. If the NHPRC authorizes recipients to donate buildings or land for construction/facilities acquisition projects or long-term use, the value of the donated property for cost sharing or matching shall be the lesser of paragraph (c)(1) or (2) of this section.

(1) The certified value of the remaining life of the property recorded in the recipient's accounting records at the time of donation.

(2) The current fair market value. However, when there is sufficient justification, the NHPRC may approve the use of the current fair market value of the donated property, even if it exceeds the certified value at the time of donation to the project.

(d) Volunteer services furnished by professional and technical personnel, consultants, and other skilled and unskilled labor may be counted as cost sharing or matching if the service is an integral and necessary part of an approved project or program. Rates for volunteer services shall be consistent with those paid for similar work in the recipient's organization. In those instances in which the required skills are not found in the recipient organization, rates shall be consistent with those paid for similar work in the labor market in which the recipient competes for the kind of services involved. In either case, paid fringe benefits that are reasonable, allowable, and allocable may be included in the valuation.

(e) When an employer other than the recipient furnishes the services of an employee, these services shall be valued at the employee's regular rate of pay (plus an amount of fringe benefits that are reasonable, allowable, and allocable, but exclusive of overhead costs), provided these services are in

the same skill for which the employee is normally paid.

(f) Donated supplies may include such items as expendable equipment, office supplies, laboratory supplies or workshop and classroom supplies. Value assessed to donated supplies included in the cost sharing or matching share shall be reasonable and shall not exceed the fair market value of the property at the time of the donation.

(g) The method used for determining cost sharing or matching for donated equipment, buildings and land for which title passes to the recipient may differ according to the purpose of the award, if paragraph (g)(1) or (2) of this section apply.

(1) If the purpose of the award is to assist the recipient in the acquisition of equipment, buildings or land, the total value of the donated property may be claimed as cost sharing or matching.

(2) If the purpose of the award is to support activities that require the use of equipment, buildings or land, normally only depreciation or use charges for equipment and buildings may be made. However, the full value of equipment or other capital assets and fair rental charges for land may be allowed, provided that the NHPRC has approved the charges.

(h) The value of donated property shall be determined in accordance with the usual accounting policies of the recipient, with the following qualifications.

(1) The value of donated land and buildings shall not exceed its fair market value at the time of donation to the recipient as established by an independent appraiser (e.g., certified real property appraiser or General Services Administration representative) and certified by a responsible official of the recipient.

(2) The value of donated equipment shall not exceed the fair market value of equipment of the same age and condition at the time of donation.

(3) The value of donated space shall not exceed the fair rental value of comparable space as established by an independent appraisal of comparable space and facilities in a privately-owned building in the same locality.

(4) The value of loaned equipment shall not exceed its fair rental value.

(5) The following requirements pertain to the recipient's supporting records for in-kind contributions from third parties.

(i) Volunteer services shall be documented and, to the extent feasible, supported by the same methods used by the recipient for its own employees.

(ii) The basis for determining the valuation for personal service, material, equipment, buildings and land shall be documented.

§ 1210.24 Program income.

(a) The NHPRC applies the standards set forth in this section in requiring recipient organizations to account for program income related to projects financed in whole or in part with Federal funds.

(b) Except as provided in paragraph (h) of this section, program income earned during the project period shall be retained by the recipient and, in accordance with these regulations or the terms and conditions of the award, shall be used in one or more of the ways listed in the following.

(1) Added to funds committed to the project by the NHPRC and recipient and used to further eligible project or program objectives.

(2) Used to finance the non-Federal share of the project or program.

(3) Deducted from the total project or program allowable cost in determining the net allowable costs on which the Federal share of costs is based.

(c) When the NHPRC authorizes the disposition of program income as described in paragraphs (b)(1) or (b)(2) of this section, program income in excess of any limits stipulated shall be used in accordance with paragraph (b)(3) of this section.

(d) In the event that the NHPRC does not specify in its regulations or the terms and conditions of the award how program income is to be used, paragraph (b)(3) of this section shall apply automatically to all projects or programs except research. For awards that support research, paragraph (b)(1) of this section shall apply automatically unless the NHPRC indicates in the terms and conditions another alternative on the award or the recipient is

subject to special award conditions, as indicated in § 1210.14.

(e) Unless NHPRC regulations or the terms and conditions of the award provide otherwise, recipients shall have no obligation to the Federal Government regarding program income earned after the end of the project period.

(f) If authorized by NHPRC regulations or the terms and conditions of the award, costs incident to the generation of program income may be deducted from gross income to determine program income, provided these costs have not been charged to the award.

(g) Proceeds from the sale of property shall be handled in accordance with the requirements of the Property Standards (See §§ 1210.30 through 1210.37).

(h) Unless NHPRC regulations or the terms and condition of the award provide otherwise, recipients shall have no obligation to the Federal Government with respect to program income earned from license fees and royalties for copyrighted material, patents, patent applications, trademarks, and inventions produced under an award. However, Patent and Trademark Amendments (35 U.S.C. 18) apply to inventions made under an experimental, developmental, or research award.

§ 1210.25 Revision of budget and program plans.

(a) The budget plan is the financial expression of the project or program as approved during the award process. It may include either the Federal and non-Federal share, or only the Federal share, depending upon NHPRC requirements. It shall be related to performance for program evaluation purposes whenever appropriate.

(b) Recipients are required to report deviations from budget and program plans, and request prior approvals for budget and program plan revisions, in accordance with this section.

(c) Recipients shall request prior approvals from the NHPRC for one or more of the following program or budget related reasons.

(1) Change in the scope or the objective of the project or program (even if there is no associated budget revision requiring prior written approval).

(2) Change in a key person specified in the application or award document.

(3) The absence for more than three months, or a 25 percent reduction in time devoted to the project, by the approved project director or principal investigator.

(4) The need for additional NHPRC funding.

(5) The transfer of amounts budgeted for indirect costs to absorb increases in direct costs, or vice versa, if approval is required by the NHPRC.

(6) The inclusion, unless waived by the NHPRC, of costs that require prior approval in accordance with OMB Circular A–21, ''Cost Principles for Institutions of Higher Education,'' OMB Circular A–122, ''Cost Principles for Non-Profit Organizations,'' or 45 CFR Part 74 Appendix E, ''Principles for Determining Costs Applicable to Research and Development under Grants and Contracts with Hospitals,'' or 48 CFR Part 31, ''Contract Cost Principles and Procedures,'' as applicable.

(7) The transfer of funds allotted for training allowances (direct payment to trainees) to other categories of expense.

(8) Unless described in the application and funded in the approved awards, the subaward, transfer or contracting out of any work under an award. This provision does not apply to the purchase of supplies, material, equipment or general support services.

(d) No other prior approval requirements for specific items will be imposed unless a deviation has been approved by OMB.

(e) Except for requirements listed in paragraphs (c)(1) and (c)(4) of this section, the NHPRC is authorized, at their option, to waive cost-related and administrative prior written approvals required by this Circular and OMB Circulars A–21 and A–122. Such waivers may include authorizing recipients to do any one or more of the following.

(1) Incur pre-award costs 90 calendar days prior to award or more than 90 calendar days with the prior approval of the NHPRC. All pre-award costs are incurred at the recipient's risk (i.e., the NHPRC is under no obligation to reimburse such costs if for any reason the recipient does not receive an award or if the award is less than anticipated and inadequate to cover such costs).

(2) Initiate a one-time extension of the expiration date of the award of up to 12 months unless one or more of the following conditions apply. For one-time extensions, the recipient must notify the NHPRC in writing with the supporting reasons and revised expiration date at least 10 days before the expiration date specified in the award. This one-time extension may not be exercised merely for the purpose of using unobligated balances.

(i) The terms and conditions of award prohibit the extension.

(ii) The extension requires additional NHPRC funds.

(iii) The extension involves any change in the approved objectives or scope of the project.

(3) Carry forward unobligated balances to subsequent funding periods.

(4) For awards that support research, unless the NHPRC provides otherwise in the award or in NHPRC's regulations, the prior approval requirements described in paragraph (e) of this section are automatically waived (i.e., recipients need not obtain such prior approvals) unless one of the conditions included in paragraph (e)(2) of this section applies.

(f) The NHPRC may, at its option, restrict the transfer of funds among direct cost categories or programs, functions and activities for awards in which the Federal share of the project exceeds $100,000 and the cumulative amount of such transfers exceeds or is expected to exceed 10 percent of the total budget as last approved by the NHPRC. The NHPRC shall not permit a transfer that would cause any Federal appropriation or part thereof to be used for purposes other than those consistent with the original intent of the appropriation.

(g) All other changes to nonconstruction budgets, except for the changes described in paragraph (j), do not require prior approval.

(h) [Reserved]

(i) No other prior approval requirements for specific items will be imposed unless a deviation has been approved by OMB.

(j) The NHPRC shall require recipients to notify the NHPRC in writing promptly whenever the amount of Federal authorized funds is expected to exceed the needs of the recipient for the project period by more than $5,000 or five percent of the NHPRC award, whichever is greater. This notification shall not be required if an application for additional funding is submitted for a continuation award.

(k) When requesting approval for budget revisions, recipients shall use the budget forms that were used in the application unless the NHPRC indicates a letter of request suffices.

(l) Within 30 calendar days from the date of receipt of the request for budget revisions, the NHPRC shall review the request and notify the recipient whether the budget revisions have been approved. If the revision is still under consideration at the end of 30 calendar days, the NHPRC shall inform the recipient in writing of the date when the recipient may expect the decision.

§ 1210.26 Non-Federal audits.

(a) Recipients and subrecipients that are institutions of higher education or other non-profit organizations shall be subject to the audit requirements contained in OMB Circular A–133, ''Audits of Institutions of Higher Education and Other Non-Profit Institutions.''

(b) State and local governments shall be subject to the audit requirements contained in the Single Audit Act (31 U.S.C. 7501–7) and the cognizant Federal agency regulations implementing OMB Circular A–128, ''Audits of State and Local Governments.''

(c) Hospitals not covered by the audit provisions of OMB Circular A–133 shall be subject to the audit requirements of the cognizant Federal agency.

§ 1210.27 Allowable costs.

For each kind of recipient, there is a set of Federal principles for determining allowable costs. Allowability of costs shall be determined in accordance with the cost principles applicable to the entity incurring the costs. Thus, allowability of costs incurred by State, local or federally-recognized Indian tribal governments is determined in accordance with the provisions of OMB Circular A–87, ''Cost Principles for State and Local Governments.'' The allowability of costs incurred by non-profit organizations is determined in accordance with the provisions of OMB

Circular A–122, ''Cost Principles for Non-Profit Organizations.'' The allowability of costs incurred by institutions of higher education is determined in accordance with the provisions of OMB Circular A–21, ''Cost Principles for Educational Institutions.'' The allowability of costs incurred by hospitals is determined in accordance with the provisions of Appendix E of 45 CFR Part 74, ''Principles for Determining Costs Applicable to Research and Development Under Grants and Contracts with Hospitals.'' The allowability of costs incurred those non-profit organizations listed in Attachment C to Circular A–122 is determined in accordance with the provisions of the Federal Acquisition Regulation (FAR) at 48 CFR Part 31.

§ 1210.28 Period of availability of funds.

Where a funding period is specified, a recipient may charge to the grant only allowable costs resulting from obligations incurred during the funding period and any pre-award costs authorized by the NHPRC.

PROPERTY STANDARDS

§ 1210.30 Purpose of property standards.

Sections 1210.31 through 1210.37 set forth uniform standards governing management and disposition of property furnished by the Federal Government whose cost was charged to a project supported by an NHPRC award. The NHPRC requires recipients to observe these standards under awards and shall not impose additional requirements, unless specifically required by Federal statute. The recipient may use its own property management standards and procedures provided it observes the provisions of §§ 1210.31 through 1210.37.

§ 1210.31 Insurance coverage.

Recipients shall, at a minimum, provide the equivalent insurance coverage for real property and equipment acquired with NHPRC funds as provided to property owned by the recipient. Federally-owned property need not be insured unless required by the terms and conditions of the award.

§ 1210.32 Real property.

The NHPRC shall prescribe requirements for recipients concerning the use and disposition of real property acquired in whole or in part under awards. Unless otherwise provided by statute, such requirements, at a minimum, shall contain the following.

(a) Title to real property shall vest in the recipient subject to the condition that the recipient shall use the real property for the authorized purpose of the project as long as it is needed and shall not encumber the property without approval of the NHPRC.

(b) The recipient shall obtain written approval by the NHPRC for the use of real property in other federally-sponsored projects when the recipient determines that the property is no longer needed for the purpose of the original project. Use in other projects shall be limited to those under federally-sponsored projects (i.e., awards) or programs that have purposes consistent with those authorized for support by the NHPRC.

(c) When the real property is no longer needed as provided in paragraphs (a) and (b) of this section, the recipient shall request disposition instructions from the NHPRC or its successor Federal awarding agency. The NHPRC shall observe one or more of the following disposition instructions.

(1) The recipient may be permitted to retain title without further obligation to the Federal Government after it compensates the Federal Government for that percentage of the current fair market value of the property attributable to the Federal participation in the project.

(2) The recipient may be directed to sell the property under guidelines provided by the NHPRC and pay the Federal Government for that percentage of the current fair market value of the property attributable to the Federal participation in the project (after deducting actual and reasonable selling and fix-up expenses, if any, from the sales proceeds). When the recipient is authorized or required to sell the property, proper sales procedures shall be established that provide for competition to the extent practicable and result in the highest possible return.

(3) The recipient may be directed to transfer title to the property to the Federal Government or to an eligible third party provided that, in such cases, the recipient shall be entitled to compensation for its attributable percentage of the current fair market value of the property.

§ 1210.33 Federally-owned and exempt property.

(a) Federally-owned property.

(1) Title to federally-owned property remains vested in the Federal Government. Recipients shall submit annually an inventory listing of federally-owned property in their custody to the NHPRC. Upon completion of the award or when the property is no longer needed, the recipient shall report the property to the NHPRC for further Federal agency utilization.

(2) If the NHPRC has no further need for the property, it shall be declared excess and reported to the General Services Administration. Appropriate instructions shall be issued to the recipient by the NHPRC.

(b) Exempt property. When statutory authority exists, the NHPRC has the option to vest title to property acquired with Federal funds in the recipient without further obligation to the Federal Government and under conditions the NHPRC considers appropriate. Such property is ''exempt property.'' Should the NHPRC not establish conditions, title to exempt property upon acquisition shall vest in the recipient without further obligation to the Federal Government.

§ 1210.34 Equipment.

(a) Title to equipment acquired by a recipient with NHPRC funds shall vest in the recipient, subject to conditions of this section.

(b) The recipient shall not use equipment acquired with NHPRC funds to provide services to non-Federal outside organizations for a fee that is less than private companies charge for equivalent services, unless specifically authorized by Federal statute, for as long as the Federal Government retains an interest in the equipment.

(c) The recipient shall use the equipment in the project or program for which it was acquired as long as needed, whether or not the project or program continues to be supported by Federal funds and shall not encumber the property without approval of the NHPRC. When no longer needed for the original project or program, the recipient shall use the equipment in connection with its other federally-sponsored activities, in the following order of priority:

(1) Activities sponsored by the NHPRC which funded the original project, then

(2) Activities sponsored by other Federal awarding agencies.

(d) During the time that equipment is used on the project or program for which it was acquired, the recipient shall make it available for use on other projects or programs if such other use will not interfere with the work on the project or program for which the equipment was originally acquired. First preference for such other use shall be given to other projects or programs sponsored by the NHPRC that financed the equipment; second preference shall be given to projects or programs sponsored by other Federal awarding agencies. If the equipment is owned by the Federal Government, use on other activities not sponsored by the Federal Government shall be permissible if authorized by the NHPRC. User charges shall be treated as program income.

(e) When acquiring replacement equipment, the recipient may use the equipment to be replaced as trade-in or sell the equipment and use the proceeds to offset the costs of the replacement equipment subject to the approval of the NHPRC.

(f) The recipient's property management standards for equipment acquired with Federal funds and federally-owned equipment shall include all of the following.

(1) Equipment records shall be maintained accurately and shall include the following information.

(i) A description of the equipment.

(ii) Manufacturer's serial number, model number, Federal stock number, national stock number, or other identification number.

(iii) Source of the equipment, including the award number.

(iv) Whether title vests in the recipient or the Federal Government.

(v) Acquisition date (or date received, if the equipment was furnished by the Federal Government) and cost.

(vi) Information from which one can calculate the percentage of Federal participation in the cost of the equipment (not applicable to equipment furnished by the Federal Government).

(vii) Location and condition of the equipment and the date the information was reported.

(viii) Unit acquisition cost.

(ix) Ultimate disposition data, including date of disposal and sales price or the method used to determine current fair market value where a recipient compensates the NHPRC for its share.

(2) Equipment owned by the Federal Government shall be identified to indicate Federal ownership.

(3) A physical inventory of equipment shall be taken and the results reconciled with the equipment records at least once every two years. Any differences between quantities determined by the physical inspection and those shown in the accounting records shall be investigated to determine the causes of the difference. The recipient shall, in connection with the inventory, verify the existence, current utilization, and continued need for the equipment.

(4) A control system shall be in effect to insure adequate safeguards to prevent loss, damage, or theft of the equipment. Any loss, damage, or theft of equipment shall be investigated and fully documented; if the equipment was owned by the Federal Government, the recipient shall promptly notify the NHPRC.

(5) Adequate maintenance procedures shall be implemented to keep the equipment in good condition.

(6) Where the recipient is authorized or required to sell the equipment, proper sales procedures shall be established which provide for competition to the extent practicable and result in the highest possible return.

(g) When the recipient no longer needs the equipment, the equipment may be used for other activities in accordance with the following standards. For equipment with a current per unit fair market value of $5,000 or more, the recipient may retain the equipment for other uses provided that compensation is made to the NHPRC or its successor. The amount of compensation shall be computed by applying the percentage of Federal participation in the cost of the original project or program to the current fair market value of the equipment. If the recipient has no need for the equipment, the recipient shall request disposition instructions from the NHPRC. The NHPRC shall determine whether the equipment can be used to meet the NHPRC's requirements. If no requirement exists within the NHPRC, the availability of the equipment shall be reported to the General Services Administration by the NHPRC to determine whether a requirement for the equipment exists in other Federal agencies. The NHPRC shall issue instructions to the recipient no later than 120 calendar days after the recipient's request and the following procedures shall govern.

(1) If so instructed or if disposition instructions are not issued within 120 calendar days after the recipient's request, the recipient shall sell the equipment and reimburse the NHPRC an amount computed by applying to the sales proceeds the percentage of Federal participation in the cost of the original project or program. However, the recipient shall be permitted to deduct and retain from the Federal share $500 or ten percent of the proceeds, whichever is less, for the recipient's selling and handling expenses.

(2) If the recipient is instructed to ship the equipment elsewhere, the recipient shall be reimbursed by the Federal Government by an amount which is computed by applying the percentage of the recipient's participation in the cost of the original project or program to the current fair market value of the equipment, plus any reasonable shipping or interim storage costs incurred.

(3) If the recipient is instructed to otherwise dispose of the equipment, the recipient shall be reimbursed by the NHPRC for such costs incurred in its disposition.

(4) The NHPRC reserves the right to transfer the title to the Federal Government or to a third party named by the Federal Government when such third party is otherwise eligible under

existing statutes. Such transfer shall be subject to the following standards.

(i) The equipment shall be appropriately identified in the award or otherwise made known to the recipient in writing.

(ii) The NHPRC shall issue disposition instructions within 120 calendar days after receipt of a final inventory. The final inventory shall list all equipment acquired with grant funds and federally-owned equipment. If the NHPRC fails to issue disposition instructions within the 120 calendar day period, the recipient shall apply the standards of this section, as appropriate.

(iii) When the NHPRC exercises its right to take title, the equipment shall be subject to the provisions for federally-owned equipment.

§ 1210.35 Supplies and other expendable property.

(a) Title to supplies and other expendable property shall vest in the recipient upon acquisition. If there is a residual inventory of unused supplies exceeding $5,000 in total aggregate value upon termination or completion of the project or program and the supplies are not needed for any other federally-sponsored project or program, the recipient shall retain the supplies for use on non-Federal sponsored activities or sell them, but shall, in either case, compensate the NHPRC for its share. The amount of compensation shall be computed in the same manner as for equipment.

(b) The recipient shall not use supplies acquired with NHPRC funds to provide services to non-Federal outside organizations for a fee that is less than private companies charge for equivalent services, unless specifically authorized by Federal statute as long as the Federal Government retains an interest in the supplies.

§ 1210.36 Intangible property.

(a) The recipient may copyright any work that is subject to copyright and was developed, or for which ownership was purchased, under an award. The NHPRC reserves a royalty-free, nonexclusive and irrevocable right to reproduce, publish, or otherwise use the work for Federal purposes, and to authorize others to do so.

(b) Recipients are subject to applicable regulations governing patents and inventions, including government-wide regulations issued by the Department of Commerce at 37 CFR Part 401, ''Rights to Inventions Made by Nonprofit Organizations and Small Business Firms Under Government Grants, Contracts and Cooperative Agreements.''

(c) Unless waived by the NHPRC, the Federal Government has the right to:

(1) Obtain, reproduce, publish or otherwise use the data first produced under an award; and

(2) Authorize others to receive, reproduce, publish, or otherwise use such data for Federal purposes.

(d) Title to intangible property and debt instruments acquired under an award or subaward vests upon acquisition in the recipient. The recipient shall use that property for the originally-authorized purpose, and the recipient shall not encumber the property without approval of the NHPRC. When no longer needed for the originally authorized purpose, disposition of the intangible property shall occur in accordance with the provisions of § 1210.34(g).

§ 1210.37 Property trust relationship.

Real property, equipment, intangible property and debt instruments that are acquired or improved with NHPRC funds shall be held in trust by the recipient as trustee for the beneficiaries of the project or program under which the property was acquired or improved. The NHPRC may require recipients to record liens or other appropriate notices of record to indicate that personal or real property has been acquired or improved with Federal funds and that use and disposition conditions apply to the property.

PROCUREMENT STANDARDS

§ 1210.40 Purpose of procurement standards.

Sections 1210.41 through 1210.48 set forth standards for use by recipients in establishing procedures for the procurement of supplies and other expendable property, equipment, real property

and other services with NHPRC funds. These standards are furnished to ensure that such materials and services are obtained in an effective manner and in compliance with the provisions of applicable Federal statutes and executive orders. No additional procurement standards or requirements shall be imposed by the NHPRC upon recipients, unless specifically required by Federal statute or executive order or approved by OMB.

§ 1210.41 Recipient responsibilities.

The standards contained in this section do not relieve the recipient of the contractual responsibilities arising under its contract(s). The recipient is the responsible authority, without recourse to the NHPRC, regarding the settlement and satisfaction of all contractual and administrative issues arising out of procurements entered into in support of an award or other agreement. This includes disputes, claims, protests of award, source evaluation or other matters of a contractual nature. Matters concerning violation of statute are to be referred to such Federal, State or local authority as may have proper jurisdiction.

§ 1210.42 Codes of conduct.

The recipient shall maintain written standards of conduct governing the performance of its employees engaged in the award and administration of contracts. No employee, officer, or agent shall participate in the selection, award, or administration of a contract supported by Federal funds if a real or apparent conflict of interest would be involved. Such a conflict would arise when the employee, officer, or agent, any member of his or her immediate family, his or her partner, or an organization which employs or is about to employ any of the parties indicated herein, has a financial or other interest in the firm selected for an award. The officers, employees, and agents of the recipient shall neither solicit nor accept gratuities, favors, or anything of monetary value from contractors, or parties to subagreements. However, recipients may set standards for situations in which the financial interest is not substantial or the gift is an unsolicited item of nominal value. The standards of conduct shall provide for disciplinary actions to be applied for violations of such standards by officers, employees, or agents of the recipient.

§ 1210.43 Competition.

All procurement transactions shall be conducted in a manner to provide, to the maximum extent practical, open and free competition. The recipient shall be alert to organizational conflicts of interest as well as noncompetitive practices among contractors that may restrict or eliminate competition or otherwise restrain trade. In order to ensure objective contractor performance and eliminate unfair competitive advantage, contractors that develop or draft specifications, requirements, statements of work, invitations for bids and/or requests for proposals shall be excluded from competing for such procurements. Awards shall be made to the bidder or offeror whose bid or offer is responsive to the solicitation and is most advantageous to the recipient, price, quality and other factors considered. Solicitations shall clearly set forth all requirements that the bidder or offeror shall fulfill in order for the bid or offer to be evaluated by the recipient. Any and all bids or offers may be rejected when it is in the recipient's interest to do so.

§ 1210.44 Procurement procedures.

(a) All recipients shall establish written procurement procedures. These procedures shall provide for, at a minimum, that paragraphs (a) (1), (2) and (3) of this section apply.

(1) Recipients avoid purchasing unnecessary items.

(2) Where appropriate, an analysis is made of lease and purchase alternatives to determine which would be the most economical and practical procurement for the Federal Government.

(3) Solicitations for goods and services provide for all of the following.

(i) A clear and accurate description of the technical requirements for the material, product or service to be procured. In competitive procurements, such a description shall not contain features which unduly restrict competition.

(ii) Requirements which the bidder/offeror must fulfill and all other factors to be used in evaluating bids or proposals.

(iii) A description, whenever practicable, of technical requirements in terms of functions to be performed or performance required, including the range of acceptable characteristics or minimum acceptable standards.

(iv) The specific features of ''brand name or equal'' descriptions that bidders are required to meet when such items are included in the solicitation.

(v) The acceptance, to the extent practicable and economically feasible, of products and services dimensioned in the metric system of measurement.

(vi) Preference, to the extent practicable and economically feasible, for products and services that conserve natural resources and protect the environment and are energy efficient.

(b) Positive efforts shall be made by recipients to utilize small businesses, minority-owned firms, and women's business enterprises, whenever possible. Recipients of Federal awards shall take all of the following steps to further this goal.

(1) Ensure that small businesses, minority-owned firms, and women's business enterprises are used to the fullest extent practicable.

(2) Make information on forthcoming opportunities available and arrange time frames for purchases and contracts to encourage and facilitate participation by small businesses, minority-owned firms, and women's business enterprises.

(3) Consider in the contract process whether firms competing for larger contracts intend to subcontract with small businesses, minority-owned firms, and women's business enterprises.

(4) Encourage contracting with consortiums of small businesses, minority-owned firms and women's business enterprises when a contract is too large for one of these firms to handle individually.

(5) Use the services and assistance, as appropriate, of such organizations as the Small Business Administration and the Department of Commerce's Minority Business Development Agency in the solicitation and utilization of small businesses, minority-owned firms and women's business enterprises.

(c) The type of procuring instruments used (e.g., fixed price contracts, cost reimbursable contracts, purchase orders, and incentive contracts) shall be determined by the recipient but shall be appropriate for the particular procurement and for promoting the best interest of the program or project involved. The ''cost-plus-a-percentage-of-cost'' or ''percentage of construction cost'' methods of contracting shall not be used.

(d) Contracts shall be made only with responsible contractors who possess the potential ability to perform successfully under the terms and conditions of the proposed procurement. Consideration shall be given to such matters as contractor integrity, record of past performance, financial and technical resources or accessibility to other necessary resources. In certain circumstances, contracts with certain parties are restricted by NARA implementation of E.O.s 12549 and 12689, ''Debarment and Suspension'' (36 CFR Part 1209).

(e) Recipients shall, on request, make available for the NHPRC, pre-award review and procurement documents, such as request for proposals or invitations for bids, independent cost estimates, etc., when any of the following conditions apply.

(1) A recipient's procurement procedures or operation fails to comply with the procurement standards in the NHPRC's implementation of this part.

(2) The procurement is expected to exceed the small purchase threshold fixed at 41 U.S.C. 403 (11) (currently $25,000) and is to be awarded without competition or only one bid or offer is received in response to a solicitation.

(3) The procurement, which is expected to exceed the small purchase threshold, specifies a ''brand name'' product.

(4) The proposed award over the small purchase threshold is to be awarded to other than the apparent low bidder under a sealed bid procurement.

(5) A proposed contract modification changes the scope of a contract or increases the contract amount by more

than the amount of the small purchase threshold.

§1210.45 Cost and price analysis.

Some form of cost or price analysis shall be made and documented in the procurement files in connection with every procurement action. Price analysis may be accomplished in various ways, including the comparison of price quotations submitted, market prices and similar indicia, together with discounts. Cost analysis is the review and evaluation of each element of cost to determine reasonableness, allocability and allowability.

§1210.46 Procurement records.

Procurement records and files for purchases in excess of the small purchase threshold shall include the following at a minimum:

(a) Basis for contractor selection,

(b) Justification for lack of competition when competitive bids or offers are not obtained, and

(c) Basis for award cost or price.

§1210.47 Contract administration.

A system for contract administration shall be maintained to ensure contractor conformance with the terms, conditions and specifications of the contract and to ensure adequate and timely follow up of all purchases. Recipients shall evaluate contractor performance and document, as appropriate, whether contractors have met the terms, conditions and specifications of the contract.

§1210.48 Contract provisions.

The recipient shall include, in addition to provisions to define a sound and complete agreement, the following provisions in all contracts. The following provisions shall also be applied to subcontracts.

(a) Contracts in excess of the small purchase threshold shall contain contractual provisions or conditions that allow for administrative, contractual, or legal remedies in instances in which a contractor violates or breaches the contract terms, and provide for such remedial actions as may be appropriate.

(b) All contracts in excess of the small purchase threshold shall contain suitable provisions for termination by the recipient, including the manner by which termination shall be effected and the basis for settlement. In addition, such contracts shall describe conditions under which the contract may be terminated for default as well as conditions where the contract may be terminated because of circumstances beyond the control of the contractor.

(c) All negotiated contracts (except those for less than the small purchase threshold) awarded by recipients shall include a provision to the effect that the recipient, the NHPRC, the Comptroller General of the United States, or any of their duly authorized representatives, shall have access to any books, documents, papers and records of the contractor which are directly pertinent to a specific program for the purpose of making audits, examinations, excerpts and transcriptions.

(d) All contracts, including small purchases, awarded by recipients and their contractors shall contain the procurement provisions of Appendix A to this Part, as applicable.

REPORTS AND RECORDS

§1210.50 Purpose of reports and records.

Sections 1210.51 through 1210.53 set forth the procedures for monitoring and reporting on the recipient's financial and program performance and the necessary standard reporting forms. They also set forth record retention requirements.

§1210.51 Monitoring and reporting program performance.

(a) Recipients are responsible for managing and monitoring each project, program, subaward, function or activity supported by the award. Recipients shall monitor subawards to ensure subrecipients have met the audit requirements as delineated in §1210.26.

(b) Except as provided in paragraph (f) of this section, interim performance reports shall be submitted every six months and shall be due 30 days after the reporting period; final reports shall be due 90 calendar days after the end of the grant period.

(c) If inappropriate, a final performance report shall not be required after completion of the project.

(d) When required, performance reports shall generally contain, for each award, brief information on each of the following.

(1) A comparison of actual accomplishments with the goals and objectives established for the period, the findings of the investigator, or both. Whenever appropriate and the output of programs or projects can be readily quantified, such quantitative data should be related to cost data for computation of unit costs.

(2) Reasons why established goals were not met, if appropriate.

(3) Other pertinent information including, when appropriate, analysis and explanation of cost overruns or high unit costs.

(e) Recipients shall not be required to submit more than the original and two copies of performance reports.

(f) Recipients shall immediately notify the NHPRC of developments that have a significant impact on the award-supported activities. Also, notification shall be given in the case of problems, delays, or adverse conditions which materially impair the ability to meet the objectives of the award. This notification shall include a statement of the action taken or contemplated, and any assistance needed to resolve the situation.

(g) The NHPRC may make site visits, as needed.

(h) The NHPRC shall comply with clearance requirements of 5 CFR Part 1320 when requesting performance data from recipients.

§ 1210.52 Financial reporting.

(a) The following forms or such other forms as may be approved by OMB are authorized for obtaining financial information from recipients.

(1) SF–269 or SF–269A, Financial Status Report.

(i) The NHPRC requires recipients to use the SF–269 or SF–269A to report the status of funds for all nonconstruction projects or programs. The NHPRC may, however, have the option of not requiring the SF–269 or SF–269A when the SF–270, Request for Advance or Reimbursement, or SF–272, Report of Federal Cash Transactions, is determined to provide adequate information to meet its needs, except that a final SF–269 or SF–269A shall be required at the completion of the project when the SF–270 is used only for advances.

(ii) The report may be on a cash or accrual basis.

(iii) The NHPRC shall determine the frequency of the Financial Status Report for each project or program, considering the size and complexity of the particular project or program. However, the report shall not be required more frequently than quarterly or less frequently than annually. A final report shall be required at the completion of the agreement.

(iv) The NHPRC shall require recipients to submit the SF–269 or SF–269A (an original and no more than two copies) no later than 30 days after the end of each specified reporting period for quarterly and semi-annual reports, and 90 calendar days for annual and final reports. Extensions of reporting due dates may be approved by NHPRC upon request of the recipient.

(2) SF–272, Report of Federal Cash Transactions.

(i) When funds are advanced to recipients the NHPRC shall require each recipient to submit the SF–272 and, when necessary, its continuation sheet, SF–272a. The NHPRC shall use this report to monitor cash advanced to recipients and to obtain disbursement information for each agreement with the recipients.

(ii) The NHPRC may require forecasts of Federal cash requirements in the ''Remarks'' section of the report.

(iii) When practical and deemed necessary, the NHPRC may require recipients to report in the ''Remarks'' section the amount of cash advances received in excess of three days. Recipients shall provide short narrative explanations of actions taken to reduce the excess balances.

(iv) Recipients shall be required to submit not more than the original and two copies of the SF–272 15 calendar days following the end of each quarter. The NHPRC may require a monthly report from those recipients receiving advances totaling $1 million or more per year.

(v) The NHPRC may waive the requirement for submission of the SF–272 for any one of the following reasons:

(A) When monthly advances do not exceed $25,000 per recipient, provided that such advances are monitored through other forms contained in this section;

(B) If, in the NHPRC's opinion, the recipient's accounting controls are adequate to minimize excessive Federal advances; or,

(C) When the electronic payment mechanisms provide adequate data.

(b) When the NHPRC needs additional information or more frequent reports, the following shall be observed.

(1) When additional information is needed to comply with legislative requirements, the NHPRC shall issue instructions to require recipients to submit such information under the ''Remarks'' section of the reports.

(2) When the NHPRC determines that a recipient's accounting system does not meet the standards in § 1210.21, additional pertinent information to further monitor awards may be obtained upon written notice to the recipient until such time as the system is brought up to standard. The NHPRC, in obtaining this information, shall comply with report clearance requirements of 5 CFR Part 1320.

(3) The NHPRC is encouraged to shade out any line item on any report if not necessary.

(4) The NHPRC may accept the identical information from the recipients in machine readable format or computer printouts or electronic outputs in lieu of prescribed formats.

(5) The NHPRC may provide computer or electronic outputs to recipients when such expedites or contributes to the accuracy of reporting.

§ 1210.53 Retention and access requirements for records.

(a) This section sets forth requirements for record retention and access to records for awards to recipients. The NHPRC will not impose any other record retention or access requirements upon recipients.

(b) Financial records, supporting documents, statistical records, and all other records pertinent to an award shall be retained for a period of three years from the date of submission of the final expenditure report or, for awards that are renewed quarterly or annually, from the date of the submission of the quarterly or annual financial report, as authorized by the NHPRC. The only exceptions are the following.

(1) If any litigation, claim, or audit is started before the expiration of the 3-year period, the records shall be retained until all litigation, claims or audit findings involving the records have been resolved and final action taken.

(2) Records for real property and equipment acquired with NHPRC funds shall be retained for 3 years after final disposition.

(3) When records are transferred to or maintained by the NHPRC, the 3-year retention requirement is not applicable to the recipient.

(4) Indirect cost rate proposals, cost allocations plans, etc. as specified in paragraph (g) of this section.

(c) Copies of original records may be substituted for the original records if authorized by the NHPRC.

(d) The NHPRC shall request transfer of certain records to its custody from recipients when it determines that the records possess long term retention value. However, in order to avoid duplicate recordkeeping, the NHPRC may make arrangements for recipients to retain any records that are continuously needed for joint use.

(e) The NHPRC, the Inspector General, Comptroller General of the United States, or any of their duly authorized representatives, have the right of timely and unrestricted access to any books, documents, papers, or other records of recipients that are pertinent to the awards, in order to make audits, examinations, excerpts, transcripts and copies of such documents. This right also includes timely and reasonable access to a recipient's personnel for the purpose of interview and discussion related to such documents. The rights of access in this paragraph are not limited to the required retention period, but shall last as long as records are retained.

(f) Unless required by statute, the NHPRC will place no restrictions on recipients that limit public access to the

records of recipients that are pertinent to an award, except when the NHPRC can demonstrate that such records shall be kept confidential and would have been exempted from disclosure pursuant to the Freedom of Information Act (5 U.S.C. 552) if the records had belonged to the NHPRC.

(g) Indirect cost rate proposals, cost allocations plans, etc. Paragraphs (g)(1) and (g)(2) of this section apply to the following types of documents, and their supporting records: indirect cost rate computations or proposals, cost allocation plans, and any similar accounting computations of the rate at which a particular group of costs is chargeable (such as computer usage chargeback rates or composite fringe benefit rates).

(1) If submitted for negotiation. If the recipient submits to the cognizant Federal agency or the subrecipient submits to the recipient the proposal, plan, or other computation to form the basis for negotiation of the rate, then the 3-year retention period for its supporting records starts on the date of such submission.

(2) If not submitted for negotiation. If the recipient is not required to submit to the NHPRC or the subrecipient is not required to submit to the recipient the proposal, plan, or other computation for negotiation purposes, then the 3-year retention period for the proposal, plan, or other computation and its supporting records starts at the end of the fiscal year (or other accounting period) covered by the proposal, plan, or other computation.

TERMINATION AND ENFORCEMENT

§ 1210.60 Purpose of termination and enforcement.

Sections 1210.61 and 1210.62 set forth uniform suspension, termination and enforcement procedures.

§ 1210.61 Termination.

(a) Awards may be terminated in whole or in part only if paragraphs (1), (2) or (3) of this section apply.

(1) By the NHPRC, if a recipient materially fails to comply with the terms and conditions of an award.

(2) By the NHPRC with the consent of the recipient, in which case the two parties shall agree upon the termination conditions, including the effective date and, in the case of partial termination, the portion to be terminated.

(3) By the recipient upon sending to the NHPRC written notification setting forth the reasons for such termination, the effective date, and, in the case of partial termination, the portion to be terminated. However, if the NHPRC determines in the case of partial termination that the reduced or modified portion of the grant will not accomplish the purposes for which the grant was made, it may terminate the grant in its entirety under either paragraphs (a)(1) or (2) of this section.

(b) If costs are allowed under an award, the responsibilities of the recipient referred to in § 1210.71(a), including those for property management as applicable, shall be considered in the termination of the award, and provision shall be made for continuing responsibilities of the recipient after termination, as appropriate.

§ 1210.62 Enforcement.

(a) Remedies for noncompliance. If a recipient materially fails to comply with the terms and conditions of an award, whether stated in a Federal statute, regulation, assurance, application, or notice of award, the NHPRC may, in addition to imposing any of the special conditions outlined in § 1210.14, take one or more of the following actions, as appropriate in the circumstances.

(1) Temporarily withhold cash payments pending correction of the deficiency by the recipient or more severe enforcement action by the NHPRC.

(2) Disallow (that is, deny both use of funds and any applicable matching credit for) all or part of the cost of the activity or action not in compliance.

(3) Wholly or partly suspend or terminate the current award.

(4) Withhold further awards for the project or program.

(5) Take other remedies that may be legally available.

(b) Hearings and appeals. In taking an enforcement action, the NHPRC shall provide the recipient an opportunity for hearing, appeal, or other administrative proceeding to which the

recipient is entitled under any statute or regulation applicable to the action involved.

(c) Effects of suspension and termination. Costs of a recipient resulting from obligations incurred by the recipient during a suspension or after termination of an award are not allowable unless the NHPRC expressly authorizes them in the notice of suspension or termination or subsequently. Other recipient costs during suspension or after termination which are necessary and not reasonably avoidable are allowable if paragraphs (c)(1) and (2) of this section apply.

(1) The costs result from obligations which were properly incurred by the recipient before the effective date of suspension or termination, are not in anticipation of it, and in the case of a termination, are noncancellable.

(2) The costs would be allowable if the award were not suspended or expired normally at the end of the funding period in which the termination takes effect.

(d) Relationship to debarment and suspension. The enforcement remedies identified in this section, including suspension and termination, do not preclude a recipient from being subject to debarment and suspension under E.O.s 12549 and 12689 and NARA implementing regulations (see § 1210.13).

Subpart D—After-the-Award Requirements

§ 1210.70 Purpose.

Sections 1210.71 through 1210.73 contain closeout procedures and other procedures for subsequent disallowances and adjustments.

§ 1210.71 Closeout procedures.

(a) Recipients shall submit, within 90 calendar days after the date of completion of the award, all financial, performance, and other reports as required by the terms and conditions of the award. The NHPRC may approve extensions when requested by the recipient.

(b) Unless the NHPRC authorizes an extension, a recipient shall liquidate all obligations incurred under the award not later than 90 calendar days after the funding period or the date of completion as specified in the terms and conditions of the award or in agency implementing instructions.

(c) The NHPRC shall make prompt payments to a recipient for allowable reimbursable costs under the award being closed out.

(d) The recipient shall promptly refund any balances of unobligated cash that the NHPRC has advanced or paid and that is not authorized to be retained by the recipient for use in other projects. OMB Circular A–129 governs unreturned amounts that become delinquent debts.

(e) When authorized by the terms and conditions of the award, the NHPRC shall make a settlement for any upward or downward adjustments to the Federal share of costs after closeout reports are received.

(f) The recipient shall account for any real and personal property acquired with Federal funds or received from the Federal Government in accordance with §§ 1210.31 through 1210.37.

(g) In the event a final audit has not been performed prior to the closeout of an award, the NHPRC shall retain the right to recover an appropriate amount after fully considering the recommendations on disallowed costs resulting from the final audit.

§ 1210.72 Subsequent adjustments and continuing responsibilities.

(a) The closeout of an award does not affect any of the following.

(1) The right of the NHPRC to disallow costs and recover funds on the basis of a later audit or other review.

(2) The obligation of the recipient to return any funds due as a result of later refunds, corrections, or other transactions.

(3) Audit requirements in § 1210.26.

(4) Property management requirements in §§ 1210.31 through 1210.37.

(5) Records retention as required in § 1210.53.

(b) After closeout of an award, a relationship created under an award may be modified or ended in whole or in part with the consent of the NHPRC and the recipient, provided the responsibilities of the recipient referred to in § 1210.73(a), including those for property

management as applicable, are considered and provisions made for continuing responsibilities of the recipient, as appropriate.

§ 1210.73 Collection of amounts due.

(a) Any funds paid to a recipient in excess of the amount to which the recipient is finally determined to be entitled under the terms and conditions of the award constitute a debt to the Federal Government. If not paid within a reasonable period after the demand for payment, the NHPRC may reduce the debt by:

(1) Making an administrative offset against other requests for reimbursements;

(2) Withholding advance payments otherwise due to the recipient; or

(3) Taking other action permitted by statute.

(b) Except as otherwise provided by law, the NHPRC shall charge interest on an overdue debt in accordance with 4 CFR Chapter II, ''Federal Claims Collection Standards.''

APPENDIX A TO PART 1210—CONTRACT PROVISIONS

All contracts, awarded by a recipient including small purchases, shall contain the following provisions as applicable:

1. Equal Employment Opportunity—All contracts shall contain a provision requiring compliance with E.O. 11246, ''Equal Employment Opportunity,'' as amended by E.O. 11375, ''Amending Executive Order 11246 Relating to Equal Employment Opportunity,'' and as supplemented by regulations at 41 CFR part 60, ''Office of Federal Contract Compliance Programs, Equal Employment Opportunity, Department of Labor.''

2. Copeland ''Anti-Kickback'' Act (18 U.S.C. 874 and 40 U.S.C. 276c)—All contracts and subgrants in excess of $2,000 for construction or repair awarded by recipients and subrecipients shall include a provision for compliance with the Copeland ''Anti-Kickback'' Act (18 U.S.C. 874), as supplemented by Department of Labor regulations (29 CFR part 3, ''Contractors and Subcontractors on Public Building or Public Work Financed in Whole or in Part by Loans or Grants from the United States''). The Act provides that each contractor or subrecipient shall be prohibited from inducing, by any means, any person employed in the construction, completion, or repair of public work, to give up any part of the compensation to which he is otherwise entitled. The recipient shall report all suspected or reported violations to the Federal awarding agency.

3. Davis-Bacon Act, as amended (40 U.S.C. 276a to a–7)—When required by Federal program legislation, all construction contracts awarded by the recipients and subrecipients of more than $2,000 shall include a provision for compliance with the Davis-Bacon Act (40 U.S.C. 276a to a–7) and as supplemented by Department of Labor regulations (29 CFR part 5, ''Labor Standards Provisions Applicable to Contracts Governing Federally Financed and Assisted Construction''). Under this Act, contractors shall be required to pay wages to laborers and mechanics at a rate not less than the minimum wages specified in a wage determination made by the Secretary of Labor. In addition, contractors shall be required to pay wages not less than once a week. The recipient shall place a copy of the current prevailing wage determination issued by the Department of Labor in each solicitation and the award of a contract shall be conditioned upon the acceptance of the wage determination. The recipient shall report all suspected or reported violations to the Federal awarding agency.

4. Contract Work Hours and Safety Standards Act (40 U.S.C. 327–333)—Where applicable, all contracts awarded by recipients in excess of $2,000 for construction contracts and in excess of $2,500 for other contracts that involve the employment of mechanics or laborers shall include a provision for compliance with Sections 102 and 107 of the Contract Work Hours and Safety Standards Act (40 U.S.C. 327–333), as supplemented by Department of Labor regulations (29 CFR part 5). Under Section 102 of the Act, each contractor shall be required to compute the wages of every mechanic and laborer on the basis of a standard work week of 40 hours. Work in excess of the standard work week is permissible provided that the worker is compensated at a rate of not less than 1½ times the basic rate of pay for all hours worked in excess of 40 hours in the work week. Section 107 of the Act is applicable to construction work and provides that no laborer or mechanic shall be required to work in surroundings or under working conditions which are unsanitary, hazardous or dangerous. These requirements do not apply to the purchases of supplies or materials or articles ordinarily available on the open market, or contracts for transportation or transmission of intelligence.

5. Rights to Inventions Made Under a Contract or Agreement—Contracts or agreements for the performance of experimental, developmental, or research work shall provide for the rights of the Federal Government and the recipient in any resulting invention in accordance with 37 CFR part 401, ''Rights to Inventions Made by Nonprofit Organizations and Small Business Firms Under

Government Grants, Contracts and Cooperative Agreements,'' and any implementing regulations issued by the awarding agency.

6. Clean Air Act (42 U.S.C. 7401 *et seq.*) and the Federal Water Pollution Control Act (33 U.S.C. 1251 *et seq.*), as amended—Contracts and subgrants of amounts in excess of $100,000 shall contain a provision that requires the recipient to agree to comply with all applicable standards, orders or regulations issued pursuant to the Clean Air Act (42 U.S.C. 7401 *et seq.*) and the Federal Water Pollution Control Act as amended (33 U.S.C. 1251 *et seq.*). Violations shall be reported to the Federal awarding agency and the Regional Office of the Environmental Protection Agency (EPA).

7. Byrd Anti-Lobbying Amendment (31 U.S.C. 1352)—Contractors who apply or bid for an award of $100,000 or more shall file the required certification. Each tier certifies to the tier above that it will not and has not used Federal appropriated funds to pay any person or organization for influencing or attempting to influence an officer or employee of any agency, a member of Congress, officer or employee of Congress, or an employee of a member of Congress in connection with obtaining any Federal contract, grant or any other award covered by 31 U.S.C. 1352. Each tier shall also disclose any lobbying with non-Federal funds that takes place in connection with obtaining any Federal award. Such disclosures are forwarded from tier to tier up to the recipient.

8. Debarment and Suspension (E.O. 12549 and E.O. 12689)—No contract shall be made to parties listed on the General Services Administration's List of Parties Excluded from Federal Procurement or Nonprocurement Programs in accordance with E.O. 12549 and E.O. 12689, ''Debarment and Suspension.'' This list contains the names of parties debarred, suspended, or otherwise excluded by agencies, and contractors declared ineligible under statutory or regulatory authority other than E.O. 12549. Contractors with awards that exceed the small purchase threshold shall provide the required certification regarding its exclusion status and that of its principal employees.

SUBCHAPTER B—RECORDS MANAGEMENT

PART 1220—FEDERAL RECORDS; GENERAL

Sec.
1220.1 Scope of subchapter.
1220.2 Responsibility for records management programs.

Subpart A—General Provisions

1220.10 Authority.
1220.12 Applicability.
1220.14 General definitions.
1220.16 Reports to the Congress and the Director of the Office of Management and Budget.
1220.18 Inspection of records subject to the Privacy Act of 1974.

Subpart B—Agency Records Management Programs

1220.30 Authority.
1220.32 Program content.
1220.34 Creation of records.
1220.36 Maintenance and use of records.
1220.38 Disposition of records.
1220.40 Liaison offices.
1220.42 Agency internal evaluations.

Subpart C—NARA Evaluation Program

1220.50 Authority.
1220.52 Purpose and scope.
1220.54 Evaluation process.
1220.56 Evaluation report.
1220.58 Agency action plans and progress reports.
1220.60 Followup notification and reviews.

AUTHORITY: 44 U.S.C. 2104(a) and chs. 29 and 33.

SOURCE: 50 FR 26930, June 28, 1985, unless otherwise noted.

§ 1220.1 Scope of subchapter.

Subchapter B prescribes policies for Federal agencies' records management programs relating to records creation and maintenance, adequate documentation, and proper records disposition.

§ 1220.2 Responsibility for records management programs.

The National Archives and Records Administration Act of 1984 amended the records management statutes to divide records management responsibilities between the National Archives and Records Administration (NARA) and the General Services Administration (GSA). Under the Act, NARA is responsible for adequacy of documentation and records disposition and GSA is responsible for economy and efficiency in records management. NARA regulations are codified in this subchapter. GSA records management regulations are codified in 41 CFR chapter 201, Subchapters A and B. Federal agency records management programs must be in compliance with regulations promulgated by both NARA and GSA.

[57 FR 19807, May 8, 1992]

Subpart A—General Provisions

§ 1220.10 Authority.

The regulations in this part are issued under the provisions of the National Archives and Records Administration Act of 1984 (Pub. L. 98–497, 44 U.S.C. 101 *note*).

§ 1220.12 Applicability.

The regulations in subchapter B apply to all Federal agencies as defined in § 1220.14.

§ 1220.14 General definitions.

As used in subchapter B—

Agency (see *Executive agency* and *Federal agency*).

Adequate and proper documentation means a record of the conduct of Government business that is complete and accurate to the extent required to document the organization, functions, policies, decisions, procedures, and essential transactions of the agency and that is designed to furnish the information necessary to protect the legal and financial rights of the Government and of persons directly affected by the agency's activities.

Appraisal is the process by which the National Archives and Records Administration (NARA) determines the value and thus the final disposition of Federal records, making them either temporary or permanent.

Comprehensive schedule is a printed agency manual or directive containing descriptions of and disposition instructions for all documentary materials,

record and nonrecord, created by a Federal agency or major component of an Executive department. Unless taken from the General Records Schedules (GRS) issued by NARA, the disposition instructions for agency records must be approved by NARA on one or more Standard Form(s) 115, Request for Records Disposition Authority, prior to issuance by the agency. The disposition instructions for the nonrecord material are established by the agency and do not require NARA approval.

Contingent records are records whose final disposition is dependent on an action or event, such as sale of property or destruction of a facility, which will take place at some unspecified time in the future.

Disposition means those actions taken, after appraisal by NARA, regarding records no longer needed for the conduct of the regular current business of the agency. 44 U.S.C. 2901(5) defines *records disposition* as any activity with respect to:

(a) Disposal of temporary records no longer needed for the conduct of business by destruction or donation to an eligible person or organization outside of Federal custody in accordance with the requirements of part 1228 of this chapter.

(b) Transfer of records to Federal agency storage facilities or records centers;

(c) Transfer to the National Archives of the United States of records determined to have sufficient historical or other value to warrant continued preservation; or

(d) Transfer of records from one Federal agency to any other Federal agency in accordance with the requirements of part 1228 of this chapter.

Documentary materials is a collective term for records and nonrecord materials that refers to all media on which information is recorded, regardless of the nature of the medium or the method or circumstances of recording.

Evaluation means the selective or comprehensive inspection, audit, or review of one or more Federal agency records management programs for effectiveness and for compliance with applicable laws and regulations. It includes recommendations for correcting or improving records management policies, procedures, and activities, and follow-up activities, including reporting on such activities, for implementing the recommendations.

Executive agency means any executive department or independent establishment in the executive branch of the Government, including any wholly-owned Government corporation.

Federal agency means any executive agency or any establishment in the legislative or judicial branch of the Government (except the Supreme Court, Senate, the House of Representatives, and the Architect of the Capitol and any activities under his direction). (44 U.S.C. 2901(14)).

File means an arrangement of records. The term is used to denote papers, photographs, photographic copies, maps, machine-readable information, or other recorded information regardless of physical form or characteristics, accumulated or maintained in filing equipment, boxes, or machine-readable media, or on shelves, and occupying office or storage space.

National Archives of the United States means those records that have been determined by the Archivist of the United States to have sufficient historical or other value to warrant their continued preservation by the Federal Government and that have been transferred to the legal custody of the Archivist of the United States on a Standard Form 258 (Request to Transfer, Approval, and Receipt of Records to National Archives of the United States).

Nonrecord materials are those Federally owned informational materials that do not meet the statutory definition of records (44 U.S.C. 3301) or that have been excluded from coverage by the definition. Excluded materials are extra copies of documents kept only for reference, stocks of publications and processed documents, and library or museum materials intended solely for reference or exhibit.

Permanent record means any Federal record that has been determined by NARA to have sufficient value to warrant its preservation in the National Archives. Permanent records include all records accessioned by NARA's Office of the National Archives and later increments of the same records, and

those for which the disposition is *permanent* on SF 115s, Request for Records Disposition Authority, approved by NARA on or after May 14, 1973.

Recordkeeping requirements means all statements, in statutes, regulations, and agency directives or authoritative issuances, providing general and specific guidance for Federal agency personnel on particular records to be created and maintained by the agency.

Recordkeeping system is a manual or automated system in which records are collected, organized, and categorized to facilitate their preservation, retrieval, use, and disposition.

Records include all books, papers, maps, photographs, machine readable materials, or other documentary materials, regardless of physical form or characteristics, made or received by an agency of the United States Government under Federal law or in connection with the transaction of public business and preserved or appropriate for preservation by that agency or its legitimate successor as evidence of the organization, functions, policies, decisions, procedures, operations or other activities of the Government or because of the informational value of the data in them (44 U.S.C. 3301).

Records maintenance and use, as used in subchapter B, means any activity involving location of records of a Federal agency or the storage, retrieval, and handling of records kept at office file locations by or for a Federal agency.

Records management, as used in subchapter B, means the planning, controlling, directing, organizing, training, promoting, and other managerial activities involved with respect to records creation, records maintenance and use, and records disposition in order to achieve adequate and proper documentation of the policies and transactions of the Federal Government and effective and economical management of agency operations.

Records schedule or *schedule* means

(a) An SF 115, Request for Records Disposition Authority, that has been approved by NARA to authorize the disposition of Federal records;

(b) A General Records Schedule (GRS) issued by NARA; or

(c) A printed agency manual or directive containing the records descriptions and disposition instructions approved by NARA on one or more SF 115s or issued by NARA in the GRS. (See also the definition *Comprehensive schedule.*)

Series means file units or documents arranged according to a filing system or kept together because they relate to a particular subject or function, result from the same activity, document a specific kind of transaction, take a particular physical form, or have some other relationship arising out of their creation, receipt, or use, such as restrictions on access and use. Also called a *records series.*

Temporary records. A temporary record is any record which has been determined by the Archivist of the United States to have insufficient value (on the basis of current standards) to warrant its preservation by the National Archives and Records Administration. This determination may take the form of:

(a) A series of records designated as disposable in an agency records disposition schedule approved by NARA (Standard Form 115, Request for Records Disposition Authority); or

(b) A series of records designated as disposable in a General Records Schedule.

Unscheduled records are records the final disposition of which has not been approved by NARA. Unscheduled records are those that have not been included on a Standard Form 115, Request for Records Disposition Authority, approved by NARA; those described but not authorized for disposal on an SF 115 approved prior to May 14, 1973; and those described on an SF 115 but not approved by NARA (withdrawn, canceled, or disapproved).

[45 FR 5705, Jan. 24, 1980 and 50 FR 26931, 26933, June 28, 1985, as amended at 52 FR 34134, Sept. 9, 1987; 55 FR 27423, 27427, July 2, 1990; 57 FR 19807, May 8, 1992; 59 FR 28783, June 3, 1994; 60 FR 44639, Aug. 28, 1995]

§ 1220.16 Reports to the Congress and the Director of the Office of Management and Budget.

Under 44 U.S.C. 2904(c)(8), the Archivist of the United States is required to report to Congress and the Office of Management and Budget annually on

the results of records management activities, including evaluations of responses by Federal agencies to any recommendations resulting from studies or inspections conducted by NARA.

§1220.18 Inspection of records subject to the Privacy Act of 1974.

In accordance with 44 U.S.C. 2906, when NARA inspects an agency record which is contained in a system of records subject to the Privacy Act of 1974 (5 U.S.C. 552a), the records shall be maintained by the Archivist or his designee as a record contained in a system of records or considered to be a record contained in a system of records for the purposes of subsections (b), (c), and (i) of section 552a of title 5.

Subpart B—Agency Records Management Programs

§1220.30 Authority.

Section 3101 of title 44 U.S.C. requires the head of each Federal agency to make and preserve records containing adequate and proper documentation of the organization, functions, policies, decisions, procedures and essential transactions of the agency and designed to furnish the information necessary to protect the legal and financial rights of the Government and of persons directly affected by the agency's activities.

§1220.32 Program content.

Agency programs shall, among other things, provide for:

(a) Cooperation with NARA in developing and applying standards, procedures, and techniques designed to improve the management of records, promote the maintenance and security of records deemed appropriate for permanent preservation, and facilitate the segregation and disposal of temporary records.

(b) Compliance with sections 2101–2117, 2501–2507, 2901–2909, 3101–3107, and 3301–3314 of title 44 U.S.C. and with NARA regulations issued in title 36 of the Code of Federal Regulations.

§1220.34 Creation of records.

Adequate records management controls over the creation of Federal agency records shall be instituted to ensure that agency functions are adequately and properly documented. Federal agencies shall also comply with GSA regulations on creation of records found in 41 CFR part 201-9.

[57 FR 19807, May 8, 1992]

§1220.36 Maintenance and use of records.

Adequate records management controls over the maintenance and use of records shall be instituted to ensure that permanent records can be located when needed and that they are preserved for eventual transfer to the National Archives of the United States. Agencies shall also be in compliance with GSA regulations on the maintenance and use of records found in 41 CFR part 201-9.

[57 FR 19807, May 8, 1992]

§1220.38 Disposition of records.

Provision shall be made to ensure that permanent records are preserved but that records no longer of current use to an agency are promptly disposed of or retired. Effective techniques for the accomplishment of these ends are the development of records disposition schedules; the transfer of records to records centers and the National Archives of the United States; the conversion of the information to other media; and the disposal of valueless records. Disposition of any records requires the approval of the Archivist of the United States (see part 1228 of this chapter).

§1220.40 Liaison offices.

An office or offices within each Federal agency shall be assigned responsibility for the development of the records management program required by this part. The office to which responsibility is assigned shall be reported to the Office of Records Administration, National Archives (NIA), Washington, DC 20408. The name, title, and telephone number of the official or officials authorized by the head of the agency to approve records disposition schedules and transfers of records to the custody of the National Archives shall also be submitted to the Office of Records Administration.

§ 1220.42 Agency internal evaluations.

Each agency shall periodically evaluate its records management programs relating to records creation and recordkeeping requirements, maintenance and use of records, and records disposition. These evaluations shall include periodic monitoring of staff determinations of the record status of documentary materials, including electronic mail, and implementation of these decisions. These evaluations should determine compliance with NARA regulations in subchapter B of this chapter and assess the effectiveness of the agency's records management program.

[60 FR 44639, Aug. 28, 1995]

Subpart C—NARA Evaluation Program

SOURCE: 59 FR 28783, June 3, 1994, unless otherwise noted.

§ 1220.50 Authority.

44 U.S.C. chapter 29 vests in the Archivist of the United States the responsibility for providing guidance and assistance to Federal agencies with respect to ensuring adequate and proper documentation and proper records disposition. Sections 2904 and 2906 specifically authorize the Archivist to conduct inspections or surveys of records and records management programs and practices within and between Federal agencies and require officers and employees of agencies to cooperate fully in such inspections. Section 2904 also authorizes the Archivist to report to the appropriate oversight and appropriations committees of the Congress and the Director of OMB on the results of inspections, the responses by agencies to NARA evaluation recommendations, and estimates of the costs to the Federal government resulting from the failure to implement such recommendations.

§ 1220.52 Purpose and scope.

(a) NARA evaluations assess how effectively Federal agencies make and preserve complete and accurate records of their organization, functions, policies, decisions, procedures, and essential transactions; and maintain an active, continuing records management program including proper records disposition. Agencies shall be evaluated for compliance with requirements in 44 U.S.C. chapters 31 and 33 and all the regulations issued thereunder in 36 CFR subchapter B.

(b) NARA evaluations may include comprehensive reviews of agency records management programs, or selective reviews focused on adequate and proper documentation, on records disposition, on the management of specific types of record media or on the management of records in particular program areas. NARA evaluations may be of one agency or may be multi-agency. These evaluations may be conducted solely within headquarters offices, only at field locations, or at a combination of field sites and headquarters.

(c) Evaluations will involve site visits by NARA; submission by NARA to the agency of a written report containing findings, analyses, and recommendations; and submission to NARA by the agency of an action plan for implementing the recommendations followed by regular progress reports. Interagency report control number 0153–NARA–AR has been assigned to the action plan and progress reports in accordance with 41 CFR subpart 201–45.6.

§ 1220.54 Evaluation process.

(a) NARA shall select Federal agencies to be evaluated on the basis of perceived need by NARA or specific request by the agency, or on the basis of a compliance monitoring cycle developed by NARA. NARA will determine the scope of the evaluation. An agency may request an evaluation of its records management program by contacting the Assistant Archivist for Records Administration; however, the final determination of agencies to be evaluated will be made by NARA. The heads of agencies will be notified in writing by the Archivist of the United States of the intent to conduct an evaluation and the scope of the evaluation at least 180 calendar days prior to initiating the evaluation.

(b) Once NARA has notified the agency, the agency head will, by the date specified in the Archivist's letter:

(1) Acknowledge in writing NARA's intention to evaluate, and provide the Archivist with the name and telephone number of the senior official with overall responsibility for records management and of a headquarters official who will work with NARA to facilitate the evaluation process;

(2) Provide written notification of the evaluation to all appropriate offices and employees and contractors potentially involved; this notification will include instructions to cooperate with NARA by setting up interviews, providing requested information, and making records available for inspection;

(3) Provide NARA with a copy of the written notification in paragraph (b)(2) of this section and with a list of names and telephone numbers of officials responsible for records management in field sites, if applicable, who will work with NARA during the evaluation;

(4) For comprehensive evaluations, provide NARA with a set of internal records management directives, orders, bulletins, or similar authoritative issuances; copies of the two most recent internal records management evaluations; and any special records-related reports. Included may be: issuances relating to adequate and proper documentation and record-keeping requirements; personal papers; management and disposition of textual, electronic, audiovisual, cartographic and architectural, micrographic, and vital records; disaster mitigation and recovery; and any other records-related documentation requested by NARA. A subset of this documentation will be requested for more limited evaluations;

(5) Provide NARA with a current version of the agency manual(s) covering records creation, maintenance, storage, and disposition, and a list of information systems maintained as required by OMB Circular A–130, section 9a(5), and a list of offices and/or functions and activities not currently covered by schedules;

(6) Arrange for appropriate management and program officials in headquarters and, if applicable, at field sites to be briefed by NARA at the beginning and at the end of the evaluation process; and

(7) Take immediate corrective action regarding any serious problems that NARA may bring to the agency's attention during the course of the evaluation process such as the unauthorized destruction of records or the unauthorized donation or other transfer of records to non-NARA facilities.

§ 1220.56 Evaluation report.

(a) NARA will submit a draft evaluation report for factual review and comment to the agency within 120 calendar days of the last evaluation site visit or exit briefing. After receipt of agency comments, NARA will finalize the report, incorporating any changes resulting from factual errors identified by the agency. The final report will be transmitted by the Archivist to the head of the agency within 30 calendar days of receiving comments from the agency.

(b) The head of the agency will:

(1) Comment within 60 calendar days, in writing, on the contents of the draft report. If necessary, agencies can request extensions. No response from the agency within the allotted time will indicate that the agency concurs in the factual accuracy of the draft report.

(2) Review the final report and assign implementation responsibility; and

(3) Distribute the final report to all concerned and appropriate persons and offices.

§ 1220.58 Agency action plans and progress reports.

(a) *Action plans.* (1) The action plan will be submitted to NARA within 90 calendar days after the date of transmittal of the final report. If necessary, agencies can request extensions. The plan shall be submitted by the agency head or the designated senior official for information resources management. The action plan will include:

(i) The name of the senior official and the office responsible for coordinating implementation agency-wide;

(ii) The specific action(s) the agency will take to implement each evaluation report recommendation. If an agency is unable to implement a recommendation, the rationale for not acting shall be documented in the action plan;

(iii) The name of the official and office or program responsible for the

overall coordination of the agency's followup actions who will be the liaison with NARA;

(iv) The estimated time needed to complete each action and the proposed quarter and year for starting and completing each action;

(v) Major milestones with dates for tracking the completion of implementation actions that are expected to extend longer than 3 years past the date of the action plan; and,

(vi) If requested by NARA, separate action plans for each field site visited, incorporating the information required by paragraphs (a)(1)(i) through (a)(1)(v) of this section.

(2) NARA will analyze the action plan(s) submitted by the agency for adequacy and effectiveness in implementing the recommendations contained in the evaluation report. NARA will provide comments to the agency on the plan(s) within 60 calendar days.

(3) The agency will revise the action plan until it is approved by NARA.

(b) *Progress reports.* (1) Once the action plan(s) has been approved by NARA, the head of the agency will submit progress reports to NARA every 6 months. The reports will include:

(i) A description of what has been accomplished on each action since the last report;

(ii) The current status of the action;

(iii) Any changes in the offices or programs responsible for over-all or specific action implementation; and,

(iv) If appropriate, explanation of any delays in implementation and revised target dates and milestones for completion of the action.

(2) The agency will continue to submit these progress reports until NARA and the agency agree all actions have been completed, NARA and the agency agree that the agency has implemented the recommendation(s) to the fullest extent possible, or NARA indicates in writing that regular progress reports are no longer required.

(3) NARA will review and comment on agency progress reports, and work closely with the agency to provide assistance in evaluation implementation.

§ 1220.60 Follow-up notification and reviews.

(a) If NARA determines that there is not substantial progress in the full implementation of evaluation recommendations or that the agency has not corrected serious problems identified in the report, the Archivist, after notifying the head of the agency, may notify Congress and appropriate Federal oversight agencies of the evaluation findings and the agency response.

(b) NARA may initiate follow-up reviews at specific offices or field sites. Results of these follow-up reviews shall be communicated to the head of the agency and, if NARA determines it to be appropriate, to Congress and Federal oversight agencies.

PART 1222—CREATION AND MAINTENANCE OF FEDERAL RECORDS

Subpart A—General

Sec.
1222.10 Authority.
1222.12 Defining Federal records.

Subpart B—Program Requirements

1222.20 Agency responsibilities.

Subpart C—Standards for Agency Recordkeeping Requirements

1222.30 Purpose.
1222.32 General requirements.
1222.34 Identifying Federal records.
1222.36 Identifying personal papers.
1222.38 Categories of documentary materials to be covered by recordkeeping requirements.
1222.40 Removal of records.
1222.42 Removal of nonrecord materials.
1222.44 Directives documenting agency programs, policies, and procedures.
1222.46 Recordkeeping requirements of other agencies.
1222.48 Data created or received and maintained for the Government by contractors.
1222.50 Records maintenance.

AUTHORITY: 44 U.S.C. 2904, 3101, and 3102.

SOURCE: 55 FR 27423, July 2, 1990, unless otherwise noted.

Subpart A—General

§ 1222.10 Authority.

(a) 44 U.S.C. 2904, vests in the Archivist of the United States responsibility

for providing guidance and assistance to Federal agencies with respect to ensuring adequate and proper documentation of the policies and transactions of the Federal Government, including developing and issuing standards to improve the management of records.

(b) 44 U.S.C. 3101, requires that the head of each Federal agency shall make and preserve records containing adequate and proper documentation of the organization, functions, policies, decisions, procedures, and essential transactions of the agency and designed to furnish the information necessary to protect the legal and financial rights of the Government and of persons directly affected by the agency's activities.

(c) 44 U.S.C. 3102, requires that the head of each Federal agency shall establish and maintain an active, continuing program for the economical and efficient management of the records of the agency. The program, among other things, shall provide for—

(1) Effective controls over the creation, and over the maintenance and use of records in the conduct of current business;

(2) Cooperation with the Administrator of General Services and the Archivist in applying standards, procedures, and techniques designed to improve the management of records, promote the maintenance and security of records deemed appropriate for preservation, and facilitate the segregation and disposal of records of temporary value.

§ 1222.12 Defining Federal records.

(a) The statutory definition of Federal records is contained in 44 U.S.C. 3301 and is stated in § 1220.14 of this chapter.

(b) Several key terms, phrases, and concepts in the statutory definition of records are defined as follows:

(1) *Documentary materials* is a collective term for records, nonrecord materials, and personal papers that refers to all media containing recorded information, regardless of the nature of the media or the method(s) or circumstance(s) of recording.

(2) *Regardless of physical form or characteristics* means that the medium may be paper, film, disk, or other physical type or form; and that the method of recording may be manual, mechanical, photographic, electronic, or any other combination of these or other technologies.

(3) *Made* means the act of creating and recording information by agency personnel in the course of their official duties, regardless of the method(s) or the medium involved. The act of recording is generally identifiable by the circulation of the information to others or by placing it in files accessible to others.

(4) *Received* means the acceptance or collection of documentary materials by agency personnel in the course of their official duties regardless of their origin (for example, other units of their agency, private citizens, public officials, other agencies, contractors, Government grantees) and regardless of how transmitted (in person or by messenger, mail, electronic means, or by any other method). In this context, the term does not refer to misdirected materials. It may or may not refer to loaned or seized materials depending on the conditions under which such materials came into agency custody or were used by the agency. Advice of legal counsel should be sought regarding the ''record'' status of loaned or seized materials.

(5) *Preserved* means the filing, storing, or any other method of systematically maintaining documentary materials by the agency. This term covers materials not only actually filed or otherwise systematically maintained but also those temporarily removed from existing filing systems.

(6) *Appropriate for preservation* means documentary materials made or received which in the judgment of the agency should be filed, stored, or otherwise systematically maintained by an agency because of the evidence of agency activities or information they contain, even though the materials may not be covered by its current filing or maintenance procedures.

[55 FR 27423, July 2, 1990; 55 FR 31982, Aug. 6, 1990]

Subpart B—Program Requirements

§ 1222.20 Agency responsibilities.

(a) The head of each Federal agency, in meeting the requirements of 44 U.S.C. 2904, 3101, and 3102, shall observe the responsibilities and standards set forth in this part. Agencies are also subject to regulations issued by the General Services Administration (GSA) in 41 CFR chapter 201.

(b) Each Federal agency shall:

(1) Assign to one or more offices of the agency the responsibility for the development and implementation of agency-wide programs to identify, develop, issue, and periodically review recordkeeping requirements for records for all agency activities at all levels and locations in all media including paper, microform, audiovisual, cartographic, and electronic (including those created or received using electronic mail);

(2) Integrate programs for the identification, development, issuance, and periodic review of recordkeeping requirements with other records and information resources management programs of the agency, including the requirement of close coordination between the office designated in 36 CFR 1222.20(b)(1) and the office assigned overall records management responsibility in accordance with 36 CFR 1220.40, if the two are different;

(3) Issue a directive(s) establishing program objectives, responsibilities, and authorities for agency recordkeeping requirements. Copies of the directive(s) (including subsequent amendments or supplements) shall be disseminated throughout the agency, as appropriate, and a copy shall be sent to NARA (NI);

(4) Establish procedures for the participation of records management officials in developing new or revised agency programs, processes, systems, and procedures in order to ensure that adequate recordkeeping requirements are established and implemented;

(5) Ensure that adequate training is provided to all agency personnel on policies, responsibilities, and techniques for the implementation of recordkeeping requirements and the distinction between records and nonrecord materials, regardless of media, including those materials created by individuals using computers to send or receive electronic mail.

(6) Develop and implement records schedules for all records created and received by the agency and obtain NARA approval of the schedules in accordance with 36 CFR part 1228;

(7) Ensure compliance with applicable Governmentwide policies, procedures, and standards relating to recordkeeping requirements as may be issued by the Office of Management and Budget, the General Services Administration, the National Archives and Records Administration, the National Institute of Standards and Technology, or other agencies, as appropriate;

(8) Review recordkeeping requirements, as part of the periodic information resources management reviews required by 44 U.S.C. 3506, or the periodic records management evaluations required by 36 CFR 1220.54, in order to validate their currency and to ensure that recordkeeping requirements are being implemented.

(9) Remind all employees annually of the agency's recordkeeping policies and of the sanctions provided for the unlawful removal or destruction of Federal records (18 U.S.C. 2071).

[55 FR 27423, July 2, 1990, as amended at 58 FR 49194, Sept. 22, 1993; 60 FR 44640, Aug. 28, 1995]

Subpart C—Standards for Agency Recordkeeping Requirements

§ 1222.30 Purpose.

(a) The clear articulation of recordkeeping requirements by Federal agencies is essential if agencies are to meet the requirements of 44 U.S.C. 3101 and 3102 with respect to creating, receiving, maintaining, and preserving adequate and proper documentation, and with respect to maintaining an active, continuing program for the economical and efficient management of agency records.

(b) Although many agencies regularly issue recordkeeping requirements for routine operations, many do not adequately specify such requirements for documenting policies and decisions, nor do they provide sufficient guidance on distinguishing between records and nonrecord materials, and maintaining

records created or received on electronic mail systems.

(c) Since agency functions, activities, and administrative practices vary so widely, NARA cannot issue a comprehensive list of all categories of documentary materials appropriate for preservation by an agency as evidence of its activities or because of the information they contain. In all cases, the agency must consider the intent or circumstances of creation or receipt of the materials to determine whether their systematic maintenance shall be required.

[55 FR 27423, July 2, 1990, as amended at 60 FR 44640, Aug. 28, 1995]

§ 1222.32 General requirements.

Agencies shall identify, develop, issue, and periodically review their recordkeeping requirements for all agency operations and for records in all media, including those records created or received on electronic mail systems. Recordkeeping requirements shall:

(a) Identify and prescribe specific categories of documentary materials to be systematically created or received and maintained by agency personnel in the course of their official duties;

(b) Prescribe the use of materials and recording techniques that ensure the preservation of records as long as they are needed by the Government;

(c) Prescribe the manner in which these materials shall be maintained wherever held; and

(d) Distinguish records from nonrecord materials and, with the approval of the Archivist of the United States, prescribe action for the final disposition of agency records when they are no longer needed for current business.

[55 FR 27423, July 2, 1990, as amended at 60 FR 44640, Aug. 28, 1995]

§ 1222.34 Identifying Federal records.

(a) *General.* To ensure that complete and accurate records are made and retained in the Federal Government, it is essential that agencies distinguish between records and nonrecord materials by the appropriate application of the definition of records (see 44 U.S.C. 3301 and 36 CFR 1220.14) to agency documentary materials. Applying the definition of records to most documentary materials created or received by agencies presents few problems when agencies have established and periodically updated recordkeeping requirements covering all media and all agency activities at all levels and locations.

(b) *Record status.* Documentary materials are records when they meet both of the following conditions:

(1) They are made or received by an agency of the United States Government under Federal law or in connection with the transaction of agency business; and

(2) They are preserved or are appropriate for preservation as evidence of agency organization and activities or because of the value of the information they contain.

(c) *Working files and similar materials.* Working files, such as preliminary drafts and rough notes, and other similar materials shall be maintained for purposes of adequate and proper documentation if:

(1) They were circulated or made available to employees, other than the creator, for official purposes such as approval, comment, action, recommendation, follow-up, or to communicate with agency staff about agency business; and

(2) They contain unique information, such as substantive annotations or comments included therein, that adds to a proper understanding of the agency's formulation and execution of basic policies, decisions, actions, or responsibilities.

(d) *Record status of copies.* The determination as to whether a particular document is a record does not depend upon whether it contains unique information. Multiple copies of the same document and documents containing duplicative information, including messages created or received on electronic mail systems, may each have record status depending on how they are used to transact agency business. See paragraph (f)(2) of this section concerning the nonrecord status of extra copies.

(e) *Electronic mail messages.* Messages created or received on electronic mail systems may meet the definition of record in 44 U.S.C. 3301.

(f) *Nonrecord materials.* Nonrecord materials are Government-owned documentary materials that do not meet the conditions of record status (see § 1222.34(b)) or that are specifically excluded from status as records by statute (see 44 U.S.C. 3301):

(1) Library and museum material (but only if such material is made or acquired and preserved solely for reference or exhibition purposes);

(2) Extra copies of documents (but only if the sole reason such copies are preserved is for convenience of reference); and

(3) Stocks of publications and of processed documents. (Each agency shall create and maintain serial or record sets of its publications and processed documents, as evidence of agency activities and for the information they contain, including annual reports, brochures, pamphlets, books, handbooks, posters and maps.)

(g) *Agency responsibilities.* Agencies shall take appropriate action to ensure that all staff are capable of identifying Federal records. For electronic mail systems, agencies shall ensure that all staff are informed of the potential record status of messages, transmittal and receipt data, directories, and distribution lists.

[55 FR 27423, July 2, 1990, as amended at 60 FR 44640, Aug. 28, 1995]

§ 1222.36 Identifying personal papers.

(a) Personal papers are documentary materials, or any reasonably segregable portion thereof, of a private or nonpublic character that do not relate to, or have an effect upon, the conduct of agency business. Personal papers are excluded from the definition of Federal records and are not owned by the Government. Examples of personal papers include:

(1) Materials accumulated by an official before joining Government service that are not used subsequently in the transaction of Government business;

(2) Materials relating solely to an individual's private affairs, such as outside business pursuits, professional affiliations, or private political associations that do not relate to agency business; and

(3) Diaries, journals, personal correspondence, or other personal notes that are not prepared or used for, or circulated or communicated in the course of, transacting Government business.

(b) Personal papers shall be clearly designated as such and shall at all times be maintained separately from the office's records.

(c) If information about private matters and agency business appears in the same document, the document shall be copied at the time of receipt, with the personal information deleted, and treated as a Federal record.

(d) Materials labeled ''personal,'' ''confidential,'' or ''private,'' or similarly designated, and used in the transaction of public business, are Federal records subject to the provisions of pertinent laws and regulations. The use of a label such as ''personal'' is not sufficient to determine the status of documentary materials in a Federal office.

[55 FR 27423, July 2, 1990; 55 FR 28136, July 9, 1990; 55 FR 31982, Aug. 6, 1990]

§ 1222.38 Categories of documentary materials to be covered by recordkeeping requirements.

Agency recordkeeping requirements shall prescribe the creation and maintenance of records of the transaction of agency business that are sufficient to:

(a) Document the persons, places, things, or matters dealt with by the agency.

(b) Facilitate action by agency officials and their successors in office.

(c) Make possible a proper scrutiny by the Congress or other duly authorized agencies of the Government.

(d) Protect the financial, legal, and other rights of the Government and of persons directly affected by the Government's actions.

(e) Document the formulation and execution of basic policies and decisions and the taking of necessary actions, including all significant decisions and commitments reached orally (person to person, by telecommunications, or in conference).

(f) Document important board, committee, or staff meetings.

§ 1222.40 Removal of records.

Agencies shall develop procedures to ensure that departing officials do not

remove Federal records from agency custody.

§ 1222.42 Removal of nonrecord materials.

(a) Nonrecord materials, including extra copies of agency records kept only for convenience of reference, may be removed from Government agencies only with the approval of the head of the agency or the individual authorized to act for the agency on matters pertaining to agency records.

(b) Agencies shall ensure that when nonrecord material containing classified information is removed from the executive branch, it is protected under conditions equivalent to those required of executive branch agencies. The originating agency or its successor in function retains control over access to such classified information, even after it is properly removed from the agency.

(c) Agencies shall ensure the appropriate protection of nonrecord material containing information which is restricted from release under the Privacy Act or other statutes, when such restricted nonrecord material is removed from Government agencies.

[56 FR 26336, June 7, 1991]

§ 1222.44 Directives documenting agency programs, policies, and procedures.

Agency recordkeeping requirements shall prescribe that the programs, policies, and procedures of the agency shall be adequately documented in appropriate directives. A record copy of each such directive (including those superseded) shall be maintained by the appropriate agency directives management officer(s) as part of the official files.

§ 1222.46 Recordkeeping requirements of other agencies.

When statutes, regulations, directives or authoritative issuances of other agencies prescribe an agency's recordkeeping requirements, the agency so affected shall include these in appropriate directives or other authoritative issuances prescribing its organization, functions, or activities.

§ 1222.48 Data created or received and maintained for the Government by contractors.

(a) Contractors performing Congressionally-mandated program functions are likely to create or receive data necessary to provide adequate and proper documentation of these programs and to manage them effectively. Agencies shall specify the delivery of the Government of all data needed for the adequate and proper documentation of contractor-operated programs in accordance with requirements of the Federal Acquisition Regulation (FAR) and, where applicable, the Defense Federal Acquisition Regulation Supplement (DFARS).

(b) When contracts involve the creation of data for the Government's use, in addition to specifying a final product, agency officials may need to specify the delivery of background data that may have reuse value to the Government. Before specifying the background data that contractors must deliver to the agency, program and contracting officials shall consult with agency records and information managers and historians and, when appropriate, with other Government agencies to ensure that all agency and Government needs are met, especially when the data deliverables support a new agency mission or a new Government program.

(c) Deferred ordering and delivery-of-data clauses and rights-in-data clauses shall be included in contracts whenever necessary to ensure adequate and proper documentation or because the data have reuse value to the Government.

(d) When data deliverables include electronic records, the agency shall require the contractor to deliver sufficient technical documentation to permit the agency or other Government agencies to use the data.

(e) All data created for Government use and delivered to, or falling under the legal control of, the Government are Federal records and shall be managed in accordance with records management legislation as codified at 44 U.S.C. chapters 21, 29, 31, and 33, the Freedom of Information Act (5 U.S.C. 552), and the Privacy Act (5 U.S.C.

552a), and shall be scheduled for disposition in accordance with 36 CFR part 1228.

§ 1222.50 Records maintenance.

(a) Agencies shall prescribe an appropriate records maintenance program so that complete records are filed or otherwise identified and preserved, records can be found when needed, the identification and retention of permanent records are facilitated, and permanent and temporary records are physically segregated or, for electronic records, segregable.

(b) Each Federal agency, in providing for effective controls over the maintenance of records, shall:

(1) Establish and implement standards and procedures for classifying, indexing, and filing records as set forth in GSA and NARA handbooks;

(2) Formally specify official file locations for records in all media and prohibit the maintenance of records at unauthorized locations;

(3) Formally specify which officials are responsible for maintenance and disposition of electronic records and which computer systems are used for recordkeeping;

(4) Standardize reference service procedures to facilitate the finding, charging out, and refiling of paper, audiovisual, and cartographic and architectural records, and to ensure that reference to electronic records minimizes the risk of unauthorized additions, deletions, or alterations;

(5) Make available to all agency employees published standards, guides, and instructions designed for easy reference and revision;

(6) Review its records maintenance program periodically to determine its adequacy; audit a representative sample of its paper, audiovisual, electronic, cartographic, and architectural files for duplication, misclassification, or misfiles;

(7) Maintain microform, audiovisual, and electronic records in accordance with 36 CFR parts 1230, 1232, and 1234, respectively;

(8) Establish and implement procedures for maintaining records and nonrecord materials separately; ensure that record materials generated electronically are clearly identified as records and protected from unauthorized change or deletion for the length of their scheduled retention period; and

(9) Establish and implement procedures for the separate maintenance of any personal papers in accordance with § 1222.36.

[55 FR 27423, July 2, 1990, as amended at 60 FR 44640, Aug. 28, 1995]

PART 1228—DISPOSITION OF FEDERAL RECORDS

Sec.

1228.1 Scope of part.

Subpart A—Records Disposition Programs

1228.10 Authority.
1228.12 Basic elements of disposition programs.

Subpart B—Scheduling Records

1228.20 Authorities.
1228.22 Developing records schedules.
1228.24 Formulation of agency records schedules.
1228.26 Request for records disposition authority.
1228.28 Scheduling pemanent records.
1228.30 Scheduling temporary records.
1228.32 Request to change disposition authority.

Subpart C—General Records Schedules

1228.40 Authority.
1228.42 Applicability.
1228.44 Current schedules.
1228.46 Availability.

Subpart D—Implementing Schedules

1228.50 Application of schedules.
1228.52 Withdrawal of disposal authority.
1228.54 Temporary extension of retention periods.
1228.56 Transfer of permanent records.
1228.58 Destruction of temporary records.
1228.60 Donation of temporary records.

Subpart E—Loan of Permanent and Unscheduled Records

1228.70 Authority.
1228.72 Approval.
1228.74 Agency action.
1228.76 NARA action on request.
1228.78 Retrieval of records.

Subpart F—Emergency Authorization to Destroy Records

1228.90 General provisions.

1228.92 Menaces to human life or health or to property.
1228.94 State of war or threatened war.

Subpart G—Damage to, Alienation, and Unauthorized Destruction of Records

1228.100 Responsibilities.
1228.102 Criminal penalties.
1228.104 Reporting.
1228.106 Exclusions.

Subpart H—Transfer of Records From the Custody of One Executive Agency to Another

1228.120 Authority.
1228.122 Approval.
1228.124 Agency request.
1228.126 Agency concurrences.
1228.128 Records of terminated agencies.
1228.130 Equipment.
1228.132 Costs of transfers.
1228.134 Restrictions on use of records.
1228.136 Exceptions.

Subpart I—Transfer of Records to Federal Records Centers

1228.150 Authority.
1228.152 Procedures for transfers to Federal records centers.
1228.154 Transfers to the National Personnel Records Center (NPRC).
1228.156 Transferring vital records to Federal records centers.
1228.160 Release of equipment.
1228.162 Use of records in Federal records centers.
1228.164 Disposal clearance for records in Federal records centers.

Subpart J—Transfer of Records to the National Archives

1228.180 Authority.
1228.182 Types of records to be transferred.
1228.183 Certification for retention of records in agency custody.
1228.184 Audiovisual records.
1228.186 Cartographic and architectural records.
1228.188 Electronic records.
1228.190 Transfer of records.
1228.192 Restrictions on transferred records.
1228.194 Records subject to the Privacy Act of 1974.
1228.196 Release of equipment.
1228.198 Use of records transferred to the National Archives.
1228.200 Disposal clearances.

Subpart K—Agency Records Centers

1228.220 Authority.
1228.222 Facility standards for agency records centers.
1228.224 Requests for authority to establish or relocate records centers.

AUTHORITY: 44 U.S.C. chs. 21, 29, and 33.

SOURCE: 45 FR 5705, Jan. 24, 1980. Redesignated at 50 FR 15723, Apr. 19, 1985, unless otherwise noted.

EDITORIAL NOTE: See Derivation Table appearing in the Finding Aids section of this volume.

§1228.1 Scope of part.

This part sets policies and establishes standards, procedures, and techniques for the disposition of all Federal records in accordance with 44 U.S.C. chapters 21, 29, 31, and 33. The disposition of documentary materials created or acquired by a Federal agency, regardless of physical form or characteristics, is controlled by this part if any of the following conditions are met:

(a) The materials are created or received in the course of business and contain information related to the organization, functions, policies, decisions, procedures, operations, or other official activities of the agency. Also included is documentation of oral exchanges such as telephone conversations and meetings during which policy was discussed or formulated or other significant activities of the agency were planned, discussed, or transacted.

(b) The creation, retention, or disposition of the materials is mandated by statute or agency or other Federal regulations, directives, policies, or procedures.

(c) The materials are controlled, maintained, preserved, processed, filed, or otherwise handled following established agency procedures for records.

(d) The material contains unique information, such as substantive annotations, including drafts, transmittal sheets, and final documents or other materials circulated or made available to employees other than the creator for official purposes, such as approval, comment, action, recommendation, follow-up, or to keep agency staff informed regarding agency business.

(e) The material was created or received on an electronic mail system and it meets the definition of record. For specific instructions on the disposition of records created or received

on electronic mail systems, see 36 CFR 1234.32.

[55 FR 27428, July 2, 1990, as amended at 60 FR 44640, Aug. 28, 1995]

Subpart A—Records Disposition Programs

§ 1228.10 Authority.

The head of each agency (in accordance with 44 U.S.C. 2904, 3102, and 3301) is required to establish and maintain a records disposition program to ensure efficient, prompt, and orderly reduction in the quantity of records and to provide for the proper maintenance of records designated as permanent by NARA.

[55 FR 27428, July 2, 1990]

§ 1228.12 Basic elements of disposition programs.

The primary steps in managing a records disposition program are given below. Details of each element are contained in the NARA records management handbook, Disposition of Federal Records (NSN 7610–01–055–8704).

(a) Issue a program directive assigning authorities and responsibilities for records disposition activities in the agency and keep that directive up to date.

(b) Develop, implement, and maintain an accurate, current, and comprehensive records schedule.

(c) Train all agency personnel taking part in the agency's records disposition activities.

(d) Publicize the program to make all agency employees aware of their records disposition responsibilities.

(e) Evaluate the results of the program to ensure adequacy, effectiveness, and efficiency.

[55 FR 27428, July 2, 1990]

Subpart B—Scheduling Records

SOURCE: 55 FR 27429, July 2, 1990, unless otherwise noted.

§ 1228.20 Authorities.

(a) The head of each agency shall direct the creation and preservation of records containing accurate and complete documentation of the organization, functions, policies, decisions, procedures, and essential transactions of the agency (44 U.S.C. 3101). The National Archives and Records Administration shall establish standards for the retention of those records having continuing value, and assist Federal agencies in applying the standards to records in their custody (44 U.S.C. 2905).

(b) No Federal records shall be destroyed or otherwise alienated from the Government except in accordance with procedures described in this part 1228 (44 U.S.C. 3314).

§ 1228.22 Developing records schedules.

The primary steps in developing agency records schedules are given below. Details in each step are contained in the NARA records management handbook, Disposition of Federal Records (NSN 7610–01–055–8704). Ultimately, all records of an agency must be scheduled, but they need not all be scheduled at the same time. An agency may schedule the records of one function, program or organizational element at a time.

(a) Determine the functions and activities documented by the records to be scheduled.

(b) Prepare an inventory of the records including a description of their medium, location, volume, inclusive dates, informational content and use.

(c) Evaluate the period of time the agency needs each records series or system by reference to its uses and value to agency operations or legal obligations.

(d) Based on agency need, formulate specific recommended disposition instructions for each records series or each part of an automated information system, including file breaks, retention periods for temporary records, transfer periods for permanent records, and instructions for the retirement of records to Federal records centers, when appropriate. Recommended retention periods take into account the rights of the Government and the rights of those directly affected by agency actions.

(e) Assemble into a draft schedule the descriptions and recommended disposition instructions for logical blocks of records, i.e., entire agency, organizational component, or functional area.

(f) Obtain approval of the records schedules from NARA (and from the General Accounting Office, when so required under title 8 of the GAO ''Policy and Procedures Manual for the Guidance of Federal Agencies'').

§ 1228.24 Formulation of agency records schedules.

(a) *General.* Agency records schedules approved by the Archivist of the United States specify the disposition for agency records. Records of continuing (permanent) value will be scheduled for retention and immediate or eventual transfer to the legal custody of NARA. All other records will be scheduled for destruction or donation after a specific period of time based on administrative, fiscal, and legal values.

(b) *Characteristics of schedules.* Though records disposition authority may be requested from NARA on a program-by-program, function-by-function, or office-by-office basis, all agency records must be scheduled. Schedules must follow the guidelines provided below:

(1) Schedules shall identify and describe clearly each series or system and shall contain disposition instructions that can be readily applied. (Additional information is required for permanent records as specified in § 1228.28(b).) Schedules must be prepared so that each office will have standing instructions detailing the disposal, transfer, or retention of records.

(2) SF 115s shall include only new records not covered by the General Records Schedules (GRS) (see subpart C), deviations from the GRS (see § 1228.42), or previously scheduled records requiring changes in retention periods or substantive changes in description.

(3) All schedules shall take into account the physical organization of records or the filing system so that disposal or transfer can be handled in blocks.

(4) The disposition of nonrecord materials is controlled by instructions in the agency's printed or published records disposition manual. These instructions do not require NARA approval. Such items shall not be included on SF 115s. Non-record materials, such as extra copies of documents preserved solely for reference, and stocks of processed documents, and personal materials shall be maintained separately from official agency files to aid in records disposition.

(c) *Provisions of schedules.* Records schedules shall provide for:

(1) The destruction of records that have served their statutory, fiscal, or administrative uses and no longer have sufficient value to justify further retention. Procedures for obtaining disposal authorizations are prescribed in § 1228.30;

(2) The removal to a Federal records center (or to an agency records center approved under subpart K) of records not eligible for immediate destruction or other disposition but which are no longer needed in office space. These records are maintained by the records center until they are eligible for further disposition action;

(3) The retention of the minimum volume of current records in office space consistent with effective and efficient operations; and

(4) The identification of records of permanent value in accordance with § 1228.28, and the establishment of cutoff periods and dates when such records will be transferred to the legal custody of NARA.

§ 1228.26 Request for records disposition authority.

(a) *Submission.* Requests for records disposition authority shall be initiated by Federal agencies by submitting Standard Form 115, Request for Records Disposition Authority, to NARA (NIR). An SF 115 is used for requesting authority to schedule (or establish the disposition for) permanent and temporary records, either on a recurring or one-time basis.

(1) New Federal agencies shall apply General Records Schedules to eligible records and shall submit to NARA SF 115s covering all remaining records within 2 years of their establishment.

(2) Agencies shall submit to NARA schedules for the records of new programs and of programs that are reorganized or otherwise changed in a way that results in the creation of new or different records within 1 year of the implementation of the change.

(b) *Certification.* The signature of the authorized agency representative on the SF 115 shall constitute certification that the records recommended for disposal do not or will not have sufficient administrative, legal, or fiscal value to the agency to warrant retention beyond the expiration of the specified period and that records described as having permanent value will be transferred to the National Archives upon expiration of the stated period.

(c) *Disapproval of requests for disposition authority.* Requests for records disposition authority may be returned to the agency if the SF 115 is improperly prepared. The agency shall make the necessary corrections and resubmit the form to NARA (NIR). NARA may disapprove the disposition request for an item if, after appraisal of the records, NARA determines that the proposed disposition is not consistent with the value of the records. In such cases, NARA will notify the agency in writing.

[55 FR 27429, July 2, 1990; 55 FR 28136, July 9, 1990]

§ 1228.28 Scheduling permanent records.

(a) *Initiation.* Federal agencies propose permanent retention of records in accordance with guidelines contained in the NARA records management handbook, Disposition of Federal Records (NSN 7610–01–055–8704).

(b) *Requirements.* Each item proposed for permanent retention on an SF 115 shall include the following:

(1) Records series title used by agency personnel to identify the records;

(2) Complete description of the records including physical type and information contents;

(3) Inclusive dates;

(4) An arrangement statement;

(5) Statement of restrictions on access which NARA should impose in conformity with the Freedom of Information Act if the records are proposed for immediate transfer;

(6) An estimate of the volume of records accumulated annually if the records are current and continuing;

(7) The total volume to date; and

(8) Disposition instructions, developed using the following guidelines:

(i) If the records series or system is current and continuing, the SF 115 will include a disposition instruction specifying the period of time after which the records will be transferred to the National Archives, normally within 30 years for paper records, 5–10 years for audiovisual or microform records, and as soon as the records become inactive or the agency cannot meet the maintenance requirements found in § 1228.188 of this part for electronic records.

(ii) If the records series or system is nonrecurring, i.e., no additional records will be created or acquired, the agency may propose either immediate or future transfer to the National Archives.

(c) *Determination.* NARA will determine whether or not records are of permanent value and when the transfer of the permanent records will take place.

(1) If NARA determines that records are not permanent, it will notify the agency and negotiate an appropriate disposition. The disposition instruction on the SF 115 will be modified prior to NARA approval.

(2) If NARA determines that records are permanent, but that the transfer instructions are not appropriate, it will negotiate appropriate transfer terms with the agency. The disposition instruction on the SF 115 will be modified prior to NARA approval.

[55 FR 27429, July 2, 1990; 55 FR 31982, Aug. 6, 1990]

§ 1228.30 Scheduling temporary records.

(a) *Initiation.* Federal agencies request authority to dispose of records, either immediately or on a recurring basis. Requests for immediate disposal are limited to records already in existence which no longer accumulate. For recurring records, approved schedules provide continuing authority to destroy the records. The retention periods approved by NARA are mandatory, and the agency shall dispose of the records after expiration of the retention period, except as provided in § 1228.54.

(b) *Requirements.* Each item on an SF 115 proposed for eventual destruction shall include the following:

(1) Records series title used by agency personnel to identify the records;

(2) Description of the records including physical type and informational content;

(3) If the records are contained in a Privacy Act system of records, a citation to the agency's alpha-numeric or numeric code designation for the system of records. If the system of records was added or deleted since the publication of the current Office of the Federal Register compilation of Privacy Act Issuances, the agency shall also cite the date and page of the FEDERAL REGISTER on which the new system notice appears or the deleted system is announced.

(4) Disposition instructions, developed using the following guidelines:

(i) If the records series or system is current and continuing, the SF 115 will include a disposition instruction specifying the period of time after which the records will be destroyed.

(ii) If the records series or system is nonrecurring, i.e., no additional records will be created or acquired, the agency may propose either immediate destruction or destruction on a future date.

(c) *Determination.* NARA may determine that records proposed as temporary merit permanent retention and transfer to the National Archives. In such cases, NARA arranges with the agency to change the disposition instruction prior to approval of the SF 115.

(d) *General Accounting Office concurrence.* Each Federal agency shall obtain the approval of the Comptroller General for the disposal of program records less than 3 years old and for certain classes of records relating to claims and demands by or against the Government, and to accounts in which the Government is concerned in accordance with the GAO ''Policy and Procedures Manual for Guidance of Federal Agencies,'' title 8—Records Management (44 U.S.C. 3309). This approval must be obtained before the approval of the disposal request by NARA, but the request may be submitted concurrently to GAO and NARA.

(e) *Withdrawn items.* Agencies may request that items listed on the SF 115 be withdrawn in order to aid in NARA's processing (appraisal) of the remaining items on the schedule.

(1) If, during the course of the appraisal process, NARA determines that records described by an item(s) on the proposed schedule do not exist or are not arranged as stated on the SF 115, NARA may request the agency to withdraw the item(s) from consideration, if the agency is unable to offer sufficient clarification.

(2) If NARA and the agency cannot agree on the retention period for an item(s), the items(s) may be withdrawn. In these cases, the agency will submit an SF 115 with a revised proposal for disposition within 6 months of the date of the approval of the original SF 115.

[55 FR 27429, July 2, 1990, as amended at 57 FR 22432, May 28, 1992]

§ 1228.32 Request to change disposition authority.

(a) Agencies desiring to change the approved retention period of a series or system of records shall submit an SF 115. Disposition authorities contained in an approved SF 115 are automatically superseded by approval of a later SF 115 applicable to the same records unless the later SF 115 specified an effective date. Agencies submitting revised schedules shall indicate on the SF 115 the relevant schedule and item numbers to be superseded, the citation to the current printed records disposition schedule, if any, and/or the General Records Schedules and item numbers that cover the records.

(b) Agencies proposing to change the retention period of a series or system of records shall submit with the SF 115 an explanation and justification for the change. The need to retain records longer than the retention period specified in the disposition instructions on an approved SF 115 for purposes of audit, court order, investigation, litigation, study, or any other administrative purpose that justifies the temporary extension of the retention period shall be governed by the procedures set forth in § 1228.54. Agencies shall not submit an SF 115 to change the retention period in such cases.

[61 FR 19554, May 2, 1996; 61 FR 24702, May 16, 1996]

Subpart C—General Records Schedules

SOURCE: 55 FR 27430, July 2, 1990, unless otherwise noted.

§ 1228.40 Authority.

The Archivist of the United States shall issue schedules authorizing disposal, after specified periods of time, of records common to several or all agencies after determining that the records lack value for continued retention by the U.S. Government. General Records Schedules constitute authority to destroy records described therein after expiration of the stated retention period. Application of the disposition instructions in these schedules is mandatory (44 U.S.C. 3303a).

§ 1228.42 Applicability.

(a) New items or changes in the disposition of GRS records supersede approved agency schedules for the same series or system of records, unless the agency schedule provides for a shorter retention period, or unless NARA indicates that the GRS standard must be applied without exception. Agencies shall not request authority to apply GRS authorizations (see § 1228.24(b)(2)).

(b) Agencies may request exceptions to disposition instructions in the GRS by submitting an SF 115 in accordance with § 1228.30 accompanied by a written justification explaining why the agency needs the records for a different period of time from other agencies.

(c) Provisions of the General Records Schedules may be applied to records in the custody of the National Archives at NARA's discretion subject to the provisions of § 1228.200.

§ 1228.44 Current schedules.

The following General Records Schedules governing the disposition of records common to several or all agencies were developed by the National Archives and Records Administration after consultation with other appropriate agencies. They have been approved by the Archivist of the United States.

SCHEDULE NUMBER AND TYPE OF RECORDS GOVERNED

1. Civilian Personnel Records.
2. Payrolling and Pay Administration Records.
3. Procurement, Supply and Grant Records.
4. Property Disposal Records.
5. Budget Preparation, Presentation, and Apportionment Records.
6. Accountable Officers' Accounts Records.
7. Expenditure Accounting Records.
8. Stores, Plant, and Cost Accounting Records.
9. Travel and Transportation Records.
10. Motor Vehicle Maintenance and Operation Records.
11. Space and Maintenance Records.
12. Communications Records.
13. Printing, Binding, Duplication, and Distribution Records.
14. Information Services Records.
15. Housing Records.
16. Administrative Management Records.
17. Cartographic, Aerial Photographic, Architectural, and Engineering Records.
18. Security and Protective Services Records.
19. Research and Development Records: RESCINDED.
20. Electronic Records.
21. Audiovisual Records.
22. Inspector General Records.
23. Records Common to Most Offices Within Agencies.

§ 1228.46 Availability.

The GRS and instructions for their use are available from NARA (NI). The Archivist of the United States distributes new schedules and schedule revisions under sequentially numbered GRS transmittals.

Subpart D—Implementing Schedules

SOURCE: 55 FR 27431, July 2, 1990, unless otherwise noted.

§ 1228.50 Application of schedules.

The application of approved schedules is mandatory (44 U.S.C. 3303a). The Archivist of the United States will determine whether or not records may be destroyed or transferred to the National Archives. If the Archivist approves the request for disposition authority, NARA will notify the agency by returning one copy of the completed SF 115. This shall constitute mandatory authority for the final disposition of the records (for withdrawal of disposal authority or the extension of retention periods, see §§ 1228.52 and 1228.54). The authorized destruction shall be accomplished as prescribed in

§ 1228.58. The head of each Federal agency shall direct the application of records schedules to ensure the agency maintains recorded information necessary to conduct Government business, avoid waste, and preserve permanent records for transfer to the National Archives. The agency head shall take the following steps to ensure proper dissemination and application of approved schedules:

(a) Issue an agency directive incorporating the disposition authorities approved by NARA, i.e., SF 115s (except for one-time authorities covering nonrecurring records) and the General Records Schedules. Also include nonrecord materials with disposition instructions developed by the agency. Once all records and nonrecord materials are included, this document is the agency's comprehensive schedule. Agencies may also issue other directives containing instructions relating to agency records disposition procedures.

(1) Published schedules do not include nonrecurring records for which NARA has granted authority for immediate disposal or transfer to the National Archives. They do include general instructions for retirement of records to the Federal records centers, transfer of records to the National Archives, and other records disposition procedures.

(2) Comprehensive schedules are formally published manuals or directives that provide for the disposition of all recurring records and nonrecord materials created by an agency. These schedules must cite the GRS or SF 115 and item numbers that provide the legal disposition authority for items covering record material.

(3) Prior to issuance, agencies may consult with NARA concerning directives or other issuances containing approved schedules, instructions for use of the Federal records centers, transfer of records to the National Archives, or other matters covered by NARA procedures or regulations.

(4) Agencies shall forward to the National Archives and Records Administration (NIR) three copies of each final directive or other issuance relating to records disposition and 20 copies of all published records schedules (printed agency manuals) and changes.

(b) Establish internal training programs to acquaint appropriate personnel with the requirements and procedures of the records disposition program.

(c) Apply the approved records disposition schedules to the agency's records.

(1) Records described by items marked ''disposition not approved'' or ''withdrawn'' may not be destroyed until a specific disposition has been approved by NARA.

(2) Disposition authorities for items on approved SF 115s that specify an organizational component of the department or independent agency as the creator or custodian of the records may be applied to the same records after internal reorganization, but only if the nature, content, and functional importance of the records remain the same. Authority approved for items described in a functional format may be applied to any organizational component within the department or independent agency that is responsible for the relevant function.

(3) Disposition authorities approved for one department or independent agency may not be applied by another. Departments or agencies that acquire records from another department or agency, and/or continue creating the same series of records previously created by another department or agency through interagency reorganization must submit an SF 115 to NARA for disposition authorization for the records within one year of the reorganization.

(4) Unless otherwise specified, disposition authorities apply retroactively to all existing records as described in the schedule, including records acquired by transfer of function within or between agencies, as long as the nature, content, and functional importance of the records series is unchanged.

(d) Review approved schedules, and, if necessary, update them annually. Additions and changes to the GRS shall be incorporated or otherwise disseminated within 6 months of issuance from NARA.

§ 1228.52 Withdrawal of disposal authority.

In an emergency or in the interest of efficiency of Government operations, NARA will withdraw disposal authorizations in approved disposal schedules (44 U.S.C. 2909). This withdrawal may apply to particular items on schedules submitted by agencies or may apply to all existing authorizations for the disposal of a specified type of record obtained by any or all agencies of the Government. If the withdrawal is applicable to only one agency, that agency will be notified of this action by letter signed by the Archivist; if applicable to more than one agency, notification may be by NARA bulletin issued and signed by the Archivist.

§ 1228.54 Temporary extension of retention periods.

(a) Approved agency records schedules and the General Records Schedules are mandatory (44 U.S.C. 3303a). Except as specified in § 1228.32(b), records series or systems approved for destruction shall not be maintained longer without the prior written approval of the National Archives and Records Administration (NIR). However, extended retention of an individual shipment of records to a Federal Records Center for a period up to 6 months is governed by procedures in § 1228.164(c).

(b) Upon submission of adequate justification, NARA may authorize a Federal agency to extend the retention period of a series or system of records (44 U.S.C. 2909). These extensions of retention periods will be granted for records which are required to conduct Government operations because of special circumstances which alter the normal administrative, legal, or fiscal value of the records.

(c) The head of a Federal agency may request approval of a temporary extension of a retention period by sending a letter to NARA (NIR), Washington DC 20408. The request shall include:

(1) A concise description of the records series for which the extension is requested.

(2) A complete citation of the specific provisions of the agency records schedule or the General Records Schedule currently governing disposition of the records;

(3) A statement of the estimated period of time that the records will be required; and

(4) A statement of the current and proposed physical location of the records including information on whether the records have been or will be transferred to one or more Federal records centers.

(d) Approval of a request for extension of retention periods may apply to records in the custody of one Federal agency or records common to several or all Federal agencies. If approval of a request is applicable to records in the custody of one agency, that agency will be notified by letter. If approval is applicable to records common to several agencies, notification may be made by NARA bulletin.

(e) Upon approval of a request for a change in retention periods applicable to records that have been or will be transferred to one or more Federal records centers, centers will be notified of the change and agencies will be furnished a copy of the notification. Agencies shall forward to the National Archives and Records Administration (NIR) 20 copies of all formally issued instructions which extend retention periods.

(f) Upon expiration of an approved extension of retention period, NARA will notify all affected agencies to apply normal retention requirements.

(g) Except when NARA agrees to continue to store and service records on a reimbursable basis or waives the requirements of this paragraph under a condition specified in paragraph (h) of this section, agencies shall remove from Federal records centers at the agency's expense records that, because of audit, court order, investigation, litigation, study, or any other administrative reason, the agency wishes to retain longer than the scheduled retention period for the records. The removal of records must be accomplished within 90 days of the date of the notification from the Federal records center that the retention period has expired. Agencies that wish to establish an agreement or inquire about their records should write to NARA, Office of Federal Records Centers (NC), 8601 Adelphi Road, College Park, MD 20740–6001.

(h) NARA will waive the requirements specified in paragraph (g) of this section when:

(1) The temporary extension of retention period has been imposed by NARA, for instance when NARA plans to reappraise the archival value of records or when NARA is working on a new or revised General Records Schedule item;

(2) The agency has submitted an SF 115, Request for Disposition Authority, to NARA to request a change in the scheduled disposition of a series of records;

(3) NARA and the agency mutually agree that a temporary extension is required to meet exceptional records management situations such as a NARA-agency screening project to separate permanent from disposable records or application of a new records disposition schedule to previously unscheduled records; or

(4) The administrative cost to NARA to implement a reimbursable agreement would exceed the reimbursement received.

[55 FR 27431, July 2, 1990, as amended at 61 FR 19554, May 2, 1996; 61 FR 24702, May 16, 1996]

§ 1228.56 Transfer of permanent records.

All records scheduled as permanent shall be transferred to the National Archives after the period specified on the SF 115 in accordance with procedures specified under subpart J.

§ 1228.58 Destruction of temporary records.

(a) *Authority.* Federal agencies are required to follow regulations issued by the Archivist of the United States governing the methods of destroying records (44 U.S.C. 3302). Only the methods described in this section shall be used.

(b) *Sale or salvage.* Paper records to be disposed of normally must be sold as wastepaper. If the records are restricted because they are national security classified or exempted from disclosure by statute, including the Privacy Act, or regulation, the wastepaper contractor must be required to pulp, macerate, shred, or otherwise definitively destroy the information contained in the records, and their destruction must be witnessed either by a Federal employee or, if authorized by the agency that created the records, by a contractor employee. The contract for sale must prohibit the resale of all other paper records for use as records or documents. Records other than paper records (audio, visual, and data tapes, disks, and diskettes) may be salvaged and sold in the same manner and under the same conditions as paper records. All sales must be in accordance with the established procedures for the sale of surplus personal property. (See 41 CFR part 101–45, Sale, Abandonment, or Destruction of Personal Property.)

(c) *Destruction.* If the records cannot be sold advantageously or otherwise salvaged, the records may be destroyed by burning, pulping, shredding, macerating, or other suitable means.

§ 1228.60 Donation of temporary records.

(a) When the public interest will be served, a Federal agency may propose the transfer of records eligible for disposal to an appropriate person, organization, institution, corporation, or government (including a foreign government) that has requested them. Records will not be transferred without prior written approval of NARA.

(b) The head of a Federal agency shall request the approval of such a transfer by sending a letter to NARA (NIR), Washington, DC 20408. The request shall include:

(1) The name of the department or agency, and subdivisions thereof, having custody of the records;

(2) The name and address of the proposed recipient of the records;

(3) A list containing:

(i) An identification by series or system of the records to be transferred,

(ii) The inclusive dates of the records,

(iii) The NARA disposition of job (SF 115) or GRS and item numbers that authorize disposal of the records;

(4) A statement providing evidence:

(i) That the proposed transfer is in the best interests of the Government,

(ii) That the proposed recipient agrees not to sell the records as records or documents, and

(iii) That the transfer will be made without cost to the U.S. Government;

(5) A certification that:

(i) The records contain no information the disclosure of which is prohibited by law or contrary to the public interest, and/or

(ii) That records proposed for transfer to a person or commercial business are directly pertinent to the custody or operations of properties acquired from the Government, and/or

(iii) That a foreign government desiring the records has an official interest in them.

(c) NARA will consider such request and determine whether the donation is in the public interest. Upon approval NARA will notify the requesting agency in writing. If NARA determines such a proposed donation is contrary to the public interest, the request will be denied and the agency will be notified that the records must be destroyed in accordance with the appropriate disposal authority.

Subpart E—Loan of Permanent and Unscheduled Records

SOURCE: 55 FR 27433, July 2, 1990, unless otherwise noted.

§ 1228.70 Authority.

The Archivist of the United States has authority over the placement of permanent records (44 U.S.C. 2107 and 2904). As unscheduled records have not been appraised, they will be deemed permanent for the purposes of this section and are also covered by this authority.

§ 1228.72 Approval.

No permanent or unscheduled records shall be loaned to non-Federal recipients without prior written approval from NARA. This authorization is not required for temporary loan of permanent and unscheduled records between Federal agencies.

§ 1228.74 Agency action.

(a) An agency proposing to loan permanent or unscheduled records shall execute a written loan agreement with the proposed recipient. The agreement shall include:

(1) The name of the department or agency and subdivisions thereof having custody of the records;

(2) The name and address of the proposed recipient of the records;

(3) A list containing:

(i) An identification by series or system of the records to be loaned,

(ii) The inclusive dates for each series,

(iii) The volume and media of the records to be loaned, and

(iv) The NARA disposition job (SF 115) and item numbers covering the records, if any;

(4) A statement of the purpose and duration of the loan;

(5) A statement specifying any restrictions on the use of the records and how these restrictions will be administered by the donee; and

(6) A certification that the records will be stored according to the environmental specifications for archival records.

(b) The Archivist of the United States shall be a signatory on all loan agreements for permanent and unscheduled records. An agreement may not be implemented until the Archivist has signed.

(c) The head of the Federal agency shall request approval for the loan by sending a letter to NARA (NIR), Washington, DC 20408, transmitting the proposed loan agreement and specifying the name, title, and telephone number of the person NARA should contact about the proposed loan.

[57 FR 22432, May 28, 1992]

§ 1228.76 NARA action on request.

NARA will review the request and, if found acceptable, return the approved agreement to the agency. NARA will deny the request if the records should be transferred to the National Archives in accordance with subpart J of this part or if the loan would endanger the records or otherwise contravene the regulations in 36 CFR chapter XII, subchapter B. If NARA disapproves the loan, the Archivist will notify the agency in writing and provide instructions for the disposition of the records.

[57 FR 22432, May 28, 1992; 57 FR 24308, June 8, 1992]

§ 1228.78 Retrieval of records.

An agency shall contact the recipient of the loan of permanent or unscheduled records 30 days prior to the expiration of the loan period (as stated in the loan agreement) to arrange for the return of the records. If the agency extends the duration of the loan, it shall notify NARA (NIR) in writing, specifying the reason for the extension and providing a new time limit for the loan.

[57 FR 22432, May 28, 1992]

Subpart F—Emergency Authorization to Destroy Records

§ 1228.90 General provisions.

Under certain conditions, records may be destroyed without regard to the provisions of subpart D.

[45 FR 5705, Jan. 24, 1980. Redesignated at 50 FR 15723, Apr. 19, 1985, and 55 FR 27433, July 2, 1990]

§ 1228.92 Menaces to human life or health or to property.

(a) Agencies may destroy records that constitute a continuing menace to human health or life or to property (44 U.S.C. 3310). When such records are identified, the agency head shall notify NARA (NIR), specifying the nature of the records, their location and quantity, and the nature of the menace. If NARA concurs in the determination, the Archivist will direct the immediate destruction of the records or other appropriate means of destroying the recorded information. However, if the records are still or motion picture film on nitrocellulose base that has deteriorated to the extent described in paragraph (b) of this section, the head of the agency may follow the procedure therein provided.

(b) Whenever any radarscope, aerial, or other still or motion picture film on nitrocellulose base has deteriorated to the extent that it is soft and sticky, is emitting a noxious order, contains gas bubbles, or has retrograded into acrid powder, and the head of the agency having custody of it shall determine that it constitutes a menace to human health or life or to property, then the agency shall without prior authorization of the Archivist:

(1) Arrange for its destruction in a manner that will salvage its silver content if the silver content is of sufficient quantity and market value per troy ounce to warrant such salvage;

(2) Authorize burial in approved landfills, in the event the quantity is not sufficiently large to justify the salvaging of its silver content; or

(3) Effect other appropriate methods in the event that the methods provided in paragraph (b)(1) or (2) of this section are not feasible.

(c) These films should be removed from inhabited buildings as soon as possible.

(d) Within 30 days after the destruction of the film as provided in this section, the head of the agency who directed its destruction shall submit a written statement to NARA (NIR), Washington, DC 20408, describing the film and showing when, where, and how the destruction was accomplished.

(e) This report has been cleared in accordance with 41 CFR part 201–45 and assigned Interagency Report Control Number 1095–NAR–AR.

[45 FR 5705, Jan. 24, 1980. Redesignated and amended at 50 FR 15723, 15725, Apr. 19, 1985; 51 FR 23538, June 30, 1986. Redesignated and amended at 55 FR 27433, July 2, 1990]

§ 1228.94 State of war or threatened war.

(a) Destruction of records outside the territorial limits of the continental United States is authorized whenever, during a state of war between the United States and any other nation or when hostile action by a foreign power appears imminent, the head of the agency that has custody of the records determines that their retention would be prejudicial to the interest of the United States, or that they occupy space urgently needed for military purposes and are without sufficient administrative, legal, research, or other value to warrant their continued preservation (44 U.S.C. 3311).

(b) Within 6 months after the destruction of any records under this authorization, a written statement describing the character of the records

and showing when and where the disposal was accomplished shall be submitted to NARA (NIR) by the agency official who directed the disposal.

[55 FR 27433, July 2, 1990]

Subpart G—Damage to, Alienation, and Unauthorized Destruction of Records

§ 1228.100 Responsibilities.

(a) The Archivist of the United States and the heads of Federal agencies are responsible for preventing the alienation or unauthorized destruction of records, including all forms of mutilation. Records may not be removed from Federal custody or destroyed without regard to the provisions of agency records schedules (SF 115) approved by NARA or the General Records Schedules issued by NARA (44 U.S.C. 2905, 3106, and 3303a).

(b) The heads of Federal agencies are responsible for ensuring that all employees are aware of the provisions of the law relating to unauthorized destruction, alienation, or mutilation of records, and should direct that any such action be reported to them.

[55 FR 27433, July 2, 1990]

§ 1228.102 Criminal penalties.

The maximum penalty for the willful and unlawful destruction, damage, or alienation of Federal records is a $2,000 fine, 3 years in prison, or both (18 U.S.C. 2071).

[55 FR 27434, July 2, 1990]

§ 1228.104 Reporting.

(a) The head of a Federal agency shall report any unlawful or accidental destruction, defacing, alteration, or removal of records in the custody of that agency to NARA (NIR) Washington, DC 20408. The report shall include:

(1) A complete description of the records with volume and dates if known;

(2) The office of origin;

(3) A statement of the exact circumstances surrounding the alienation, defacing, or destruction of the records;

(4) A statement of the safeguards established to prevent further loss of documentation; and

(5) When appropriate, details of the actions taken to salvage, retrieve, or reconstruct the records.

(b) This report has been cleared in accordance with 41 CFR part 201–45 and assigned Interagency Report Control Number 0285–NAR–AR.

(c) The Archivist of the United States will assist the head of the agency in contacting the Attorney General for the recovery of any unlawfully removed records.

[45 FR 5705, Jan. 24, 1980, as amended at 46 FR 60205, Dec. 9, 1981. Redesignated and amended at 50 FR 15723, 15725, Apr. 19, 1985; 51 FR 23538, June 30, 1986. Redesignated and amended at 55 FR 27434, July 2, 1990]

§ 1228.106 Exclusions.

Private or personal files are not governed by these provisions. 36 CFR 1222.20(d) provides the legal definition of personal papers and prescribes standards for their maintenance.

[45 FR 5705, Jan. 24, 1980. Redesignated and amended at 50 FR 15723, 15725, Apr. 19, 1985. Further redesignated at 55 FR 27433, July 2, 1990]

Subpart H—Transfer of Records from the Custody of One Executive Agency to Another

SOURCE: 45 FR 5705, Jan. 24, 1980, unless otherwise noted. Redesignated at 50 FR 15723, Apr. 19, 1985, and 55 FR 27433, July 2, 1990.

§ 1228.120 Authority.

The Archivist of the United States will issue regulations governing the transfer of records from the custody of one executive agency to another (44 U.S.C. 2908).

§ 1228.122 Approval.

No records shall be transferred from the custody of one executive agency to another without the prior written approval of the National Archives and Records Administration except as provided in § 1228.136.

§ 1228.124 Agency request.

The head of any executive agency may request the transfer of records to or from his or her agency. Approval

shall be requested by letter addressed to the National Archives (NIR), in which are included:

(a) A concise description of the records to be transferred, including the volume in cubic feet;

(b) A statement of the restrictions imposed on the use of records;

(c) A statement of the agencies and persons using the records and the purpose of this use;

(d) A statement of the current and proposed physical and organizational locations of the records; and

(e) A justification for the transfer including an explanation of why it is in the best interests of the Government.

[45 FR 5705, Jan. 24, 1980. Redesignated at 50 FR 15723, Apr. 19, 1985, and amended at 50 FR 26934, June 28, 1985. Redesignated and amended at 55 FR 27434, July 2, 1990]

§1228.126 Agency concurrences.

Copies of the concurrence or nonconcurrence in the transfer by the heads of any agencies concerned shall be attached to the agency request.

§1228.128 Records of terminated agencies.

Transfers of records of executive agencies whose functions are terminated or are in process of liquidation are expressly subject to this part 1228 and no such transfers shall be made except in accordance with its provisions.

§1228.130 Equipment.

Records storage equipment shall be transferred with the records contained therein in accordance with arrangements previously agreed to by the agencies concerned.

§1228.132 Costs of transfers.

Approved transfers shall be made without reimbursement to the agency of original custody for any cost involved, except when this reimbursement is previously agreed to by the agencies concerned.

§1228.134 Restrictions on use of records.

Whenever any records that are transferred are subject to restrictions upon their use imposed under a statute, Executive order, or agency determination, these restrictions shall continue in effect after the transfer. Restrictions imposed by agency determination may be removed by agreement between the agencies concerned.

§1228.136 Exceptions.

Prior written approval of NARA is not required when:

(a) Records are transferred to Federal records centers or the National Archives in accordance with subparts I and J.

(b) Records are loaned for official use.

(c) The transfer of records or functions or both is required by statute, Executive Order, Presidential reorganization plan, or Treaty, or by specific determinations made thereunder.

(d) The records are transferred between two components of the same Executive department.

(e) Records accessioned by the National Archives, later found to lack sufficient value for continued retention by the National Archives are governed exclusively for further disposition in accordance with §1228.200.

[55 FR 27434, July 2, 1990]

Subpart I—Transfer of Records to Federal Records Centers

§1228.150 Authority.

The Archivist of the United States is authorized to establish, maintain, and operate records centers for the storage, processing, and servicing of records for Federal agencies (44 U.S.C. 2907). These centers are known as Federal records centers. In addition, a National Personnel Records Center is maintained for designated records of the Department of Defense and the Office of Personnel Management and for other designated records pertaining to former Federal civilian employees. A list of these records centers follows:

Area served	Federal records center
District of Columbia, Maryland, West Virginia, and Virginia (except U.S. Court records).	Washington National Records Center, 4205 Suitland Rd., Washington, DC 20409–0002.
Designated records of the Military Departments and the U.S. Coast Guard.	National Personnel Records Center (Military Personnel Records), 9700 Page Ave., St. Louis, MO 63132–5100.
The entire Federal Government personnel records of separated Federal employees; medical and pay records of all Federal employees; designated medical records of Army and Air Force military personnel and their dependents; and records of agencies in the St. Louis area (Missouri only), of Scott AFB, IL, and of the Memphis Service Center, Internal Revenue Service.	National Personnel Records Center (Civilian Personnel Records), 111 Winnebago St., St. Louis, MO 63118–4199.
National collection of long term records	Federal Records Center, 100 Dan Fox Dr., Pittsfield, MA 01201–8230.
Maine, Vermont, New Hampshire, Massachusetts, Connecticut, and Rhode Island.	Federal Records Center, 380 Trapelo Rd., Waltham, MA 02154–6399.
New York, New Jersey, Puerto Rico, and the Virgin Islands	Federal Records Center, Military Ocean Terminal, Bldg. 22, Bayonne, NJ 07002–5388.
Delaware, Pennsylvania, and U.S. court records for Maryland, Virginia, and West Virginia.	Federal Records Center, 14700 Townsend Rd., Philadelphia, PA 19154–1025.
North Carolina, South Carolina, Tennessee, Mississippi, Alabama, Georgia, Florida, and Kentucky.	Federal Records Center, 1557 St. Joseph Ave., East Point, GA 30344–2593.
Illinois, Wisconsin, Minnesota, and U.S. court records for Indiana, Michigan, and Ohio.	Federal Records Center, 7358 S. Pulaski Rd., Chicago, IL 60629–5898.
Indiana, Michigan, and Ohio except for U.S. court records	Federal Records Center, 3150 Springboro Drive, Dayton, OH 45439–1883.
Kansas, Iowa, Nebraska, and Missouri except greater St. Louis area.	Federal Records Center, 2312 E. Bannister Rd., Kansas City, MO 64131–3060.
Texas, Oklahoma, Arkansas, Louisiana, and New Mexico	Federal Records Center, P.O. Box 6216, Fort Worth, TX 76115–0216.
Colorado, Wyoming, Utah, Montana, North Dakota, and South Dakota.	Federal Records Center, Denver Federal Center Bldg. 48, P.O. Box 25307, Denver, CO 80225–0307.
Nevada except Clark County, California except southern California, American Samoa.	Federal Records Center, 1000 Commodore Dr., San Bruno, CA 94066–2350.
Arizona; Clark County, Nevada, and southern California (counties of San Luis Obispo, Kern, San Bernadino, Santa Barbara, Ventura, Orange, Los Angeles, Riverside, Inyo, Imperial, and San Diego).	Federal Records Center, 24000 Avila Rd., P.O. Box 6719, Laguna Niguel, CA 92607–6719.
Washington, Oregon, Idaho, Alaska, Hawaii, and Pacific Ocean area (except American Samoa).	Federal Records Center, 6125 Sand Point Way NE., Seattle, WA 98115–7999.

[45 FR 5705, Jan. 24, 1980. Redesignated and amended at 50 FR 15723, 15725, Apr. 19, 1985. Redesignated at 55 FR 27433, July 2, 1990; 57 FR 21742, May 22, 1992; 61 FR 19554, May 2, 1996]

§ 1228.152 Procedures for transfers to Federal records centers.

This section prescribes general procedures for the transfer of records to Federal records centers. For greater detail consult the NARA Records Management Handbook, Federal Archives and Records Centers (NSN 7610–00–298–6904).

(a) Federal records centers will accept for transfer any records of Federal agencies, subject to the following conditions:

(1) The records are properly scheduled. If the records are not scheduled, or if the records are scheduled for final disposition after the occurrence of an event at some unspecified future time (contingent), an exception to this regulation must be obtained by submitting a request, in writing, to the National Archives (NC), Washington, DC 20408.

(i) Requests for exceptions for unscheduled records will be considered only if an SF 115 has been submitted and accepted in accordance with the provisions of subpart C. The request must include information on the volume of the records and the anticipated reference activity.

(ii) Requests for exceptions for contingent records must include the series title, records disposition schedule and item numbers, approximate volume accumulated annually, periodic review interval for disposal and justification for retirement to a Federal records center.

(2) The records are not authorized for immediate disposal and transportation costs are not in excess of the resulting savings.

(3) Facilities for storing and providing reference on the records are available.

(b) Priority will be given to the removal of records from office space, from space convertible to office use, from leased space, and from filing equipment that can be reused.

(c) Inquiries concerning the appropriateness of transfers may be sent to the Director of the Federal records center serving the area in which the records are located. Inquiries shall specify the nature and quantity of the records proposed for transfer.

(d) Tranfers of records on an agency-wide basis may be initiated by submitting a request to National Archives (NC), Washington, DC 20408. Requests shall specify the nature and quantity of the records proposed for transfer.

(e) Transfers to Federal records centers shall be preceded by the submission of Standard Form 135, Records Transmittal and Receipt.

(1) A separate accession number is required for each series of records listed on the Standard Form 135. An accession consists of records in one series that have the same disposition authority and disposition date.

(2) Standard Forms 135 proposing the transfer of the following categories of records must contain, either in block 6F of the form or on attached plain paper, a folder title list of the box contents or equivalent detailed records description, and each accession must be listed on a separate SF 135:

(i) Records scheduled for permanent retention;

(ii) Unscheduled records (if authorized for transfer by NARA in accordance with paragraph (a)(1)(i) of this section) which have been proposed for permanent retention on the pending SF 135;

(iii) Records which are scheduled for sampling or selecting files for permanent retention by the National Archives; and

(iv) Records for which the agency has implemented the sampling or selection technique specified in the agency records control schedule to separate permanent and disposable records.

(3) Permanent microforms from offices in the Washington, DC, area are stored at the Washington National Records Center. Permenent microforms from all other offices are stored at the National Personnel Records Center—Civilian Personnel Records. Submit Standard Forms 135 proposing the transfer of permanent microforms to the appropriate center. (See 36 CFR 1230.22 for inspection requirements for microforms transferred to a Federal records center.)

(4) Agencies shall prepare an original and two copies of the Standard Form 135, retain one copy for filing purposes, and send the original and one copy to the Federal records center to arrive at least 10 workdays before the desired date of the records shipment. The records center will review the Standard Form 135 for completeness to determine the appropriateness of the transfer. If the transfer is approved, the records center may annotate block 6J of the Standard Form 135 with the Federal records center shelf location where each accession will be stored. The Federal records center returns a copy of the Standard Form 135 to the agency indicating that the records may be transferred. This copy shall be placed in the first carton of the shipment when the records are shipped to the center.

(f) The physical transfer of records to a records center should be accomplished as soon as possible after the agency has received the annotated copy of the Standard Form 135. If NARA has not received the shipment within 90 days after transmittal of the annotated SF 135 to the agency (120 days for agencies located outside the continental United States), it will return the SF 135 to the agency. The agency will then have to resubmit the accessioning paperwork.

(g) Upon receipt of the records shipment at the center, the cartons are matched against the copy of the Standard Form 135 submitted with the transfer. That copy is signed by center officials and returned to the agency for its files. Any changes in location designation will be noted on this receipt copy before it is returned to the agency. This is the only receipt the center will

provide for transferred material, including records having security classifications up to and including ''Secret.''

[45 FR 5705, Jan. 24, 1980, as amended at 48 FR 2776, Jan. 21, 1983; 49 FR 33253, Aug. 22, 1984. Redesignated and amended at 50 FR 15723, 15725, Apr. 19, 1985; 50 FR 26934, June 28, 1985; 54 FR 3778, Jan. 26, 1989. Redesignated and amended at 55 FR 27434, July 2, 1990; 56 FR 14026, Apr. 5, 1991; 56 FR 15134, Apr. 15, 1991; 56 FR 23648, May 23, 1991]

§ 1228.154 Transfers to the National Personnel Records Center (NPRC).

General Records Schedules 1 and 2 specify that certain Federal civilian personnel, medical, and pay records must be centrally stored at the National Personnel Records Center (Civilian Personnel Records), 111 Winnebago Street, St. Louis, MO 63118.

(a) The following four types of records are so specified:

(1) Official personnel folders of separated Federal civilian employees;

(2) Service record cards of employees who separated or transferred on or before December 31, 1947;

(3) Audited individual earnings and pay cards and comprehensive payrolls; and

(4) Employee medical folders of separated Federal civilian employees.

(b) The official personnel folder (OPF) and the employee medical folder (EMF) must be forwarded to the National Personnel Records Center at the same time. Only x rays that will easily fit inside the EMF without folding will be accepted by the Center. X rays over 11¾″×10″ in size that are required for long-term retention must be retained by the agency. The agency must place a notice in the EMF indicating how a subsequent Federal employer may obtain the oversized x rays. The OPF and the EMF must be labeled in the upper right corner to identify the employee by name (last name first), date of birth, and social security number only. Temporary records must be removed from the folders before transmittal. Agencies must make every effort to locate all long-term documents required to be part of the folders and to file them before the folders are transferred. Small quantities of folders (OPF's and EMF's) must be mailed in a sealed envelope. Larger quantities must be mailed in a carton. No advance notification of transmittal or SF 135, Records Transmittal and Receipt, is required from the transferring agency, and no receipt will be furnished by the Center.

(c) A cover letter must accompany loose personnel or medical documents forwarded for interfiling in an OPF or EMF previously sent to the Center. Only those documents required for long-term retention may be forwarded for interfiling. Each document must contain the former employee's current name and name under which formerly employed, if different; date of birth; social security number; and date of separation. Letters accompanying loose personnel documents must clearly identify the agency personnel office and address. Letters accompanying loose medical documents must include the name and address of the agency's designated medical records manager (i.e., medical, health, safety, or personnel officer or other designee). Medical documents required to be part of the EMF may not be sent for interfiling in agency accessions retired prior to September 1, 1984. Such documents must be placed in an EMF and sent to the National Personnel Records Center in accordance with the instructions in paragraph (b) of this section if the employee has left Federal service.

(d) Transfer of fiscal records must be in accordance with the procedures outlined in § 1228.152.

(e) Standard Form 127, Request for Official Personnel Folder (Separated Employee), must be used by agencies when requesting transmission of personnel folders of separated employees. Standard Form 184, Request for Employee Medical Folder (Separated Employee), must be used when requesting medical folders. The name and address of the agency's designated medical records manager must be shown on the request form. Use of the appropriate request form will help ensure prompt transmission of the desired folder. Each request must be submitted in duplicate.

(f) Occupational medical records of separated Federal civilian employees who were not in positions subject to civil service rules and regulations may be retired if the records are properly

scheduled and if access procedures are furnished for use by the Center.

(1) It is recommended that a folder similar to the SF 66–D, Employee Medical Folder, but different in color, be used for medical records of non-civil-service employees.

(2) If the records are not scheduled, an exception may be obtained by submitting a request to the Assistant Archivist for Federal Records Centers, National Archives and Records Administration (NC), Washington, DC 20408. The request must identify the location(s) of records and the volume proposed for transfer. The request will be considered only if an SF 115, Request for Records Disposition Authority, has been received by NARA's Records Appraisal and Disposition Division (NIR).

(g) Medical records of non-Federal employees (e.g., contractor employees and student volunteers) must be disposed of in accordance with the approved agency disposition schedule.

[53 FR 13408, Apr. 25, 1988. Redesignated at 55 FR 27433, July 2, 1990]

§1228.156 Transferring vital records to Federal records centers.

NARA provides for the storage and protection of rights and interests vital records under the dispersed concept as described in part 1236. The facilities of all NARA Federal records centers (FRC) without regard to geographical location are now available for agencies desiring to store these records. Each NARA Federal records center has areas with suitable temperature and humidity controls allowing the safe storage of paper records, magnetic tape, and photographic film. Agencies may make arrangements through the National Archives (NC), Washington, DC 20408, for the transfer of indispensable vital records to these depositories and for their use.

[45 FR 5705, Jan. 24, 1980. Redesignated at 50 FR 15723, Apr. 19, 1985, and 55 FR 27433, July 2, 1990]

§1228.160 Release of equipment.

File equipment received with the transfer of records to a Federal records center will normally be disposed of in accordance with applicable excess personal property regulations. An agency desiring return of the equipment should make this request before transfer of the records to the records center.

[45 FR 5705, Jan. 24, 1980. Redesignated at 50 FR 15723, Apr. 19, 1985, and 55 FR 27433, July 2, 1990]

§1228.162 Use of records in Federal records centers.

Each agency record which is accepted by the Archivist of the United States for storage, processing, and servicing in accordance with 44 U.S.C. 3103 shall, for the purposes of this section, be considered to be maintained by the agency which deposited the record. The Archivist of the United States will not disclose the record except to the agency which maintains the record, or under rules established by that agency which are not inconsistent with existing laws.

(a) Standard Form 180, Request Pertaining to Military Records, must be used by Federal agencies to obtain information from military service records in the National Personnel Records Center (Military Personnel Records). Agencies may furnish copies of that form to the public to aid in inquiries. Members of the public and nongovernmental organizations also may obtain copies of Standard Form 180 by submitting a written request to the National Personnel Records Center (Military Personnel Records), 9700 Page Boulevard, St. Louis, MO 63132.

(b) Requests for Federal civilian personnel files and medical files from the National Personnel Records Center must be made in accordance with §1228.154. Requests for medical records retired to other Federal Records Centers prior to September 1, 1984, must be made on Optional Form 11, Reference Request—Federal Records Centers. The request must include the name and address of the agency's designated medical records manager.

(c) For any other requests, agencies should use Optional Form 11, Reference Request—Federal Records Centers, or a form jointly designated by that agency and NARA.

[45 FR 5707, Jan. 24, 1980. Redesignated at 50 FR 15723, Apr. 19, 1985, and amended at 53 FR 13409, Apr. 25, 1988. Redesignated at 55 FR 27433, July 2, 1990]

§ 1228.164 Disposal clearances for records in Federal records centers.

(a) Records at the National Personnel Records Center covered by General Records Schedules 1 and 2 will be destroyed in accordance with those schedules without further agency clearance.

(b) Contingent records (records of Federal agencies scheduled for destruction after occurrence of an event at some unspecified time in the future) held by Federal records centers will be destroyed upon receipt of agency concurrence in response to NA Form 13000, Agency Review for Contingent Disposal, or other written concurrence. If the agency does not respond to the review notice within 90 calendar days, the records center may return the records to the agency and reject future transfers of that records series.

(c) Other records of Federal agencies held by Federal records centers will be destroyed with the concurrence of the agency concerned by use of NA Form 13001, Notice of Intent to Destroy Records, or other written concurrence for each disposal action. If an agency is notified of the eligibility of its records for disposal and the agency fails to respond to this notification within 90 calendar days, the records will be destroyed in accordance with the appropriate disposition authority. If an agency does not concur in the scheduled destruction of an accession, the agency may request extended retention of the records for up to an additional 6 months by submitting written justification, including a new disposal date, within 90 days to the records center director. Further extensions must be requested in accordance with § 1228.54 of this part.

[45 FR 5705, Jan. 24, 1980, as amended at 49 FR 6371, Feb. 21, 1984; 49 FR 36502, Sept. 18, 1984. Redesignated and amended at 50 FR 15723, 15725, Apr. 19, 1985. Redesignated and amended at 55 FR 27434, July 2, 1990; 61 FR 19555, May 2, 1996]

Subpart J—Transfer of Records to the National Archives

§ 1228.180 Authority.

(a) *Transfer of records.* The Archivist of the United States is authorized by 44 U.S.C. 2107 to:

(1) Accept for deposit with the National Archives of the United States the records of a Federal agency or of the Congress determined by the Archivist of the United States to have sufficient historical or other value to warrant their continued preservation by the U.S. Government; and

(2) Direct and effect the transfer to the National Archives of the United States of Federal agency records that have been in existence for more than 30 years and that have been determined by the Archivist of the United States to have sufficient historical or other value to warrant their continued preservation by the U.S. Government.

(b) *Custody of records transferred.* Under 44 U.S.C. 2108, the Archivist of the United States is responsible for the custody, use, and withdrawal of records transferred to him.

(c) *Transferred records subject to statutory or other restrictions.* When records, the use of which is subject to statutory limitations and restrictions, are so transferred, permissive and restrictive statutory provisions concerning the examination and use of records applicable to the head of the transferring agency are applicable to the Archivist of the United States and the employees of the National Archives and Records Administration.

[54 FR 2111, Jan. 19, 1989. Redesignated at 55 FR 27433, July 2, 1990, as amended at 57 FR 22432, May 28, 1992]

§ 1228.182 Types of records to be transferred.

(a) *General.* Records that have been determined by the Archivist of the United States to have sufficient historical or other value to warrant preservation; i.e., appraised by NARA and identified as permanent records, are normally transferred to the National Archives of the United States when:

(1) They are 30 years old; or

(2) At any age when:

(i) The originating agency no longer needs to use the records for the purpose for which they were created or in its regular current business; or

(ii) Agency needs will be satisfied by use of the records in NARA research rooms or by copies of the records; and restrictions on the use of records are acceptable to NARA and do not violate

the Freedom of Information Act (5 U.S.C. 552). Records appraised as permanent that are not yet eligible for transfer because of agency needs or restrictions may be stored in a Federal records center pending transfer. (See subpart I of this part.)

(b) *Archival depositories.* NARA reserves the right to determine and change the archival depository in which records transferred to the National Archives of the United States are stored. Such determinations are normally made as follows:

(1) *Presidential libraries.* Records appropriate for preservation in a Presidential library because they can most effectively be used in conjunction with materials already in that library.

(2) *Regional Archives.* (i) Records of field offices of Federal agencies, except for records of agency field offices located in the Washington, DC area;

(ii) Records including both headquarters and field office records of regional agencies such as the Tennessee Valley Authority; and

(iii) Other records determined by NARA to be of primarily regional or local interest.

(3) *National Archives Building and other Washington, DC area depositories.* (i) Records of Washington, DC area field offices of Federal agencies and other records relating to the District of Columbia and the Washington, DC area, such as records of the National Capital Planning Commission;

(ii) All other records not deposited in a Presidential library or Regional Archives.

[42 FR 57315, Nov. 2, 1977, as amended at 46 FR 60206, Dec. 9, 1981. Redesignated and amended at 50 FR 15723, 15725, Apr. 19, 1985. Redesignated at 55 FR 27433, July 2, 1990, as amended at 57 FR 22432, May 28, 1992]

§1228.183 Certification for retention of records in agency custody.

(a) Permanent records shall be transferred to the National Archives of the United States when the records have been in existence for more than 30 years unless the head of the agency which has custody of the records certifies in writing to the Archivist that the records must be retained in agency custody for use in the conduct of the regular current business of the agency. Records that are scheduled in a NARA-approved records schedule to be transferred to the National Archives of the United States after a specified period of time are subject to the certification requirement only if the records are not transferred as scheduled.

(b) In order to certify that records must be retained for the conduct of regular current business, an agency should consider the following factors:

(1) Character of use (to be retained by an agency, records should be used for the normal routine business of the agency at the time of certification);

(2) Frequency of use (to be retained by an agency, records should be used more than one time per month per file unit); and,

(3) Preservation of the records (to be retained by an agency, permanently valuable records should be preserved in accordance with NARA guidelines).

(c) The written certification of need of a series of 30-year-old records for current agency business must:

(1) Include a comprehensive description and location of records to be retained;

(2) Cite the NARA approved authority for the disposition of the records if scheduled (SF 115 item number);

(3) Describe the current business for which the records are required;

(4) Estimate the length of time the records will be needed by the agency for current business (if no date is provided by the agency, approved certification requests will be effective for a maximum of five years);

(5) Explain why the current needs of the agency cannot be met by the services NARA provides for records deposited with the National Archives of the United States; and,

(6) If the records are being retained to enable the agency to provide routine public reference, cite the statute authorizing this agency activity.

(d) NARA will not accept an agency certification that a specific body of records over 30 years old, regardless of physical form or characteristics, is being used for the ''conduct of the regular current business,'' if that agency is retaining such records primarily to:

(1) Provide to persons outside the agency access which can be provided by NARA; or

(2) Function as an agency archives, unless specifically authorized by statute or NARA.

[57 FR 22433, May 28, 1992]

§ 1228.184 Audiovisual records.

The following types of audiovisual records appraised as permanent shall be transferred to the National Archives as soon as they become inactive or whenever the agency cannot provide proper care and handling of the records, including adequate storage conditions, to facilitate their preservation by the National Archives (see part 1232 of this chapter). In general the physical types described below constitute the minimum record elements for archival purposes that are required to provide for future preservation, duplication, and reference needs.

(a) *Motion pictures.* (1) Agency-sponsored or produced motion picture films (e.g., public information films) whether for public or internal use:

(i) Original negative or color original plus separate optical sound track;

(ii) Intermediate master positive or duplicate negative plus optical track sound track; and,

(iii) Sound projection print and video recording, if both exist.

(2) Agency-acquired motion picture films: Two projection prints in good condition or one projection print and one videotape.

(3) Unedited footage, outtakes and trims (the discards of film productions) that are properly arranged, labeled, and described and show unstaged, unrehearsed events of historical interest or historically significant phenomena:

(i) Original negative or color original; and

(ii) Matching print or videotape.

(b) *Still pictures.* (1) For black-and-white photographs, an original negative and a captioned print although the captioning information can be maintained in another file such as a data base if the file number correlation is clear. If the original negative is nitrate, unstable acetate, or glass based, a duplicate negative on a polyester base is also needed.

(2) For color photographs, the original color negative, color transparency, or color slide; a captioned print of the original color negative; and/or captioning information as described above if for an original color transparency or original color slide; and a duplicate negative, or slide, or transparency, if they exist.

(3) For slide sets, the original and a reference set, and the related audio recording and script.

(4) For other pictorial records such as posters, original art work, and filmstrips, the original and a reference copy.

(c) *Sound recordings.* (1) Disc recordings:

(i) For conventional disc recordings, the master tape and two disc pressings of each recording, typically a vinyl copy for playback at 33⅓ revolutions per minute (rpm).

(ii) For compact discs, the origination recording regardless of form and two compact discs.

(2) For analog audio recordings on magnetic tape (open reel, cassette, or cartridge), the original tape, or the earliest available generation of the recording, and a subsequent generation copy for reference. Section 1232.30(d) of this subchapter requires the use of open-reel analog magnetic tape for original audio recordings.

(d) *Video recordings.* (1) For videotape, the original or earliest generation videotape and a copy for reference. Section 1232.30(c) of this subchapter requires the use of industrial-quality or professional videotapes for use as originals, although VHS copies can be transferred as reference copies.

(2) For video discs, the premaster videotape used to manufacture the video disc and two copies of the disc. Video discs that depend on interactive software and nonstandard equipment may not be acceptable for transfer.

(e) *Finding aids and production documentation.* The following records shall be transferred to the National Archives with the audiovisual records to which they pertain.

(1) Existing finding aids such as data sheets, shot lists, continuities, review sheets, catalogs, indexes, list of captions, and other documentation that are helpful or necessary for the proper identification, or retrieval of audiovisual records. Agencies should contact the Nontextual Archives Division, or

its appropriate audiovisual branch, to determine the type of hardware and software that is currently acceptable for transfer to the National Archives as an agency electronic finding aid that will accompany its audiovisual records. In general, however, agencies must transfer two copies of the electronic finding aid, one in its native format with its field structure documented, and a second copy in a contemporary format available at the time of transfer that NARA will be able to support and import to its database.

(2) Production case files or similar files that include copies of production contracts, scripts, transcripts, and appropriate documentation bearing on the origin, acquisition, release, and ownership of the production.

[61 FR 32336, June 24, 1996]

§1228.186 Cartographic and architectural records.

The following classes of cartographic and architectural records appraised as permanent should be transferred to the National Archives as soon as they become inactive or whenever the agency cannot provide the proper care and handling of the materials to guarantee their preservation.

(a) *Maps and charts.* (1) Manuscript maps; printed and processed maps on which manuscript changes, additions, or annotations have been made for record purposes or which bear manuscript signatures to indicate official approval; and single printed or processed maps that have been attached to or interfiled with other documents of a record character or in any way made an integral part of a record.

(2) Master sets of printed or processed maps in the custody of the agency by which they were issued. Such master sets should be kept segregated from the stock of maps held for distribution and from maps received from other agencies. A master set should include one copy of each edition of a printed or processed map issued.

(3) Computer-related and computer-plotted maps that cannot be reproduced by the National Archives because of destruction of the magnetic tapes or other stored data or because of the unavailability of ADP equipment.

(4) Index maps, card indexes, lists, catalogs, or other finding aids that may be helpful in using the maps transferred.

(5) Records related to preparing, compiling, editing, or printing maps, such as manuscript field notebooks of surveys, triangulation and other geodetic computations, and project folders containing specifications to be followed and appraisals of source materials to be used.

(b) *Aerial photography and remote sensing imagery.* (1) Vertical and oblique negative aerial film, conventional aircraft.

(2) Annotated copy negatives, internegatives, rectified negatives, and glass plate negatives from vertical and oblique aerial film, conventional aircraft.

(3) Annotated prints from aerial film, conventional aircraft.

(4) Infrared, ultraviolet, multispectral (multiband), video, imagery radar, and related tapes, converted to a film base.

(5) Indexes and other finding aids in the form of photo mosaics, flight line indexes, coded grids, and coordinate grids.

(c) *Architectural and related engineering drawings.* (1) Design drawings, preliminary and presentation drawings, and models which document the evolution of the design of a building or structure.

(2) Master sets of drawings which document the condition of a building or structure in terms of its initial construction and subsequent alterations. This category includes final working drawings, ''as-built'' drawings, shop drawings, and repair and alteration drawings.

(3) Drawings of repetitive or standard details of one or more buildings or structures.

(4) ''Measured'' drawings of existing buildings and original or photocopies of drawings reviewed for approval.

(5) Related finding aids and specifications to be followed.

[42 FR 57315, Nov. 2, 1977. Redesignated at 50 FR 15723, Apr. 19, 1985, and 55 FR 27433, July 2, 1990, as amended at 57 FR 22433, May 28, 1992]

§ 1228.188 Electronic records.

(a) *Magnetic tape.* (1) Computer magnetic tape is a fragile medium, highly susceptible to the generation of error by improper care and handling. To ensure that permanently valuable information stored on magnetic tape is preserved, Federal agencies should schedule files for disposition as soon as possible after the tapes are written. When NARA has determined that a file is worthy of preservation, the agency should transfer the file to the National Archives as soon as it becomes inactive or whenever the agency cannot provide proper care and handling of the tapes (see part 1234 of this chapter) to guarantee the preservation of the information they contain.

(2) Agencies shall transfer electronic records to the National Archives either on open reel magnetic tape or on tape cartridges. Open reel magnetic tape shall be on one-half inch 7 or 9 track tape reels recorded at 800, 1600, or 6250 bpi. Tape cartridges shall be 18 track 3480-class cartridges recorded at 37,871 bpi. The data shall be written in ASCII or EBCDIC with all extraneous control characters removed from the data (except record length indicators for variable length records, or marks designating a datum, word, field, block or file), blocked at not higher than 32,760 bytes per block. The open reel magnetic tapes or the tape cartridges on which the data are recorded shall be new or recertified tapes (see part 1234 of this chapter) which have been passed over a tape cleaner before writing and shall be rewound under controlled tension.

(b) *Other magnetic media.* When an electronic file that has been designated for preservation by NARA is maintained on a direct access storage device, the file shall be written on an open reel magnetic tape or on a magnetic tape cartridge that meets the specifications in paragraph (a)(2) of this section. This tape copy shall be transferred to the National Archives.

(c) *Documentation.* Documentation adequate for servicing and interpreting electronic records that have been designated for preservation by NARA shall be transferred with them. This documentation shall include, but not necessarily be limited to completed NARA Form 14097, Technical Description for Transfer of Electronic Records, or its equivalent. Where it has been necessary to strip data of its extraneous control characters (see paragraph (a)(2) of this section), the codebook specifications defining the data elements and their values must match the new format of the data. Guidelines for determining adequate documentation may be obtained from the Office of Records Administration (NI), National Archives and Records Administration, Washington, DC 20408.

[57 FR 22433, May 28, 1992]

§ 1228.190 Transfer of records.

(a) *Policy.* Federal records will be transferred to the National Archives of the United States only if they are listed as permanent on an SF 115, Request for Records Disposition Authority approved by NARA since May 14, 1973, or if they are accretions (continuations of series already accessioned) to holdings of the National Archives. Transfers are initiated by submission of an SF 258, Request to Transfer, Approval and Receipt of Records to the National Archives of the United States.

(b) *Initiation of request to transfer.* (1) NARA will provide the SF 258 for records scheduled for immediate transfer on an SF 115 approved after September 30, 1987. NARA will send the SF 258 to the agency with the approved SF 115. The agency will sign and return the SF 258 to the address indicated on the form.

(2) *Future transfers of series in agency space.* Sixty days before the scheduled date of transfer to the National Archives of the United States, the transferring agency shall submit an SF 258 to the Office of the National Archives (NN) or to the appropriate Regional Archives if so provided on the SF 115. NARA will determine whether specified restrictions are acceptable and whether adequate space and equipment are available.

(3) *Future transfers of series in Federal Records Centers.* NARA will initiate the SF 258 and send it to the agency 90 days before the scheduled transfer date. The agency shall approve or disapprove the SF 258 and send it to the address indicated on the form 60 days before the scheduled transfer date.

(c) *Physical and legal transfer.* The Office of the National Archives will provide shipping or delivery instructions to the agency or Federal Records Center. Legal custody of the records passes to NARA when the NARA official signs the SF 258 acknowledging receipt of the records.

[52 FR 34134, Sept. 9, 1987. Redesignated at 55 FR 27433, July 2, 1990, as amended at 57 FR 22432, 22434, May 28, 1992]

§1228.192 Restrictions on transferred records.

(a) *General.* Before records are transferred to the National Archives, the head of an agency may state in writing restrictions that appear to him or her to be necessary or desirable in the public interest on the use or examination of records. The head of an agency must, however, justify and cite the statute or Freedom of Information Act exemption (5 U.S.C. 552(b)) that authorizes placing restrictions on the use or examination of records being considered for transfer. If the Archivist agrees, restrictions will be placed on the records.

(b) *Records less than 30 years old.* Unless required by law, the Archivist will not remove or relax restrictions placed upon records less than 30 years old without the concurrence in writing of the head of the agency from which the material was transferred or of his or her successor, if any. If the transferring agency has been terminated and there is no successor in function, the Achivist is authorized to relax, remove or impose restrictions in the public interest.

(c) *Records 30 or more years old.* After the records have been in existence for 30 years or more, statutory or other restrictions referred to in this section shall expire unless the Archivist determines, after consulting with the head of the transferring agency, that the restrictions shall remain in force for a longer period. Such restrictions may be extended by the Archivist beyond 30 years only for reasons consistent with standards established in relevant statutory law, including the Freedom of Information Act (5 U.S.C. 552). Restrictions are systematically extended beyond 30 years where agencies advise NARA on the SF 258 that a particular category of records requires such protection. NARA has identified specific categories of records, including classified information and information that would invade the privacy of an individual, which may require extended protection beyond 30 years. See 36 CFR part 1256.

[57 FR 22434, May 28, 1992]

§1228.194 Records subject to the Privacy Act of 1974.

For records constituting systems of records subject to the Privacy Act of 1974 (5 U.S.C. 552a), the agency shall attach to the SF 258 the most recent agency Privacy Act system notice covering the records.

[57 FR 22434, May 28, 1992]

§1228.196 Release of equipment.

Equipment received with the transfer of records to the National Archives will, when emptied, normally be retained by NARA or disposed of in accordance with applicable excess property regulations, unless the transferring agency requests its return.

[42 FR 57316, Nov. 2, 1977. Redesignated at 50 FR 15723, Apr. 19, 1985, and 55 FR 27433, July 2, 1990]

§1228.198 Use of records transferred to the National Archives.

(a) In accordance with 44 U.S.C. 2108, restrictions lawfully imposed on the use of transferred records will be observed and enforced by NARA to the extent to which they do not violate 5 U.S.C. 552. The regulations in subchapters B and C of this title, insofar as they relate to the use of records in the National Archives of the United States apply to official use of the records by Federal agencies as well as to the public.

(b) In instances of demonstrated need, and subject to any restrictions on their use, records deposited in the National Archives may be borrowed for official use outside the building in which they are housed by Federal agencies and the Congress, subject to the following conditions:

(1) Documents of high intrinsic value shall not be removed from the building in which they are housed except with the written approval of the Archivist;

(2) Records will not be loaned to enable agencies to answer routine reference inquiries from other agencies or the public;

(3) Records in fragile condition, or otherwise deteriorated to an extent that further handling will endanger them, will not be loaned;

(4) Each official who borrows records shall provide a receipt for them at the time they are delivered and shall be responsible for their prompt return upon the expiration of the loan period specified by NARA; and

(5) Each official who borrows computer magnetic tapes shall assume responsibility for proper care and handling of the tapes.

[42 FR 57316, Nov. 2, 1977. Redesignated at 50 FR 15723, Apr. 19, 1985, and amended at 50 FR 26935, June 28, 1985. Redesignated at 55 FR 27433, July 2, 1990, as amended at 57 FR 22434, May 28, 1992]

§ 1228.200 Disposal clearances.

No records of a Federal agency still in existence will be disposed of by NARA except with the concurrence of the agency concerned or as authorized on Standard Form 258, Request to Transfer—Approval and Receipt of Records to National Archives of the United States.

[42 FR 57316, Nov. 2, 1977. Redesignated at 50 FR 15723, Apr. 19, 1985, and 55 FR 27433, July 2, 1990]

Subpart K—Agency Records Centers

§ 1228.220 Authority.

Federal agencies are authorized to maintain and operate records centers for the storage, servicing, and disposal of their own noncurrent records when these centers are approved by the Archivist (44 U.S.C. 3103). Centers operated by Federal agencies are referred to in this subchapter B as ''agency records centers.''

[47 FR 34787, Aug. 11, 1982. Redesignated at 50 FR 15723, Apr. 19, 1985, and 55 FR 27433, July 2, 1990]

§ 1228.222 Facility standards for agency records centers.

Inspection of agency records centers by NARA shall include an evaluation of the agency's compliance with the facility standards for records centers specified below:

(a) *General.* (1) The facility should be a single-story building, at or above grade level, constructed with noncombustible materials.

(2) A floor load limit shall be established for the records storage area by a structural engineer. The allowable load limit shall be posted in a conspicuous place and shall not be exceeded.

(3) Steel shelving or other open-shelf records storage equipment shall be braced to prevent collapse under full load in accordance with Federal Specifications AS–S–271 or AA–S–1047. The records storage height shall not exceed 15 feet. Agencies operating records centers which have storage heights in excess of 15 feet may apply in writing to the National Archives (NC), Washington, DC 20408, for an exemption to this requirement. If a request for exemption is denied, agencies will be required to remodel existing centers to meet the 15-foot requirement.

(4) The area occupied by the center shall be equipped with an anti-intrusion alarm system, or equivalent, to protect against unlawful entry after hours.

(b) *Fire safety*. (1) All walls separating records areas from each other and from other storage areas in the building shall be 4-hour fire resistant. The records areas shall not exceed 40,000 square feet each. Two-hour-rated firewalls shall be provided between the records storage areas and other auxiliary spaces. Penetrations in the walls shall not reduce the specified fire resistance ratings.

(2) Openings in firewalls separating records storage areas shall be avoided as far as possible but if openings are necessary they shall be protected by self-closing or automatic Class A firedoors, or equivalent, on each side of the wall openings.

(3) Roof support structures that cross or penetrate firewalls shall be cut and supported independently on each side of the firewall.

(4) If firewalls are erected with expansion joints, the joints shall be protected to their full height with No. 10 iron astragals lapping the opening on each side of the firewall.

(5) Building columns in the records storage areas shall be 2-hour fire resistant from the floor to the point where they meet the ceiling or roof framing system.

(6) Automatic roof vents shall not be designed into new or existing buildings.

(7) Where lightweight steel roof or floor supporting members (e.g., bar joists having top chords with angles 2 by 1½ inches or smaller, ¼-inch thick or smaller, and 13/16-inch or smaller web diameters) are present, they shall be protected either by applying a 10 minute fire resistive coating to the top chords of the joists, or by retrofitting the sprinkler system with large drop sprinkler heads. Retrofitting may require modifications to the piping system to ensure that adequate water capacity and pressure are provided in the areas to be protected with these large drop sprinkler heads.

(8) Furnace or boiler rooms shall be separated from records storage areas by 4-hour-rated firewalls, with no openings directly from these rooms to the records storage areas. No open flame (oil or gas) equipment or unit heaters shall be installed or used in any records storage area.

(9) The arrangement of the records storage equipment shall be such that there shall be no dead-end aisles. Equipment rows running perpendicular to the wall shall terminate at least 18 inches from the wall.

(10) No oil-type electrical transformers, regardless of size, except thermally protected devices included in fluorescent light ballasts, shall be installed in the records storage areas. All electrical wiring shall be in metal conduit, except that armored cable may be used where flexible connections to light fixtures are required.

(11) All records storage and adjoining areas shall be protected by automatic wetpipe sprinklers. Automatic sprinklers are specified herein because they provide the most effective fire protection for high-piled storage of paper records on open-type shelving.

NOTE: Other automatic extinguishing systems or protective measures may provide an acceptable level of fire-loss risk depending upon specific conditions, such as type or importance of the records, the type and stacking height of the storage equipment used; or how the space is designed, controlled, and operated (as well as its value). Agencies may elect to use alternate standards, as appropriate to their needs, such as those issued by the National Fire Protection Association (see NFPA 13, NFPA 231, NFPA 231C, NFPA 232, and NFPA 232AM). Also, agencies may consult the Chief of the Accident and Fire Prevention Branch in the GSA regional office about these or other systems and protective measures.

(12) The sprinkler system shall be rated at 286 degrees Fahrenheit and designed to provide 0.30 gpm per square foot for the most remote 1,500 square feet of floor area with a minimum flowing pressure of 7.0 psi at the most remote sprinkler head. Installation shall be in accordance with Standard Number 13 of the National Fire Protection Association.

(13) Maximum spacing of the sprinkler heads shall be on a 10-foot grid and the positioning of the heads shall provide complete, unobstructed coverage, with a clearance of not less than 18 inches from the top of the highest stored materials.

(14) The sprinkler system shall be equipped with a water-flow alarm connected to a continuously staffed fire department or central station, with responsibility for immediate response.

(15) A manual fire alarm system shall be provided with central station service or other automatic means of notifying the municipal fire department. A manual alarm pull station shall be located adjacent to each exit. Supplemental manual alarm stations are permitted within the records storage areas.

(16) All water cutoff valves in the sprinkler system shall be equipped with automatic closure alarm connected to a continously staffed station, with responsibility for immediate response.

(17) A dependable water supply free of interruption shall be provided. This normally requires a backup supply system having sufficient pressure and capacity to meet both firehose and sprinkler requirements for 2 hours.

(18) Interior firehose stations equipped with a 1½-inch diameter hose shall be provided in the records storage areas, enabling any point in the records storage area to be reached by a 50-foot hose stream from a 100-foot

hose lay. The fire hoses shall not be provided, however, unless training in the handling and use of small hoses, protective gear, and breathing equipment has been given, and these protective items are available for brigade members.

(19) In addition to the designed sprinkler flow demand, 500 gpm shall be provided for hose stream demand. The hose stream demand shall be calculated into the system at the base of the main sprinkler riser.

(20) Fire hydrants should be located within 250 feet of each exterior entrance or other access to the records center that could be used by firefighters. All hydrants should be at least 50 feet away from the building walls and adjacent to a roadway usable by fire apparatus.

(21) Portable water-type fire extinguishers (2½-gallon stored pressure-type) shall be provided at each fire alarm striking station.

(22) Catwalks may be provided in the aisles between the metal stacks in high-activity records storage areas without provision of sprinklers under the walkway. Where provided, the walking surface of the catwalks shall be of expanded metal at least 0.09-inch thickness with a 2-inch mesh length. The surface opening ratio shall be equal to or greater than that outlined in Military Specification (MIL–M–17194C) of March 8, 1955. The sprinkler water demand for protection over bays with catwalks where records are not oriented perpendicular to the aisles shall be calculated hydraulically to give 0.3 gpm per square foot for the most remote 2,000 square feet.

(23) Storage of hazardous cellulose nitrate film requires special facilities not covered by the above standards. (See NFPA 40 and NFPA 232.)

(c) *Archives.* (1) Archival materials, whether on paper, plastic, or other media, generally require a much higher level of protection than temporary records, such as environmentally controlled and filtered storage space, and other safety measures not included in this section on agency records centers.

(2) Firesafety criteria for archives shall be the same as that for records centers, except that fire detection shall be incorporated into the archival storage areas in accordance with NFPA Standard 72E, and fire divisions in the archival storage areas may be reduced in size to reflect a management decision on the maximum amount of archives subject to damage or loss from fire.

[45 FR 5705, Jan. 24, 1980, as amended at 47 FR 34787, Aug. 11, 1982. Redesignated at 50 FR 15723, Apr. 19, 1985, and 55 FR 27433, July 2, 1990]

§ 1228.224 Requests for authority to establish or relocate records centers.

No agency records center shall be established or relocated from one city to another without the prior written approval of NARA.

(a) *Exclusions.* For purposes of this section, the term ''agency records center'' excludes:

(1) Records staging areas containing either less than 5,000 square feet of storage space or less than 25,000 cubic feet of records each used by agencies for the temporary storage of materials before their transfer to a records center or other disposition, provided no records are held in these staging areas more than 5 years. The facility standards in § 1228.222 apply to these staging areas.

(2) Records holding areas of either less than 5,000 square feet of floor space or less than 25,000 cubic feet of holdings each used solely for the storage of noncurrent records that are not suitable for transfer to a records center or archives for economic, high security, technical servicing, or other reasons. The facility standards is § 1228.222 apply to these records areas.

(b) *Content of requests.* Requests for authority to establish or relocate an agency records center shall be submitted in writing to the Archivist of the United States. These requests shall specify:

(1) Proposed location of the agency records center,

(2) Space to be occupied in gross square feet,

(3) Nature and quantity of records to be stored,

(4) Total personnel to be employed, and

(5) Justification for the proposed center which shall include a comparison between the annual cost per cubic foot

to store the records in the agency records centers and the cost to store the same records in a NARA Federal records center. An analysis of NARA's Federal records center space and equipment cost may be obtained from the Office of Federal Records Centers (NC), National Archives, Washington, DC 20408. The justification also should indicate whether the records to be stored in the agency center have high security classification, require specialized processing or high-cost indexing, or are to be used by technical agency personnel stationed at the records center.

(c) *Approval of requests.* Requests for the establishment or relocation of an agency records center will be approved by the Archivist of the United States when greater economy or efficiency can be achieved through its operation than by the use of a Federal records center operated by NARA.

[45 FR 5705, Jan. 24, 1980, as amended at 47 FR 34788, Aug. 11, 1982; 50 FR 82, Jan. 2, 1985. Redesignated at 50 FR 15723, Apr. 19, 1985, and 55 FR 27433, July 2, 1990]

PART 1230—MICROGRAPHIC RECORDS MANAGEMENT

Subpart A—General

Sec.
1230.1 Scope of part.
1230.2 Authority.
1230.3 Publications incorporated by reference.
1230.4 Definitions.

Subpart B—Program Requirements

1230.7 Agency responsibilities.

Subpart C—Standards for Microfilming Records

1230.10 Disposition authorization.
1230.12 Preparatory steps prior to filming.
1230.14 Film and image requirements for permanent records or unscheduled records.
1230.16 Film and image requirements for temporary records, duplicates, and user copies.

Subpart D—Standards for the Storage, Use and Disposition of Microform Records

1230.20 Storage.
1230.22 Inspection.
1230.24 Use of microform records.
1230.26 Disposition of microform records.

Subpart E—Centralized Micrographic Services

1230.50 Services available.
1230.52 Fees for services.

AUTHORITY: 44 U.S.C. 2907, 3302 and 3312.

Subpart A—General

SOURCE: 55 FR 27435, July 2, 1990, unless otherwise noted.

§1230.1 Scope of part.

This part provides standards for using micrographic technology in the creation, use, storage, inspection, retrieval, preservation, and disposition of Federal records.

[58 FR 49194, Sept. 22, 1993]

§1230.2 Authority.

As provided in 44 U.S.C. chapters 29 and 33, the Archivist of the United States is authorized to establish standards for the reproduction of records by photographic and microphotographic processes with a view to the disposal of original records; to establish uniform standards within the Government for the creation, storage, use, and disposition of processed microform records; and to establish, maintain, and operate centralized microfilming services for Federal agencies.

§1230.3 Publications incorporated by reference.

(a) *General.* The following publications cited in this section are hereby incorporated by reference into Part 1230. They are available from the issuing organizations at the addresses listed in this section. They are also available for inspection at the Office of the Federal Register, 800 North Capitol Street NW., suite 700, Washington, DC. This incorporation by reference was approved by the Director of the Federal Register in accordance with 5 U.S.C. 552(a) and 1 CFR Part 51. These materials are incorporated as they exist on the date of approval, and a notice of any change in these materials will be published in the FEDERAL REGISTER.

(b) *American National Standards Institute (ANSI and International (ISO) standards.* ANSI and ISO standards cited in

this part are available from the American National Standards Institute, 11 West 42nd St., New York, NY 10036.

ANSI/NAPM IT9.1–1992, American National Standard for Imaging Media (Film)—Silver-Gelatin Type—Specifications for Stability.

ANSI IT9.2–1991, American National Standard for Imaging Media—Photographic Processed Films, Plates, and Papers—Filing Enclosures and Storage Containers.

ANSI IT9.11–1991, American National Standard for Imaging Media—Processed Safety Photographic Film—Storage.

ANSI IT2.19–1990, American National Standard for Photography—Density Measurements—Geometric Conditions for Transmission Density.

ANSI/ISO 5/3–1984, ANSI PH2.18–1985, Photography (Sensitometry)—Density Measurements—Spectral Conditions.

(c) *Association of Information and Image Management (AIIM) Standards.* The following AIIM standards are available from the Association of Information and Image Management, 1100 Wayne Avenue, suite 1100, Silver Spring, MD 20910. AIIM standards that are identified as Federal Information Processing Standards (FIPS) are also available from the address shown in paragraph (d).

ANSI/AIIM MS1–1988, Recommended Practice for Alphanumeric Computer-Output Microforms—Operational Practices for Inspection and Quality Control. (FIPS 82).

ANSI/AIIM MS5–1991, Microfiche. (FIPS 54–1).

ANSI/AIIM MS14–1988, Specifications for 16mm and 35mm Roll Microfilm. (FIPS 54–1).

ANSI/AIIM MS19–1987, Recommended Practice for Identification of Microforms.

ANSI/AIIM MS23–1991, Practice for Operational Procedures/Inspection and Quality Control of First-generation, Silver Microfilm of Documents.

ANSI/AIIM MS32–1987, Microrecording of Engineering Source Documents on 35mm Microfilm.

ANSI/AIIM MS41–1988, Unitized Microfilm Carriers (Aperture, Camera, Copy, and Image Cards).

ANSI/AIIM MS43–1988, Recommended Practice for Operational Procedures/Inspection and Quality Control for Duplicate Microforms of Documents and From COM.

ANSI/AIIM MS45–1990, Recommended Practice for Inspection of Stored Silver-Gelatin Microforms for Evidence of Deterioration.

ANSI/ISO 3334–1991, ANSI/AIIM MS51–1991, Micrographics—ISO Resolution Test Chart No. 2—Description and Use.

(d) *National Institute of Standards and Technology (NIST) publications.* The following publication is available from the National Institute of Standards and Technology, Office of Standard Reference Materials, Rm. B311 Chemistry, Gaithersburg, MD 20899.

NIST–SRM 1010a, Microcopy Resolution Test Chart (ISO Test Chart No. 2), certified June 1, 1990.

[58 FR 49194, Sept. 22, 1993]

§ 1230.4 Definitions.

For the purpose of this part the following definitions shall apply:

Archival microfilm. A photographic film that meets the standards described in § 1230.14 and that is suitable for the preservation of permanent records when stored in accordance with § 1230.20(a). Such film must conform to film designated as LE 500 in ANSI/NAPM IT9.1–1992.

Background density. The opacity of the area of the microform not containing information.

Computer-assisted retrieval (CAR) system. A records storage and retrieval system, normally microfilm-based, that uses a computer for indexing, automatic markings such as blips or bar codes for identification, and automatic devices for reading those markings and, in some applications, for transporting the film for viewing.

Computer Output Microfilm (COM). Microfilm containing data produced by a recorder from computer generated signals.

Facility. An area set aside for equipment and operations required in the production or reproduction of microforms either for internal use or for the use of other organizational elements of the Federal Government.

Microfilm. (a) Raw (unexposed and unprocessed) fine-grain, high resolution photographic film with characteristics that make it suitable for use in micrographics;

(b) The process of recording microimages on film; or

(c) A fine-grain, high resolution photographic film containing an image greatly reduced in size from the original.

Microform. A term used for any form containing microimages.

Microimage. A unit of information such as a page of text or a drawing,

that has been made too small to be read without magnification.

Permanent record. Any record (see definition in 44 U.S.C. 3301) that has been determined by the Archivist of the United States to have sufficient historical or other value to warrant its continued preservation by the Government.

Temporary record. Any record approved by the Archivist of the United States for disposal, either immediately or after a specified retention period. Temporary records may warrant microfilming for economies of storage and distribution.

Unscheduled record. Any record that has not been appraised by NARA, i.e., a record that has neither been approved for disposal nor designated as permanent by the Archivist of the United States in accordance with part 1228 of this chapter.

Use or work copies. Duplicates of original film which are prepared for use as reference copies or as duplication masters for recurring or large-scale duplication. These copies are not to be confused with the preservation master copies which are stored under the conditions in § 1230.20 and which are not to be used for reference purposes.

[55 FR 27435, July 2, 1990, as amended at 58 FR 49195, Sept. 22, 1993]

Subpart B—Program Requirements

SOURCE: 58 FR 49195, Sept. 22, 1993, unless otherwise noted.

§ 1230.7 Agency responsibilities.

The head of each Federal agency must ensure that the management of microform records incorporates the following elements:

(a) Assigning responsibility to develop and implement an agencywide program for managing all records on microform media and notifying the National Archives and Records Administration (NI), Washington, DC 20408 of the name and title of the person assigned the responsibility.

(b) Integrating the management of microform records with other records and information resources management programs of the agency.

(c) Incorporating microform records management objectives, responsibilities, and authorities in pertinent agency directives and disseminating them throughout the agency as appropriate.

(d) Establishing procedures for addressing records management concerns, including recordkeeping and disposition requirements, before approving new microform records systems or enhancements to existing systems.

(e) Ensuring that adequate training is provided for the managers and users of microform records.

(f) Developing and securing NARA approval of records schedules covering microform records, and ensuring proper implementation of the schedule provisions.

(g) Ensuring that computerized indexes associated with microform records, such as in a computer-assisted retrieval (CAR) system, are scheduled in accordance with part 1234 of this chapter.

(h) Reviewing the agency's program periodically to ensure compliance with NARA standards in this part for the creation, storage, use, inspection, and disposition of microform records.

Subpart C—Standards for Microfilming Records

SOURCE: 55 FR 27436, July 2, 1990, unless otherwise noted.

§ 1230.10 Disposition authorization.

(a) *Permanent or unscheduled records.* Agencies must schedule the disposition of both source documents (originals) and microforms by submitting Standard Form (SF) 115, Request for Records Disposition Authority, to NARA in accordance with part 1228 of this chapter. Source documents may not be disposed of before NARA authorization is received. The original records shall not be destroyed after microfilming when NARA determines that the original records have intrinsic value or when NARA concludes that the microforms present reference problems because of the access restrictions, including security classification, or other characteristics of the original records.

(1) Agencies using microfilming methods and procedures meeting the standards in § 1230.14 shall include on the SF 115 the following certification:

''This certifies that the records described on this form were (or will be) microfilmed in accordance with the standards set forth in 36 CFR part 1230.''

(2) Agencies using microfilming methods, materials and procedures that do not meet the standards in § 1230.14(a) shall include on the SF 115 a description of the system and standards used.

(3) Agencies proposing to retain and store the silver original microforms of permanent records after disposal of the original records shall include on the SF 115 a statement that the agency's storage conditions shall comply with the standards of § 1230.20 and that the inspections required by § 1230.22 will be performed.

(b) *Temporary records.* Agencies do not need to obtain further NARA approval before disposing of scheduled temporary records that have been microfilmed. The approved retention period for temporary records shall be applied to microform copies of such records; the original records shall be destroyed upon verification of the microfilm, unless legal requirements preclude early destruction of the originals.

§ 1230.12 Preparatory steps prior to filming.

(a) The integrity of the original records authorized for disposal shall be maintained by ensuring that the microforms are adequate substitutes for the original records and serve the purpose for which such records were created or maintained. Copies shall be complete and contain all information shown on the originals.

(b) The records shall be arranged, identified, and indexed so that any particular document or component of the records can be located. Each microform roll or fiche shall include accurate titling information on a titling target or header. At a minimum, titling information shall include the name of the agency and organization; the title of the records; the number or identifier for each unit of film; the security classification, if any; and the inclusive dates, names, or other data identifying the records to be included on a unit of film. For fiche, complete titling information may be placed as a microimage in frame 1 if the information will not fit on the header.

(c) Each microform shall contain an identification target showing the date of filming. When necessary to give the film copy better legal standing, the target shall also identify the person authorizing the microfilming. See ANSI/AIIM MS19–1987 for standards for identification targets.

(d) The following formats are mandatory standards for microforms.

(1) *Roll film*—(i) *Source documents.* The formats described in ANSI/AIIM MS14–1988 must be used for microfilming source documents on 16mm and 35mm roll film. A reduction ratio no greater than 1:24 is recommended for typewritten or correspondence types of documents. See ANSI/AIIM MS23–1991 for determining the appropriate reduction ratio and format for meeting the image quality requirements. When microfilming on 35mm film for aperture card applications, the format dimensions in ANSI/AIIM MS32–1987, Table 1 are mandatory, the aperture card format ''D Aperture'' shown in ANSI/AIIM MS41–1988, Figure 1, must be used. The components of the aperture card, including the paper and adhesive, must conform to the requirements of ANSI IT9.2–1991. The 35mm film used in the aperture card application must conform to film designated as LE500 in ANSI/NAPM IT9.1–1992.

(ii) *COM.* Computer output microfilm (COM) generated images shall be the simplex mode described in ANSI/AIIM MS14–1988 at an effective ratio of 1:24 or 1:48 depending upon the application.

(2) *Microfiche.* For microfilming source documents or computer generated information (COM) on microfiche, the appropriate formats and reduction ratios prescribed in ANSI/AIIM MS5–1990 must be used as specified for the size and quality of the documents being filmed. See ANSI/AIIM MS23–1991 for determining the appropriate reduction ratio and format for meeting the image quality requirements.

(e) *Index placement*—(1) *Source documents.* When filming original (source) documents, all indexes, registers, or other finding aids, if microfilmed, shall be placed either in the first frames of the first roll of film or in the last

frames of the last roll of film of a series or in the last frames of the last microfiche or microfilm jacket of a series.

(2) *COM.* Computer-generated microforms shall have the indexes following the data on a roll of film or in the last frames of a single microfiche, or the last frames of the last fiche in a series. Other index locations may be used only if dictated by special system constraints.

[55 FR 27436, July 2, 1990, as amended at 58 FR 49195, Sept. 22, 1993; 60 FR 13908, Mar. 15, 1995]

§ 1230.14 Film and image requirements for permanent records or unscheduled records.

(a) *Application.* The following standards apply to the microfilming of permanent records where the original paper record will be destroyed or otherwise disposed of. Systems that produce original permanent records on microfilm with no paper originals, such as computer output microfilm (COM), must be designed so that they produce microfilm which meets the standards of this section. Unscheduled records from systems such as COM must also meet the standards of this section. Prior NARA approval of a SF 115 is required before unscheduled paper records are disposed of after microfilming.

(b) *Film stock standards.* Only polyester-based silver gelatin type film that conforms to ANSI/NAPM IT9.1–1992 for LE 500 film must be used in all applications.

(c) *Processing standards.* Microforms shall be processed so that the residual thiosulfate ion concentration will not exceed 0.014 grams per square meter in accordance with ANSI/NAPM IT9.1–1992. Processing shall be in accordance with processing procedures in ANSI/AIIM MS1–1988 and MS23–1991.

(d) *Quality standards*—(1) *Resolution*—(i) *Source documents.* The method for determining minimum resolution on microforms of source documents shall conform to the Quality Index Method for determining resolution and anticipated losses when duplicating as described in ANSI/AIIM MS23–1991 and MS43–1988. Resolution tests shall be performed using a NIST–SRM 1010a, Microcopy Resolution Test Chart (a calibrated and certified photographic reproduction) as specified in ISO 3334–1991 (the standard practice for using the test chart), and the patterns will be read following the instructions of ISO 3334–1991. The character used to determine the height used in the Quality Index formula shall be the smallest character used to display information. A Quality Index of five is required at the third generation level.

(ii) *COM.* Computer output microforms (COM) shall meet the requirements of ANSI/AIIM MS1–1988.

(2) *Background density of images.* The background ISO standard visual diffuse transmission density on microforms shall be appropriate to the type of documents being filmed. The procedure for density measurement is described in ANSI/AIIM MS23–1991 and the densitometer shall be in accordance with ANSI/ISO 5/3–1984, for spectral conditions and ANSI IT2.19–1990, for geometric conditions for transmission density. Recommended visual diffuse transmission background densities for images of documents are as follows:

Classification	Description of document	Background density
Group 1.	High-quality, high-contrast printed books, periodicals, and black typing.	1.3–1.5
Group 2.	Fine-line originals, black opaque pencil writing, and documents with small high-contrast printing.	1.15–1.4
Group 3.	Pencil and ink drawings, faded printing, and very small printing, such as footnotes at the bottom of a printed page.	1.0–1.2
Group 4.	Low-contrast manuscripts and drawings, graph paper with pale, fine-colored lines; letters typed with a worn ribbon; and poorly printed, faint documents.	0.8–1.0
Group 5.	Poor-contrast documents (special exception).	0.7–0.85

Recommended visual diffuse transmission densities for computer generated images are as follows:

Film type	Process	Density measurement method	Min. Dmax*	Max. Dmin*	Minimum density difference
Silver gelatin	Conventional	Printing or diffuse	0.75	0.15	0.60
Silver gelatin	Full reversal	Printing	1.50	0.20	1.30

*Character or line density, measured with a microdensitometer or by comparing the film under a microscope with an image of a known density.

(3) *Base plus fog density of films.* The base plus fog density of unexposed, processed films should not exceed 0.10. When a tinted base film is used, the density will be increased. The difference must be added to the values given in the tables in paragraph (d)(2) of this section.

(4) *Line or Stroke Width.* Due to optical limitations in most photographic systems, film images of thin lines appearing in the original document will tend to fill in as a function of their width and density. Therefore, as the reduction ratio of a given system is increased, the background density shall be reduced as needed to ensure that the copies produced will contain legible characters.

[55 FR 27436, July 2, 1990, as amended at 58 FR 49195, Sept. 22, 1993]

§ 1230.16 Film and image requirements for temporary records, duplicates, and user copies.

(a) *Temporary records with a retention period over 99 years.* Agencies must follow the film and image requirements in § 1230.14.

(b) *Other temporary records.* Agencies must select an appropriate film stock that meets agency needs for temporary microforms to be kept for less than 100 years and ensures the preservation of the microforms for their full retention period. NARA does not require use of particular standards for processing microfilm of such temporary records; agencies may consult appropriate ANSI standards or manufacturer's instructions.

[58 FR 49196, Sept. 22, 1993]

Subpart D—Standards for the Storage, Use and Disposition of Microform Records

SOURCE: 55 FR 27438, July 2, 1990, unless otherwise noted.

§ 1230.20 Storage.

(a) *Permanent and unscheduled records.* The extended term storage conditions specified in ANSI IT9.11–1991 and ANSI IT9.2–1991 are required for storing permanent and unscheduled microform records, except that the relative humidity of the storage area must be a constant 35% RH, plus or minus 5%. Non-silver copies of permanent or unscheduled microforms must not be stored in the same storage area as silver gelatin originals or duplicate copies.

(b) *Temporary records.* Temporary microform records must be stored under conditions that will ensure their preservation for their full retention period. Agencies may consult ANSI IT9.11–1991 and ANSI IT9.2–1991 to determine appropriate storage conditions; however, NARA does not require adherence to this standard for temporary records.

[58 FR 49196, Sept. 22, 1993]

§ 1230.22 Inspection.

(a) *Permanent and unscheduled records.*

(1) Master films of permanent records microfilmed in order to dispose of the original records, master films of permanent records originally created on microfilm, and other master films scheduled for transfer to the National Archives, must be inspected by the agency creating the film when the films are 2 years old and, until they are transferred to a Federal records center or to the National Archives, every 2 years thereafter. The inspection must be made in accordance with ANSI/AIIM MS45–1990.

(2) Microforms cannot be accepted for deposit with the National Archives of the United States until the first inspection (occurring after the microforms are 2 years old) has been

performed. Permanent microforms may be transferred to a Federal records center only after the agency has performed the first inspection or has certified that the microforms will be inspected by the agency, an agency contractor, or the Federal records center (on a reimbursable basis) when they become 2 years old.

(3) To facilitate inspection, an inventory of microfilm must be maintained, listing each microform series/publication by production date, producer, processor, format, and results of previous inspections.

(4) The elements of the inspection shall consist of:

(i) An inspection for aging blemishes following ANSI/AIIM MS45–1990;

(ii) A rereading of resolution targets;

(iii) A remeasurement of density; and

(iv) A certification of the environmental conditions under which the microforms are stored, as specified in § 1230.20(a).

(5) An inspection report must be prepared, and a copy must be furnished to NARA in accordance with § 1230.26(b). The inspection report must contain:

(i) A summary of the inspection findings, including:

(A) A list of batches by year that includes the identification numbers of microfilm rolls and microfiche in each batch;

(B) The quantity of microforms inspected;

(C) An assessment of the overall condition of the microforms;

(D) A summary of any defects discovered, e.g., redox blemishes or base deformation; and

(E) A summary of corrective action taken.

(ii) A detailed inspection log created during the inspection that contains the following information:

(A) A complete description of all records inspected (title; roll or fiche number or other unique identifier for each unit of film inspected; security classification, if any; and inclusive dates, names, or other data identifying the records on the unit of film);

(B) The date of inspection;

(C) The elements of inspection (see subparagraph (a)(4) of this section);

(D) Any defects uncovered; and

(E) The corrective action taken.

(6) An agency having in its custody a master microform that is deteriorating, as shown by the inspection, shall prepare a silver duplicate in accordance with § 1230.14 to replace the deteriorating master. The duplicate film will be subject to the 2-year inspection requirement before transfer to a Federal Record Center or to the National Archives.

(7) Inspection must be performed in an environmentally controlled area in accordance with ANSI/AIIM MS45–1990.

(b) *Temporary records.* Inspection by sampling procedures described in § 1230.22(a) is recommended but not required.

[55 FR 27438, July 2, 1990, as amended at 58 FR 49196, Sept. 22, 1993]

§ 1230.24 Use of microform records.

(a) The silver gelatin original microform or duplicate silver gelatin microform created in accordance with § 1230.14 of this part (archival microform) must not be used for reference purposes. Duplicates must be used for reference and for further duplication on a recurring basis or for large-scale duplication, as well as for distribution of records on microform. Agency procedures must ensure that the archival microform remains clean and undamaged during the process of making a duplicating master.

(b) Agencies retaining the original record in accordance with an approved records disposition schedule may apply agency standards for the use of microform records.

[55 FR 27438, July 2, 1990, as amended at 58 FR 49196, Sept. 22, 1993]

§ 1230.26 Disposition of microform records.

The disposition of microform records shall be carried out in the same manner prescribed for other types of records in part 1228 of this chapter with the following additional requirements:

(a) The silver gelatin original (or duplicate silver gelatin microform created in accordance with § 1230.14) plus one microform copy of each permanent record microfilmed by an agency, must be transferred to an approved agency records center, the National Archives of the United States, or to a Federal

records center, at the time that the records are to be transferred in accordance with the approved records disposition schedule, SF 258, or other authorization for transfer. Non-silver copies must be packaged separately from the silver gelatin original or silver duplicate microform copy and labeled clearly as non-silver copies.

(b) The microforms shall be accompanied by:

(1) Information identifying the agency and organization; the title of the records; the number or identifier for each unit of film; the security classification, if any; the inclusive dates, names, or other data identifying the records to be included on a unit of film;

(2) Any finding aids relevant to the microform that are not contained in the microform; and

(3) The inspection log forms and inspection reports required by § 1230.22(a)(5) and (6).

(c) The information required in this paragraph (b) shall be attached to the SF 135 when records are being transferred to a Federal records center and to the SF 258 when records are being transferred to the legal custody of the National Archives.

[55 FR 27438, July 2, 1990, as amended at 58 FR 49196, Sept. 22, 1993]

Subpart E—Centralized Micrographic Services

§ 1230.50 Services available.

NARA provides reimbursable microfilming services at many of its Federal records centers, including the preparation, indexing, and filming of records, inspection of film, and labeling of film containers. Agencies desiring microfilming services should contact the Office of Federal Records Centers, National Archives (NC), Washington, DC 20408, or the director of the Federal records center serving the agency's records (see § 1228.150 of this chapter).

[50 FR 26935, June 28, 1985. Redesignated at 55 FR 27435, July 2, 1990]

§ 1230.52 Fees for services.

The fees for microfilming services will be announced in NARA bulletins. For microfilming services not listed, contact the office shown in § 1230.50.

[50 FR 26935, June 28, 1985. Redesignated at 55 FR 27435, July 2, 1990]

PART 1232—AUDIOVISUAL RECORDS MANAGEMENT

Subpart A—General

Sec.
1232.1 Applicability and scope.
1232.2 Objectives.
1232.10 Definitions.

Subpart B—Audiovisual Records Management

1232.20 Agency program responsibilities.
1232.22 Nitrocellulose film.
1232.24 Unstable cellulose-acetate film.
1232.26 Storage conditions.
1232.28 Maintenance and operations.
1232.30 Choosing formats.
1232.32 Disposition.

AUTHORITY: 44 U.S.C. 2904 and 3101; and OMB Circular A–130.

SOURCE: 61 FR 32337, June 24, 1996, unless otherwise noted.

Subpart A—General

§ 1232.1 Applicability and scope.

This part prescribes policies and procedures for managing audiovisual records to ensure adequate and proper documentation and authorized, timely, and appropriate disposition.

§ 1232.2 Objectives.

The objectives of audiovisual records management are to achieve the effective creation, maintenance, use, and disposition of audiovisual and related records by establishing standards for maintenance and disposition, physical security, and preservation and by reviewing recordkeeping practices on a continuing basis to improve procedures.

§ 1232.10 Definitions.

For the purposes of this part, the following definitions shall apply (see also § 1220.14 of this chapter for other definitions).

Audiovisual. Any pictorial or aural means of communicating information.

Audiovisual equipment. Equipment used for recording, producing, duplicating, processing, broadcasting, distributing, storing or exhibiting audiovisual materials or for providing any audiovisual services.

Audiovisual production. An organized and unified presentation, developed according to a plan or script, containing visual imagery, sound, or both, and used to convey information. An audiovisual production generally is a self-contained presentation. Audiovisual productions may include motion media with synchronous sound such as motion picture film, videotape or other video formats, audio recordings, and other media such as synchronized audio and visual presentations such as multimedia productions.

Audiovisual records. Records in pictorial or aural form that include still and motion media, sound recordings, graphic works, mixed media, and related finding aids and production files.

Subpart B—Audiovisual Records Management

§ 1232.20 Agency program responsibilities.

Each Federal agency, in providing for effective controls over the creation of records, shall establish an appropriate program for the management of audiovisual records. This program shall be governed by the following requirements:

(a) Prescribe the types of records to be created and maintained so that audiovisual activities and their products are properly documented. (Regulations on the appropriate types of permanent audiovisual records are located in § 1228.184 of this chapter.)

(b) Ensure that adequate training is provided to:

(1) Agency personnel responsible for the disposition of audiovisual records;

(2) Contractor personnel who have temporary custody of audiovisual records; and,

(3) All users who create, handle, or maintain audiovisual records or operate equipment for their use.

(c) Ensure that contract provisions protect the Government's legal title and control over audiovisual records and related documentation produced or maintained by contract. Ensure that contract provisions identify as deliverables any working papers/files that are needed for adequate and proper documentation. Include a provision that permits the Government to inspect contractor facilities used for the storage and handling of permanent or unscheduled audiovisual records. Agencies shall inspect such facilities at least once each year.

(d) Keep inventories indicating the location of all generations of audiovisual records, whether in agency storage or in another facility such as a laboratory or library distribution center.

(e) Schedule disposition of all audiovisual records as soon as practicable after creation. General Records Schedule 21 provides mandatory disposal authorization for temporary audiovisual records common to most Federal offices. Agencies must submit an SF 115, Request for Records Disposition Authority, to NARA to obtain authorization for the disposition of all other audiovisual records. The schedules covering permanent records must specify the different record elements identified in § 1228.184, and must always include related finding aids.

(f) Periodically review agency audiovisual recordkeeping practices for conformance with requirements and take necessary corrective action.

§ 1232.22 Nitrocellulose film.

Nitrocellulose-base film once used in the manufacture of sheet film and motion pictures may be occasionally found in records storage areas. The nitrocellulose base, a substance akin to gun cotton, is chemically unstable and highly inflammable.

(a) Agencies must remove nitrocellulose film materials from records storage areas.

(b) Agencies must immediately notify NARA about the existence of nitrocellulose film materials because of their age and instability. NARA will determine if they may be destroyed or destroyed after a copy is made for transfer, as appropriate.

(c) If NARA appraises nitrate film materials as disposable, but the agency wishes to retain them, agencies must follow the guidance in NFPA 40–1994, Standard for the Storage and Handling

of Cellulose Nitrate Motion Picture Film, which is incorporated by reference. NFPA 40–1994 is available from the National Fire Protection Association, Batterymarch Park, Quincy, MA 02269. This standard is also available for inspection at the Office of the Federal Register, 800 North Capitol Street, NW., suite 700, Washington, D.C. This incorporation by reference was approved by the Director of the Federal Register in accordance with 5 U.S.C. 552(a) and 1 CFR part 51. These materials are incorporated by reference as they exist on the date of approval and a notice of any change in these materials will be published in the FEDERAL REGISTER.

(d) The packing and shipping of nitrate film are governed by the following Department of Transportation regulations: 49 CFR 172.101, Hazardous materials table; 172.504, Transportation; 173.24, Standard requirements for all packages; and 173.177, Motion picture film and X- ray film—nitrocellulose base.

§ 1232.24 Unstable cellulose-acetate film.

Cellulose-acetate film, also known as safety film, is nonflammable and does not represent the same degree of hazard as nitrate film materials. Nonetheless, cellulose-acetate film also deteriorates over time. Temperature, humidity, harmful storage enclosures, and gaseous products influence the rate of deterioration. Agencies shall inspect cellulose-acetate film periodically for an acetic odor, wrinkling, or the presence of crystalline deposits on the edge or surface of the film that indicate deterioration. Agencies shall notify NARA within 30 days after inspection about deteriorating permanent or unscheduled audiovisual records composed of cellulose acetate so that they can be copied.

§ 1232.26 Storage conditions.

Agencies must:

(a) Provide audiovisual records storage facilities that are secure from unauthorized access and make them safe from fire, water, flood, chemical or gas damage and from other harmful conditions. See NFPA 232A–1995, Guide for Fire Protection for Archives and Records Centers issued by the National Fire Protection Association, which is incorporated by reference. The standard is available from the National Fire Protection Association, Batterymarch Park, Quincy, MA 02269. This standard is also available for inspection at the Office of the Federal Register, 800 North Capitol Street, NW., suite 700, Washington, D.C. This incorporation by reference was approved by the Director of the Federal Register in accordance with 5 U.S.C. 552(a) and 1CFR part 51. These materials are incorporated by reference as they exist on the date of approval and a notice of any change in these materials will be published in the FEDERAL REGISTER.

(b) Maintain good ambient storage conditions for permanent or unscheduled audiovisual records. Generally, the temperature should not exceed 70 degrees Fahrenheit and relative humidity should be maintained between 30–40% and not exceed 50%. Avoid fluctuating temperatures and humidity. Cooler temperatures and lower relative humidity are recommended for the storage of all film, to prolong the useful life of the film base and image. Cold temperatures combined with 30–35% relative humidity are especially recommended to retard the fading of color film. Optimal environmental conditions are stated in ANSI/NAPM IT9.11–1993, Imaging Media— Processed Safety Photographic Films—Storage. If possible store all permanently scheduled records in these conditions, and schedule them to be transferred to the National Archives as soon as possible.

(c) For the storage of permanent or unscheduled records, use audiovisual storage containers or enclosures made of noncorroding metal, inert plastics, paper products and other safe materials recommended and specified in ANSI standards: ANSI/NAPM IT9.11–1993, Imaging Media—Processed Safety Photographic Films—Storage; and ANSI IT9.2–1991, Imaging Media—Photographic Processed Films, Plates, and Papers—Filing Enclosures and Storage Containers. These standards, which are incorporated by reference, are available from the American National Standards Institute (ANSI), Inc., 11 West 42nd Street, New York, NY 10036. These standards are also available for

inspection at the Office of the Federal Register, 800 North Capitol Street, NW., suite 700, Washington, D.C. This incorporation by reference was approved by the Director of the Federal Register in accordance with 5 U.S.C. 552(a) and 1 CFR part 51. These materials are incorporated by reference as they exist on the date of approval and a notice of any change in these materials will be published in the FEDERAL REGISTER.

(d) Store originals and use copies (e.g., negatives and prints) separately, whenever practicable.

(e) Store series of permanent and unscheduled x-ray films in accordance with this section, and store series of temporary x-ray films under conditions that will ensure their preservation for their full retention period, in accordance with ANSI/NAPM IT9.11–1993, Imaging Media—Processed Safety Photographic Films—Storage. This requirement does not apply to x-rays that are interspersed among paper records, as in case files.

§ 1232.28 Maintenance and operations.

Agencies must:

(a) Handle audiovisual records in accordance with commonly accepted industry practices because of their extreme vulnerability to damage. For further information, consult the American National Standards Institute (ANSI), Inc., 11 West 42nd Street, New York, NY 10036; and the Society of Motion Picture and Television Engineers, 595 West Hartsdale Avenue, White Plains, NY 10607.

(b) Use only personnel trained to perform their audiovisual duties and responsibilities and ensure that equipment intended for projection or playback is in good working order.

(c) Loan permanent or unscheduled audiovisual records to non-Federal recipients only in conformance with the provisions of part 1228 subpart E of this chapter. Such records may be loaned to other Federal agencies only if a record copy is maintained in the agency's custody.

(d) Take all steps necessary to prevent accidental or deliberate alteration or erasure of audiovisual records.

(e) Ensure that no information recorded on permanent or unscheduled magnetic sound or video media is erased.

(f) If different versions of audiovisual productions (e.g., short and long versions or foreign-language versions) are prepared, keep an unaltered copy of each version for record purposes.

(g) Maintain the association between audiovisual records and the finding aids for them, such as captions and published and unpublished catalogs, and production files and similar documentation created in the course of audiovisual production.

(h) Maintain disposable audiovisual records separate from permanent ones in accordance with General Records Schedule 21 and a records schedule approved by NARA for the agency's other audiovisual records.

§ 1232.30 Choosing formats.

Agencies must:

(a) When ordering photographic materials for permanent or unscheduled records, ensure that still picture negatives and motion picture preprints (negatives, masters, etc.) are composed of polyester bases and are processed in accordance with industry standards as specified in ANSI/ISO 543–1990 (ANSI IT9.6–1991) Photography—Photographic Films—Specifications for Safety Film; and, ANSI/NAPM IT9.1–1992 Imaging Media (Film)—Silver-Gelatin Type—Specifications for Stability, which are incorporated by reference. (Currently, not all motion picture stocks are available on a polyester base.) It is particularly important to ensure that residual sodium thiosulfate (hypo) on newly processed black-and-white photographic film does not exceed .014 grams per square meter. Require laboratories to process film in accordance with this standard. Excessive hypo will shorten the longevity of film and accelerate color fading. Process color film in accordance with the manufacturer's recommendations. If using reversal type processing, request full photographic reversal; i.e., develop, bleach, expose, develop, fix, and wash. The standards cited in this paragraph are available from the American National Standards Institute (ANSI), Inc., 11 West 42nd Street, New York, NY 10036. These

standards are also available for inspection at the Office of the Federal Register, 800 North Capitol Street, NW., suite 700, Washington, D.C. This incorporation by reference was approved by the Director of the Federal Register in accordance with 5 U.S.C. 552(a) and 1 CFR part 51. These materials are incorporated by reference as they exist on the date of approval and a notice of any change in these materials be published in the FEDERAL REGISTER.

(b) Refrain from using motion pictures in a final ''A & B'' format (two precisely matched reels designed to be printed together) for the reproduction of excerpts or stock footage.

(c) Use only industrial or professional recording equipment and videotape, previously unrecorded, for original copies of permanent or unscheduled recordings. Limit the use of consumer formats to distribution or reference copies or to subjects scheduled for disposal. Video cassettes in the VHS format are unsuitable for use as originals of permanent or unscheduled records due to their inability to be copied without significant loss in image quality.

(d) Record permanent or unscheduled audio recordings on ¼-inch open-reel tapes at 3 ¾ or 7 ½ inches per second, full track, using professional unrecorded polyester splice-free tape stock. Audio cassettes, including mini-cassettes, are not sufficiently durable for use as originals in permanent records or unscheduled records although they may be used as reference copies.

§ 1232.32 Disposition.

The disposition of audiovisual records shall be carried out in the same manner as that prescribed for other types of records in part 1228 of this chapter. For further instructions on the transfer of permanent audiovisual records to the National Archives see § 1228.184 of this chapter, Audiovisual Records.

PART 1234—ELECTRONIC RECORDS MANAGEMENT

Subpart A—General

Sec.
1234.1 Scope of part.
1234.2 Definitions.

Subpart B—Program Requirements

1234.10 Agency responsibilities.

Subpart C—Standards for the Creation, Use, Preservation, and Disposition of Electronic Records

1234.20 Creation and use of data files.
1234.22 Creation and use of text documents.
1234.24 Standards for managing electronic mail records.
1234.26 Judicial use of electronic records.
1234.28 Security of electronic records.
1234.30 Selection and maintenance of electronic records storage media.
1234.32 Retention and disposition of electronic records.
1234.34 Destruction of electronic records.

AUTHORITY: 44 U.S.C. 2904, 3101, 3102, and 3105.

SOURCE: 55 FR 19218, May 8, 1990, unless otherwise noted.

Subpart A—General

§ 1234.1 Scope of part.

This part establishes the basic requirements related to the creation, maintenance, use, and disposition of electronic records. Electronic records include numeric, graphic, and text information, which may be recorded on any medium capable of being read by a computer and which satisfies the definition of a record. This includes, but is not limited to, magnetic media, such as tapes and disks, and optical disks. Unless otherwise noted, these requirements apply to all electronic information systems, whether on microcomputers, minicomputers, or mainframe computers, regardless of storage media, in network or stand-alone configurations. This part also covers creation, maintenance and use, and disposition of Federal records created by individuals using electronic mail applications.

[60 FR 44640, Aug. 28, 1995]

§ 1234.2 Definitions.

Basic records management terms are defined in 36 CFR 1220.14. As used in part 1234—

Data base means a set of data, consisting of at least one data file, that is sufficient for a given purpose.

Data base management system means a software system used to access and retrieve data stored in a data base.

Data file means related numeric, textual, or graphic information that is organized in a strictly prescribed form and format.

Electronic information system. A system that contains and provides access to computerized Federal records and other information.

Electronic mail message. A document created or received on an electronic mail system including brief notes, more formal or substantive narrative documents, and any attachments, such as word processing and other electronic documents, which may be transmitted with the message.

Electronic mail system. A computer application used to create, receive, and transmit messages and other documents. Excluded from this definition are file transfer utilities (software that transmits files between users but does not retain any transmission data), data systems used to collect and process data that have been organized into data files or data bases on either personal computers or mainframe computers, and word processing documents not transmitted on an e-mail system.

Electronic record means any information that is recorded in a form that only a computer can process and that satisfies the definition of a Federal record in 44 U.S.C. 3301.

Electronic recordkeeping system. An electronic system in which records are collected, organized, and categorized to facilitate their preservation, retrieval, use, and disposition.

Text documents means narrative or tabular documents, such as letters, memorandums, and reports, in loosely prescribed form and format.

Transmission and receipt data.

(1) *Transmission data.* Information in electronic mail systems regarding the identities of sender and addressee(s), and the date and time messages were sent.

(2) *Receipt data.* Information in electronic mail systems regarding date and time of receipt of a message, and/or acknowledgment of receipt or access by addressee(s).

[55 FR 19218, May 8, 1990, as amended at 60 FR 44641, Aug. 28, 1995]

Subpart B—Program Requirements

§ 1234.10 Agency responsibilities.

The head of each Federal agency shall ensure that the management of electronic records incorporates the following elements:

(a) Assigning responsibility to develop and implement an agencywide program for the management of all records created, received, maintained, used, or stored on electronic media; and notifying the National Archives and Records Administration, Office of Records Administration (NI), Washington, DC 20408 and the General Services Administration, Regulations Branch (KMPR), Washington, DC 20405, of the name and title of the person assigned the responsibility.

(b) Integrating the management of electronic records with other records and information resources management programs of the agency.

(c) Incorporating electronic records management objectives, responsibilities, and authorities in pertinent agency directives and disseminating them throughout the agency as appropriate.

(d) Establishing procedures for addressing records management requirements, including recordkeeping requirements and disposition, before approving new electronic information system or enhancements to existing systems.

(e) Ensuring that adequate training is provided for users of electronic mail systems on recordkeeping requirements, the distinction between Federal records and nonrecord materials, procedures for designating Federal records, and moving or copying records for inclusion in an agency recordkeeping system;

(f) Ensuring that adequate training is provided for users of electronic information system in the operation, care, and handling of the equipment, software, and media used in the system.

(g) Developing and maintaining up-to-date documentation about all electronic information system that is adequate to: Specify all technical characteristics necessary for reading or processing the records; identify all defined inputs and outputs of the system; define the contents of the files and

records; determine restrictions on access and use; understand the purpose(s) and function(s) of the system; describe update cycles or conditions and rules for adding information to the system, changing information in it, or deleting information; and ensure the timely, authorized disposition of the records.

(h) Specifying the location, manner, and media in which electronic records will be maintained to meet operational and archival requirements, and maintaining inventories of electronic information system to facilitate disposition.

(i) Developing and securing NARA approval of records disposition schedules, and ensuring implementation of their provisions.

(j) Specifying the methods of implementing controls over national security-classified, sensitive, proprietary, and Privacy Act records stored and used electronically.

(k) Establishing procedures to ensure that the requirements of this part are applied to those electronic records that are created or maintained by contractors.

(l) Ensuring compliance with applicable Governmentwide policies, procedures, and standards such as those issued by the Office of Management and Budget, the General Accounting Office, the General Services Administration, the National Archives and Records Administration, and the National Institute of Standards and Technology.

(m) Reviewing electronic information system periodically for conformance to established agency procedures, standards, and policies as part of the periodic reviews required by 44 U.S.C. 3506. The review should determine if the records have been properly identified and described, and whether the schedule descriptions and retention periods reflect the current informational content and use. If not, or if substantive changes have been made in the structure, design, codes, purposes, or uses of the system, submit an SF 115, Request for Records Disposition Authority, to NARA.

[55 FR 19218, May 8, 1990, as amended at 60 FR 44641, Aug. 28, 1995]

Subpart C—Standards for the Creation, Use, Preservation, and Disposition of Electronic Records

§ 1234.20 Creation and use of data files.

(a) For electronic information systems that produce, use, or store data files, disposition instructions for the data shall be incorporated into the system's design.

(b) Agencies shall maintain adequate and up-to-date technical documentation for each electronic information system that produces, uses, or stores data files. Minimum documentation required is a narrative description of the system; physical and technical characteristics of the records, including a record layout that describes each field including its name, size, starting or relative position, and a description of the form of the data (such as alphabetic, zoned decimal, packed decimal, or numeric), or a data dictionary or the equivalent information associated with a data base management system including a description of the relationship between data elements in data bases; and any other technical information needed to read or process the records.

[55 FR 19218, May 8, 1990, as amended at 60 FR 44641, Aug. 28, 1995]

§ 1234.22 Creation and use of text documents.

(a) Electronic recordkeeping systems that maintain the official file copy of text documents on elecronic media shall meet the following minimum requirements:

(1) Provide a method for all authorized users of the system to retrieve desired documents, such as an indexing or text search system;

(2) Provide an appropriate level of security to ensure integrity of the documents;

(3) Provide a standard interchange format when necessary to permit the exchange of documents on electronic media between agency computers using different software/operating systems and the conversion or migration of documents on electronic media from one system to another; and

(4) Provide for the disposition of the documents including, when necessary, the requirements for transferring permanent records to NARA (see § 1228.188 of this chapter).

(b) Before a document is created electronically on electronic recordkeeping systems that will maintain the official file copy on electronic media, each document shall be identified sufficiently to enable authorized personnel to retrieve, protect, and carry out the disposition of documents in the system. Appropriate identifying information for each document maintained on the electronic media may include: office of origin, file code, key words for retrieval, addressee (if any), signator, author, date, authorized disposition (coded or otherwise), and security classification (if applicable). Agencies shall ensure that records maintained in such systems can be correlated with related records on paper, microform, or other media.

[55 FR 19218, May 8, 1990, as amended at 60 FR 44641, Aug. 28, 1995]

§ 1234.24 Standards for managing electronic mail records.

Agencies shall manage records created or received on electronic mail systems in accordance with the provisions of this chapter pertaining to adequacy of documentation, recordkeeping requirements, agency records management responsibilities, and records disposition (36 CFR parts 1220, 1222, and 1228).

(a) Agency instructions on identifying and preserving electronic mail messages will address the following unique aspects of electronic mail:

(1) Some transmission data (names of sender and addressee(s) and date the message was sent) must be preserved for each electronic mail record in order for the context of the message to be understood. Agencies shall determine if any other transmission data is needed for purposes of context.

(2) Agencies that use an electronic mail system that identifies users by codes or nicknames or identifies addressees only by the name of a distribution list shall instruct staff on how to retain names on directories or distributions lists to ensure identification of the sender and addressee(s) of messages that are records.

(3) Agencies that use an electronic mail system that allows users to request acknowledgments or receipts showing that a message reached the mailbox or inbox of each addressee, or that an addressee opened the message, shall issue instructions to e-mail users specifying when to request such receipts or acknowledgments for recordkeeping purposes and how to preserve them.

(4) Agencies with access to external electronic mail systems shall ensure that Federal records sent or received on these systems are preserved in the appropriate recordkeeping system and that reasonable steps are taken to capture available transmission and receipt data needed by the agency for recordkeeping purposes.

(5) Some e-mail systems provide calendars and task lists for users. These may meet the definition of Federal record. Calendars that meet the definition of Federal records are to be managed in accordance with the provisions of General Records Schedule 23, Item 5.

(6) Draft documents that are circulated on electronic mail systems may be records if they meet the criteria specified in 36 CFR 1222.34.

(b) Agencies shall consider the following criteria when developing procedures for the maintenance of electronic mail records in appropriate recordkeeping systems, regardless of format.

(1) Recordkeeping systems that include electronic mail messages must:

(i) Provide for the grouping of related records into classifications according to the nature of the business purposes the records serve;

(ii) Permit easy and timely retrieval of both individual records and files or other groupings of related records;

(iii) Retain the records in a usable format for their required retention period as specified by a NARA-approved records schedule;

(iv) Be accessible by individuals who have a business need for information in the system;

(v) Preserve the transmission and receipt data specified in agency instructions; and

(vi) Permit transfer of permanent records to the National Archives and

Records Administration (see 36 CFR 1228.188 and 36 CFR 1234.32(a)).

(2) Agencies shall not store the recordkeeping copy of electronic mail messages that are Federal records only on the electronic mail system, unless the system has all of the features specified in paragraph (b)(1) of this section. If the electronic mail system is not designed to be a recordkeeping system, agencies shall instruct staff on how to copy Federal records from the electronic mail system to a recordkeeping system.

(c) Agencies that maintain their electronic mail records electronically shall move or copy them to a separate electronic recordkeeping system unless their system has the features specified in paragraph (b)(1) of this section. Because they do not have the features specified in paragraph (b)(1) of this section, backup tapes should not be used for recordkeeping purposes. Agencies may retain records from electronic mail systems in an off-line electronic storage format (such as optical disk or magnetic tape) that meets the requirements described at 36 CFR 1234.30(a). Agencies that retain permanent electronic mail records scheduled for transfer to the National Archives shall either store them in a format and on a medium that conforms to the requirements concerning transfer at 36 CFR 1228.188 or shall maintain the ability to convert the records to the required format and medium at the time transfer is scheduled.

(d) Agencies that maintain paper files as their recordkeeping systems shall print their electronic mail records and the related transmission and receipt data specified by the agency.

[60 FR 44641, Aug. 28, 1995]

§ 1234.26 Judicial use of electronic records.

Electronic records may be admitted in evidence to Federal courts for use in court proceedings (Federal Rules of Evidence 803(8)) if trustworthiness is established by thoroughly documenting the recordkeeping system's operation and the controls imposed upon it. Agencies should implement the following procedures to enhance the legal admissibility of electronic records.

(a) Document that similar kinds of records generated and stored electronically are created by the same processes each time and have a standardized retrieval approach.

(b) Substantiate that security procedures prevent unauthorized addition, modification or deletion of a record and ensure system protection against such problems as power interruptions.

(c) Identify the electronic media on which records are stored throughout their life cycle, the maximum time span that records remain on each storage medium, and the NARA-approved disposition of all records.

(d) Coordinate all of the above with legal counsel and senior IRM and records management staff.

[55 FR 19218, May 8, 1990. Redesignated at 60 FR 44641, Aug. 28, 1995]

§ 1234.28 Security of electronic records.

Agencies shall implement and maintain an effective records security program that incorporates the following:

(a) Ensures that only authorized personnel have access to electronic records.

(b) Provides for backup and recovery of records to protect against information loss.

(c) Ensures that appropriate agency personnel are trained to safeguard sensitive or classified electronic records.

(d) Minimizes the risk of unauthorized alteration or erasure of electronic records.

(e) Ensures that electronic records security is included in computer systems security plans prepared pursuant to the Computer Security Act of 1987 (40 U.S.C. 759 *note*).

[55 FR 19218, May 8, 1990. Redesignated at 60 FR 44641, Aug. 28, 1995]

§ 1234.30 Selection and maintenance of electronic records storage media.

(a) Agencies shall select appropriate media and systems for storing agency records throughout their life, which meet the following requirements:

(1) Permit easy retrieval in a timely fashion;

(2) Facilitate distinction between record and nonrecord material;

(3) Retain the records in a usable format until their authorized disposition date; and

(4) When appropriate, meet requirements for transferring permanent records to NARA (see § 1228.188 of this chapter).

(b) The following factors shall be considered before selecting a storage medium or converting from one medium to another:

(1) The authorized life of the records, as determined during the scheduling process;

(2) The maintenance necessary to retain the records;

(3) The cost of storing and retrieving the records;

(4) The records density;

(5) The access time to retrieve stored records;

(6) The portability of the medium (that is, selecting a medium that will run on equipment offered by multiple manufacturers) and the ability to transfer the information from one medium to another (such as from optical disk to magnetic tape); and

(7) Whether the medium meets current applicable Federal Information Processing Standards.

(c) Agencies should avoid the use of floppy disks for the exclusive long-term storage of permanent or unscheduled electronic records.

(d) Agencies shall ensure that all authorized users can identify and retrieve information stored on diskettes, removable disks, or tapes by establishing or adopting procedures for external labeling.

(e) Agencies shall ensure that information is not lost because of changing technology or deterioration by converting storage media to provide compatibility with the agency's current hardware and software. Before conversion to a different medium, agencies must determine that the authorized disposition of the electronic records can be implemented after conversion.

(f) Agencies shall back up electronic records on a regular basis to safeguard against the loss of information due to equipment malfunctions or human error. Duplicate copies of permanent or unscheduled records shall be maintained in storage areas separate from the location of the records that have been copied.

(g) *Maintenance of magnetic computer tape.* (1) Agencies shall test magnetic computer tapes no more than 6 months prior to using them to store electronic records that are unscheduled or scheduled for permanent retention. This test should verify that the tape is free of permanent errors and in compliance with National Institute of Standards and Technology or industry standards.

(2) Agencies shall maintain the storage and test areas for computer magnetic tapes containing permanent and unscheduled records at the following temperatures and relative humidities:

Constant temperature—62 to 68°F.
Constant relative humidity—35% to 45%

(3) Agencies shall rewind under controlled tension all tapes containing unscheduled and permanent records every 3½ years.

(4) Agencies shall annually read a statistical sample of all reels of magnetic computer tape containing permanent and unscheduled records to identify any loss of data and to discover and correct the causes of data loss. In tape libraries with 1800 or fewer reels, a 20% sample or a sample size of 50 reels, whichever is larger, should be read. In tape libraries with more than 1800 reels, a sample of 384 reels should be read. Tapes with 10 or more errors should be replaced and, when possible, lost data shall be restored. All other tapes which might have been affected by the same cause (i.e., poor quality tape, high usage, poor environment, improper handling) shall be read and corrected as appropriate.

(5) Agencies shall copy permanent or unscheduled data on magnetic tapes before the tapes are 10 years old onto tested and verified new tapes.

(6) External labels (or the equivalent automated tape management system) for magnetic tapes used to store permanent or unscheduled electronic records shall provide unique identification for each reel, including the name of the organizational unit responsible for the data, system title, and security classification, if applicable. Additionally, the following information shall be

maintained for (but not necessarily attached to) each reel used to store permanent or unscheduled electronic records: file title(s); dates of creation; dates of coverage; the recording density; type of internal labels; volume serial number, if applicable; number of tracks; character code/software dependency; information about block size; and reel sequence number, if the file is part of a multi-reel set. For numeric data files, include record format and logical record length, if applicable; data set name(s) and sequence, if applicable; and number of records for each data set.

(7) Agencies shall prohibit smoking and eating in magnetic computer tape storage libraries and test or evaluation areas that contain permanent or unscheduled records.

(h) *Maintenance of direct access storage media.* (1) Agencies shall issue written procedures for the care and handling of direct access storage media which draw upon the recommendations of the manufacturers.

(2) External labels for diskettes or removable disks used when processing or temporarily storing permanent or unscheduled records shall include the following information: name of the organizational unit responsible for the records, descriptive title of the contents, dates of creation, security classification, if applicable, and identification of the software and hardware used.

[55 FR 19218, May 8, 1990. Redesignated at 60 FR 44641, Aug. 28, 1995]

§ 1234.32 Retention and disposition of electronic records.

Agencies shall establish policies and procedures to ensure that electronic records and their documentation are retained as long as needed by the Government. These retention procedures shall include provisions for:

(a) Scheduling the disposition of all electronic records, as well as related documentation and indexes, by applying General Records Schedules (particularly GRS 20 or GRS 23) as appropriate or submitting an SF 115, Request for Records Disposition Authority, to NARA (see part 1228 of this chapter). The information in electronic information systems, including those operated for the Government by a contractor, shall be scheduled as soon as possible but no later than one year after implementation of the system.

(b) Transferring a copy of the electronic records and any related documentation and indexes to the National Archives at the time specified in the records disposition schedule in accordance with instructions found in § 1228.188 of this chapter. Transfer may take place at an earlier date if convenient for both the agency and the National Archives and Records Administration.

(c) Establishing procedures for regular recopying, reformatting, and other necessary maintenance to ensure the retention and usability of electronic records throughout their authorized life cycle (see § 1234.28).

(d) Electronic mail records may not be deleted or otherwise disposed of without prior disposition authority from NARA (44 U.S.C. 3303a). This applies to the original version of the record that is sent or received on the electronic mail system and any copies that have been transferred to a recordkeeping system. See 36 CFR part 1228 for records disposition requirements.

(1) *Disposition of records on the electronic mail system.* When an agency has taken the necessary steps to retain the record in a recordkeeping system, the identical version that remains on the user's screen or in the user's mailbox has no continuing value. Therefore, NARA has authorized deletion of the version of the record on the electronic mail system under General Records Schedule 20, Item 14, after the record has been preserved in a recordkeeping system along with all appropriate transmission data.

(2) *Records in recordkeeping systems.* The disposition of electronic mail records that have been transferred to an appropriate recordkeeping system is governed by the records schedule or schedules that control the records in that system. If the records in the system are not scheduled, the agency shall follow the procedures at 36 CFR part 1228.

[55 FR 19218, May 8, 1990. Redesignated and amended at 60 FR 44641, 44642, Aug. 28, 1995]

§ 1234.34 Destruction of electronic records.

Electronic records may be destroyed only in accordance with a records disposition schedule approved by the Archivist of the United States, including General Records Schedules. At a minimum each agency shall ensure that:

(a) Electronic records scheduled for destruction are disposed of in a manner that ensures protection of any sensitive, proprietary, or national security information.

(b) Magnetic recording media previously used for electronic records containing sensitive, proprietary, or national security information are not reused if the previously recorded information can be compromised by reuse in any way.

(c) Agencies shall establish and implement procedures that specifically address the destruction of electronic records generated by individuals employing electronic mail.

[55 FR 19218, May 8, 1990. Redesignated and amended at 60 FR 44641, 44642, Aug. 28, 1995]

PART 1236—MANAGEMENT OF VITAL RECORDS

Subpart A—General

Sec.
1236.10 Purpose.
1236.12 Authority.
1236.14 Definitions.

Subpart B—Vital Records

1236.20 Vital records program objectives.
1236.22 Identification of vital records.
1236.24 Use of vital records and copies of vital records.
1236.26 Protection of vital records.
1236.28 Disposition of original vital records.

AUTHORITY: 44 U.S.C. 2104(a), 2904(a), 3101; E. O. 12656, 53 FR 47491, 3 CFR, 1988 Comp., p. 585.

SOURCE: 60 FR 29990, June 7, 1995, unless otherwise noted.

Subpart A—General

§ 1236.10 Purpose.

This part prescribes policies and procedures for establishing a program for the identification and protection of vital records, those records needed by agencies for continuity of operations before, during, and after emergencies, and those records needed to protect the legal and financial rights of the Government and persons affected by Government activities. The records may be maintained on a variety of media including paper, magnetic tape or disk, photographic film, and microfilm. The management of vital records is part of an agency's continuity of operations plan designed to meet emergency management responsibilities.

§ 1236.12 Authority.

Heads of agencies are responsible for the vital records program under the following authorities:

(a) To make and preserve records containing adequate and proper documentation of the agency's organization, functions, policies, procedures, decisions, and essential transactions, and to furnish information to protect the legal and financial rights of the Government and of persons directly affected by the agency's activities (44 U.S.C. 3101).

(b) To perform national security emergency preparedness functions and activities (Executive Order 12656).

§ 1236.14 Definitions.

Basic records management terms are defined in 36 CFR 1220.14. As used in part 1236:

Contingency planning means instituting policies and procedures to mitigate the effects of potential emergencies or disasters on an agency's operations and records. Contingency planning is part of the continuity of operations planning required under Federal Preparedness Circulars and other guidance issued by the Federal Emergency Management Agency (FEMA) and Executive Order 12656.

Cycle means the periodic removal of obsolete copies of vital records and their replacement with copies of current vital records. This may occur daily, weekly, quarterly, annually or at other designated intervals.

Disaster means an unexpected occurrence inflicting widespread destruction and distress and having long-term adverse effects on agency operations. Each agency defines what a long-term adverse effect is in relation to its most critical program activities.

Emergency means a situation or an occurrence of a serious nature, developing suddenly and unexpectedly, and demanding immediate action. This is generally of short duration, for example, an interruption of normal agency operations for a week or less. It may involve electrical failure or minor flooding caused by broken pipes.

Emergency operating records are that type of vital records essential to the continued functioning or reconstitution of an organization during and after an emergency. Included are emergency plans and directive(s), orders of succession, delegations of authority, staffing assignments, selected program records needed to continue the most critical agency operations, as well as related policy or procedural records that assist agency staff in conducting operations under emergency conditions and for resuming normal operations after an emergency.

Legal and financial rights records are that type of vital records essential to protect the legal and financial rights of the Government and of the individuals directly affected by its activities. Examples include accounts receivable records, social security records, payroll records, retirement records, and insurance records. These records were formerly defined as ''rights-and-interests'' records.

National security emergency means any occurrence, including natural disaster, military attack, technological emergency, or other emergency, that seriously degrades or threatens the national security of the United States, as defined in Executive Order 12656.

Off-site storage means a facility other than an agency's normal place of business where vital records are stored for protection. This is to ensure that the vital records are not subject to damage or destruction from an emergency or disaster affecting an agency's normal place of business.

Vital records mean essential agency records that are needed to meet operational responsibilities under national security emergencies or other emergency or disaster conditions (emergency operating records) or to protect the legal and financial rights of the Government and those affected by Government activities (legal and financial rights records).

Vital records program means the policies, plans, and procedures developed and implemented and the resources needed to identify, use, and protect the essential records needed to meet operational responsibilities under national security emergencies or other emergency or disaster conditions or to protect the Government's rights or those of its citizens. This is a program element of an agency's emergency management function.

Subpart B—Vital Records

§ 1236.20 Vital records program objectives.

The vital records program is conducted to identify and protect those records that specify how an agency will operate in case of emergency or disaster, those records vital to the continued operations of the agency during and after an emergency or disaster, and records needed to protect the legal and financial rights of the Government and of the persons affected by its actions. An agency identifies vital records in the course of contingency planning activities carried out in the context of the emergency management function. In carrying out the vital records program agencies shall:

(a) Specify agency staff responsibilities;

(b) Ensure that all concerned staff are appropriately informed about vital records;

(c) Ensure that the designation of vital records is current and complete; and

(d) Ensure that vital records and copies of vital records are adequately protected, accessible, and immediately usable.

§ 1236.22 Identification of vital records.

Vital records include emergency plans and related records that specify how an agency is to respond to an emergency as well as those records that would be needed to continue operations and protect legal and financial rights. Agencies should consider the informational content of records series and electronic records systems when

identifying vital records. Only the most recent and complete source of the vital information needs to be treated as vital records.

§ 1236.24 Use of vital records and copies of vital records.

Agencies shall ensure that retrieval procedures for vital records require only routine effort to locate needed information, especially since individuals unfamiliar with the records may need to use them during an emergency or disaster. Agencies also shall ensure that all equipment needed to read vital records or copies of vital records will be available in case of emergency or disaster. For electronic records systems, agencies also shall ensure that system documentation adequate to operate the system and access the records will be available in case of emergency or disaster.

§ 1236.26 Protection of vital records.

Agencies shall take appropriate measures to ensure the survival of the vital records or copies of vital records in case of emergency or disaster. In the case of electronic records, this requirement is met if the information needed in the event of emergency or disaster is available in a copy made for general security purposes, even when the copy contains other information.

(a) *Duplication.* Computer backup tapes created in the normal course of system maintenance or other electronic copies that may be routinely created in the normal course of business may be used as the vital record copy. For hard copy records, agencies may choose to make microform copies. Standards for the creation, preservation and use of microforms are found in 36 CFR part 1230, Micrographic Records Management. The Computer Security Act of 1987 (40 U.S.C. 759, Pub. L. 100–235), OMB Circular A–130, and 36 CFR part 1234, Electronic Records Management, and 41 CFR part 201, subchapter B, Management and Use of Information and Records, specify protective measures and standards for electronic records.

(b) *Storage.* When agencies choose duplication as a protection method, the copy of the vital record stored off-site is normally a duplicate of the original record. Designating and using duplicate copies of original records as vital records facilitates destruction or deletion of obsolete duplicates when replaced by updated copies, whereas original vital records must be retained for the period specified in the agency records disposition schedule. The agency may store the original records off-site if protection of original signatures is necessary, or if it does not need to keep the original record at its normal place of business.

(c) *Storage considerations.* Agencies need to consider several factors when deciding where to store copies of vital records. Copies of emergency operating vital records need to be accessible in a very short period of time for use in the event of an emergency or disaster. Copies of legal and financial rights records may not be needed as quickly. In deciding where to store vital records copies, agencies shall treat records that have the properties of both categories, that is, emergency operating and legal and financial rights records, as emergency operating records.

(1) Under certain circumstances, Federal records centers (FRC's) may store copies of emergency operating vital records. FRC's will store small volumes of such records, but may not be able to provide storage for large collections or ones requiring constant recycling of the vital records, except under reimbursable agreement. Prior to preparing the records for shipment, the agency must contact the FRC to determine if the center can accommodate the storage requirements and return copies in an acceptable period of time.

(2) The off-site copy of legal and financial rights vital records may be stored at an off-site agency location or, in accordance with § 1228.156 of this chapter, at an FRC.

(3) When using an FRC for storing vital records that are duplicate copies of original records, the agency must specify on the SF 135, Records Transmittal and Receipt, that they are vital records (duplicate copies) and the medium on which they are maintained. The agency shall also periodically cycle (update) them by removing obsolete items and replacing them with the most recent version, when necessary.

(4) Agencies that transfer permanent, original vital records maintained on electronic or microform media to the custody of the National Archives may designate such records as their off-site copy. That designation may remain in effect until the information in such transferred records is superseded or becomes obsolete.

§ 1236.28 Disposition of original vital records.

The disposition of original vital records is governed by records schedules approved by NARA (see part 1228, Disposition of Federal Records). Original records that are not scheduled may not be destroyed or deleted.

PART 1238—PROGRAM ASSISTANCE

Sec.

1238.1 Scope of part.
1238.2 Requests for assistance.

AUTHORITY: 44 U.S.C. 2904 and 3101.

§ 1238.1 Scope of part.

The National Archives and Records Administration publishes handbooks, conducts workshops and other training sessions, and furnishes information and guidance to Federal agencies about the creation of records, their maintenance and use, and their disposition.

[50 FR 26940, June 28, 1985]

§ 1238.2 Requests for assistance.

Agencies desiring information or assistance related to any of the areas covered by subchapter B should contact the Agency Services Division, Office of Records Administration, National Archives (NIA), Washington, DC 20408. Agency field organizations may contact the director of the appropriate Federal records center regarding records in or scheduled for transfer to the records center, or the director of the appropriate regional archives regarding records in or scheduled for transfer to the regional archives.

[57 FR 19807, May 8, 1992]

SUBCHAPTER C—PUBLIC AVAILABILITY AND USE

PART 1250—PUBLIC AVAILABILITY OF NARA ADMINISTRATIVE RECORDS AND INFORMATIONAL MATERIALS

Sec.
1250.1 Scope of part.

Subpart A—General Provisions

1250.10 Purpose.
1250.12 Availability of records.
1250.14 Applying exemptions.
1250.16 Records of other agencies.

Subpart B—Publication of General Agency Information and Rules in the Federal Register

1250.20 Published information and rules.

Subpart C—Availability of Orders, Regulations, and Manuals

1250.30 General.
1250.32 Available materials
1250.34 Index.
1250.36 Public inspection and copying.

Subpart D—Fees

1250.37 Definitions.
1250.38 Search fees.
1250.39 Review fees.
1250.40 Reproduction fees.
1250.41 Other fees.
1250.42 Fees applicable to categories of requesters.
1250.43 Prepayment of fees.
1250.44 Waiver or reduction of fees.
1250.45 Form of payment.
1250.46 Payment collection.

Subpart E—Described Records

1250.50 General.
1250.52 Procedures for making records available.
1250.54 Submission of requests for described records.
1250.56 Response to initial request.
1250.58 Appeal within NARA.
1250.60 Extention of time limits.

Subpart F—Exemptions

1250.70 Categories of records exempt from disclosure under FOIA.

Subpart G—Predisclosure Notification Procedures for Commercial Information

1250.75 Predisclosure notification procedures for commercial information.

Subpart H—Subpoenas and Other Legal Demands for NARA Administrative Records

1250.80 Service of subpoena and other legal demands for NARA administrative records.

AUTHORITY: 44 U.S.C. 2104(a); 5 U.S.C. 552; E.O. 12600, 52 FR 23781, 3 CFR, 1987 Comp., p. 235.

SOURCE: 50 FR 27202, July 1, 1985, unless otherwise noted.

§ 1250.1 Scope of part.

This part sets forth policies and procedures concerning the availability to the public of all records and informational materials generated, developed, or held by NARA with respect to:

(a) NARA organization and functions and regulations of general applicability;

(b) NARA final orders and staff manuals; and

(c) Operational and other appropriate agency records.

This part also covers exemptions from disclosure of these records; procedures for the guidance of the public in inspecting and obtaining copies of NARA records; and the service of a subpoena or other legal demand with respect to NARA administrative records.

Subpart A—General Provisions

§ 1250.10 Purpose.

This part implements the provisions of the Freedom of Information Act (''FOIA''), 5 U.S.C. 552, as amended. This part prescribes procedures by which the public may inspect and obtain copies of NARA records under FOIA.

§ 1250.12 Availability of records.

NARA administrative records are available to the greatest extent possible in keeping with the spirit and intent of the FOIA. Requesters should

address their requests to the office designated in § 1250.54. The person making the request need not have a particular interest in the subject matter, nor provide justification for the request except to the extent necessary to determine the requester's category for fee assessment purposes as explained in § 1250.42. The FOIA requirement that records be available to the public refers only to records in existence when the request is submitted. The Act does not require an agency to compile or create information or records in response to a FOIA request.

[52 FR 29519, Aug. 10, 1987]

§ 1250.14 Applying exemptions.

NARA may deny a request for a NARA record if the record falls within an exemption of FOIA as outlined in subpart E of this part. Except when a record is classified or when disclosure would violate any Federal law, the authority to withhold a record is permissive rather than mandatory. NARA will not withhold a record unless there is a compelling reason to do so. In the absence of a compelling reason, NARA will disclose a record although it otherwise is subject to exemption.

§ 1250.16 Records of other agencies.

(a) *Other agencies' records managed by NARA.* The availability of records of other agencies in the physical custody of NARA and records which have been accessioned into the National Archives of the United States and Federal Records Centers is governed by part 1254 of this chapter. (Availability of Records and Donated Historical Materials.)

(b) *Current records of other agencies.* If NARA receives a request to make available current records that are the primary responsibility of another agency, NARA shall refer the request to the agency concerned for appropriate action. NARA shall inform the requestor that NARA has forwarded the request to the responsible agency.

Subpart B—Publication of General Agency Information and Rules in the Federal Register

§ 1250.20 Published information and rules.

In accordance with 5 U.S.C. 552(a)(1), NARA publishes in the FEDERAL REGISTER, for the guidance of the public, the following general information concerning NARA:

(a) A description of its central and field organization and the established places at which, the employees from whom, and the methods whereby the public may obtain information, make submittals or requests, or obtain decisions;

(b) Statements of the general courses and methods by which functions are channeled and determined, including the nature and requirements of all formal and informal procedures available;

(c) Rules of procedure, descriptions of forms available or the places where forms may be obtained, and instructions on the scope and content of all papers, reports, and examinations;

(d) Substantive rules of general applicability adopted as authorized by law and statements of general policy or interpretations of general applicability formulated and adopted by NARA;

(e) Each amendment, revision, or repeal of the materials described in this section.

Subpart C—Availability of Orders, Regulations, and Manuals

§ 1250.30 General.

NARA makes available for public inspection and copying the materials described in paragraph (a)(2) of the FOIA (5 U.S.C. 552(a)(2)), which are listed in § 1250.32, and an Index of those materials as described in § 1250.34, at the National Archives Building located at 7th and Pennsylvania Avenue, NW., Washington, DC. Copying services are available at fees specified in § 1250.40.

[52 FR 29519, Aug. 10, 1987]

§1250.32 Available materials.

NARA materials available under this subpart C are as follows:

(a) NARA orders;

(b) Written statements of NARA policy that are not published in the FEDERAL REGISTER;

(c) Administrative staff manuals and instructions to staff affecting a member of the public unless these materials are promptly published and copies offered for sale.

§1250.34 Index.

NARA will maintain and make available for public inspection and copying current indexes regarding any matter issued, adopted, or promulgated after July 4, 1967, and described in §1250.32. NARA will publish quarterly and make available copies of each index or supplement thereto. The index will be maintained for public inspection by the Office of Management and Administration, National Archives (NA), Washington, DC 20408. The public may write to the Policy and Program Analysis Division, National Archives (NAA), Washington, DC 20408, to request a copy of the index.

[51 FR 23416, June 27, 1986, as amended at 57 FR 22430, May 28, 1992]

§1250.36 Public inspection and copying.

NARA will make records not subject to exemption available at the NARA facility where the records are located during normal working hours (see part 1253 of this chapter), or at an alternative NARA facility as mutually agreed upon by NARA and the requester. NARA will agree to show the originals or a copy of the originals if the originals are located at another NARA facility, make one copy available at a fee, or a combination of these alternatives.

Subpart D—Fees

SOURCE: 52 FR 29519, Aug. 10, 1987, unless otherwise noted.

§1250.37 Definitions.

Commercial-use requester means a requester seeking information for a use or purpose that furthers the commercial, trade, or profit interests of the requester or the person on whose behalf the request is made.

Educational-institution request means a request from a preschool, a public or private elementary or secondary school, an institution of undergraduate higher education, an institution of graduate higher education, an institution of professional education, or an institution of vocational education which operates a program or programs of scholarly research. The request must serve the scholarly research goals of the institution or school rather than the individual goals of the requester. A request from a student in furtherance of the completion of a course of instruction does not qualify as an educational institution request.

Freelance-journalist means an individual who qualifies as a representative of the news media because the individual can demonstrate a solid basis for expecting publication through a news organization, even though not actually in its employ. A publication contract would be the clearest proof of a solid basis, but the individual's past publication history may also be considered in demonstrating this solid basis.

News media representative means a person actively gathering news for an entity that is organized and operated to publish or broadcast news to the public. The term *news* means information that is about current events or that would be of current interest to the public. Examples of news media entities include television or radio stations broadcasting to the public at large, and publishers of periodicals (but only in those instances when they can qualify as disseminators of *news*) who make their products available for purchase or subscription by the general public.

Non-commercial scientific institution means an institution that is not operated on a basis that furthers the commercial, trade, or profit interests of any person or organization, and which is operated solely for the purpose of conducting scientific research the results of which are not intended to promote any particular product or industry.

Other requesters means any individual who is not a commercial-use requester, a representative of the news media, a

freelance-journalist, or one associated with an educational or non-commercial scientific institution whose research activities conform to the definition above. This term does not include requests from records subjects for records about themselves filed in NARA's systems of records; such requests are handled in accordance with 36 CFR part 1202.

§ 1250.38 Search fees.

(a) The search fee is $10 per hour or fraction thereof when clerical/administrative staff manually search for records responsive to a request, and $18 per hour or fraction thereof when NARA must use professional staff to manually search for the requested records because clerical/administrative staff would be unable to locate them. The search fee for computerized searches is the wage (plus 16 percent fringe benefits) of the computer operator per hour or fraction thereof plus the actual computer operating costs.

(b) NARA may charge for search time spent in trying to locate NARA records which are responsive to the request regardless of whether or not any responsive records are identified. NARA will not engage in line-by-line search when merely duplicating an entire document is feasible and would prove to be a less expensive and quicker method of complying with the request.

(c) When the search includes non-personnel expenditures to locate and identify requested information (e.g., transport or travel costs, etc.), the applicable fee is the direct cost to NARA.

(d) NARA will charge for the aggregate of all time spent in searching for documents responsive to a series of requests when NARA reasonably believes a requester or group of requesters is dividing a request into a series of requests to evade assessment of applicable fees.

§ 1250.39 Review fees.

(a) NARA will not charge review fees for time spent resolving general legal or policy issues regarding the application of exemptions.

(b) The review fee is $24 per hour or fraction thereof, for time spent in activities set forth in paragraphs (d)(1), (d)(2), and (d)(3) of this section.

(c) NARA will charge only commercial-use requesters review fees.

(d) NARA may charge for the time spent engaged in the following activities to determine ''review time'' subject to review fees:

(1) Time spent examining all documents that are responsive to a request to determine whether any portion of any document is exempt from mandatory disclosure regardless of whether any information is ultimately withheld.

(2) Time spent excising information and otherwise preparing records for release (except preparing the copies that will be made available to the requester).

(3) The aggregate of all time spent in reviewing documents to determine whether any portion of any document is permitted to be withheld when NARA reasonably believes that a requester or group of requesters is dividing a request into a series of requests to evade the assessment of applicable fees.

(e) A fee of $.20 per page will be charged for making working copies of pages from which information must be excised.

§ 1250.40 Reproduction fees.

(a) *Electrostatic reproductions*—(1) *Prepared by NARA staff.* Paper reproductions of NARA paper records made by NARA staff will be furnished for $.20 a page.

(2) *Self-service.* At NARA facilities with self-service electrostatic copiers, requesters may make reproductions of released documents for $.10 a page.

(b) *Reproductions from electromagnetic media.* Direct costs to NARA for staff time for programming, computer operations, and printouts or magnetic tape to reproduce the requested data will be charged requesters.

(c) *Other media.* The cost for reproduction of records from or to other media will be provided upon request. NARA will charge the direct costs to NARA of providing the reproduction.

§ 1250.41 Other fees.

(a) *Mailing costs.* Actual postage and shipping costs will be charged when the requester asks for special methods such as express mail.

(b) *Certification*. A fee of $2.00 will be charged for each certification.

(c) *Interest*. Interest charges on unpaid fees will be charged beginning on the 31st day after billing at the rate prescribed in 31 U.S.C. 3717, and will accrue from the date of the billing.

§1250.42 Fees applicable to categories of requesters.

(a) *NARA policy*. (1) NARA will assess fees on the basis of the category of the requester as defined in §1250.37. The initial request should include sufficient information for NARA to determine the category of the requester. If sufficient information is not provided for NARA to make a determination, NARA will seek clarification from the requester before assigning a requester to a specific category and before beginning to process the request. If a requester disagrees with a NARA category-of-requester determination, this determination may be appealed, following the procedures set forth in §1250.58.

(2) NARA will not assess fees otherwise chargeable if the aggregate of all applicable fees is less than $10.

(3) If NARA estimates that total applicable search and reproduction charges are likely to exceed $25, NARA will notify the requester of the estimated amount of fees, unless the requester has indicated in advance a willingness to pay fees as high as those anticipated. The requester will be offered the opportunity to confer with a NARA official with the object of reformulating the request to meet the requester's need at a lower cost.

(4) For those requests eligible for 2 hours free search time, NARA may begin charging for computerized search time once the cost of the search (including the operator time and the cost of operating the computer to process the request) equals the equivalent dollar amount of two hours of a manual search by a clerical/administrative employee.

(b) *Commercial-use requesters*. Commercial-use requesters, as defined in §1250.37, who make requests for reasonably described records will be assessed the following fees:

(1) Search fees as set forth in §1250.38;

(2) Review fees as set forth in §1250.39

(3) Reproduction fees as set forth in §1250.40; and

(4) Other fees as set forth in §1250.41, as applicable.

(c) *Educational and non-commercial scientific institution requesters*. When NARA receives a request from a qualified educational institution or a non-commercial scientific institution requester, as defined in §1250.37, for reasonably described records, NARA will assess:

(1) Reproduction costs as set forth in §1250.40, except the first 100 pages or their equivalent will be provided free; and

(2) Other costs as set forth in §1250.41, if applicable. NARA will not charge search or review fees.

(d) *Requesters who are qualified representatives of the news media or qualified freelance-journalists*. When NARA receives a request from a qualified representative of the news media or freelance-journalist, as defined in §1250.37, for reasonably described records, NARA will assess reproduction fees as set forth in §1250.40, except the first 100 pages or their equivalent will be provided free. NARA will not charge search or review fees.

(e) *Requests from other requesters*. When NARA receives a request from an individual defined as ''other requesters'' in §1250.37 for reasonably described records, NARA will assess:

(1) Search fees as set forth in §1250.38 for any search time in excess of two hours of manual search or its computerized search equivalent;

(2) Reproduction fees as set forth in §1250.40, as applicable, except the first 100 pages or their equivalent will be provided free; and

(3) Other fees as set forth in §1250.41, if applicable.

§1250.43 Prepayment of fees.

(a) NARA may require prepayment of all fees when:

(1) Applicable fees are likely to exceed $250, and

(i) The requester has no history of payment;

(ii) After notifying a requester who has a history of prompt payment of FOIA fees of the estimated fees, NARA does not receive satisfactory assurances of full payment: Or

(2) A requester has previously failed to pay a fee and interest charges within 30 days of the date of billing.

(b) The amount of the prepayment will be the anticipated fees for the current request, and if applicable, any previously assessed fees and any interest which have not been received by NARA.

§ 1250.44 Waiver or reduction of fees.

(a) Any request for waiver or reduction of a fee shall be included in the initial letter requesting access to NARA records under § 1250.54. The waiver or reduction request should explain how release of the requested information is likely to benefit the public by contributing significantly to the public understanding of the operations or activities of the government, and why the information is not primarily in the commercial interest of the requester.

(b) Documents shall be furnished without a fee or at a reduced fee if NARA determines that the information is likely to contribute significantly to public understanding of the operations or activities of the government and is not primarily in the commercial interest of the requester.

(c) If NARA denies a request for a waiver or reduction of a fee, the requester may appeal this denial, following the procedures set forth in § 1250.58.

§ 1250.45 Form of payment.

Requesters shall pay fees by check or money order payable to: ''National Archives and Records Administration'' and addressed to the official named by NARA in its correspondence.

§ 1250.46 Payment collection.

As provided for in the Debt Collection Act of 1982 (Pub. L. 97–365), NARA may employ collection agencies and may disclose information concerning nonpayment of fees to consumer reporting agencies when fees have not been paid within 31 days of billing.

Subpart E—Described Records

§ 1250.50 General.

(a) Except for records made available in accordance with subparts B and C of this part, NARA promptly will make records available to a requester when the request describes the records so as to enable a professional NARA employee to identify and locate the record(s) unless NARA invokes an exemption in accordance with subpart F of this part. NARA will consult with the requester, when necessary, to more specifically identify the requested record(s).

(b) Upon receipt of a request that does not reasonably describe the records requested, NARA may contact the requester to seek a more specific description. The 10-workday time limit set forth in § 1250.56 will not start until NARA receives a request reasonably describing the records.

[50 FR 27202, July 1, 1985, as amended at 52 FR 29521, Aug. 10, 1987]

§ 1250.52 Procedures for making records available.

This section sets forth initial procedures for making requested records available. These procedures do not apply to records of other agencies that have been transferred to NARA in accordance with 44 U.S.C. 2107 and 3103; in those cases, the procedures in part 1254 of this chapter govern.

§ 1250.54 Submission of requests for described records.

For records located in NARA, the requester shall submit a request in writing to the NARA FOIA Officer, National Archives (NAA), Washington, DC 20408. Requests shall include the words ''Freedom of Information Request'' prominently marked on both the face of the request letter and the envelope. The 10-workday time limit for agency decisions set forth in § 1250.56 begins with receipt of the request by the NARA office which maintains the requested records. A requester who has questions concerning a FOIA request may consult the NARA FOIA Officer.

§ 1250.56 Response to initial request.

NARA shall mail a response to an initial FOIA request within 10 workdays (that is, excluding Saturdays, Sundays, and legal Federal holidays) after receipt of a request by the NARA office that maintains the records. In unusual circumstances, NARA will inform the requester of the agency's need

to extend the time to respond to the request.

§1250.58 Appeal with NARA.

(a) A requester who receives a denial of access in whole or in part of a request or who receives a response that no responsive records were found, and who considers the latter response as adverse in nature, may appeal that decision or finding within NARA to the appropriate NARA FOIA Appeal Official. If the denial was signed by the Assistant Archivist for Management and Administration, the appeal shall be addressed to the Deputy Archivist of the United States, National Archives (ND), Washington, DC 20408. If the denial was signed by the Inspector General, the appeal shall be addressed to the Archivist of the United States, National Archives (N), Washington, DC 20408.

(b) The NARA FOIA Appeal Official must receive an appeal no later than 35 calendar days after the date of the NARA letter of denial.

(c) (1) The requester shall appeal in writing. The appeal letter shall include a brief statement of the reason(s):

(i) If an appeal of denial of access, why NARA should release the records, or

(ii) If an appeal of a requester category determination, why the requester should be considered to be a member of a different category, or

(iii) If an appeal of a denial of a fee reduction or waiver request that the requester is not otherwise entitled to, how disclosure of the information is likely to contribute significantly to public understanding of the operations or activities of government and why it is not a request primarily intended to benefit the commercial, trade, or profit interests of the requester, or

(iv) If no responsive records were found and the requester considers this to be an adverse determination, why the requester thinks that the search does not meet the requirements of the FOIA.

(2) The appeal letter shall include the words ''Freedom of Information Appeal'' on both the face of the appeal letter and the envelope, and the requester shall enclose with the appeal letter a copy of the initial request and denial.

(3) NARA has 20 workdays after receipt of an appeal to make a determination with respect to the appeal. The 20-workday time limit begins when the NARA FOIA Appeal Official receives the appeal.

(d) A requester who has received a denial of an appeal may seek judicial review of NARA's decision in the United States district court in the district in which the requester resides or has a principal place of business, or where the records are situated, or in the District of Columbia.

[50 FR 27202, July 1, 1985, as amended at 51 FR 23416, June 27, 1986; 52 FR 29521, Aug. 10, 1987; 54 FR 32068, Aug. 4, 1989; 57 FR 22430, May 28, 1992]

§1250.60 Extension of time limits.

In unusual circumstances the NARA FOIA Appeal Official may extend the time limits prescribed in §1250.58. If necessary, more than one extension of time may be taken. However, the total extension of time shall not exceed 10 workdays with respect to a particular request. The extension may be divided between the initial and appeal stages or within a single stage. NARA shall provide a written notice to the requester of any extension of time limits.

[50 FR 27197, July 1, 1985, as amended at 54 FR 32068, Aug. 4, 1989]

Subpart F—Exemptions

§1250.70 Categories of records exempt from disclosure under the FOIA.

(a) 5 U.S.C. 552(b) provides that the requirements of the FOIA do not apply to matters that are:

(1) Specifically authorized under criteria established by an Executive order to be kept secret in the interest of national defence or foreign policy and that are, in fact, properly classified under the Executive order;

(2) Related solely to the internal personnel rules and practices of an agency;

(3) Specifically exempted from disclosure by statute, other than the Privacy Act, provided that the statute:

(i) Requires that the matters be withheld from the public in such a manner as to leave no discretion on the issue, or

(ii) Establishes particular criteria for withholding or refers to particular types of matters to be withheld;

(4) Trade secrets and commercial or financial information obtained from a person that are privileged or confidential;

(5) Interagency or intra-agency memorandums or letters which would not be available by law to a party other than an agency in litigation with the agency;

(6) Personnel and medical files and similar files the disclosure of which would constitute a clearly unwarranted invasion of personal privacy;

(7) Records or information compiled for law enforcement purposes, but only to the extent that the production of such law enforcement records or information:

(i) Could reasonably be expected to interfere with enforcement proceedings:

(ii) Would deprive a person of a right to a fair trial or an impartial adjudication;

(iii) Could reasonably be expected to constitute an unwarranted invasion of personal privacy;

(iv) Could reasonably be expected to disclose the identity of a confidential source, including a State, local or foreign agency or authority or any private institution which furnished information on a confidential basis, and, in the case of a record or information compiled by a criminal law enforcement authority in the course of a criminal investigation, or by an agency conducting lawful national security intelligence investigation, information furnished by a confidential source;

(v) Would disclose techniques and procedures for law enforcement investigations or prosecutions, or would disclose guidelines for law enforcement investigations or prosecutions if such disclosure could reasonably be expected to risk circumvention of the law; or

(vi) Could reasonably be expected to endanger the life or physical safety of any individual.

(8) Contained in or related to examination, operating, or condition reports prepared by, on behalf of, or for the use of an agency responsible for the regulation or supervision of financial institutions; and

(9) Geological and geophysical information and data, including maps, concerning wells.

(b) NARA will provide any reasonably segregable portion of a record to a requester after deletion of the portions that are exempt under this section.

(c) NARA will invoke no exemption under this section if the requested records would be available under the Privacy Act of 1974 and NARA implementing regulations in part 1202 of this chapter, or if disclosure would cause no demonstrable harm to any public or private interest.

[50 FR 27202, July 1, 1985, as amended at 52 FR 29521, Aug. 10, 1987]

Subpart G—Predisclosure Notification Procedures for Commercial Information

§ 1250.75 Predisclosure notification procedures for commercial information.

(a) *General.* Commercial information provided to NARA shall not be disclosed to the public except in accordance with this subpart.

(b) *Definitions.*

Potentially confidential commercial information means records provided to NARA by a submitter that may contain material exempt from release under 5 U.S.C. 552(b)(4) because disclosure could reasonably be expected to cause the submitter substantial competitive harm.

Submitter means any person or entity providing potentially confidential commercial information to an agency. The term *submitter* includes, but is not limited to, corporations, state governments, and foreign governments.

(c) *Designation of potentially confidential commercial information.* Submitters of commercial information may designate the information as commercially confidential. The designation must:

(1) Be made by the submitter when the information is submitted to NARA or within 30 workdays thereafter;

(2) Specify precisely which information is claimed as commercially confidential;

(3) Be made in good faith;

(4) Be supported by a certification by the submitter that the information has not been published or previously officially disclosed to the public.

(d) *Notice of receipt of a request to release information.* (1) NARA shall give the submitter prompt written notice of receipt of a FOIA request for the submitter's potentially confidential commercial information when:

(i) The submitter, in good faith, has designated the material as commercially confidential in accordance with paragraph (c) of this section; and

(ii) The FOIA request is received within 10 years of the date of submission.

(2) The written notice of receipt of an FOIA request shall either describe the potentially confidential commercial information requested, or provide copies of the records containing the information. The notice shall be mailed to the last known address of the submitter.

(3) When notice is given to a submitter pursuant to this section, NARA shall inform the requester that:

(i) The notice has been sent to the submitter;

(ii) That NARA's response to the request may be delayed beyond the limitations specified in 5 U.S.C. 552(a)(6)(A) and (B) to allow for time to notify the submitter, and to consider any response; and

(iii) That the delay may be considered a denial of access to records and the requester may seek judicial review. However, the requester shall be invited to agree to a voluntary extension of time so that NARA may consider any claims of confidentiality by the submitter.

(e) *Opportunity to object to disclosure.* (1) Through the notice described in paragraph (d) of this section, NARA shall afford a submitter a reasonable amount of time to provide NARA:

(i) A detailed statement of any objections to disclosure. The statement shall specify which information is claimed to be of a confidential commercial nature, and shall specify all grounds for withholding any of the information under the exemptions of the FOIA. If exemption (b)(4) of the FOIA is cited, the statement shall explain how the release of the information can be reasonably expected to cause substantial competitive harm to the submitter; and

(ii) Certification that the information has not been published or previously disclosed to the public.

(2) The statement provided pursuant to this subsection may itself be subject to disclosure under the FOIA

(f) *Notice of intent to disclose.* (1) NARA shall consider any good faith designations of commercial confidentiality made when the information was initially submitted to NARA, and the submitter's timely objections and specific grounds for nondisclosure received in response to the notice of receipt of a request prior to determining whether to disclose the information in question.

(2) When NARA decides to disclose commercial information over the objections of a submitter, whether in response to a request to release or as the result of an appeal of a denial of access, NARA shall provide the submitter a written notice which:

(i) States the reasons why the submitter's objections were not sustained;

(ii) Describes or contains a copy of the information to be disclosed; and

(iii) Specifies a disclosure date. NARA shall inform the submitter that disclosure will be made on the specified disclosure date, unless barred by court order.

(3) NARA shall inform the requester that such notice has been given to the submitter and of the proposed disclosure date.

(4) When NARA and the submitter are in agreement concerning disclosure, disclosure shall take place as soon as possible.

(5) The notice of receipt of a request shall serve as the notice of intent to disclose when the submitter fails to respond to the initial notice within a reasonable period of time.

(g) *Notice of lawsuit.* NARA will promptly inform the requester and the submitter of any law suit filed by the other concerning possible disclosure.

(h) *Exceptions to notice requirement.* The notice requirements of this section do not apply when:

(1) NARA determines that the information should not be disclosed in accordance with one or more FOIA exemptions;

(2) The information has been published or officially made available to the public;

(3) Disclosure of the information is required by law (other than 5 U.S.C. 552); or

(4) NARA has no substantial reason to believe that disclosure would result in competitive harm.

[54 FR 32068, Aug. 4, 1989]

Subpart H—Subpoenas or Other Legal Demands for NARA Administrative Records

§ 1250.80 Service of subpoena or other legal demand for NARA administrative records.

(a) A subpoena duces tecum or other legal demand for the production of NARA administrative records should be addressed to the Director of the Legal Services Staff, National Archives (NXL), Washington, DC 20408, with respect to NARA records.

(b) The Archivist of the United States and the Director of the Legal Services Staff are the only NARA employees authorized to accept, on behalf of NARA, service of a subpoena duces tecum or other legal demands for NARA administrative records.

(c) Regulations concerning service of a subpoena or other legal demand for records accessioned into the National Archives of the United States, records of other agencies in the custody of the Federal records centers, and donated historical materials are located at part 1254 of this chapter.

[50 FR 27202, July 1, 1985. Redesignated at 54 FR 32068, Aug. 4, 1989]

PART 1252—PUBLIC USE OF RECORDS, DONATED HISTORICAL MATERIALS, AND FACILITIES; GENERAL

Sec.
1252.1 Scope.
1252.2 Definitions.

AUTHORITY: 44 U.S.C. 2104(a).

§ 1252.1 Scope.

This subchapter prescribes rules and procedures governing the public use of records and donated historical materials in the custody of the National Archives and Records Administration (NARA). Except for part 1250, this subchapter does not apply to current operating records of NARA. This subchapter also prescribes rules and procedures governing the public use of certain NARA facilities.

[59 FR 29191, June 6, 1994]

§ 1252.2 Definitions.

The following definitions are established for terms used in this subchapter.

Archives or archival records mean Federal records that have been determined by NARA to have sufficient historical or other value to warrant their continued preservation by the U.S. Government, and have been transferred to the National Archives of the United States.

Director means the head of a Presidential library, the head of a Presidential Materials Staff, the head of a NARA division, branch, archival center, or unit responsible for servicing archival records, the head of a regional archives, or the head of a Federal records center.

Documents mean, for purposes of part 1254 of this chapter, archives, FRC records, donated historical materials, Nixon Presidential historical materials, and Presidential records, regardless of the media on which they are contained. Document form may include paper, microforms, photographs, sound recordings, motion pictures, maps, drawings, and electronic files.

Donated historical materials means books, correspondence, documents, papers, pamphlets, magnetic tapes, pictures, photographs, plats, maps, films, motion pictures, sound recordings, and other documental media having historical or commemorative value accepted by NARA from a source other than an agency of the U.S. Government.

Federal records center includes the Washington National Records Center, the National Personnel Records Center, and the Federal records centers listed in § 1253.6 of this chapter.

Federal records center records (FRC records) mean records which, pending their transfer to the National Archives of the United States or their disposition in any other manner authorized by law, have been transferred to a Federal records center operated by NARA.

Nixon Presidential historical materials has the meaning specified in §1275.16 of this chapter.

Presidential records has the meaning specified in §1270.14 of this chapter.

Records mean records or microfilm copies of records transferred to NARA under 44 U.S.C. 2107 and 3103; namely, archives and Federal records center records as the terms are defined in §1252.2. The term *records* does not include current operating records of NARA, the public availability of which is governed by part 1250 of this chapter, or donated historical materials as defined in this section.

Researcher means a person who has been granted access to original documents or copies of documents.

[33 FR 4885, Mar. 22, 1968, 42 FR 13022, Mar. 8, 1977, and 49 FR 33253, Aug. 22, 1984. Redesignated and amended at 50 FR 15723, 15726, Apr. 19, 1985; 59 FR 29191, June 6, 1994]

PART 1253—LOCATION OF RECORDS AND HOURS OF USE

Sec.

1253.1 National Archives Building.
1253.2 National Archives at College Park.
1253.3 Presidential libraries.
1253.4 Washington National Records Center.
1253.5 National Personnel Records Center.
1253.6 Federal Records Centers.
1253.7 Regional Archives System.

AUTHORITY: 44 U.S.C. 2104(a).

§1253.1 National Archives Building.

The National Archives Building is located at Seventh Street and Pennsylvania Avenue, NW., Washington, DC 20408. Hours: For the Central Research Room and Microfilm Research Room, 8:45 a.m. to 5 p.m., Monday and Wednesday; 8:45 a.m. to 9 p.m., Tuesday, Thursday, and Friday; 8:45 a.m. to 4:45 p.m. on Saturday. For other research rooms, 8:45 a.m. to 5 p.m., Monday through Friday.

[59 FR 6901, Feb. 14, 1994]

§1253.2 National Archives at College Park.

The National Archives at College Park is located at 8601 Adelphi Road, College Park, MD 20740–6001. Research complex hours are 8:45 a.m. to 5 p.m., Monday and Wednesday; 8:45 a.m. to 9 p.m., Tuesday, Thursday, and Friday; and 8:45 a.m. to 4:45 p.m. Saturday.

[59 FR 6900, Feb. 14, 1994]

§1253.3 Presidential libraries.

Some of the Presidential Libraries may offer extended research room hours on selected evenings and Saturdays; museums within the Libraries offer Saturday and Sunday hours. More specific information on extended hours is available from each Presidential Library. The hours listed in this section are the minimum hours that each Presidential Library is normally open.

(a) Herbert Hoover Library, 210 Parkside Dr., West Branch, IA. Mailing address: PO Box 488, West Branch, IA 52358–0488. Hours: 9 a.m. to 5 p.m., Monday through Friday.

(b) Franklin D. Roosevelt Library, 511 Albany Post Rd., Hyde Park, NY 12538–1999. Hours: 8:45 a.m. to 5 p.m., Monday through Friday.

(c) Harry S. Truman Library, 500 W. US Hwy 24, Independence, MO 64050–1798. Hours: 8:45 a.m. to 4:45 p.m., Monday through Friday.

(d) Dwight D. Eisenhower Library, 200 SE Fourth Street, Abilene, KS 67410–2900. Hours: 9 a.m. to 4:45 p.m., Monday through Friday.

(e) John Fitzgerald Kennedy Library, Columbia Point, Boston, MA 02125. Hours: 8 a.m. to 4:30 p.m., Monday through Friday.

(f) Lyndon Baines Johnson Library, 2313 Red River St., Austin, TX 78705–5702. Hours: 9 a.m. to 5 p.m., Monday through Friday.

(g) Gerald R. Ford Library, 1000 Beal Avenue, Ann Arbor, MI 48109–2114. Hours: 8:45 a.m. to 4:45 p.m., Monday through Friday.

(h) Gerald R. Ford Museum, 303 Pearl St. NW, Grand Rapids MI 49504–5353.

Hours: 9 a.m. to 4:45 p.m., Sunday through Saturday.

(i) Jimmy Carter Library, 1 Copenhill Ave NE, Atlanta, GA 30307–1406. Hours: 9 a.m. to 4:45 p.m., Monday through Friday.

(j) Ronald Reagan Library, 40 Presidential Dr, Simi Valley, CA 93065–0666. Hours: 9 a.m. to 4:30 p.m., Monday through Friday.

[46 FR 37652, July 22, 1981. Redesignated at 50 FR 15723, Apr. 19, 1985, and amended at 52 FR 23821, June 25, 1987; 57 FR 21742, May 22, 1992; 60 FR 40416, Aug. 8, 1995; 61 FR 390, Jan. 5, 1996]

§ 1253.4 Washington National Records Center.

Washington National Records Center, 4205 Suitland Road, Suitland, MD. Mailing address: Washington National Records Center, 4205 Suitland Road, Washington, DC 20409–0002. Hours: 8:30 a.m. to 4 p.m., Monday through Friday. From May 6, 1996, through August 30, 1996, appointments may be made to use archival records at the Center by calling the Suitland Reference Branch at (301) 457–7190.

[61 FR 14972, Apr. 4, 1996]

§ 1253.5 National Personnel Records Center.

(a) Military Personnel Records, National Personnel Records Center, 9700 Page Ave., St. Louis, MO 63132–5100. Hours: 7:30 a.m. to 4 p.m., Monday through Friday.

(b) Civilian Personnel Records, National Personnel Records Center, 111 Winnebago St., St. Louis, MO 63118–4199. Hours: 7:30 a.m. to 4 p.m., Monday through Friday.

[60 FR 40417, Aug. 8, 1995]

§ 1253.6 Federal Records Centers.

(a) 380 Trapelo Rd., Waltham, MA 02154–6399. Hours: 8 a.m. to 4 p.m., Monday through Friday.

(b) 100 Dan Fox Dr., Pittsfield, MA 01201–8230. Hours: 7:30 a.m. to 4 p.m., Monday through Friday.

(c) Military Ocean Terminal Bldg. 22, Bayonne, NJ 07002–5388. Hours: 7:30 a.m. to 4 p.m., Monday through Friday.

(d) 14700 Townsend Rd., Philadelphia, PA 19154. Hours: 7:30 a.m. to 4 p.m., Monday through Friday.

(e) 1557 St. Joseph Ave., East Point, GA 30344–2593. Hours: 8 a.m. to 4 p.m., Monday through Friday.

(f) 3150 Springboro Rd., Dayton, OH 45439–1883. Hours: 7:30 a.m. to 4 p.m., Monday through Friday.

(g) 7358 S. Pulaski Rd., Chicago, IL 60629–5898. Hours: 8 a.m. to 4 p.m., Monday through Friday.

(h) 2312 E. Bannister Rd., Kansas City, MO 64131–3060. Hours: 8 a.m. to 4 p.m., Monday through Friday.

(i) 501 W. Felix St., Bldg. 1, Dock 1, Fort Worth, TX. Mailing Address: PO Box 6216, Fort Worth, TX 76115–6216. Hours: 8 a.m. to 4 p.m., Monday through Friday.

(j) Denver Federal Center Bldg. 48, Denver, CO. Mailing Address: PO Box 25307, Denver, CO 80225–0307. Hours: 7:30 a.m. to 4 p.m., Monday through Friday.

(k) 1000 Commodore Dr., San Bruno, CA 94066–2350. Hours: 7:30 a.m. to 3:30 p.m., Monday through Friday.

(l) 2400 Avila Rd., 1st Floor East, Laguna Niguel, CA. Mailing Address: PO Box 6719, Laguna Niguel, CA 92607–6719. Hours: 8 a.m. to 4:30 p.m., Monday through Friday.

(m) 6125 Sand Point Way NE, Seattle, WA 98115–7999. Hours: 8 a.m. to 4 p.m., Monday through Friday.

[60 FR 40417, Aug. 8, 1995, as amended at 61 FR 390, Jan. 5, 1996]

§ 1253.7 Regional Archives System.

Some of the Regional Archives may offer extended research room hours on selected evenings and Saturdays. More specific information on extended hours is available from each Regional Archives. The hours listed in this section are the minimum hours that each Regional Archives is normally open.

(a) National Archives—New England Region, 380 Trapelo Rd., Waltham, MA 02154–6399. Hours: 8 a.m. to 4 p.m., Monday through Friday. Telephone: (617) 647–8100.

(b) National Archives—Pittsfield Region, 100 Dan Fox Dr., Pittsfield, MA 01201–8230. Hours: 9 a.m. to 3:30 p.m., Monday through Friday. Telephone: (413) 445–8458.

(c) National Archives—Northeast Region, 201 Varick St., New York, NY 10014–4811. Hours: 8 a.m. to 4 p.m., Monday through Friday. Telephone: (212) 337–1300.

(d) National Archives—Mid-Atlantic Region, 900 Market St. Room 1350, Philadelphia, PA 19107–4292. Hours: 8

a.m. to 4 p.m., Monday through Friday. Telephone: (215) 597–3000.

(e) National Archives—Southeast Region, 1557 St. Joseph Ave., East Point, GA 30344–2593. Hours: 8 a.m. to 4 p.m., Monday through Friday. Telephone: (404) 763–7477.

(f) National Archives—Great Lakes Region, 7358 S. Pulaski Rd., Chicago, IL 60629–5898. Hours: 8 a.m. to 4 p.m., Monday through Friday. Telephone: (312) 353–0162.

(g) National Archives—Central Plains Region, 2312 E. Bannister Rd., Kansas City, MO 64131–3060. Hours: 8 a.m. to 4 p.m., Monday through Friday. Telephone: (816) 926–6934.

(h) National Archives—Southwest Region, 501 West Felix St., Bldg. 1, Dock 1, Fort Worth, TX. Mailing address: PO Box 6216, Fort Worth, TX 76115–0216. Hours: 8 a.m. to 4 p.m., Monday through Friday. Telephone: (817) 334–5525.

(i) National Archives—Rocky Mountain Region, Denver Federal Center, Bldg. 48, Denver, CO. Mailing address: PO Box 25307, Denver, CO 80225–0307. Hours: 8 a.m. to 4 p.m., Monday through Friday. Telephone: (303) 236–0817.

(j) National Archives—Pacific Southwest Region, 2400 Avila Rd., 1st Floor East, Laguna Niguel, CA. Mailing address: PO Box 6719, Laguna Niguel, CA 92607–6719. Hours: 8 a.m. to 4 p.m., Monday through Friday. Telephone: (714) 643–4241.

(k) National Archives—Pacific Sierra Region, 1000 Commodore Dr., San Bruno, CA 94066–2350. Hours: 8 a.m. to 4 p.m., Monday through Friday. Telephone: (415) 876–9009.

(l) National Archives—Pacific Northwest Region, 6125 Sand Point Way NE, Seattle, WA 98115–7999. Hours: 8 a.m. to 4 p.m., Monday through Friday. Telephone: (206) 526–6507.

(m) National Archives—Alaska Region, 654 W. 3rd Ave. Rm. 012, Anchorage, AK 99501–2145. Hours: 8 a.m. to 4 p.m., Monday through Friday. Telephone: (907) 271–2441.

[60 FR 40417, Aug. 8, 1995, as amended at 61 FR 390, Jan. 5, 1996]

PART 1254—AVAILABILITY OF RECORDS AND DONATED HISTORICAL MATERIALS

Subpart A—General

Sec.
1254.1 General provisions.
1254.2 Location of documents and hours of use.
1254.4 Research procedures.
1254.6 Researcher identification card.
1254.8 Subpoenas and other legal demands for records transferred to the National Archives and Records Administration.

Subpart B—Research Room Rules

1254.10 Registration.
1254.12 Researcher's responsibility for documents.
1254.14 Restrictions on using microfilm readers.
1254.16 Prevention of damage to documents.
1254.17 Keeping documents in order.
1254.18 Removal or mutilation of documents.
1254.20 Conduct.
1254.24 Locker use policy.
1254.26 Additional rules for use of certain research rooms in NARA facilities in the Washington, DC, area.
1254.27 Additional rules for use of certain research rooms in Federal records centers, regional archives, and Presidential libraries.

Subpart C—Access to Unclassified Records and Donated Historical Materials

1254.30 Archives.
1254.32 FRC records.
1254.34 Records of defunct agencies.
1254.35 Presidential records and Nixon Presidential materials.
1254.36 Donated historical materials.
1254.38 Freedom of Information Act requests.
1254.39 Requests for commercial information.

Subpart D—Access to National Security Information

1254.40 Access to national security information.
1254.44 Freedom of Information Act requests.
1254.46 Public requests for mandatory review of classified information under Executive Order 12356.
1254.48 Access by historical researchers and former Presidential appointees.
1254.50 Fees.

Subpart E—Information, Reproduction, and Authentication Services

1254.70 NARA copying services.
1254.71 Researcher use of the self-service card-operated copiers in the National Archives Building and the Washington National Records Center.
1254.72 Information about documents.
1254.74 Information from documents.
1254.76 Certification of copies.

Subpart F—Microfilming Archival Records

1254.90 General.
1254.92 Requests to microfilm records and donated historical materials.
1254.94 Criteria for granting the requests.
1254.96 Microfilm preparation.
1254.98 Equipment standards.
1254.100 Microfilming procedures.
1254.102 Rescinding permission.

AUTHORITY: 44 U.S.C. 2101–2118; 5 U.S.C. 552; and E.O. 12600, 52 FR 23781, 3 CFR, 1987 Comp., p. 235.

EDITORIAL NOTE: Nomenclature changes to part 1254 appear at 59 FR 29192, June 6, 1994.

Subpart A—General

§ 1254.1 General provisions.

(a) Researchers will normally use documents in designated research rooms only.

(b) Original documents will not normally be made available when microfilm copies or other alternative copies of the documents are available.

(c) Persons seeking information that is published and readily available will normally be referred to a public library.

(d) A director may require that researchers under the age of 16 years be accompanied by an adult researcher who agrees in writing to be present when the documents are used and to be responsible for compliance with the research room rules set forth in subpart B.

(e) Requests received in the normal course of reference service that do not specifically cite the Freedom of Information Act (5 U.S.C. 552) are not considered requests made under the act. Requests under the act must follow the procedure set forth in subpart C or subpart D of this part.

(f) Certain documents in the custody of NARA are available for exhibit, but are loaned only if the exhibitor meets exacting requirements regarding security, insurance coverage and humidity and temperature control of the exhibit area. These requirements may be obtained by writing to National Archives (NE), Washington, DC 20408.

[33 FR 4885, Mar. 22, 1968, as amended at 40 FR 7924, Feb. 24, 1975; 40 FR 28610, July 8, 1975; 42 FR 13022, Mar. 8, 1977. Redesignated and amended at 50 FR 15723, 15726, Apr. 19, 1985; 59 FR 29192, June 6, 1994]

§ 1254.2 Location of documents and hours of use.

(a) Researchers should identify the location of the documents needed. Inquiries may be addressed to the National Archives (NNRS), Washington, DC 20408.

(b) The locations and hours of operation (expressed in local time) of the depositories administered by the National Archives and Records Administration are shown in part 1253 of this chapter.

(c) Except for Federal holidays and other times specified by the Archivist or other authorized NARA officials, documents will be made available according to the schedule set forth in part 1253.

(d) In addition to the times specified in part 1253, documents may be made available at such other times as are authorized by a director.

[40 FR 7925, Feb. 24, 1975, as amended at 42 FR 13022, Mar. 8, 1977; 49 FR 33253, Aug. 22, 1984. Redesignated at 50 FR 15723, Apr. 19, 1985, and amended at 56 FR 2135, Jan. 22, 1991; 59 FR 29192, June 6, 1994]

§ 1254.4 Research procedures.

(a) Before applying to use documents, the researcher should ask the depository holding them whether the documents are available, whether there are enough documents to warrant a visit, or whether copies would be more practical.

(b) Researchers must apply in person at the depository that has custody of the documents.

(c) Researchers who wish to use documents not on microfilm in a depository where the microfilm research room is separate from textual research rooms, must complete a researcher identification application form and provide the information needed to decide which

documents can be made available. Researchers who wish to use only microfilm documents in a depository where the microfilm research room is not separate from textual research rooms must also comply with this paragraph. Applicants must show identification containing a picture or physical description of the applicant, e.g., a driver's license or school identification card. Exceptions to this requirement must be approved by the director. If applying for access to large quantities of documents or to documents that are especially fragile or valuable, the researcher may be required to furnish additional information about personal or professional qualifications or to furnish additional reasons why access is required. The collection of information contained in this paragraph has been approved by the Office of Management and Budget with the control number 3095–0016.

(d) A researcher will not be issued a researcher identification card if the branch chief or director of the relevant repository determines that:

(1) The documents which the researcher wishes to use are not in the legal custody of NARA; or

(2) The researcher is not interested in documents maintained by NARA but in information contained in secondary sources available at other institutions.

(e) Researchers using only microfilm, where the microfilm research room is separate from textual research rooms, are not issued an identification card but must register as described in §1254.10.

(f) In addition to the procedures in this section, researchers desiring to use archives that contain national security classified information must follow procedures in subpart D.

(g) The legal custody and control over access to records that are in the physical custody of the records centers, but not yet accessioned into the National Archives of the United States, remains with the agency. NARA informs researchers of the procedures required to obtain access.

[49 FR 33253, Aug. 22, 1984. Redesignated at 50 FR 15723, Apr. 19, 1985, and amended at 56 FR 2135, Jan. 22, 1991; 59 FR 29192, June 6, 1994]

§1254.6 Researcher identification card.

An identification card is issued to each person whose application is approved to use records other than microfilm. The card is valid at each depository (except the Presidential libraries which issue cards valid only at the issuing library) for 2 years, but it may be renewed upon application. Cards are not transferable and must be produced if requested by a guard or research room attendant.

[49 FR 33254, Aug. 22, 1984. Redesignated at 50 FR 15723, Apr. 19, 1985]

§1254.8 Subpoenas and other legal demands for records transferred to the National Archives and Records Administration.

(a) Access to records transferred to a Federal records center is controlled by the instructions and restrictions imposed on NARA by the Federal agency that transferred the records to the Federal records center. NARA will honor a subpoena duces tecum or other legal demand for the production of these records, to the extent required by law, if the transferring agency has imposed no restrictions. When the transferring agency has imposed restrictions, NARA will notify the authority issuing the subpoena or other legal demand that NARA must abide by the agency-imposed restrictions and will request the authority to pursue the matter directly with the transferring agency.

(b) The Archivist of the United States, the Director of the Legal Services Staff (NXL) or his designee, and the Director of the Federal Records Center in which the records are stored are the only NARA officials authorized to accept a subpoena or other legal demand for records transferred to a Federal records center.

(c) A subpoena duces tecum or other legal demand for the production of documents designated as *archives* or *donated historical materials* administered by NARA may be served only on the Archivist of the United States, the Director of the Legal Services Staff (NXL) or his designee, the appropriate

Assistant Archivist, Director of a Regional Archives, or Director of a Presidential Library.

[50 FR 15727, Apr. 19, 1985, as amended at 59 FR 29192, June 6, 1994]

Subpart B—Research Room Rules

§ 1254.10 Registration.

Researchers must register each day they enter a research facility, furnishing the information asked on the registration sheet and may be asked to provide additional personal identification.

[59 FR 29192, June 6, 1994]

§ 1254.12 Researcher's responsibility for documents.

(a) The research room attendant may limit the quantity of documents delivered to a researcher at one time. The researcher must sign for the documents received and may be required to show his/her researcher identification card. The researcher is responsible for the proper handling of and prevention of damage to all documents delivered to him/her until he/she returns them. When the researcher is finished using the documents, the documents must be returned to the research room attendant. The reference service slip that accompanies the documents to the research room must not be removed. If asked to do so, the researcher must return documents as much as 15 minutes before closing time. Before leaving a research room, even for a short time, a researcher must notify the research room attendant and place all documents in their proper containers.

(b) When microfilm is available on a self-service basis, research room attendants will assist researchers in identifying research sources on microfilm and provide information concerning how to locate and retrieve the roll(s) of film containing the information of interest. The researcher is responsible for retrieving and examining the roll(s). Unless a researcher requires assistance in learning how to operate microfilm reading equipment, the researcher is expected to install the microfilm on the reader. Unless otherwise permitted, a researcher is limited to one roll of microfilm at a time. After using each roll, the researcher is responsible for refiling the roll of microfilm in the location from which it was removed, unless instructed otherwise.

(c) Researchers are responsible for complying with provisions of the Copyright Act (Title 17, United States Code) which governs the making and use of electrostatic copies or other reproductions of copyrighted materials.

[59 FR 29192, June 6, 1994]

§ 1254.14 Restrictions on using microfilm readers.

(a) Use of the microfilm readers in the National Archives Building will be on a first-come, first-served basis. When other researchers are waiting to use a microfilm reader, a 3-hour limit may be placed on using a reader. After 3 hours of machine use, the researcher may sign the waiting list for an additional 3-hour period.

(b) The number of researchers in the microfilm research room in the National Archives Building will be limited, for fire safety reasons, to those researchers assigned a microfilm reader.

(c) Directors of regional archives may permit reservations for use of microfilm readers and set time limits on use to meet local circumstances. Rules for use will be posted in the research room.

[59 FR 29193, June 6, 1994]

§ 1254.16 Prevention of damage to documents.

(a) Researchers must exercise all possible care to prevent damage to documents.

(b) Documents may not be used at a desk where there is food or liquid or where an ink pen is being used. Only pencils may be used in research rooms where original documents are used.

(c) Documents must not be leaned on, written on, folded anew, traced, or handled in any way likely to cause damage.

(d) Documents must be identified for reproduction only with a paper tab provided by NARA. Documents may not be fastened with paper clips or rubber bands.

(e) Microfilm must be carefully removed from and returned to the proper microfilm boxes. Care must be taken loading and unloading microfilm from microfilm readers. Damaged microfilm must be reported to the research room attendant as soon as it is discovered.

(f) Exceptionally valuable or fragile documents may be used only under the conditions specified by the research room attendant.

[59 FR 29193, June 6, 1994]

§ 1254.17 Keeping documents in order.

A researcher must keep unbound documents in the order in which they are delivered to him/her. Documents that appear to be in disorder must not be rearranged by the researcher, but must be referred to the research room attendant. Researchers may use only one folder at a time. Researchers are not allowed to remove documents from more than one container at a time. Researchers should bring to the attention of the research room attendant microfilm put in the wrong box or file cabinet.

[Redesignated and revised at 59 FR 29193, June 6, 1994]

§ 1254.18 Removal or mutilation of documents.

Researchers may not remove documents from a research room. Removing or mutilating documents is forbidden by law and is punishable by fine or imprisonment or both (18 U.S.C. 2071). Researchers must check personal belongings, including briefcases, folders, coats, newspapers, or containers of any kind before entering a research room. Upon leaving, researchers must present for examination any article that could contain documents. To ensure that documents are not unlawfully removed or mutilated, the director may issue and post at the entrance to the research room instructions supplementing the rules in subpart B.

[49 FR 33254, Aug. 22, 1984. Redesignated at 50 FR 15723, Apr. 19, 1985]

§ 1254.20 Conduct.

(a) *Regulations.* Researchers are subject to the provisions of part 1280 of this chapter and to all rules and regulations issued and posted or distributed by a facility director supplementing subpart B of this part, including rules on the use of NARA equipment. Eating, drinking, and chewing gum in a research room are prohibited. Smoking is prohibited except in designated smoking areas. Loud talking and other activities likely to disturb other researchers are also prohibited. Persons desiring to use typewriters, computers, sound recording devices, or similar equipment must work in areas designated by the research room attendant.

(b) *Revocation of a researcher identification card.* If researchers who receive researcher identification cards refuse to comply with the rules and regulations of a NARA facility, or by their actions demonstrate that they present a danger to the documents or a danger or annoyance to other researchers or employees, they may have their identification cards revoked by the director. A researcher whose card is revoked is denied research privileges at all NARA facilities and must receive a written notice of the reasons for the revocation within 3 workdays. A researcher whose identification card is revoked has 30 calendar days after the revocation to appeal in writing to the Archivist of the United States, National Archives (N), Washington, DC 20408, for reinstatement of research privileges. On receiving an appeal, the Archivist of the United States has 30 days to decide whether or not to reinstate the research privileges. If the revocation is upheld or if no appeal is made, the researcher may not apply for another identification card for 6 months from the date of the revocation, and all NARA facilities will be so notified. At the end of 6 months, a researcher whose identification card was revoked may reapply for a new card. Upon application, a new identification card is issued for a probationary period of 2 months. However, if the probationary reinstatement of a researcher poses a serious threat to the safety of persons or property, the director may deny probationary reinstatement and will so advise the applicant in writing within 3 workdays of receiving the application. At the end of the probationary period the researcher may apply for a new identification card valid for 2 years. If

the researcher's conduct in NARA facilities during the probationary period is proper, a regular 2-year identification card is issued. If the researcher's conduct during the probationary period is found unsatisfactory or if the director denies reinstatement, research privileges will again be denied for 6 months. A second and any later revocation of research privileges may be appealed to the Archivist of the United States under the procedures in this section.

(c) *Withdrawal of research privileges for researchers not required to have a researcher identification card.* If researchers who are not required to have researcher identification cards refuse to comply with the rules and regulations of a NARA facility or by their actions demonstrate that they present a danger to NARA property or a danger or nuisance to other researchers or employees, NARA may withdraw all research privileges. A researcher whose research privileges are withdrawn under this paragraph will lose research privileges at all NARA research rooms, including those for which no researcher identification card is required. A researcher whose research privileges have been withdrawn may not apply for a researcher identification card, or for readmittance to research rooms not requiring a research card, until research privileges have been restored (see below). A researcher whose research privileges are withdrawn under this paragraph will be sent a written notice of the reasons for the withdrawal within 3 workdays. The researcher has 30 calendar days after the withdrawal to appeal in writing to the Archivist of the United States (address: National Archives and Records Administration (N), Washington, DC 20408) for reinstatement of research privileges. The Archivist of the United States has 30 calendar days from receipt of the appeal to decide whether or not to reinstate the research privileges. If the withdrawal is upheld or if no appeal is made, the researcher may request reinstatement of privileges no earlier than 180 calendar days from the date the privileges were revoked. If readmission to a NARA facility poses a threat to the safety of persons or property, NARA may continue to extend the withdrawal period for 180-day periods. The researcher will be notified in writing of all such extensions within 3 workdays of NARA receiving a request for reinstatement of research privileges. The researcher may appeal any decision to extend the withdrawal of research privileges to the Archivist of the United States. All appeals must be made in writing to the Archivist of the United States within 30 calendar days of the decision being appealed.

[49 FR 33254, Aug. 22, 1984. Redesignated at 50 FR 15723, Apr. 19, 1985, and amended at 51 FR 17187, May 9, 1986; 56 FR 2135, Jan. 22, 1991; 59 FR 29193, June 6, 1994]

§ 1254.24 Locker use policy.

(a) The National Archives and Records Administration (NARA) prohibits researchers from carrying boxes, briefcases, satchels, valises, purses, or other large containers into the research rooms or authorized stack areas. To accommodate researchers who have these items, lockers or other storage facilities are conveniently located near research rooms. These lockers or other storage facilities are available on a first-come-first-served basis.

(b) Researchers' personal belongings must be removed each night from the lockers or other storage facilities provided to hold them unless special permission is obtained in advance from designated research room staff. If personal belongings are not removed from the facilities by the researcher, they will be removed by NARA personnel. Directions for reclaiming confiscated items will be posted near the lockers or other storage facilities.

(c) The National Archives and Records Administration is not responsible for the loss or theft of articles stored in the lockers.

[45 FR 8603, Feb. 8, 1980. Redesignated at 50 FR 15723, Apr. 19, 1985]

§ 1254.26 Additional rules for use of certain research rooms in NARA facilities in the Washington, DC, area.

(a) Admission to research rooms in the National Archives Building, the Washington National Records Center, and the National Archives at College Park facility at which original documents are made available is limited to individuals examining and/or copying

documents and other materials in the custody of the National Archives and Records Administration. Children under the age of 16 will not be admitted to these research rooms unless they have been granted research privileges or are granted an exception to this provision to view specific documents that a parent or other accompanying adult researcher is using. The exception will be granted by the Director of the User Services Division for a child who is able to read and who will be closely supervised by the adult researcher while in the research room. Normally, such a child will be admitted only for the short period required to view the documents. Unless otherwise permitted, children under the age of 16 who have been granted special permission to accompany an adult using records may not actively participate in research activities, e.g., removing, copying, or refiling documents. Students under the age of 16 who wish to perform research on original documents must apply in person to the Director of the User Services Division and present a letter of reference from a teacher. Such students may contact the National Archives by phone or letter in advance of their visit to discuss their eligibility for research privileges. Students under the age of 16 who have been granted research privileges will be required to be accompanied in the research room by an adult with similar privileges, unless the Director of the User Services Division specifically waives this requirement with respect to individual researchers.

(b) The procedures in paragraphs (c) through (g) of this section apply to all research rooms in the National Archives Building (except the Microfilm Research Room); the Suitland Research Room in the Washington National Records Center; and the research rooms in the National Archives at College Park. These procedures are in addition to the procedures specified elsewhere in this part.

(c) All researchers bringing personal typewriters, tape recorders, cameras, personal computers, and other equipment, into the National Archives Building shall complete the Equipment Log at the guard's desk in the lobby. The log will evidence personal ownership and will be checked by the guard when such equipment is removed from the building.

(d) Researchers must present a valid researcher identification card to the guard or research room attendant on entering the room. All researchers are required to sign each day the research room registration sheet at the entrance to the research room. Researchers will also record the time they leave the research room at the end of the visit for that day. Researchers are not required to sign in or out when leaving the area temporarily.

(e) Researchers may not bring into the research rooms overcoats, raincoats, hats, or similar apparel; personal copying equipment, including personal paper-to-paper copiers; briefcases, suitcases, daypacks, purses, or similar containers of personal property; notebooks, notepaper, notecards, folders or other containers for papers. These items may be stored at no cost in lockers available in the hallway adjacent to the various research rooms. The following exceptions may be granted:

(1) Hand-held wallets and coin purses for the carrying of currency, coins, credit cards, keys, drivers licenses and other identification cards may be brought into research rooms, but are subject to inspection when the researcher enters or leaves the room. The guard or research room attendant shall judge whether the wallet or purse may be considered small for purposes of this section;

(2) Notes, references, lists of documents to be consulted, and other materials may be admitted if the chief of the branch administering the research room or the senior archivist on duty in the research room determines they are essential to a researcher's work requirements. Materials will be presented to the research room attendant when the researcher enters the research room. Materials approved for admission will be stamped to indicate that they are the personal property of the researcher;

(3) Typewriters, personal computers, tape recorders, and hand-held cameras may be admitted by the research room attendant provided that they are inspected, approved, and tagged prior to

admittance. The chief of the branch administering the research room or the senior archivist on duty in the research room will review the determination made by the research room attendant if requested to do so by the researcher; and

(4) Notepaper and notecards provided by the National Archives and electrostatic copies made on copying machines in NARA research rooms which are marked with the statement ''Reproduced at the National Archives'' may be brought back into the research room on subsequent visits but must be presented on entry to the research room attendant for inspection.

(f) NARA will furnish to researchers, without charge, pencils and specially marked lined and unlined notepaper and notecards, for use in the research rooms. Pencils and unused notepaper and notecards should be returned to the research room attendant at the end of the day.

(g) The personal property of all researchers, including notes, electrostatic copies, typerwriter cases, tape recorders, cameras, personal computers, and other property, will be inspected before removal from the research room. Guards and research room attendants may request that a member of the research room staff examine such personal items prior to their removal from the research room.

(h) In addition to the procedures in paragraphs (c) through (g) of this section, the following procedures apply to the Motion Picture, Sound, and Video Research Room (hereinafter, ''the research room'') in the National Archives Building:

(1) Use of NARA viewing and listening equipment in the research room is provided on a first-come-first-served basis. When others are waiting to use the equipment, a three-hour limit may be imposed on the use of the equipment.

(2) The following procedures shall be followed when personal recording equipment and accessories are brought into the unrestricted viewing and copying area in the research room:

(i) Personal recording equipment brought into the unrestricted viewing and copying area in the research room must be inspected and tagged by the research room attendant prior to admittance. All equipment and accessory devices must be placed on the table adjacent to the viewing station, except that a tripod holding a video camera may be placed on the floor in front of a film viewing station.

(ii) Researchers shall remain in the research room while their personal equipment is in use at an audio or video viewing station. The film viewing stations must be attended at all times while in use. Researchers shall remove their personal equipment from the research room when they leave the room for the day or for extended breaks.

(iii) NARA will not be responsible for assisting with ''hook-up'' to NARA viewing equipment; for providing compatibility between the personal recording equipment and NARA viewing equipment; or for the quality of the copies made by researchers. NARA will provide the researcher information on the types of NARA equipment being used in the research room and on the cables necessary for hook up to the NARA viewing equipment.

(3) When a researcher brings audio or video recording tapes or cassettes into the unrestricted area of the research room, the research room attendant will mark the recording media ''NARA-approved personal property'' for identification purposes. Such media shall be inspected upon exit from the research room, as well as upon exit from the National Archives Building.

(4) A NARA-furnished video copying station and 120-minute blank video cassette may be reserved, for a fee, on a first-come, first-served basis for a 90-minute period of time. If no other individual is waiting to use the station, an additional time period may be reserved at the end of the current period. Personal recording devices may not be connected to NARA equipment at the video copying station. Only NARA-provided tapes may be used at the video copying station. Fees for use of the station and blank cassette are specified in § 1258.12 of this chapter.

(5) The NARA or personal recording device and media may be used to make a personal-use copy of unrestricted archival materials in the research room.

(6) Each researcher will be provided a copy of the Motion Picture, Sound, and

Video Research Room rules and a warning notice on potential copyright claims in unrestricted titles. The researcher must sign a statement acknowledging receipt of the rules and notice. The individual making and/or using the copy is responsible for obtaining any needed permission or release from a copyright owner for other use of the copy.

(7) No personal recording device or media is permitted in the restricted viewing area in the research room.

[51 FR 17187, May 9, 1986, as amended at 56 FR 2135, Jan. 22, 1991; 56 FR 58312, Nov. 19, 1991; 57 FR 46306, Oct. 8, 1992; 59 FR 29193, June 6, 1994]

§ 1254.27 Additional rules for use of certain research rooms in Federal records centers, regional archives, and Presidential libraries.

(a) When directed by the appropriate director, the following procedures shall be observed in Federal Records Center, regional archives and Presidential library archival research rooms where original documents are used. These procedures are in addition to the procedures specified elsewhere in this part.

(b) Researchers must present a valid researcher identification card to the guard or research room attendant on entering the room. All researchers are required to sign each day the research room registration sheet at the entrance to the research room. Where instructed to do so, researchers also sign out when leaving the research room for the day. Researchers are not required to sign in or out when leaving the area temporarily or at the end of the day.

(c) Researchers may not bring into the research room overcoats, raincoats, hats, and similar apparel, and briefcases, suitcases, daypacks, purses, or similar containers of personal property. In facilities where NARA provides notepaper and notecards, researchers also may not bring into the research room notebooks, notepaper, notecards, folders or other containers for papers. In facilities where NARA provides a self-service copier, researchers may not bring into the research room personal copying equipment including personal paper-to-paper copiers. These items may be stored at no cost in lockers or other storage facilities in the NARA facility. The following exceptions may be granted:

(1) Hand-held wallets and coin purses for carrying currency, coins, credit cards, keys, drivers licenses and other identification cards may be brought into research rooms, but are subject to inspection when the researcher enters or leaves the room. The guard or research room attendant shall judge whether the wallet or purse may be considered small for purposes of this section;

(2) Notes, references, lists of documents to be consulted, and other materials may be admitted if the director, or the senior attendant on duty in the research room determines they are essential to a researcher's work requirements. Materials will be presented to the attendant when the researcher enters the research room. If the materials are approved for admission, they may be stamped to indicate that they are the researcher's property;

(3) Typewriters, personal computers, tape recorders, and hand-held cameras may be admitted by the guard or research room attendant provided that they are inspected, approved, and tagged prior to admittance. The director, or the senior attendant on duty in the research room will review the determination made by the guard or research room attendant if requested to do so by the researcher. In facilities where personal paper-to-paper copiers are permitted, the researcher must obtain prior written approval from the facility director to bring in the copier. The request to bring a personal copier should state the space and power consumption requirements and the intended period of use; and

(4) Notepaper and notecards provided by the National Archives and electrostatic copies made on copying machines in NARA research rooms which are marked with the statement ''Reproduced at the National Archives'' may be brought back into the research room on subsequent visits but must be presented on entry to the guard or research room attendant for inspection.

(d) NARA may furnish specially marked lined and unlined notepaper and notecards, without charge, to researchers for use in the research rooms. Unused notepaper and

notecards should be returned to the research room attendant at the end of the day.

(e) The personal property of all researchers, including notes, electrostatic copies, typewriter cases, tape recorders, cameras, personal computers, and other personal property, will be inspected before removal from the research room. Guards and research room attendants may request that a member of the research room staff examine such personal items prior to their removal from the research room.

(f) Researchers may use NARA self-service copiers or authorized personal paper-to-paper copiers to copy documents in accordance with NARA document handling instructions and after review of the documents by the research room attendant to determine their suitability for copying. The director or the senior archivist on duty in the research room will review the determination of suitability if requested by the researcher. The following types of documents are not suitable for copying on a self-service or personal copier:

(1) Bound archival volumes;

(2) Documents fastened together by staples, clips, acco fasteners, rivets, or similar fasteners, where folding or bending the document may cause damage;

(3) Documents larger than the glass copy plate of the copier;

(4) Documents with uncancelled security classification markings;

(5) Documents with legal restrictions on copying; and

(6) Documents which, in the judgement of the research room attendant, are in poor physical condition or which may be subject to possible damage if copied.

[51 FR 31617, Sept. 4, 1986, as amended at 59 FR 29192, 29194, June 6, 1994]

Subpart C—Access to Unclassified Records and Donated Historical Materials

§ 1254.30 Archives.

The use of archives is subject to the restrictions prescribed by statute or Executive order or by the restrictions specified in writting in accordance with 44 U.S.C. 2108 by the agency from which the records were transferred. NARA will make available any reasonably segregable portion of a record after the restricted portion has been deleted. The restrictions are published in the ''Guide to the National Archives of the United States,'' and supplemented by restriction statements approved by the Archivist of the United States and set forth in part 1256 of this chapter. The Guide is available from the Superintendent of Documents, Government Printing Office, Washington, DC 20402. The Guide may also be consulted at the NARA research facilities listed in part 1253 of this chapter.

[54 FR 32069, Aug. 4, 1989]

§ 1254.32 FRC records.

Requests for access to records on deposit in Federal records centers shall be addressed directly to the appropriate agency or to the FRC director at the address shown in part 1253. The use of FRC records is subject to access rules prescribed by the agency from which the records were transferred. When the agency's rules permit, NARA makes FRC records available to requesters. When access is precluded by these rules and restrictions, the FRC director will refer to the responsible agency the requests and any appeals for access, including those made under the Freedom of Information Act.

[40 FR 7925, Feb. 24, 1975. Redesignated at 50 FR 15723, Apr. 19, 1985]

§ 1254.34 Records of defunct agencies.

Access to archives and FRC records received from agencies which have ceased to exist without a successor in function are handled in accordance with §§ 1254.30 and 1254.50.

[44 FR 18496, Mar. 28, 1979. Redesignated at 50 FR 15723, Apr. 19, 1985]

§ 1254.35 Presidential records and Nixon Presidential materials.

Access to Presidential records transferred to NARA is governed by 36 CFR part 1270. Access to the Nixon Presidential materials is governed by 36 CFR part 1275.

[59 FR 29194, June 6, 1994]

§ 1254.36 Donated historical materials.

The public use of donated historical materials is subject to restrictions on their use and availability as stated in writing by the donors or depositors of such materials and other restrictions imposed by statute. (Researchers are encouraged to confer with the appropriate director or reference staff member on any question of copyright.) In addition, use is subject to all conditions specified by the Archivist of the United States for purposes of archival preservation.

[59 FR 29194, June 6, 1994]

§ 1254.38 Freedom of Information Act requests.

(a) *Applicability*. This section applies to Freedom of Information Act requests for unclassified and classified archives. This section does not apply to requests for FRC records or donated historical materials.

(b) *Definitions.*

Potentially confidential commercial information means records submitted to any agency by a submitter that may contain material exempt from release under 5 U.S.C. 552(b)(4) because disclosure could reasonably be expected to cause a submitter substantial competitive harm.

Submitter means any person or entity providing potentially confidential commercial information to an agency. The term *submitter* includes, but is not limited to, corporations, state governments, and foreign governments.

(c) *Requirements.* Requests for access to archives under the FOIA shall reasonably describe the records requested, shall be made in writing to the director of the appropriate NARA depository listed in part 1253 of this chapter or to the Assistant Archivist for the National Archives, and shall clearly indicate that the request is being made under the Act.

(d) *Processing time.* NARA shall inform requesters of the availability of records within 10 workdays after receiving a request, except when precluded from doing so by conditions as described in 5 U.S.C. 552a(6)(B), or by the need to consult with a submitter, as set forth in § 1254.39.

(e) *Denial of access.* Denials under the FOIA of access to archives are made by the appropriate director of a Presidential library or a regional archives or the Assistant Archivist for the National Archives, who, within 10 workdays, shall notify the requester of the reasons for the denial and of the procedures for appeal.

(f) *Appeals.* (1) A requester whose request for access is denied in whole or in part, or who receives a response that no responsive records were found and who considers the latter response as adverse in nature, may appeal that decision or finding within NARA. The appeal shall be in writing and addressed to the Deputy Archivist of the United States (ND), National Archives, Washington, DC 20408.

(2) The Deputy Archivist must receive an appeal no later than 35 calendar days after the date of the NARA letter of denial to be considered timely.

(3) The appeal letter shall include the words ''Freedom of Information Act Appeal'' on both the letter and the envelope, and the requester shall enclose with the appeal letter a copy of the initial request and the denial.

(4) In the appeal letter the requester shall briefly state the reasons why NARA should release the records, or, if no responsive records were found and the requester considers this to be an adverse determination, why the requester thinks that the search does not meet the requirements of the FOIA.

(5) The Deputy Archivist shall consult with the agency specifying the restriction, when appropriate, and make a determination within 20 workdays after the date of receipt by the Deputy Archivist of the appeal. If an extension is required, the Deputy Archivist shall notify the requester within 20 workdays from receipt of the request. Time extensions shall not exceed 10 workdays in the aggregate: either solely in the initial stage or solely in the appellate stage, or divided between them.

(6) If the determination is adverse in whole or in part, the Deputy Archivist shall notify the requester of the right to judicial review.

(7) Denials and appeals of denials of access to information under the FOIA exemption 552(b)(1), national security

information, are processed in accordance with the provisions of § 1254.40.

[54 FR 32069, Aug. 4, 1989, as amended at 56 FR 2136, Jan. 22, 1991; 57 FR 22431, May 28, 1992]

§ 1254.39 Requests for commercial information.

(a) *Notice of receipt of request.* (1) Submitters of potentially confidential commercial information shall be given written notice and an opportunity to object to release when a request is received for information the submitter designated in accordance with the recipient agency's regulations as commercial confidential, and the request is received less than 10 years after submission of the information.

(2) When the request is for information from a single or small number of submitters, the notice shall be sent to the submitter's last known address.

(3) When the request is for information from a large number of submitters, notice shall be provided by publication of a notice in the FEDERAL REGISTER.

(4) The notice shall either describe the potentially commercially confidential information requested (if the notice is published in the FEDERAL REGISTER), or provide copies of the records containing the information.

(5) NARA shall inform the requester that:

(i) Notice of receipt of a request has been provided to the submitter;

(ii) The response to the request may be delayed beyond the limitations specified in 5 U.S.C. 552(a)(6) (A) and (B) to allow for time to provide notice to the submitter, and to consider any response;

(iii) The delay may be considered as a denial of access to records and that the requester may seek judicial review. However, the requester shall be invited to agree to a voluntary extension of time so that NARA may consider any claims of commercial confidentiality provided by the submitter.

(b) *Opportunity to object to disclosure.* (1) Through the notice described in paragraph (a)(1) of this section, NARA shall afford a submitter a reasonable period of time within which to provide NARA with a detailed statement of any objections to disclosure. A reasonable extension of the time limit for response may be granted when appropriate.

(2) The statement shall specify which information is claimed to be of a confidential commercial nature, and shall specify all grounds for withholding any of the information under the exemptions of the FOIA. If exemption (b)(4) of the FOIA is cited, the statement shall explain how the release of the information can be reasonably expected to cause substantial competitive harm to the submitter.

(3) The statement shall contain a certification that the information has not been published or officially released to the public.

(4) The statement provided pursuant to this subsection may itself be subject to disclosure under the FOIA under § 1250.75.

(c) *Notice of intent to disclose.* NARA shall carefully consider any good faith designations of commercial confidentiality made when the information was initially submitted to an agency, and any timely objections submitted in response to the NARA notice of receipt of a request to release. Except as provided for in paragraph (e) of this section, when NARA determines to disclose, whether in response to a request to release or as the result of an appeal of a denial of access, notice shall be sent to the submitter that:

(1) States why the initial designation or the objections were not sustained;

(2) Describes or encloses a copy of the information proposed for disclosed; and

(3) Specifies a date on which it is proposed to release the information unless barred by court order. The requester shall be simultaneously informed of the disclosure date.

(d) *Notice of law suit.* NARA will promptly inform the requester and submitter of any law suit filed by the other concerning possible disclosure.

(e) *Exception to notice requirements.* The notice requirements of this section do not apply when:

(1) NARA determines that the information should not be disclosed in accordance with one or more FOIA exemptions;

(2) The information has been published or officially made available to the public;

(3) Disclosure of the information is required by law (other than 5 U.S.C. 552); or,

(4) More than 10 years have passed since the date of submission, regardless of any designation as commercially confidential made by the submitter in accordance with the recipient agency's regulations, and NARA has no substantitial reason to believe that disclosure would result in competitive harm.

(5) The submitter failed to respond to a notice of receipt of request, in which case this initial notice shall serve as the notice of intent to disclose.

[54 FR 32070, Aug. 4, 1989]

Subpart D—Access to National Security Information

§1254.40 Access to national security information.

(a) Declassification of and public access to national security information and material, hereinafter referred to as ''classified information'' or collectively termed ''information'' is governed by Executive Order 12356 of April 2, 1982 (3 CFR, 1982 Comp., p. 166), the implementing Information Security Oversight Office Directive Number 1 of June 22, 1982 (47 FR 27836, June 25, 1982) and the Freedom of Information Act (5 U.S.C. 552).

(b) Public access to documents declassified in accordance with this regulation may be restricted or denied for other reasons under the provisions of 5 U.S.C. 552(b) for accessioned agency records; 36 CFR 1254.36 for donated historical materials; 44 U.S.C. 2201 *et seq.* and 36 CFR part 1270 for Presidential records; and 44 U.S.C. 2111 note and 36 CFR part 1275 for Nixon Presidential materials.

[59 FR 29194, June 6, 1994]

§1254.44 Freedom of Information Act requests.

(a) *Requests for access to national security information under the Freedom of Information Act.* Requests for access to national security information under the Freedom of Information Act are processed in accordance with the provisions of §1254.38. Time limits for responses to Freedom of Information Act requests for national security information are those provided in the act rather than the longer time limits provided for responses to mandatory review requests specified by Executive Order 12356.

(b) *Agency action.* Upon receipt of a request forwarded by NARA for a determination regarding declassification, the agency with declassification responsibility shall:

(1) Advise whether the information should be declassified in whole or in part or should continue to be exempt from declassification;

(2) Provide a brief statement of the reason any requested information should not be declassified; and

(3) Return all reproductions referred for determination, including a copy of each document which should be released only in part, marked to indicate the portions which remain classified.

(c) *Denials and Appeals.* Denials under the Freedom of Information Act of access to national security information accessioned into the National Archives are made by designated officials of the originating or responsible agency. NARA notifies the requestor of the agency's determination. Appeals of denials of access to national security information must be made in writing to the appropriate authority in the agency having declassification responsibility for the denied information as indicated in §1254.42. The agency appellate authority shall make a determination in accordance with 5 U.S.C. 552(b). The agency appellate authority shall notify NARA and the requestor in writing of the final denials. The agency will also furnish to NARA a copy of each document released only in part, marked to indicate the portions which remain classified.

[49 FR 1349, Jan. 11, 1984. Redesignated at 50 FR 15723, Apr. 19, 1985; further redesignated and amended at 51 FR 22076, June 18, 1986; 54 FR 32070, Aug. 4, 1989]

§1254.46 Public requests for mandatory review of classified information under Executive Order 12356.

United States citizens or permanent resident aliens, Federal agencies, or State or local governments wishing to request mandatory review of classified information that has been accessioned

into the National Archives or donated to the Government may do so by describing the document or material containing the information with sufficient specificity to enable NARA to locate it with a reasonable amount of effort. When practicable, a request shall include the name of the originator and recipient of the information, as well as its date, subject, and file designation. If the information sought cannot be identified from the description provided or if the information sought is so voluminous that processing it would interfere with NARA's capacity to serve all requestors on an equitable basis, NARA shall notify the requestor that, unless additional information is provided or the scope of the request is narrowed, no further action will be taken. NARA shall review for declassification and release the requested information or those declassified portions of the request that constitute a coherent segment unless withholding is otherwise warranted under applicable law. Requests for mandatory review should be addressed to the appropriate NARA depository listed in part 1253.

[49 FR 1350, Jan. 11, 1984. Redesignated at 50 FR 15723, Apr. 19, 1985]

§ 1254.48 Access by historical researchers and former Presidential appointees.

(a) Access to classified information may be granted to U.S. citizens who are engaged in historical research projects or who previously occupied policy-making positions to which they were appointed by the President. Persons desiring permission to examine material under this special historical researcher/Presidential appointees access program should contact NARA at least 4 months before they desire access to the materials to permit time for the responsible agencies to process the requests for access. NARA will inform requesters of the agencies to which they will have to apply for permission to examine classified information, including classified information originated by the White House or classified information in the custody of the National Archives which was originated by a defunct agency.

(b) Requestors may examine records under this program only after the originating or responsible agency:

(1) Determines in writing that access is consistent with the interest of national security;

(2) Takes appropriate steps to protect classified information from unauthorized disclosure or compromise, and ensures that the information is safeguarded in a manner consistent with Executive Order 12356; and

(3) Limits the access granted to former presidential appointees to items that the person originated, reviewed, signed, or received while serving as a presidential appointee.

(c) To protect against the possibility of unauthorized access to restricted documents, a director may issue instructions supplementing the research room rules provided in subpart B.

[49 FR 1352, Jan. 11, 1984. Redesignated at 50 FR 15723, Apr. 19, 1985 and 51 FR 22076, June 18, 1986; 59 FR 29194, June 6, 1994]

§ 1254.50 Fees.

NARA will charge requesters for copies of declassified documents according to the fees listed in § 1258.12 of this chapter.

[59 FR 29194, June 6, 1994]

Subpart E—Information, Reproduction, and Authentication Services

§ 1254.70 NARA copying services.

(a) The copying of documents will be done by personnel of the National Archives and Records Administration with equipment belonging to NARA. NARA reserves the right to make a duplicate, at NARA expense, of any material copied. Such duplicates may be used by NARA to make additional copies for others.

(b) In order to preserve the original documents, documents which are available on microfilm or other alternate copy will not be copied by other means as long as a legible copy (electrostatic, photographic, or microfilm) can be made from the microfilm.

[52 FR 20080, May 29, 1987; 59 FR 29194, June 6, 1994]

§ 1254.71 Researcher use of the self-service card-operated copiers in the National Archives Building, the Washington National Records Center and the National Archives at College Park.

(a) *General.* Self-service card-operated copiers are located in research rooms in the National Archives Building, the Suitland Research Room in the Washington National Records Center, and the National Archives at College Park. Other copiers set aside for use by reservation are located in designated research areas. Procedures for use are outlined in paragraphs (b) through (g) of this section.

(b) *Hours of use.* (1) Copiers located in research rooms in the National Archives Building, the Suitland Research Room in the Washington National Records Center, and the National Archives at College Park may be used until 15 minutes prior to closing of the research room. There is a five-minute time limit on these copiers when others are waiting to use the copier. Researchers using microfilm reader-printers may be limited to three copies when others are waiting to use the machine. Researchers wishing to copy large quantities of documents should see a staff member in the research room to reserve a copier for an extended time period.

(2) Reserved self-service copiers located in the designated research area on the second floor of the National Archives Building may be used between 9 a.m. and 12 noon and between 1 p.m. and 5 p.m., Monday through Friday, except Federal holidays. The reserved self-service copier located in the designated research area at the Washington National Records Center may be used between the hours of 8 a.m. and 12 noon and between 1 p.m. and 4 p.m., Monday through Friday, except Federal holidays.

(i) A copier may be reserved for one hour at a time in the textual research room in the National Archives Building and the National Archives at College Park and for one-half hour at a time in the Microfilm Research Room in the National Archives Building and in the Suitland Research Room in the Washington National Records Center. Another appointment may be reserved after completing the scheduled appointment. The appointment may be forfeited if the researcher does not arrive within 10 minutes after the scheduled time.

(ii) If an appointment must be canceled due to copier failure, NARA will make every effort to schedule a new mutually agreed-upon time. However, NARA will not displace researchers whose appointments are not affected by the copier failure.

(c) *Copying procedures.* (1) Individual documents to be copied shall be tabbed in accordance with the procedures governing the tabbing of documents and returned to their container. The research room attendant will examine the documents to determine whether they can be copied on the self-service copier. The chief of the branch administering the research room will review the determination of suitability if asked to do so by the researcher.

(2) Researchers using the reserved copiers must submit the containers of documents to the attendant for review at least one hour prior to the scheduled appointment. The research room staff will deliver the containers to the designated area where the reserved copiers are located. Researchers using self-service copiers located in the research room will transport their containers of documents to the copier themselves.

(3) Researchers may copy from only one box and one folder at a time. After copying the documents, the researcher must show the original documents and the copies to a research room attendant.

(d) *Documents not suitable for self-service copying.* The following types of documents may not be copied on the self-service copiers:

(1) Bound archival volumes;

(2) Documents fastened together by staples, clips, acco fasteners, rivets, or similar fasteners, where folding or bending documents may cause damage;

(3) Documents larger than the glass copy plate of the copier;

(4) Documents with uncanceled security classification markings;

(5) Documents with legal restrictions on copying; and

(6) Documents which, in the judgement of the research room attendant, are in poor physical condition or which

may be subject to possible damage if copied.

(e) *Cancellation of security classification markings.*

(1) Security classification markings (RESTRICTED, CONFIDENTIAL, SECRET, TOP SECRET, and others) on declassified records must be properly canceled before documents are copied. Only a NARA staff member can cancel security markings. Properly declassified documents will bear the declassification authority.

(2) Researchers may not remove from the research room copies of documents bearing uncanceled classification markings. Copies of documents with uncanceled markings will be confiscated.

(3) When individual documents are being copied, the research room staff will cancel the classification markings on each page and will place the declassification authority on the first page of each document. If the researcher is copying only selected pages from a document, the researcher must make a copy of the first page bearing the declassification authority and attach that page to any subsequent page(s) copied from the document. This declassification authority must be presented to the guard when copies of documents are removed from the research room and/or the building.

(4) Researchers using the reserved copiers are provided with a declassification strip which is attached to the copier. The strip, which is reproduced on each page copied, cancels the security markings.

(f) *Purchasing debitcards for copiers.* Researchers may use cash to purchase a debitcard from a vending machine during the hours that self-service copiers are in operation. Additionally, debitcards may be purchased with cash, check, money order, credit card, or funds from an active deposit account from the Cashier's Office located in room G–1 of the National Archives Building between the hours of 8:45 a.m. and 4:30 p.m., Monday through Friday, except Federal holidays. During the evening and weekend hours, the research room supervisor can make change for $20 or less. The debitcard will, when inserted into the copier, enable the user to make copies, for the appropriate fee, up to the value on the debitcard. Researchers may add value to the debitcard by using the vending machine. The fee for self-service copies is found in § 1258.12 of this chapter.

(g) *Refunds of unused amounts on debitcards.*

(1) To obtain a refund of any unused amount on a debitcard, a researcher must bring the debitcard to the Cashier's Office in room G–1 of the National Archives Building. Cash refunds for debitcards are currently limited to $20.00 or less. Refunds due for more than $20.00 are currently paid by U.S. Treasury check in approximately 6–8 weeks. Refunds due on debitcards obtained using credit cards will be made by issuing a credit of the refund amount to the credit card. Refunds due on debitcards obtained using funds from a deposit account will be made by crediting the refund to the deposit account.

(2) An NATF Form 30A, Request for Debit Card Refund or Credit, must be submitted to the Cashier's Office. The form is available from the research room staff or the Cashier. During evening hours and on Saturdays, researchers should enclose the completed form and debitcard in a preaddressed envelope, also available in the research room. The envelope may be dropped through the mail slot in room G–1 or mailed to the Cashier.

[56 FR 2136, Jan. 22, 1991; 56 FR 5731, Feb. 12, 1991; 59 FR 29194, June 6, 1994]

§ 1254.72 Information about documents.

(a) Upon request, overall information pertaining to holdings or about specific documents will be furnished, provided that the time required to furnish the information is not excessive, and provided that the information is not restricted (see subpart C and subpart D).

(b) When so specified by a director, requests must be made on prescribed forms. Such forms will be approved by OMB as information collections and will bear the approved control number.

[59 FR 29195, June 6, 1994]

§ 1254.74 Information from documents.

Normally, information contained in the documents will be furnished in the

form of photocopies of the documents, subject to the provisions of §1254.70. NARA will certify facts and make administrative determinations on the basis of archives, or of FRC records when appropriate officials of other agencies have authorized NARA to do so. Such certifications and determinations will be authenticated by the seal of NARA, the National Archives of the United States, or the transferring agency, as appropriate.

[59 FR 29195, June 6, 1994]

§1254.76 Certification of copies.

The responsible director, or any of his or her superiors, the Director of the Federal Register, and their designees are authorized to certify copies of documents as true copies.

[59 FR 29195, June 6, 1994]

Subpart F—Microfilming Archival Records

SOURCE: 52 FR 20081, May 29, 1987, unless otherwise noted.

§1254.90 General.

(a) This subpart establishes rules and procedures governing the use of privately owned microfilm equipment to film archival records and donated historical materials in the National Archives Building, the Washington National Records Center, the regional archives, and the Presidential libraries.

(b) Persons or organizations wishing to microfilm Federal agency records in the custody of a Federal Records Center should contact the director of the Center about procedures for obtaining permission to film those records.

(c) Federal agencies needing to microfilm archival records in support of the agency's mission must contact the Assistant Archivist for the National Archives, as soon as possible after the need is identified, for information concerning standards and procedures for microfilming archival records.

[52 FR 20081, May 29, 1987, as amended at 59 FR 29195, June 6, 1994]

§1254.92 Requests to microfilm records and donated historical materials.

(a) Requests to microfilm archival records or donated historical materials (except donated historical materials under the control of the Office of Presidential Libraries) in the National Archives Building, the Washington National Records Center, or the regional archives must be made in writing to the Assistant Archivist for the National Archives (NN), NARA, Washington, DC 20408. Requests to microfilm records or donated historical materials in a Presidential library or donated historical materials in the National Archives Building under the control of the Office of Presidential Libraries must be made in writing to the Assistant Archivist for Presidential Libraries (NL), NARA, Washington, DC 20408. OMB control number 3095–0017 has been assigned to the information collection contained in this section.

(b) Request to use privately owned microfilm equipment should be submitted six months in advance of the proposed starting date of the microfilming project. Requests submitted with less advance notice will be considered and may be approved if space is available for the cameras in the area set aside for private microfilming and if the records require minimal preparation for filming. Only one microfilming project may be included in a request. NARA will not accept additional requests from an individual or organization to microfilm records in a NARA facility while NARA is evaluating an earlier request from that individual or organization to microfilm records at that facility. NARA will establish the number of camera spaces available to a single project based upon the total number of projects approved for filming at that time.

(c) The request must include:

(1) A description of the documents to be copied which includes the following elements:

(i) Agency of origin or, for donated historical materials, title of the collection,

(ii) Title of series or file segment;

(iii) Date span; and

(iv) Estimated volume in number of pages or cubic feet.

(2) The estimated amount of time (work-days) that the microfilm copying project will take; the date that the requester would like to begin the project; and the number of persons who would require training (see § 1254.100(b)).

(3) The number and a description of the equipment that will be used for copying including:

(i) The name of the manufacturer and model number; and

(ii) The type of light source to be employed (fluorescent, tungsten, or electronic flash) and if electronic flash (i.e., strobe) or fluorescent, whether the light source is filtered to omit ultraviolet radiation.

(4) A statement of the procedures which will be followed to ensure that all pages are copied, that the images on the microfilm are legible, and that the microfilm is properly processed. At a minimum, the procedures should meet the requirements specified in part 1230 of this chapter regarding the microfilming of permanent records.

(d) The requester must agree to credit the National Archives or the particular Presidential Library having custody of the original documents. The credit must appear at the beginning of a microfilm publication and in any publicity material or descriptions of the publication.

(1) If the original documents are Federal records, the requester must agree to include on the film this statement: ''The documents reproduced in this publication are among the records of the (name of agency) in the custody of the National Archives of the United States. No copyright is claimed in these official U.S. Government records.''

(2) If the original documents are donated historical materials, the requester must agree to include on the film this statement: ''The documents reproduced in this publication are donated historical materials from (name of donor) in the custody of the (name of Presidential library or National Archives). The National Archives administers them in accordance with the requirements of the donor's deed of gift and the U.S. Copyright Law, Title 17, U.S.C.''.

(e) If the person or organization producing the film plans to copyright the microfilm publication, the National Archives and Records Administration must be given a royalty-free worldwide license to sell the publication seven years after filming at the NARA facility is completed, or earlier if there is no commercial distributor.

[52 FR 20081, May 29, 1987; 52 FR 22415, June 11, 1987; 59 FR 29195, June 6, 1994]

§ 1254.94 Criteria for granting the requests.

(a) NARA will evaluate the requests on the basis of the extent to which completion of a proposed project would further NARA's efforts to preserve and to make available to the public the historically valuable records of the Government.

(b) NARA will approve only requests to microfilm a complete body of documents, such as an entire series or a major continous segment of a very large series which is reasonably divisible. Microfilming a complete body of documents means that all documents within the file unit(s) to be microfilmed will be consecutively copied, from the first to the last page, not skipping any pages in between except for pages that are exact duplicates or blank pages that are not included in a pagination scheme.

(c) NARA will normally approve only requests which include assurances that the project will adhere to the specifications in part 1230 of this chapter which concern microfilm stock standards, index placement, and microfilm processing for permanent records.

(d) NARA will approve only requests which specify that NARA will receive a first generation silver halide duplicate negative containing no splices made from the original camera negative of the microform record created in accordance with part 1230 of this chapter.

(1) NARA may use this duplicate negative microform to make duplicate preservation and reference copies. The copies may be made available for NARA and public use in NARA facilities and programs.

(2) NARA may also sell copies of the microform seven years after filming at

the NARA facility is completed, or earlier if there is no commerical distributor. NARA may choose to add its own editorial material to the microform copies which NARA distributes or sells.

(e) NARA will not approve any request that does not include all of the information required by § 1254.92.

(f) NARA will normally not approve requests to microfilm documents:

(1) Which have previously been microfilmed and made available to the public;

(2) Which have been approved for microfilming by another party; or

(3) Which NARA plans to film as a NARA microfilm publication or which relate closely to other documents previously microfilmed or approved for microfilming by NARA. Exceptions to this provision may be granted at the discretion of NARA.

(g) NARA will normally not approve requests to microfilm the following categories of documents:

(1) Documents which include documents with general or specific restrictions on access that preclude their reproduction;

(2) Documents which include documents which are known to be protected by copyright;

(3) Documents of high intrinsic value which may be handled only by authorized NARA personnel;

(4) Documents in vulnerable physical condition;

(5) Documents having a high research demand and which would have to be denied to others for an extended period of time during the microfilming process. Where possible, NARA will assist requesters in developing filming schedules that avoid the need to close documents for a lengthy period of time; and

(6) Oversize documents, bound volumes, and other formats that would be subject to excessive stress and possible damage from special equipment planned to be used by the requester, as well as documents fastened with grommets, heavy duty staples, miscellaneous fasteners, or wafers and other adhesives that cannot be removed without tearing or breaking documents.

(h) NARA will normally not approve requests from persons or organizations who have failed to produce usable microfilm or to honor commitments made in previous requests, or who have had a previous permission to microfilm documents rescinded because of their conduct.

(i) NARA will not approve requests to microfilm documents in NARA facilities in which there is insufficient space available for private microfilming. NARA will not move documents from a facility lacking space for private microfilming to another NARA facility for that purpose.

(j) Federal agencies microfilming records in support of the agency's mission may use the space set aside for private microfilming. Agency microfilming takes precedence over private microfilming when there is insufficient space to accommodate both at the same time.

§ 1254.96 Microfilm preparation.

(a) As part of its evaluation of a request to microfilm documents, NARA will determine the amount of microfilm preparation that NARA must do before the documents can be microfilmed and the estimated cost of such preparation. The fees for microfilm preparation will be based on direct salary costs (including benefits) and supply costs when NARA staff performs the work. When the work is performed by a NARA contractor, the fees will be the cost to NARA. Microfilm preparation includes:

(1) Verifying or correcting the arrangement of documents after withdrawn items are reviewed and refiled when appropriate;

(2) Screening the documents for possible restrictions on use;

(3) Declassifying security classified documents;

(4) Removing document fasteners from documents when the fasteners can be removed without damage to the documents; and

(5) Taking any document conservation actions that must be accomplished in order to film the documents, such as document flattening or mending.

(b) NARA will provide the requester detailed information on the fees for microfilm preparation in the letter of approval. Payment of fees will be made in accordance with § 1258.14 of this chapter. When a body of documents

will require extensive microfilm preparation, a different payment schedule may be established at the discretion of NARA.

[52 FR 20081, May 29, 1987; 52 FR 22415, June 11, 1987; 59 FR 29195, June 6, 1994]

§ 1254.98 Equipment standards.

(a) Equipment must be designed for the microfilming of documents in roll form or standard fiche form and be operable from a table top. Only planetary type camera equipment may be used. Automatic feed devices may not be used. Book cradles or other specialized equipment designed for use with bound volumes, oversized documents, or other formats will be approved by the Office of the National Archives on a case-by-case basis.

(b) The power consumption of the equipment normally must not exceed 1.2 kilowatts. Power normally available is 115 volts, 60 hz. Requests for electricity exceeding that normally available must be made at least 90 days in advance.

(c) Equipment having clamps or other devices to exert pressure upon or to affix the document to any surface in a way that might damage the document may not be used.

(d) The equipment must not use a heat generating light source in close enough proximity to the documents to result in their physicial distortion or degradation. All sources of ultraviolet light must be filtered.

[52 FR 20081, May 29, 1987; 52 FR 22415, June 11, 1987]

§ 1254.100 Microfilming procedures.

(a) Equipment used must conform to the equipment standards in § 1254.98.

(b) Documents must be handled in accordance with the training and instructions provided by NARA personnel so that documents are not damaged during copying and so that their original order is maintained. Only persons who have attended NARA training will be permitted to handle the documents or supervise microfilming operations. Training will be offered only in Washington, DC.

(c) Documents from only one file unit may be microfilmed at a time.

(d) Documents may not be left unattended on the copying equipment or elsewhere.

(e) Under normal microfilming conditions, actual copying time per sheet must not exceed 30 seconds.

(f) Any lights used with the camera must be turned off when the camera is not in actual operation.

(g) Microfilm equipment may be operated only in the presence of the research room attendant or a designated NARA employee.

(h) The equipment normally should be in use each working day that it is in a NARA facility. The director of the NARA facility (as defined in § 1252.2 of this chapter) will decide when equipment must be removed because of lack of regular use. The equipment must be promptly removed upon request of the facility director.

(i) NARA assumes no responsibility for loss or damage to microfilm equipment or supplies left unattended.

(j) NARA will inspect the microform output at scheduled intervals during the project to verify that the processed film meets the microfilm preparation and filming standards required by part 1230 of this chapter. To enable NARA to properly inspect the film, NARA must receive the film within 5 days after it has been processed. The person or organization producing the microfilm will provide NARA with a silver halide duplicate negative of the filmed records (see § 1254.94(d)) according to the schedule shown in (k). If the processed film does not meet the standards, NARA may require that the records be refilmed.

(k) When 10,000 or fewer images are filmed, the person or organization producing the microfilm will provide NARA with a silver halide duplicate negative upon completion of the project. When the project involves more than 10,000 images, a silver halide duplicate negative of the first completed roll or segment of the project reproducing this image count will be provided to NARA for evaluation; subsequent completed segments of the project, in quantities approximating 100,000 or fewer images, will be provided to NARA within 30 days after filming unless NARA approved other arrangements.

§1254.102 Rescinding permission.

NARA may, at any time, rescind permission to microfilm records:

(a) If the person or organization fails to comply with the microfilming procedures in §1254.100;

(b) If inspection of the processed microfilm reveals persistent problems with the quality of the filming or processing;

(c) If the person or organization fails to proceed with the microfilming or project as indicated in the request, or

(d) If the microfilming project is having an unanticipated adverse effect on the condition of the documents or the space set aside in the NARA facility for microfilming.

PART 1256—RESTRICTIONS ON THE USE OF RECORDS

Sec.

1256.1 Scope of part.
1256.2 Restrictions on access.
1256.4 Access to records containing personal information.

Subpart A—General Restrictions

1256.10 National security information.
1256.12 Information exempted from disclosure by statute.
1256.14 Trade secrets and commercial or financial information.
1256.16 Information which would invade the privacy of an individual.
1256.18 Information related to law enforcement investigations.

Subpart B—Specific Restrictions

1256.40 Agency-imposed restrictions.

Subpart C—Domestic Distribution of United States Information Agency Materials in the National Archives of the United States

1256.50 Scope of subpart.
1256.52 Purpose.
1256.54 Definition.
1256.56 Transfer of USIA audiovisual records to NARA.
1256.58 Domestic distribution of USIA audiovisual records transferred to NARA.
1256.60 Fees.

AUTHORITY: 44 U.S.C. 2101–2118; 22 U.S.C. 1461(b).

§1256.1 Scope of part.

This part contains material referred to in §1254.30.

[40 FR 56892, Dec. 5, 1975. Redesignated and amended at 50 FR 15723, 15727, Apr. 19, 1985]

§1256.2 Restrictions on access.

The use of some archives and donated historical materials transferred to the National Archives of the United States, especially those of recent date, is subject to restrictions prescribed in statute or Executive order, or restrictions specified by the donor or agency from which the records were transferred and imposed by the Archivist of the United States. Restrictions on access to particular records that have been specified by the donor or transferring agency are known as ''specific restrictions.'' Restrictions on access that may apply to more than one record group are termed ''general restrictions,'' and apply to the kinds of information or classes of records designated, regardless of the record group to which such records have been allocated. Both specific and general restrictions have been published in the ''Guide to the National Archives of the United States.'' (See §1254.30.) Subparts A and B contain restrictions that have been added or revised since the publication of the latest edition of the Guide.

[40 FR 56892, Dec. 5, 1975. Redesignated at 50 FR 15723, Apr. 19, 1985]

§1256.4 Access to records containing personal information.

(a) *NARA policy*. Access to archival records containing information access to which would invade the privacy of an individual is restricted by §1256.16.

(1) NARA may authorize access to such records for the purpose of statistical or quantitative research to qualified persons doing biomedical research under the conditions outlined in this section.

(2) If NARA is able to make a copy of such records with all personal identifiers masked or deleted, NARA will make such a ''sanitized'' copy of the record available to all researchers in accordance with part 1254 of this chapter.

(3) NARA will not grant access to restricted census and survey records of

the Bureau of the Census less than 72 years old containing data identifying individuals enumerated in population censuses in accordance with 44 U.S.C. 2108(b).

(4) NARA will not grant access contrary to a specific restriction to records which have specific restrictions on access imposed by the agency of origin in accordance with § 1256.40.

(b) *Request for access.* Researchers who wish to have access to records the use of which is restricted by § 1256.16 to conduct biomedical research must submit a written request to the Assistant Archivist for the National Archives (NN), National Archives and Records Administration, Washington, DC 20408. OMB control number 3095–0002 has been assigned to this collection of information requirement. Researchers are encouraged to consult informally NARA prior to submitting the formal request. The request must include the following information:

(1) Name and mailing address;

(2) Institutional affiliation and position, if applicable;

(3) List of published research;

(4) References from two persons who have first-hand knowledge of the requester's qualifications to perform the research;

(5) A statement of the nature of the research to be conducted and any plans for publication or presentation of the research findings;

(6) A listing of all sources of great funds supporting the research project or its publication;

(7) A statement of the methodology to be used;

(8) A statement of the administrative, technical, and physical safeguards to be employed by the researcher to prevent unauthorized use or disclosure of the records;

(9) A listing of the record groups and series titles to be used; and

(10) A statement that the researcher will abide by the conditions of access to be prescribed by NARA and that the researcher will assume responsibility for the action of all persons working with the researcher on the project.

(c) *Access Review Committee.* Requests made under paragraph (b) of this section will be reviewed by NARA's Access Review Committee, which is composed of the Deputy Archivist of the United States, the Assistant Archivist for the National Archives, and the director(s) of the NARA division(s) which has custody of the requested records. The Committee may consult other persons within and outside the Federal Government who are knowledgeable in the research field for assistance in evaluating a request.

(1) The Committee will examine the request to determine:

(i) Whether the requested information is of such a highly sensitive personal nature that disclosure should not be permitted even for biomedical statistical or quantitative research;

(ii) Whether the methodology proposed by the requester will permit the researcher to obtain the projected research results without revealing personally identifying information;

(iii) Whether the research results will be published or presented at an academic or research conference;

(iv) Whether the requester is a *bona-fide* biomedical researcher who has previous experience in conducting statistical research projects and publishing articles or books on such research;

(v) Whether the safeguards proposed by the requester will adequately protect the personal information; and

(vi) Whether NARA has sufficient staff and space available to safeguard privacy interests necessary to accommodate the research project.

(2) The decision of the Committee will be made in writing to the requester within 15 workdays after receipt of a completed request. At the discretion of the Committee, the researcher may meet with the Committee to discuss the project or to discuss revising the research proposal to meet possible objections of the Committee.

(d) *Conditions of access.* Researchers who are granted access to restricted records, all others associated with the research project who will have access to personally identifiable information from the records, and the manager of any ADP facility handling the records or data elements containing personal identifiers shall agree in writing to maintain the confidentiality of the information and to adhere to the conditions of access imposed by NARA. NARA may impose some or all of the

following conditions of access on any project; additional conditions may be imposed on the use of specific records or on specific projects:

(1) The records may be used only for the purpose of the statistical research and for the statistical reporting of research findings as described in the approved research project. The records may not be used for any other purpose without NARA approval;

(2) The records and copies of any data elements which permit the identification of an individual or which can be identified with an individual may not be transferred to any person or institution not directly involved with the approved research project;

(3) Reasonable administrative, technical, and physical safeguards, as approved by NARA, to prevent unauthorized use or disclosure of the records shall be established by the researcher and followed by all persons associated with the research project;

(4) When required by NARA, the records shall be consulted at the NARA facility where the records are located;

(5) Any individually identifiable information in the researcher's notes or in authorized copies of the records shall be rendered anonymous by the researcher at the earliest possible time consistent with the purpose of the research project;

(6) Persons who are identified in the records may not be contacted by or on behalf of the researcher;

(7) Prior to publication or public presentation of the data, the final research product(s) shall be provided to the Assistant Archivist for the National Archives for review. NARA's review shall be limited to ensuring that there is no possible identification of individuals in the research findings. NARA will not evaluate the validity of the research findings;

(8) All research notes containing personally identifiable information from privacy-restricted records and/or copies of such records shall, upon completion of the project, be destroyed or returned to NARA, whichever condition NARA has imposed as a condition of access. If the notes and/or copies are destroyed, the researcher shall verify in writing to the Assistant Archivist for the National Archives that the research notes and/or copies have been destroyed.

(e) *Noncompliance with conditions of access.* If NARA discovers that a researcher has violated any of the conditions of access imposed by NARA, NARA shall take steps to revoke the NARA research privileges of that person and shall consult with the NARA legal counsel to determine any other steps to be taken to prevent any further disclosure of the personal information concerned. NARA may also inform the following persons and organizations of the researcher's failure to follow the conditions of use:

(1) The institution with which the researcher is affiliated, if applicable;

(2) Persons who served as references in the application for access;

(3) Organizations which provided grant funds for the project;

(4) The sponsor of the publication or public presentation; and/or

(5) Appropriate professional organizations.

[53 FR 6821, Mar. 3, 1988]

Subpart A—General Restrictions

§ 1256.10 National security information.

(a) *Records.* Records containing information regarding national defense or foreign policy and properly classified under an Executive order.

(b) *Restrictions.* Such records may be disclosed only in accordance with the provisions of such Executive order and its implementing directive.

(c) *Imposed by.* Archivist of the United States in accordance with 5 U.S.C. 552 and 44 U.S.C. 2108.

[48 FR 6540, Feb. 14, 1983. Redesignated at 50 FR 15723, Apr. 19, 1985]

§ 1256.12 Information exempted from disclosure by statute.

(a) *Records.* Records containing information which is specifically exempted from disclosure by statute.

(b) *Restrictions.* Such records may be disclosed only in accordance with the provisions of 44 U.S.C. 2108.

(c) *Imposed by*. Archivist of the United States in accordance with 5 U.S.C. 552 and 44 U.S.C. 2108.

[48 FR 6541, Feb. 14, 1983, as amended at 48 FR 45393, Oct. 5, 1983. Redesignated at 50 FR 15723, Apr. 19, 1985]

§ 1256.14 Trade secrets and commercial or financial information.

(a) *Records*. Records not restricted by statute but which contain trade secrets and commercial or financial information submitted to the government with an expressed or implied understanding of confidentiality.

(b) *Restrictions*. Such records may be disclosed only if:

(1) The party that provided the information agrees to its release; or

(2) In the judgment of the Archivist of the United States, the passage of time is such that release of the information would not result in substantial competitive harm.

(c) *Imposed by*. Archivist of the United States in accordance with 5 U.S.C. 552 and 44 U.S.C. 2108.

[48 FR 6541, Feb. 14, 1983. Redesignated at 50 FR 15723, Apr. 19, 1985]

§ 1256.16 Information which would invade the privacy of an individual.

(a) *Records*. Records containing information about a living individual which reveal details of a highly personal nature that the individual could reasonably assert a claim to withhold from the public to avoid a clearly unwarranted invasion of privacy, including but not limited to information about the physical or mental health or the medical or psychiatric care or treatment of the individual, and that—

(1) Contain personal information not known to have been previously made public, and

(2) Relate to events less than 75 years old.

(b) *Restrictions*. Such records may be disclosed only:

(1) To those officers and employees of the agency that transferred the records to the National Archives who have a need for the record in the performance of their official duties;

(2) To those officers and employees of the agency that originated the information in the records who have a need for the records in the performance of their official duties;

(3) To researchers for the purpose of statistical or quantitative research when such researchers have provided the National Archives with adequate written assurance that the record will be used solely as a statistical research or reporting record and that no individually identifiable information will be disclosed; or

(4) To the subject individual or his duly authorized representative (the individual requesting access will be required to furnish reasonable and appropriate identification). Access will not be granted, however, to records containing the following categories of information:

(i) Investigatory material compiled for law enforcement purposes or for the purpose of determining suitability, eligibility, or qualifications for Federal civilian employment, military service, or Federal contracts if the identity of the source who furnished the information to the Government under an expressed or implied promise of confidentiality is revealed;

(ii) Evaluation material used to determine potential for promotion in the armed services if the identity of the source who furnished the information to the government under an expressed or implied promise of confidentiality is revealed; and

(iii) Security classified material.

(c) *Imposed by*. Archivist of the United States in accordance with 5 U.S.C. 552 and 44 U.S.C. 2108.

[48 FR 6541, Feb. 14, 1983. Redesignated at 50 FR 15723, Apr. 19, 1985]

§ 1256.18 Information related to law enforcement investigations.

(a) *Records*. Records compiled for law enforcement purposes.

(b) *Restrictions*. Such records may be disclosed only:

(1) If the release of the information does not interfere with enforcement proceedings, and

(2) If confidential sources and/or confidential information are not revealed, and

(3) If the release of the information would not constitute an unwarranted invasion of personal privacy, and

(4) If confidential investigation techniques are not described, and

(5) If the release of the information would not endanger the safety of law enforcement personnel, or

(6) If, in the judgment of the Archivist of the United States the passage of time is such that:

(i) The safety of persons is not endangered, and

(ii) The public interest in disclosure outweighs the continued need for confidentiality.

(c) *Imposed by*. Archivist of the United States in accordance with 5 U.S.C. 552 and 44 U.S.C. 2108.

[48 FR 6541, Feb. 14, 1983, as amended at 48 FR 45393, Oct. 5, 1983. Redesignated at 50 FR 15723, Apr. 19, 1985]

Subpart B—Specific Restrictions

§1256.40 Agency-imposed restrictions.

Some records in NARA legal custody are covered by restrictions imposed by the agency of origin that are in conformance with the Freedom of Information Act.

[50 FR 15727, Apr. 19, 1985]

Subpart C—Domestic Distribution of United States Information Agency Materials in the National Archives of the United States

SOURCE: 62 FR 31725, June 11, 1997, unless otherwise noted.

EFFECTIVE DATE NOTE: At 62 FR 31725, June 11, 1997, subpart C to part 1256 was added, effective July 11, 1997.

§1256.50 Scope of subpart.

This subpart prescribes procedures governing the public availability of audiovisual records and other materials subject to 22 U.S.C. 1461(b) that have been transferred to the National Archives of the United States by the United States Information Agency (USIA).

§1256.52 Purpose.

This subpart implements section 501 of the United States Information and Educational Exchange Act of 1948 (22 U.S.C. 1461), as amended by section 202 of Public Law 101–246 (104 Stat. 49, Feb. 16, 1990). This subpart prescribes procedures by which the public may inspect and obtain copies of USIA audiovisual records and other materials prepared for dissemination abroad that have been transferred to NARA for preservation and domestic distribution.

§1256.54 Definition.

For the purposes of this subpart—*Audiovisual records* mean motion picture films, videotapes, and sound recordings, and other materials regardless of physical form or characteristics that were prepared for dissemination abroad.

§1256.56 Transfer of USIA audiovisual records to NARA.

The provisions of 44 U.S.C. 2107 and 36 CFR part 1228 apply to the transfer of USIA audiovisual records to NARA, and to their deposit with the National Archives of the United States. At the time the audiovisual records are transferred to NARA, the Director of USIA, in accordance with §1228.184(e) of this chapter, will also transfer any production or title files bearing on the ownership of rights in the productions in connection with USIA's official overseas programming.

§1256.58 Domestic distribution of USIA audiovisual records transferred to NARA.

No USIA audiovisual records in the National Archives of the United States that were prepared for dissemination abroad will be available for copying until it has been at least 12 years since such materials were first disseminated abroad, or, in the case of materials prepared for foreign dissemination but not disseminated abroad, until it has been at least 12 years since the preparation of the materials.

(a) *Access to USIA audiovisual records that neither have copyright protection nor contain copyright material.* USIA audiovisual records prepared for dissemination abroad that NARA determines neither have copyright protection nor contain copyrighted material are available for examination and copying in accordance with the regulations set forth in parts 1252, 1253, 1254, 1256, and 1258 of this chapter. In determining

whether materials have copyright protection or contain copyrighted material, NARA will rely on information contained within or affixed to individual records (e.g., copyright notices); information contained within relevant USIA production, title, or other files that have been transferred to NARA by USIA; information provided by requesters pursuant to paragraph (b)(2) of this section (e.g., evidence from the Copyright Office that copyright has lapsed or expired); and information provided by copyright or license holders.

(b) *Reproduction of USIA audiovisual records that either have copyright protection or contain copyrighted material.*

(1) USIA audiovisual records prepared for dissemination abroad that NARA determines may have copyright protection or may contain copyrighted material will be made available for examination in NARA research facilities in accordance with the regulations set forth in this Title.

(2) Copies of USIA audiovisual records prepared for dissemination abroad that NARA determines may have copyright protection or may contain copyrighted material will be provided to persons seeking the release of such materials in the United States once NARA has:

(i) Ensured, in accordance with paragraph (b)(3) of this section, that the persons seeking copies have secured and paid for necessary United States rights and licenses;

(ii) Been provided with evidence from the Copyright Office sufficient to determine that copyright protection in the materials sought, or relevant portions therein, has lapsed or expired; or

(iii) Received a requester's signed certification in accordance with paragraph (b)(4) of this section that the materials sought will be used only for purposes permitted by the Copyright Act of 1976, as amended, including the fair use provisions of 17 U.S.C. 107. No copies of USIA audiovisual records will be provided until the fees authorized under part 1258 of this chapter have been paid to NARA.

(3) If NARA has determined that a USIA audiovisual record prepared for dissemination abroad may have copyright protection or may contain copyrighted material, persons seeking the release of such material in the United States may obtain copies of the material by submitting to NARA written evidence from all copyright and/or license owner(s) that any necessary fees have been paid or waived and any necessary licenses have been secured.

(4) If NARA has determined that a USIA audiovisual record prepared for dissemination abroad may have copyright protection or may contain copyrighted material, persons seeking the release of such material in the United States may obtain copies of the material by submitting to NARA the following certification statement:

> I, (printed name of individual), certify that my use of the copyrighted portions of the (name or title and NARA identifier of work involved) provided to me by the National Archives and Records Administration (NARA), will be limited to private study, scholarship, or research purposes, or for other purposes permitted by the Copyright Act of 1976, as amended. I understand that I am solely responsible for the subsequent use of the copyrighted portions of the work identified above.

(c) In every instance where a copy of an audiovisual record is provided under this subpart, and NARA has determined that the work being reproduced may have copyright protection or may contain copyrighted material, NARA shall provide a warning notice of copyright.

(d) Nothing in this section shall limit NARA's ability to make copies of USIA audiovisual records for preservation, arrangement, repair and rehabilitation, description, exhibition, security, or reference purposes.

§ 1256.60 Fees.

Copies or reproductions of audiovisual records will only be provided under this subpart upon payment of fees in accordance with 44 U.S.C. 2116(c) and 22 U.S.C. 1461(b)(3).

PART 1258—FEES

Sec.

1258.1 Authority.
1258.2 Applicability.
1258.4 Exclusions.
1258.6 Color reproductions.
1258.8 Copy negatives.
1258.10 Mail orders.

1258.11 Fees for reproduction of archival records in response to FOIA requests.
1258.12 Fee schedule.
1258.14 Payment of fees.
1258.16 Effective date.

AUTHORITY: 44 U.S.C. 2116(c).

§1258.1 Authority.

44 U.S.C. 2116(c) authorizes the charging of a fee for making or authenticating copies or reproductions of materials transferred to the Archivist's custody. Under 44 U.S.C. 2307 the Chairman, National Archives Trust Fund Board, is authorized to prepare and publish special works and collections of sources and to prepare, duplicate, edit, and release historical photographic materials and sound recordings and sell those publications and releases at a price that will cover their cost, plus 10 percent.

[40 FR 7926, Feb. 24, 1975. Redesignated and amended at 50 FR 15723, 15727, Apr. 19, 1985]

§1258.2 Applicability.

(a) Except as otherwise provided in this section, fees for the reproduction of NARA archival records, donated historical materials, and records filed with the Office of the Federal Register are as set forth in §1258.12. Some reproduction services listed in §1258.12 may not be available at all NARA facilities.

(b) The fees set forth in §1258.12 apply to reproduction of FRC records, except when NARA and the agency that transferred the records have agreed to apply that agency's fee schedule.

(c) The following categories are excluded from the fees set forth in §1258.12.

(1) National Archives Trust Fund Board publications, including microfilm publications. Prices are available from the Product Sales Section (NWPS), 700 Pennsylvania Ave., NW., Room G–9, Washington, DC 20408.

(2) [Reserved]

(3) Motion picture, sound recording, and video holdings of the National Archives and Presidential libraries. Information on the availability of and prices for reproduction of these materials are available from the Motion Picture, Sound, and Video Branch (NWDNM), 8601 Adelphi Rd., Room 3340, College Park, MD 20740–6001, or from the Presidential library which has such materials (see §1253.3 of this chapter for addresses).

(4) Electronic records. Information on the availability of and prices for duplication are available from the Center for Electronic Records (NWRE), 8601 Adelphi Rd., Room 5320, College Park, MD 20740–6001, or from the Presidential library which has such materials (see §1253.3 of this chapter for addresses).

(5) Still photography, including aerial film, and oversize maps and drawings. Information on the availability and prices of reproductions of records held in the Still Pictures Branch (NWDNS) and the Cartographic and Architectural Branch (NWDNC), both located at the National Archives at College Park facility, 8601 Adelphi Rd., College Park, MD 20740–6001, and in the Presidential libraries and regional records services facility (see §§1253.3 and 1253.7 of this chapter for addresses) should be obtained from the unit which has the original records.

(6) Reproduction of the following types of records using the specified order form:

(i) Military service files and pension files more than 75 years old (order form NATF Form 80). Reproduction of a military service file (or selected documents from the file if voluminous)—$10.

(ii) Passenger arrival lists (order form NATF Form 81)—$10.

(iii) Federal Census requests (order form NATF Form 82)—$6.

(iv) Eastern Cherokee applications to the Court of Claims (order form NATF Form 83)—$10.

(v) Land entry records (order form NATF Form 84)—$10.

(7) Reproductions of NARA administrative records made in response to FOIA requests under part 1250 of this chapter. Fees for such reproductions are found in §1250.40 of this chapter.

(8) Orders for expedited service (''rush'' orders) for reproduction of still pictures and motion picture and video recordings among the holdings of a Presidential library. Orders may be accepted on an expedited basis by the library when the library determines that sufficient personnel are available to

handle such orders or that the NARA contractor making the reproduction can provide the service. Rush orders are subject to a surcharge to cover the additional cost of providing expedited service.

(9) Orders requiring additional expense to meet unusual customer specifications such as the use of special techniques to make a photographic copy more legible than the original document, or unusual format or background requirement for negative microfilm. Fees for these orders are computed for each order.

[40 FR 7928, Feb. 24, 1975, as amended at 49 FR 9726, Mar. 15, 1984; 49 FR 42934, Oct. 25, 1984. Redesignated and amended at 50 FR 15723, 15727, Apr. 19, 1985; 52 FR 29521, Aug. 10, 1987; 53 FR 12151, Apr. 13, 1988; 53 FR 23760, June 24, 1988; 56 FR 3776, Jan. 31, 1991; 57 FR 21743, May 22, 1992; 60 FR 5580, Jan. 30, 1995; 62 FR 32203, June 13, 1997]

EFFECTIVE DATE NOTE: At 62 FR 32203, June 13, 1997, § 1258.2 was amended by revising paragraphs (c)(1) and (c)(3) through (c)(5), adding paragraph (c)(6)(v), and removing paragraph (c)(10), effective July 14, 1997. For the convenience of the user, the superseded text is set forth as follows:

§ 1258.2 Applicability.

* * * * *

(c) * * *

(1) National Archives publications, including microfilm publications. Prices are available from Publications Distribution (NECD), National Archives, Washington, DC 20408.

* * * * *

(3) Motion picture, sound recording, and video holdings of the National Archives and Presidential libraries. Prices for reproduction of these materials are available from the Motion Picture, Sound and Video Branch (NNSM), National Archives at College Park, 8601 Adelphi Road, College Park, MD 20740–6001, or from the Presidential library which has such materials (see § 1253.3 of this chapter for addresses).

(4) Machine-readable records. Prices for duplication are available from the Center for Electronic Records (NSX), National Archives at College Park, 8601 Adelphi Road, College Park, MD 20740–6001.

(5) Still photography, including aerial film, and oversize maps and drawings. Information on the availability and prices of reproductions of records held in the Still Pictures Branch (NNSP) and the Cartographic and Architectural Branch (NNSC), both located at the National Archives at College Park, 8601 Adelphi Road, College Park, MD 20740–6001, and in the Presidential libraries and regional archives (see §§ 1253.3 and 1253.7 of this chapter for addresses) should be obtained from the unit which has the original records.

* * * * *

(10) The fees for reproductions of archival records made in response to FOIA requests are set forth in § 1258.11.

§ 1258.4 Exclusions.

No fee is charged for reproduction or certification in the following instances:

(a) Documents furnished to other elements of the Federal Government. However, a fee may be charged if the appropriate director determines that the service cannot be performed without reimbursement.

(b) When NARA wishes to disseminate information about its activities to the general public through press, radio, television, and newsreel representatives;

(c) When the reproduction is to furnish the donor of a document or other gift with a copy of the original;

(d) When the reproduction is for individuals or associations having official voluntary or cooperative relations with NARA in its work;

(e) When the reproduction is for a foreign, State, or local government or an international agency and furnishing it without charge is an appropriate courtesy;

(f) For records center records only:

(1) When furnishing the service free conforms to generally established business custom, such as furnishing personal reference data to prospective employers of former Government employees;

(2) When the reproduction of not more than one copy of the document is required to obtain from the Government financial benefits to which the requesting person may be entitled (e.g., veterans or their dependents, employees with workmen's compensation claims, or persons insured by the Government);

(3) When the reproduction of not more than one copy of a hearing or

other formal proceeding involving security requirements for Federal employment is requested by a person directly concerned in the hearing or proceeding; and

(4) When the reproduction of not more than one copy of a document is for a person who has been required to furnish a personal document to the Government (e.g., a birth certificate required to be given to an agency where the original cannot be returned to the individual).

[40 FR 7928, Feb. 24, 1975. Redesignated at 50 FR 15723, Apr. 19, 1985, and amended at 50 FR 50905, Dec. 13, 1985; 57 FR 21743, May 22, 1992; 62 FR 32203, June 13, 1997]

EFFECTIVE DATE NOTE: At 62 FR 32203, June 13, 1997, § 1258.4 was amended by revising paragraph (f) introductory text, effective July 14, 1997. For the convenience of the user, the superseded text is set forth as follows:

§ 1258.4 Exclusions.

* * * * *

(f) For Federal records center (FRC) records only:

* * * * *

§ 1258.6 Color reproductions.

Color reproductions are furnished to the public and the Government only on a fee basis.

[40 FR 7928, Feb. 24, 1975. Redesignated at 50 FR 15723, Apr. 19, 1985]

§ 1258.8 Copy negatives.

Requests for photographs of materials for which no copy negative is on file are handled as follows:

(a) The cost of the negative shall be charged to the customer; except in cases where NARA wishes to retain the negative for its own use.

(b) When no fee is charged the negative becomes the property of NARA. When a fee is charged the negative becomes the property of the customer.

[40 FR 7928, Feb. 24, 1975. Redesignated at 50 FR 15723, Apr. 19, 1985]

§ 1258.10 Mail orders.

(a) There is a minimum fee of $10 per order for reproductions which are sent by mail to the customer.

(b) Orders to addresses in the United States are sent either first class or UPS depending on the weight of the order and availability of UPS service. When a customer requests special mailing services (such as Express Mail or registered mail) and/or shipment to a foreign address, the cost of the special service and/or additional postage for foreign mail is added to the cost of the reproductions.

[49 FR 9726, Mar. 15, 1984. Redesignated at 50 FR 15723, Apr. 19, 1985, and amended at 56 FR 3777, Jan. 31, 1991; 62 FR 32203, June 13, 1997]

EFFECTIVE DATE NOTE: At 62 FR 32203, June 13, 1997, § 1258.10 was amended by revising paragraph (a), effective July 14, 1997. For the convenience of the user, the superseded text is set forth as follows:

§ 1258.10 Mail orders.

(a) There is a minimum fee of $6.00 per order for reproductions which are sent by mail to the customer.

* * * * *

§ 1258.11 Fees for reproduction of archival records in response to FOIA requests.

(a) *Electrostatic copies.* (1) Paper to paper copies (up to 11 in. by 17 in.):

NARA makes the copy	$0.25
Customer makes the copy on a NARA self-service copier	$0.10

(2) Oversized electrostatic copies (per foot): $1.80 (plus $0.20 per foot for vellum paper)

(b) *Other processes.* Fees for other reproduction processes not listed in § 1258.11 are computed upon request.

[56 FR 3777, Jan. 31, 1991]

EFFECTIVE DATE NOTE: At 62 FR 32203, June 13, 1997, § 1258.11 was removed, effective July 14, 1997.

§ 1258.12 Fee schedule.

(a) *Certification:* $10.

(b) *Electrostatic copying:* (1) Paper-to-paper copies (up to and including 11 in. by 17 in.) made by the customer on a NARA self-service copier: $0.10 per copy.

(2) Paper-to-paper copies (up to and including 11 in. by 17 in.) made by NARA staff:

(i) At a Presidential library; at a regional records services facility; and,

when ordered on a same-day ''cash and carry'' basis, at a Washington, DC, area facility: $0.50 per copy.

(ii) All other orders placed at a Washington, DC, area facility: $10 for the first 1–20 copies; $5 for each additional block of up to 20 copies.

(3) Oversized electrostatic copies (per linear foot): $2.50.

(4) Electrostatic copies (22 in. by 34 in.): $2.50.

(5) Microfilm or microfiche to paper copies made by the customer on a NARA self-service copier: $0.25.

(6) Microfilm or microfiche to paper copies made by NARA staff: $1.75.

(c) *Microfilm.* (1) Original negative microfilm (paper-to-microfilm): $10 for the first 1–15 images; $14 for each additional block of up to 20 pages.

(2) Direct duplicate copy of accessioned microfilm: $34.00 per roll.

(3) Positive copy of accessioned microfilm: $34.00 per roll.

(d) *Diazo microfiche duplication (per fiche):* $2.10.

(e) *Self-service video copying in the Motion Picture, Sound and Video Research Room:* (1) Initial 90-min use of video copying station with 120-minute videocassette: $20.

(2) Additional 90-minute use of video copying station with no videocassette: $14.

(3) Blank 120-minute VHS videocassette: $6.

(f) *Self-service Polaroid prints:* $9 per print.

(g) *Preservation of records.* In order to preserve certain records which are in poor physical condition, NARA may restrict customers to microfilm copies instead of electrostatic copies.

(h) *Unlisted processes.* Fees for reproduction processes not listed in § 1258.12 are computed upon request.

[56 FR 3777, Jan. 31, 1991; 56 FR 5652, Feb. 12, 1991, as amended at 57 FR 21743, May 22, 1992; 57 FR 46306, Oct. 8, 1992; 60 FR 5580, Jan. 30, 1995; 62 FR 32204, June 13, 1997]

EFFECTIVE DATE NOTE: At 62 FR 32204, June 13, 1997, § 1258.12 was amended by revising paragraphs (a) through (f), removing paragraph (g), and redesignating paragraphs (h) and (i) as paragraphs (g) and (h), respectively, effective July 14, 1997. For the convenience of the user, the superseded text is set forth as follows:

§ 1258.12 Fee schedule.

(a) *Certification*: $2.00.

(b) [Reserved]

(c) *Electrostatic copying:* (1) Paper to paper (up to 11 in. by 17 in.):

Customer makes the copy at a NARA self-service copier	$0.10
NARA makes the copy	.25

(2) Oversized electrostatic copies (per foot): $1.80. Add per foot for vellum paper: .20.

(3) Electrostatic copies (22 in. by 34 in.): $1.50.

(4) Red-line copies: $1.30.

(5) Microfilm or microfiche to paper copies (up to 11 in. by 17 in.):

Customer makes the copy at a NARA self-service copier	$0.25
NARA makes the copy	$1.00

(6) Microfilm to paper copies (18 in. by 24 in.):

Customer makes the copy at a NARA self-service copier	$0.90
NARA makes the copy	$1.55

(d) *Microfilm:*

	16mm	35mm
(1) Camera negative (per frame) ..	$0.32	$0.33
(2) Positive (per foot)	.30	.30
(3) Direct duplicate negative (per foot)	.30	.30

(e) *Diazo microfiche duplication (per fiche):* $1.25

(f) *Technical services:*

	Regular	Overtime
Photographer (per hour)	$15.00	$22.50
Microfilm preparation (per hour)	12.25	18.50
Sound & video recordings (per hour) ..	16.50	24.75

(g) *Self-service video copying in the Motion Picture, Sound and Video Research Room:*

(1) Initial 90-minute use of video copying station with 120-minute videocassette: $15.25.

(2) Additional 90-minute use of video copying station with no videocassette: $8.75.

(3) Blank 120-minute videocassette: $6.75.

* * * * *

§ 1258.14 Payment of fees.

Fees may be paid in cash, by check or money order made payable to the National Archives Trust Fund, or by selected credit cards. Remittances from outside the United States must be made by international money order payable in U.S. dollars or a check drawn on a U.S. bank. Fees must be

paid in advance except when the appropriate director approves a request for handling them on an account receivable basis. Purchasers with special billing requirements must state them when placing orders and must complete any special forms for NARA approval in advance.

[57 FR 21743, May 22, 1992]

§1258.16 Effective date.

The fees in §1258.12 are effective on July 14, 1997.

[62 FR 32204, June 13, 1997]

EFFECTIVE DATE NOTE: At 62 FR 32204, June 13, 1997, §1258.16 was revised, effective July 14, 1997. For the convenience of the user, the superseded text follows:

§1258.16 Effective date.

The fees in §§1258.11 and 1258.12 are effective on March 1, 1991.

[56 FR 3777, Jan. 31, 1991]

SUBCHAPTER D—DECLASSIFICATION

PART 1260—DECLASSIFICATION OF AND PUBLIC ACCESS TO NATIONAL SECURITY INFORMATION

Sec.
1260.1 Scope of part.
1260.2 Declassification responsibility.
1260.4 Agency liaison.

Subpart A—Mandatory Review of Classified U.S. Government Originated Information and Foreign Government Information Provided to the United States in Confidence

1260.10 NARA action.
1260.12 Agency action.

Subpart B—[Reserved]

Subpart C—Mandatory Review of Classified Information Originated by a Defunct Agency or Received by a Defunct Agency From a Foreign Government

1260.30 NARA action.
1260.32 Agency action.

Subpart D—Mandatory Review of Classified White House Originated Information and Foreign Government Information Received or Classified in the White House Less Than 30 Years Old

1260.40 Information subject to mandatory review.
1260.42 NARA action.
1260.44 NARA appellate action.
1260.46 Agency action.

Subpart E—Mandatory Review of Classified White House Information More Than 30 Years Old

1260.50 Mandatory review of classified White House originated information and foreign government information received by or classified in the White House more than 30 years old.

Subpart F—Other Mandatory Review

1260.60 Mandatory review of classified White House information in the custody of other agencies.

Subpart G—Requests for Reclassification of Information

1260.70 Information originated by or under the declassification jurisdiction of Federal agencies.
1260.72 Information originated in the White House and under the declassification jurisdiction of the Archivist.
1260.74 Appeals.

AUTHORITY: 44 U.S.C. 2104(a); Executive Order 12356 of April 2, 1982 (3 CFR 1982 Comp., p. 166).

SOURCE: 49 FR 1344, Jan. 11. 1984, unless otherwise noted. Redesignated at 50 FR 15723, Apr. 19, 1985.

§ 1260.1 Scope of part.

(a) Declassification of and public access to national security information and material (hereafter referred to as ''classified information'' or collectively termed ''information'') is governed by Executive Order 12356 of April 2, 1982 (47 FR 14874, 3 CFR 1982 Comp, p. 166) and by the Information Security Oversight Office Directive Number 1 of June 22, 1982 (47 FR 27836, June 25, 1982).

(b) Documents declassified in accordance with this regulation may be withheld from release under the provisions of 5 U.S.C. 552(b) for accessioned agency records; 36 CFR 1254.36 for donated historical materials; 44 U.S.C. 2201 et seq. and 36 CFR part 1270 for Presidential records; and 44 U.S.C. 2111 note and 36 CFR part 1275 for Nixon Presidential materials. Procedures for public requests for mandatory review of classified information under Executive Order 12356 are found in § 1254.46 of this chapter.

[57 FR 21744, May 22, 1992]

§ 1260.2 Declassification responsibility.

(a) *Classified U.S. Government originated information less than 30 years old.* Declassification of U.S. Government originated information less than 30 years old is the responsibility of the agency that originated the information.

(b) *Foreign government information provided to the United States in confidence and less than 30 years old.* Declassification of foreign government information (provided to the U.S. in confidence) less than 30 years old, is the responsibility of the agency that initially received or classified the foreign government information in consultation with concerned agencies. NARA may make a declassification determination on foreign government information less than 30 years old only when the responsible agency has specifically authorized this action.

(c) *Classified U.S. Government originated information and foreign government information provided in confidence more than 30 years old.* Systematic reviews of U.S. Government originated information and foreign government information (provided to the U.S. in confidence) more than 30 years old (except for intelligence file series described in paragraph (d) of this section) accessioned into the National Archives or donated to the Government are the responsibility of NARA. NARA shall conduct systematic declassification reviews in accordance with guidelines provided by the head of the originating agency or, with respect to foreign government information, in accordance with guidelines provided by the head of the agency having declassification jurisdiction over the information. If no guidelines for review of foreign government information have been provided by the agency heads, the Director of the Information Security Oversight Office, after coordinating with the agencies having declassification authority over the information, shall issue general guidelines for systematic declassification reviews. With respect to the systematic reviews of Presidential papers or records, guidelines shall be developed by the Archivist of the United States and approved by the National Security Council.

(d) *Classified U.S. Government originated information concerning intelligence and cryptology.* Systematic reviews of file series of accessioned records and presidential papers or records concerning intelligence activities (including special activities), or intelligence sources or methods, and cryptology created after 1945, shall be conducted as the records become 50 years old. NARA shall conduct systematic declassification reviews in accordance with guidlines provided by the Director of the Central Intelligence Agency concerning information on intelligence activities and intelligence sources and methods, and by the Secretary of Defense concerning cryptologic information.

(e) *White House information.* Declassification of information from a previous administration which was originated by the President; by the White House staff; by committees, commission, or boards appointed by the President; or by others specifically providing advice and counsel to a President or acting on behalf of the President (hereinafter referred to as ''White House information'') is the responsibility of the Archivist of the United States. Declassification determinations will be made after consultation with agencies having primary subject matter interest and will be consistent with the provisions of applicable laws or lawful agreements.

(f) *Information orginated by a defunct agency.* NARA is responsible for declassification of all information in the custody of NARA originated by an agency that has ceased to exist and whose functions have not been transferred to another agency and of all foreign government information originally received or classified by such an agency. NARA shall make declassification determinations after consultation with all agencies having primary subject matter interest.

[49 FR 1349, Jan. 11, 1984. Redesignated at 50 FR 15723, Apr. 19, 1985 and 51 FR 22076, June 18, 1986. Further redesignated at 59 FR 29194, June 6, 1994]

§1260.4 Agency liaison.

To ensure that NARA will be able to respond promptly to mandatory review requests and appeals from denials, the head of each agency shall be requested to provide NARA with the current name, title, and address of the agency's designated mandatory review and appellate authority.

[49 FR 1344, Jan. 11, 1984. Redesignated and amended at 50 FR 15723, 15727, Apr. 19, 1985]

Subpart A—Mandatory Review of Classified U.S. Government Originated Information and Foreign Government Information Provided to the United States in Confidence

§ 1260.10 NARA action.

(a) *Information less than 30 years old.* NARA shall promptly acknowledge receipt of a request for mandatory review of classified U.S. Government originated information, and within 30 calendar days of receipt of the request, shall forward the request, with copies of the documents containing the requested information, to the agency that originated the information or to the agency that the Archivist determines has primary subject matter interest. With respect to foreign government information, the request and copies of the documents shall be forwarded to the agency which initially received or classified the information. If unable to identify that agency, NARA shall forward the request to the agency which has primary subject matter interest. NARA shall inform the requester that referrals have been made to the appropriate Government agency.

(b) *Information more than 30 years old.* NARA shall acknowledge receipt of a request for mandatory review of classified U.S. Government originated information or foreign government information which NARA may review for declassification using systematic review guidelines, and within 60 days of receipt of the request shall act upon it and notify the requester of the action taken. If additional time is necessary to make a declassification determination, NARA shall notify the requester of the time needed to process the request. Except in unusual circumstances, NARA will make a final determination within 1 year of the receipt of the request. Information which NARA may not declassify using the systematic review guidelines will be promptly forwarded, with copies of the documents containing the requested information, to the responsible agency. NARA shall inform the requester that referrals have been made to the appropriate Government agency.

[51 FR 22076, June 18, 1986]

§ 1260.12 Agency action.

Upon receipt of a request for mandatory review of classified U.S. Government originated information or foreign government information forwarded by NARA, the originating or responsible agency shall:

(a) Either make a prompt declassification determination and notify NARA accordingly, or inform NARA of the additional time needed to process the request. NARA will inform the requester of the agency action. Except in unusual circumstances, agencies shall make a final determination within one year.

(b) Notify NARA of any other agency to which it forwarded the request in those cases requiring the declassification determination of another agency.

(c) Return to NARA a complete copy of each declassified document with the agency determination. NARA will forward the reproduction to the requester. When a request cannot be declassified in its entirety, the agency must also furnish NARA, for transmission to the requester, the following:

(1) A brief statement of the reasons the requested information cannot be declassified; and

(2) A statement of the requester's right to appeal within 60 calendar days of receipt of the denial; the procedures for taking such action; and the name, title, and address of the appeal authority.

(d) The agency appellate authority shall make a determination within 30 working days following receipt of an appeal. If additional time is required to make a determination, the agency appellate authority shall notify NARA of the additional time needed and the reason for the extension. The agency appellate authority shall notify NARA in writing of the final determination and of the reasons for any denial. NARA will provide the researcher a copy of any notifications.

(e) Furnish to NARA a complete copy of each document to be released only in part, clearly marked to indicate the portions which remain classified.

[49 FR 1344, Jan. 11, 1984. Redesignated at 50 FR 15723, Apr. 19, 1985, and amended at 51 FR 22077, June 18, 1986; 57 FR 21744, May 22, 1992]

Subpart B—[Reserved]

Subpart C—Mandatory Review of Classified Information Originated by a Defunct Agency or Received by a Defunct Agency From a Foreign Government

§1260.30 NARA action.

NARA is responsible for declassification of all information in the custody of NARA originated by an agency which has ceased to exist and whose functions have not been transferred to another agency and of all foreign government information originally received or classified by such an agency. NARA will promptly acknowledge receipt of requests for such information, review the information using applicable systematic review guidelines, and, when necessary, consult with any agency having primary subject matter interest. NARA shall either make a prompt declassification determination and notify the requester accordingly, or inform the requester of the additional time needed to process the request. Except in unusual circumstances NARA shall make a final determination within one year. If the request is denied in whole or in part, the Assistant Archivist for the National Archives or the Assistant Archivist for Presidential Libraries will furnish the requester a brief statement of the reasons for denial and a notice of the right to appeal the determination within 60 calendar days to the Deputy Archivist of the United States (mailing address: National Archives (ND), Washington, DC 20408). Upon receipt of an appeal the Deputy Archivist shall, within 30 working days:

(a) Review the previous decision made to deny the information and, as necessary;

(b) Consult with the appellate authorities in any agency having primary subject matter interest in the information previously denied; and

(c) Notify the requester of the determination and make available to the requester any additional information that has been declassified as a result of the appeal.

§1260.32 Agency action.

Upon receipt of a request forwarded by NARA for consultation regarding the declassification of information originated by a defunct agency or of foreign government information originally received or classified by a defunct agency, the agency with primary subject matter interest shall:

(a) Advise the Archivist whether the information should be declassified in whole or in part or should continue to be exempt from declassification; and

(b) Return the request to NARA along with a brief statement of the reasons any requested information should not be declassified.

Subpart D—Mandatory Review of Classified White House Originated Information and Foreign Government Information Received or Classified in the White House Less Than 30 Years Old

§1260.40 Information subject to mandatory review.

Information originated by a President, the White House staff, by committees, commissions, or boards appointed by a President, or others specifically providing advice and counsel to a President or acting on behalf of a President (hereafter cited as White House originated information) is subject to mandatory review consistent with the provisions of applicable laws or lawful agreements that pertain to the respective Presidential papers or records. Unless precluded by such laws or agreements, White House originated information is subject to mandatory review 10 years after the close of the administration which created the materials or when the materials have been archivally processed, whichever occurs first.

[49 FR 1344, Jan. 11, 1984. Redesignated and amended at 50 FR 15723, 15728, Apr. 19, 1985

§1260.42 NARA action.

(a) NARA shall promptly acknowledge receipt of a request for mandatory review of such classified White House originated information and foreign

government information received or classified in the White House.

(b) NARA will review the requested information, determine which agencies have primary subject matter interest, forward to those agencies copies of material containing the requested information, and request their recommendations regarding declassification.

(c) NARA will review the recommendations returned by the agencies and make its declassification determination within one year of receipt of the request, except in unusual circumstances.

(d) When the request cannot be declassified in its entirety, NARA will furnish the requester:

(1) A brief statement of the reasons the requested information cannot be declassified;

(2) Access to those portions of documents releasable only in part that constitute a coherent segment; and

(3) A notice of the right to appeal the determination within 60 calendar days to the Deputy Archivist of the United States (mailing address: National Archives (ND), Washington, DC 20408).

§ 1260.44 NARA appellate process.

Upon receipt of an appeal, the Deputy Archivist shall within 30 working days:

(a) Review the decision made to deny the information;

(b) Consult with the appellate authorities in agencies having primary subject matter interest in the information previously denied;

(c) Notify the requester of the determination and make available to the requester any additional information which has been declassified as a result of the appeal; and

(d) Notify the requester of the right to appeal denials of access to the Director, Information Security Oversight Office (mailing address: General Services Administration (Z), Washington, DC 20405).

§ 1260.46 Agency action.

Upon receipt of a request forwarded by NARA for consultation regarding declassification of White House originated information and foreign government information received by or classified in the White House, the agency with primary subject matter interest shall:

(a) Advise the Archivist whether the information should be declassified in whole or in part or should continue to be exempt from declassification; and

(b) Provide a brief statement of the reasons any requested information should not be declassified and return a complete copy of the reproductions to NARA; and

(c) Return all reproductions referred for consultation including a complete copy of each document which should be released only in part, clearly marked to indicate the portions which remain classified.

[49 FR 1344, Jan. 11, 1984, as amended at 57 FR 21744, May 22, 1992]

Subpart E—Mandatory Review of Classified White House Information More Than 30 Years Old

§ 1260.50 Mandatory review of classified White House originated information and foreign government information received by or classified in the White House more than 30 years old.

(a) NARA shall promptly acknowledge the receipt of a request for mandatory review of classified White House originated information and foreign government information received by or classified in the White House more than 30 years old, and shall act upon that request within 60 calendar days. If additional time is necessary to make a declassification determination, NARA shall notify the requester of the time needed to process the request. NARA will make a final determination within 1 year of the receipt of the request, except in unusual circumstances.

(b) NARA shall review the information using applicable systematic review guidelines and will make available to the requester information declassified using those guidelines.

(c) Information which cannot be declassified by NARA using systematic review guidelines will be promptly forwarded to the agencies with primary subject matter interest and further processed in accordance with § 1260.42(b) through (d) and §§ 1260.44 through 1260.46.

Subpart F—Other Mandatory Review

§1260.60 Mandatory review of classified White House information in the custody of other agencies.

Agencies having custody of classified White House information of a previous administration shall forward requests for mandatory review of such information to the Office of the National Archives (mailing address: National Archives (NND), Washington, DC 20408) together with copies of documents containing the requested information and the agency's recommendations regarding declassification. NARA will make a declassification determination on such requests after consulting with any other agency with primary subject matter interest and will reply to the requester. If the request is denied in whole or in part, the requester may appeal within 60 calendar days of receipt of the denial to the Deputy Archivist of the United States (mailing address: National Archives (ND), Washington, DC 20408). Appeals are processed in accordance to the procedures listed in §1260.44.

Subpart G—Requests for Reclassification of Information

§1260.70 Information originated by or under the declassification jurisdiction of Federal agencies.

An agency may request NARA to temporarily close, re-review, and possibly reclassify records and donated historical materials originated by the agency which were declassified in accordance with E.O. 12356 or predecessor Orders. The agency shall submit the request in writing to the Assistant Archivist for the National Archives (NN) or to the Assistant Archivist for Presidential Libraries (NL) (mailing address: National Archives (NL), Washington, DC 20408). If the urgency of the matter precludes a written request, an authorized agency official may make a preliminary request by telephone. A written request shall follow the oral request within 5 workdays. In the request the authorized agency official shall:

(a) Identify the records or donated historical materials involved as specifically as possible;

(b) Explain the reason the agency believes a re-review and possible reclassification may be necessary in the interest of national security; and

(c) Provide any information the agency may have concerning any previous public disclosure of the information in the records or donated historical materials.

§1260.72 Information originated in the White House and under the declassification jurisdiction of the Archivist.

Requests from agencies to re-review and possibly reclassify information originated by a President; the White House staff; committees commissions, or boards appointed by the President; or others specifically providing advice and counsel to a President or acting on behalf of a President and which has been declassified and disclosed shall be submitted in writing to the Archivist of the United States. In the request the authorized agency official shall:

(a) Specifically identify the record or donated historical material;

(b) Explain the reason the agency believes a re-review and possible reclassification may be necessary in the interest of national security; and

(c) Provide any information the agency may have concerning the public disclosure of the information in the records or donated historical material.

§1260.74 Appeals.

NARA may appeal to the Director, Information Security Oversight Office, any re-review or reclassification request from an agency when, in the Archivist's opinion, the facts of previous disclosure suggest that such action is unwarranted or unjustified.

SUBCHAPTER E—PRESIDENTIAL RECORDS

PART 1270—PRESIDENTIAL RECORDS

Subpart A—General Provisions

Sec.
1270.10 Scope of part.
1270.12 Application.
1270.14 Definitions.

Subpart B—Actions Taken on Behalf of Former Presidents

1270.20 Designation of person or persons to act for former President.
1270.22 When Archivist may act for former President.

Subpart C—Disposal of Presidential Records

1270.30 Disposal of Presidential Records by incumbent President.
1270.32 Disposal of Presidential Records in the custody of the Archivist.

Subpart D—Access to Presidential Records

1270.40 Identification of restricted records.
1270.42 Denial of access to public; right to appeal.
1270.44 Exceptions to restricted access.
1270.46 Notice of intent to disclose Presidential Records.

Subpart E—Presidential Records Compiled for Law Enforcement Purposes

1270.50 Consultation with law enforcement agencies.

AUTHORITY: The Presidential Records Act of 1978, Pub. L. 95–591, 92 Stat. 2523–27, as amended by the National Archives and Records Administration Act of 1984, Pub. L. 98–497, sec. 107(b)(7), 98 Stat. 2287 (1984) (codified at 44 U.S.C. 2201–07).

SOURCE: 53 FR 50404, Dec. 15, 1988, unless otherwise noted.

Subpart A—General Provisions

§ 1270.10 Scope of part.

These regulations implement the provisions of the Presidential Records Act of 1978, Pub. L. No. 95–591, 92 Stat. 2523–27, as amended by Pub. L. No. 98–497, sec. 107(b)(7), 98 Stat. 2287 (1984) (codified at 44 U.S.C. 2201–07), by setting forth the policies and procedures governing preservation, protection, and disposal of, and access to Presidential and Vice-Presidential records created during a term of office of the President or Vice President beginning on or after January 20, 1981. Nothing in these regulations is intended to govern procedures for assertion of, or response to, any constitutionally based privilege which may be available to an incumbent or former President.

§ 1270.12 Application.

(a) These regulations apply to all Presidential records created during a term of office of the President beginning on or after January 20, 1981.

(b) Vice-Presidential records shall be subject to the provisions of this part in the same manner as Presidential records. The Vice President's duties and responsibilities, with respect to Vice-Presidential records, shall be the same as the President's duties and responsibilities with respect to Presidential records. The Archivist's authority with respect to Vice-Presidential records shall be the same as the Archivist's authority with respect to Presidential records, except that the Archivist may, when he determines it to be in the public interest, enter into an agreement with a non-Federal archival repository for the deposit of Vice-Presidential records.

§ 1270.14 Definitions.

For the purposes of this part—

(a) The terms *documentary material, Presidential records, personal records, Archivist,* and *former President* have the meanings given them by 44 U.S.C. 2201 (1)–(5), respectively.

(b) The term *agency* has the meaning given it by 5 U.S.C. 551(1) (A)–(D) and 552(f).

(c) The term *Presidential archival depository* has the meaning given it by 44 U.S.C. 2101(1).

(d) The term *Vice-Presidential records* means documentary materials, or any reasonably segregable portion thereof, created or received by the Vice President, his immediate staff, or a unit or individual of the Office of the Vice President whose function is to advise and assist the Vice President, in the

course of conducting activities which relate to or have an effect upon the carrying out of the constitutional, statutory, or other official or ceremonial duties of the Vice President. The term includes documentary materials of the kind included under the term *Presidential records*.

(e) The term *filed* means the date something is received in the office of the official to whom it is addressed.

Subpart B—Actions Taken on Behalf of Former Presidents

§1270.20 Designation of person or persons to act for former President.

(a) A President or former President may designate some person or persons to exercise, upon death or disability of the President or former President, any or all of the discretion or authority granted to the President or former President by chapter 22 of title 44 U.S.C.

(b) When a President or former President designates a person or persons to act for him pursuant to paragraph (a) of this section, this designation shall be effective only if the Archivist has received notice of the designation before the President or former President dies or is disabled.

(c) The notice required by paragraph (b) of this section shall be in writing, and shall include the following information:

(1) Name(s) of the person or persons designated to act for the President or former President;

(2) The current addresses of the person or persons designated; and

(3) The records, identified with reasonable specificity, over which the designee(s) will exercise discretion or authority.

§1270.22 When Archivist may act for former President.

In those instances where a President has specified, in accordance with 44 U.S.C. 2204(a), restrictions on access to Presidential records, but has not made a designation under §1270.20 of this subpart, the Archivist shall, upon the death or disability of a President or former President, exercise the discretion or authority granted to a President or former President by 44 U.S.C. 2204.

Subpart C—Disposal of Presidential Records

§1270.30 Disposal of Presidential records by incumbent President.

A President may, while in office, dispose of any Presidential records which in his opinion lack administrative, historical, informational, or evidentiary value if one of the following two sets of requirements is satisfied:

(a)(1) The President has obtained the written views of the Archivist concerning the proposed disposal; and

(2) The Archivist states in his written views to the President that he does not intend to request, with respect to the President's proposed disposal of Presidential records, the advice of the Committees on Rules and Administration and Governmental Affairs of the Senate, and the Committees on House Administration and Government Operations of the House of Representatives because he does not consider—

(i) The records proposed for disposal to be of special interest to the Congress; or

(ii) Consultation with the Congress concerning the proposed disposal to be in the public interest; or

(b)(1) The President has obtained the written views of the Archivist concerning the proposed disposal;

(2) The Archivist states in his written views either—

(i) That the records proposed for disposal may be of special interest to the Congress; or

(ii) That consultation with the Congress concerning the proposed disposal is in the public interest; and

(3) The President submits copies of the proposed disposal schedule to the Committees on Rules and Administration and Governmental Affairs of the Senate and the Committees on House Administration and Government Operations of the House of Representatives at least 60 calendar days of continuous session of Congress in advance of the proposed disposal date. For the purpose of this section, continuity of session is broken only by an adjournment of Congress *sine die*, and the days on which either House is not in session because of

an adjournment of more than 3 days to a day certain are excluded in the computation of the days in which Congress is in continuous session.

§ 1270.32 Disposal of Presidential Records in the custody of the Archivist.

(a) The Archivist may dispose of Presidential records which he has appraised and determined to have insufficient administrative, historical, informational, or evidentiary value to warrant their continued preservation.

(b) When Presidential records are scheduled for disposal pursuant to paragraph (a) of this section, the Archivist shall publish a notice of this disposal in the FEDERAL REGISTER at least 60 days before the proposed disposal date.

(c) The notice required by paragraph (b) of this section, shall include the following:

(1) A reasonably specific description of the records scheduled for disposal; and

(2) A concise statement of the reason for disposal of the records.

(d) Publication in the FEDERAL REGISTER of the notice required by paragraph (b) of this section shall constitute a final agency action for purposes of review under chapter 7 of title 5 U.S.C. (5 U.S.C. 701–706).

Subpart D—Access to Presidential Records

§ 1270.40 Identification of restricted records.

(a) If a President, prior to the conclusion of his term of office or last consecutive term of office, as the case may be, specifies durations, not to exceed 12 years, for which access to certain information contained in Presidential records shall be restricted, in accordance with 44 U.S.C. 2204, the Archivist or his designee shall identify the Presidential records affected, or any reasonably segregable portion thereof, in consultation with that President or his designated representative(s).

(b) The Archivist shall restrict public access to the information contained in those records identified as affected until—

(1) The date on which the former President waives the restriction on disclosure of the record or information contained within;

(2) The expiration of the period of restriction specified under 44 U.S.C. 2204(a) for the category of information under which a certain record, or a portion thereof, was restricted; or

(3) The Archivist has determined that the former President or an agent of the former President has placed in the public domain through publication a restricted record or a reasonably segregable portion thereof, if this date is earlier than either of the dates specified in paragraph (b)(1) or (2) of this section.

§ 1270.42 Denial of access to public; right to appeal.

(a) Any person denied access to a Presidential record (hereinafter *the requester*) because of a determination that the record or a reasonably segregable portion thereof was (1) properly restricted under 44 U.S.C. 2204(a), and (2) not placed in the public domain by the former President or his agent, may file an administrative appeal with the Assistant Archivist for Presidential Libraries (NL), Washington, DC 20408.

(b) Appeals shall be filed no later than 10 working days after the requester receives written notification that access to Presidential records has been denied.

(c) Appeals shall be in writing and shall set forth the reason(s) why the requester believes access to the records sought should be allowed. The requester shall identify the specific records sought.

(d) Upon receipt of an appeal, the Assistant Archivist for Presidential Libraries shall have 30 working days from the date an appeal is filed to consider the appeal and to respond in writing to the requester. The Assistant Archivist's response shall state whether or not the Presidential records requested are to be released and the basis for this determination. The decision of the Assistant Archivist to withhold release of Presidential records is final and not subject to judicial review.

§1270.44 Exceptions to restricted access.

(a) Notwithstanding any restrictions on access imposed pursuant to section 2204 or these regulations, and subject to any rights, defenses, or privileges which the United States or any agency or person may invoke, Presidential records shall be made available in the following instances:

(1) Pursuant to subpoena or other judicial process properly issued by a court of competent jurisdiction for the purposes of any civil or criminal investigation or proceeding;

(2) To an incumbent President if the records sought contain information which is needed for the conduct of current business of his office and is not otherwise available;

(3) To either House of Congress, or, to the extent of matter within its jurisdiction, to a Congressional committee or subcommittee if the records sought contain information which is needed for the conduct of business within its jurisdiction and is not otherwise available.

(b) Requests by an incumbent President, a House of Congress, or a Congressional committee or subcommittee pursuant to paragraph (a) of this section shall be addressed to the Archivist. All requests shall be in writing and, where practicable, identify the records sought with reasonable specificity.

(c) Presidential records of a former President shall be available to the former President or his designated representative upon request.

§1270.46 Notice of intent to disclose Presidential records.

(a) The Archivist or his designee shall notify a former President or his designated representative(s) before any Presidential records of his Administration are disclosed.

(b)(1) The notice given by the Archivist or his designee shall:

(i) Be in writing;

(ii) Identify the particular records with reasonable specificity;

(iii) State the reason for the disclosure; and

(iv) Specify the date on which the record will be disclosed.

(2) In the case of records to be disclosed in accordance with §1270.44, the notice shall also:

(i) Identify the requester and the nature of the request;

(ii) Specify whether the requested records contain materials to which access would otherwise be restricted pursuant to 44 U.S.C. 2204(a) and identify the category of restriction within which the record to be disclosed falls; and

(iii) Specify the date of the request.

(c) If, after receiving the notice required by paragraph (a) of this section, a former President raises rights or privileges which he believes should preclude the disclosure of a Presidential record, and the Archivist nevertheless determines that the record in question should be disclosed, in whole or in part, the Archivist shall notify the former President or his representative of this determination. The notice given by the Archivist or his designee shall:

(1) Be in writing;

(2) State the basis upon which the determination to disclose the record is made; and

(3) Specify the date on which the record will be disclosed.

(d) The Archivist shall not disclose any records covered by any notice required by paragraph (a) or (c) of this section for at least 30 calendar days from receipt of the notice by the former President, unless a shorter time period is required by a demand for Presidential records under §1270.44.

(e) Copies of all notices provided to former Presidents under this section shall be provided at the same time to the incumbent President.

Subpart E—Presidential Records Compiled for Law Enforcement Purposes

§1270.50 Consultation with law enforcement agencies.

(a) For the processing of Presidential records compiled for law enforcement purposes that may be subject to 5 U.S.C. 552(b)(7), the Archivist shall request specific guidance from the appropriate Federal agency on the proper treatment of a record if there is no general guidance applicable, if the record is particularly sensitive, or if

the type of record or information is widespread throughout the files.

(b) When specific agency guidance is requested under paragraph (a) of this section, the Archivist shall notify the appropriate Federal agency of the decision regarding disclosure of the specific documents. Notice shall include the following:

(1) A description of the records in question;

(2) Statements that the records described contain information compiled for law enforcement purposes and may be subject to the exemption provided by 5 U.S.C. 552(b)(7) for records of this type; and,

(3) The name of a contact person at NARA.

(c) Agency guidance under this section is not binding on the Archivist. The final determination on whether Presidential records may be subject to the exemption in 5 U.S.C. 552(b)(7) is the Archivist's responsibility.

SUBCHAPTER F—NIXON PRESIDENTIAL MATERIALS

PART 1275—PRESERVATION AND PROTECTION OF AND ACCESS TO THE PRESIDENTIAL HISTORICAL MATERIALS OF THE NIXON ADMINISTRATION

Sec.
1275.1 Scope of part.

Subpart A—General Provisions

1275.10 Purpose.
1275.12 Application.
1275.14 Legal custody.
1275.16 Definitions.
1275.18 Requests or demands for access.

Subpart B—Preservation and Protection

1275.20 Responsibility.
1275.22 Security.
1275.24 Archival processing.
1275.26 Access procedures.
1275.28 Extraordinary authority during emergencies.

Subpart C—Access to Materials by Former President Nixon, Federal Agencies, and for Use in Any Judicial Proceeding

1275.30 Access by former President Nixon.
1275.32 Access by Federal agencies.
1275.34 Access for use in judicial proceedings.

Subpart D—Access by the Public

1275.40 Scope of subpart.
1275.42 Processing period; notice of proposed opening.
1275.44 Rights and privileges; right to a fair trial.
1275.46 Segregation and review; Senior Archival Panel; Presidential Materials Review Board.
1275.48 Transfer of materials.
1275.50 Restriction of materials related to abuses of governmental power.
1275.52 Restriction of materials of general historical significance unrelated to abuses of governmental power.
1275.54 Periodic review of restrictions.
1275.56 Appeal of restrictions.
1275.58 Deletion of restricted portions.
1275.60 Requests for declassification.
1275.62 Reference room locations, hours, and rules.
1275.64 Reproduction of tape recordings of Presidential conversations.
1275.66 Reproduction and authentication of other materials.
1275.68 Amendment of regulations.
1275.70 Freedom of information requests.
APPENDIX A TO PART 1275—SETTLEMENT AGREEMENT

AUTHORITY: Sec. 102(a) of the National Archives and Records Administration Act of 1984, Pub. L. 98–497; 44 U.S.C. 2104; and secs. 103 and 104 of the Presidential Recordings and Materials Preservation Act 88 Stat. 1695; 44 U.S.C. 2111 note.

SOURCE: 51 FR 7230, Feb. 28, 1986, unless otherwise noted.

§1275.1 Scope of part.

This part sets forth policies and procedures concerning the preservation and protection of and access to the tape recordings, papers, documents, memorandums, transcripts, and other objects and materials which constitute the Presidential historical materials of Richard M. Nixon, covering the period beginning January 20, 1969, and ending August 9, 1974.

Subpart A—General Provisions

§1275.10 Purpose.

This part 1275 implements the provisions of title I of the Presidential Recordings and Materials Preservation Act (Pub. L. 93–526; 88 Stat. 1695). It prescribes policies and procedures by which the National Archives and Records Administration will preserve, protect, and provide access to the Presidential historical materials of the Nixon Administration.

§1275.12 Application.

This part 1275 applies to all of the Presidential historical materials of the Nixon Administration in the custody of the Archivist of the United States pursuant to the provisions of title I of the Presidential Recordings and Materials Preservation Act (Pub. L. 93–526; 88 Stat. 1695).

§ 1275.14 Legal custody.

The Archivist of the United States has or will obtain exclusive legal custody and control of all Presidential historical materials of the Nixon Administration held pursuant to the provisions of title I of the Presidential Recordings and Materials Preservation Act (Pub. L. 93–526; 88 Stat. 1695).

§ 1275.16 Definitions.

For the purposes of this part 1275, the following terms have the meaning ascribed to them in this § 1275.16.

(a) *Presidential historical materials.* The term *Presidential historical materials* (also referred to as *historical materials* and *materials*) shall mean all papers, correspondence, documents, pamphlets, books, photographs, films, motion pictures, sound and video recordings, machine-readable media, plats, maps, models, pictures, works of art, and other objects or materials made or received by former President Richard M. Nixon or by members of his staff in connection with his constitutional or statutory powers or duties as President and retained or appropriate for retention as evidence of or information about these powers or duties. Included in this definition are materials relating to the political activities of former President Nixon or members of his staff, but only when those activities directly relate to or have a direct effect upon the carrying out of constitutional or statutory powers or duties. Excluded from this definition are documentary materials of any type that are determined to be the official records of an agency of the Government; private or personal materials; stocks of publications, processed documents, and stationery; and extra copies of documents produced only for convenience or reference when they are clearly so identified.

(b) *Private or personal materials.* The term *private or personal materials* shall mean those papers and other documentary or commemorative materials in any physical form relating solely to a person's family or other non-governmental activities, including private political associations, and having no connection with his constitutional or statutory powers or duties as President or as a member of the President's staff.

(c) *Abuses of governmental power popularly identifed under the generic term ''Watergate.''* The term *abuses of governmental power popularly identified under the generic term ''Watergate''* (also referred to as *abuses of governmental power*), shall mean those alleged acts, whether or not corroborated by judicial, administrative or legislative proceedings, which allegedly were conducted, directed or approved by Richard M. Nixon, his staff or persons associated with him in his constitutional or statutory functions as President, or as political activities directly relating to or having a direct effect upon those functions, and which—

(1) Were within the purview of the charters of the Senate Select Committee on Presidential Campaign Activities or the Watergate Special Prosecution Force; or

(2) Are circumscribed in the Articles of Impeachment adopted by the House Committee on the Judiciary and reported to the House of Representatives for consideration in House Report No. 93–1305.

(d) *General historical significance.* The term *general historical significance* shall mean having administrative, legal, research or other historical value as evidence of or information about the constitutional or statutory powers or duties of the President, which an archivist has determined is of a quality sufficient to warrant the retention by the United States of materials so designated.

(e) *Archivist.* The term *Archivist* shall mean the Archivist of the United States or his designated agent. The term *archivist* shall mean an employee of the National Archives and Records Administration who, by education or experience, is specially trained in archival science.

(f) *Agency.* The term *agency* shall mean an executive department, military department, independent regulatory or nonregulatory agency, Government corporation, Government-controlled corporation, or other establishment in the executive branch of the Government including the Executive Office of the President. For purposes of § 1275.32 only, the term *agency* shall also include the White House Office.

(g) *Archival processing.* The term *archival processing* may include the following general acts performed by archivists with respect to the Presidential historical materials: Shelving boxes of documents in chronological, alphabetical, numerical or other sequence; surveying and developing a location register and cross-index of the boxes; arranging materials; refoldering and reboxing the documents and affixing labels; producing finding aids such as folder title lists, scope and content notes, biographical data, and series descriptions; rewinding, duplicating and preserving the original tape recordings; enhancing the tape recordings on which the conversations are wholly or partially unintelligible so that extraneous noises may be filtered out; producing general subject matter logs of the tape recordings; reproducing and transcribing tape recordings; reviewing the materials to identify items that appear subject to restriction; identifying items in poor physical condition and assuring their preservation; identifying materials requiring further processing; and preparation for public access of all materials which are not subject to restriction.

(h) *Staff.* The term *staff* shall mean those persons whose salaries were paid fully or partially from appropriations to the White House Office or Domestic Council, or who were detailed on a nonreimbursable basis to the White House Office or Domestic Council from any other Federal activity; or those pesons who otherwise were designated as assistants to the President, in connection with their service in that capacity; or any persons whose files were sent to the White House Central Files Unit or Special Files Unit, for purposes of those files.

(i) *National security classified information.* The term *national security classified information* shall mean any matter which is security classified under existing law, and has been or should be designated as such.

[51 FR 7230, Feb. 28, 1986, as amended at 61 FR 17844, Apr. 23, 1996]

§ 1275.18 Requests or demands for access.

Each agency which receives a request or legal demand for access to Presidential historical materials of the Nixon Administration shall immediately forward the request or demand to the Archivist of the United States, National Archives and Records Administration (NARA), Washington, DC 20408.

Subpart B—Preservation and Protection

§ 1275.20 Responsibility.

The Archivist is responsible for the preservation and protection of the Nixon Presidential historical materials.

[61 FR 17845, Apr. 23, 1996]

§ 1275.22 Security.

The Archivist is responsible for providing adequate security for the Presidential historical materials.

§ 1275.24 Archival processing.

When authorized by the Archivist and until the commencement of archival processing in accordance with subpart D of this part, archivists may process the Presidential historical materials to the extent necessary for protecting and preserving the materials, and for providing authorized access to the materials pursuant to subpart C of this part.

§ 1275.26 Access procedures.

(a) The Archivist will receive and/or prepare appropriate documentation of each access authorized under this part 1275.

(b) Entry to the records storage areas will be provided by the Archivist only to archival, maintenance, security, or other necessary personnel or to Mr. Nixon or his agent. Two persons, at least one of whom represents the Archivist, will be present at all times that records storage areas are occupied.

(c) The Archivist will determine that each individual having access to the Presidental historical materials has a security clearance equivalent to the highest degree of national security classification that may be applicable to any of the material examined.

(d) The Archivist will provide former President Nixon or his designated attorney or agent (hereinafter Mr. Nixon), prior notice of, and allow him to be present during, each search necessary to comply with an authorized access under § 1275.32 or § 1275.34.

(e) Only NARA archivists shall conduct searches necessary to comply with authorized accesses under §§ 1275.32 and 1275.34.

(f) Prior to releasing Presidential historical materials in accordance with an access authorized under § 1275.32 or § 1275.34, the Archivist will give Mr. Nixon notice of the nature and identity of, and at his request allow him access to, those Presidential historical materials which the archivists have determined are covered by the subpoena, or other lawful process, or request. The notice will also inform Mr. Nixon that he may file a claim with the Archivist objecting to the release of all or portions of the described materials within 5 workdays of his receiving the notice described herein. The claim should detail the alleged rights and privileges of Mr. Nixon which would be violated by the release of the materials. The Archivist will refrain from releasing any of the materials to the requester during this period, and while any claim of right or privilege is pending before him, will refrain from releasing the materials subject to the claim.

(g) The Archivist will notify Mr. Nixon in writing of the administrative determination on any claims filed in accordance with paragraph (f) of this section. In the event the determination is wholly or partially adverse to the claim, the Archivist will refrain from releasing the materials to the requester for an additional 5 workdays from Mr. Nixon's receipt of the determination.

(h) Whenever possible, a copy, which shall be certified upon request, instead of the original documentary Presidential historical materials shall be provided to comply with a subpoena or other lawful process or request. Whenever the original documentary material is removed, a certified copy of the material shall be inserted in the proper file until the return of the original.

§ 1275.28 Extraordinary authority during emergencies.

In the event of an emergency that threatens the physical preservation of the Presidential historical materials or their environs, the Archivist will take such steps as may be necessary, including removal of the materials to temporary locations outside the metropolitan area of the District of Columbia, to preserve and protect the materials.

Subpart C—Access to Materials by Former President Nixon, Federal Agencies, and For Use in Any Judicial Proceeding

§ 1275.30 Access by former President Nixon.

In accordance with the provisions of subpart B of this part, former President Richard M. Nixon or his designated agent shall at all times have access to Presidential historical materials in the custody and control of the Archivist.

§ 1275.32 Access by Federal agencies.

In accordance with the provisions of subpart B of this part, any Federal agency or department in the executive branch shall have access for lawful Government use to the Presidential historical materials in the custody and control of the Archivist to the extent necessary for ongoing Government business. The Archivist will only consider written requests from heads of agencies or departments, deputy heads of agencies or departments, or heads of major organizational components or functions within agencies or departments.

§ 1275.34 Access for use in judicial proceedings.

In accordance with the provisions of subpart B of this part, and subject to any rights, defenses, or privileges which the Federal Government or any person may invoke, the Presidential historical materials in the custody and control of the Archivist will be made available for use in any judicial proceeding and are subject to subpoena or other lawful process.

Subpart D—Access by the Public

§1275.40 Scope of subpart.

This subpart sets forth policies and procedures concerning public access to the Presidential historical materials of Richard M. Nixon.

§1275.42 Processing period; notice of proposed opening.

(a)(1) The archivists will conduct archival processing of those materials other than tape recordings to prepare them for public access. In processing the materials, the archivists will give priority to segregating private or personal materials and transferring them to their proprietary or commemorative owner in accordance with §1275.48. In conducting such archival processing, the archivists will restrict portions of the materials pursuant to §§1275.50 and 1275.52. All materials other than tape recordings to which reference is made in §1275.64 will be prepared for public access and released subject to restrictions or outstanding claims or petitions seeking such restrictions. The Archivist will open for public access each integral file segment of materials upon completion of archival processing of that segment.

(2) The archivists will conduct archival processing of the tape recordings to prepare them for public access in accordance with the provisions set forth in the Settlement Agreement (see Appendix A to this part). In conducting the archival processing of the tape recordings, the archivists will restrict segments of the tape recordings pursuant to §§1275.50 and 1275.52. The tape segments which consist of abuses of governmental power information, as defined in §1275.16(c), will be given priority processing by the archivists and will be prepared for public access and released following review and resolution of objections from the Nixon estate and other interested parties as set forth in the Settlement Agreement (see Appendix A to this Part). After the tape segments which consist of abuses of governmental power information have been released, the archivists will conduct archival processing of those tape recordings which were taped in the Cabinet Room, as set forth in the Settlement Agreement, Appendix A to this Part. Following release of the Cabinet Room tape recordings, the remaining tape recordings will be prepared for public access and released in five segments in accordance with the schedule set forth in the Settlement Agreement. In addition, NARA will identify and return any additional private or personal segments to the Nixon estate, at approximately the time that NARA proposes each segment for public release.

(b) At least 30 calendar days prior to the opening to public access of any integral file segment of the materials, the Archivist will publish notice in the FEDERAL REGISTER of the proposed opening. The notice will reasonably identify the material to be opened and will include a reference to the right of any interested person to file a claim or petition in accordance with §1275.44. Copies of the notice will be sent to the incumbent President of the United States or his designated agent and by first-class mail to the last known address of: Mr. Nixon, or his designated agent or heirs; any former staff member reasonably identifiable as the individual responsible for creating or maintaining the file segment proposed to be opened; any individual named in the material which the Archivist may not restrict in accordance with §1275.50(b) because the material is essential to an understanding of any abuse of governmental power; and any persons named in the materials who are registered with the National Archives and Records Administration in accordance with paragraph (c) of this section.

(c) The Archivist will maintain a registry which shall contain the names and mailing addresses of persons who wish to receive personal notice of the proposed opening of integral file segments of the materials when those segments contain references about them. To be included in the registry, a person must submit his/her name and mailing address to the National Archives and Records Administration (NLN), Washington, DC 20408. Both the envelope and letter should be prominently marked, ''Nixon Materials Registry.'' By submitting his/her name for inclusion in the registry, a person agrees to reimburse the United States for the cost of

first-class postage for each instance of personal notice received.

[51 FR 7230, Feb. 28, 1986, as amended at 61 FR 17845, Apr. 23, 1996]

§ 1275.44 Rights and privileges; right to a fair trial.

(a) Within 30 days following publication of the notice prescribed in § 1275.42(b), any person claiming a legal or constitutional right or privilege which would prevent or limit public access to any of the materials shall notify the Archivist in writing of the claimed right or privilege and the specific materials to which it relates. Unless the claim states that particular materials are private or personal (see paragraph (d) of this section), the Archivist will notify the claimant by certified mail, return receipt requested, of his decision regarding public access to the pertinent materials. If that decision is adverse to the claimant, the Archivist will refrain from providing public access to the pertinent materials for at least 30 calendar days from receipt by the claimant of such notice.

(b) Within 30 days following publication of the notice prescribed in § 1275.42(b), officers of any Federal, State, or local court and other persons who believe that public access to any of the materials may jeopardize an individual's right to a fair and impartial trial should petition the Archivist setting forth the relevant circumstances that warrant withholding specified materials. The Archivist will notify the petitioner by certified mail, return receipt requested, of his decision regarding public access to the pertinent materials. If that decision is adverse to the petitioner, the Archivist will refrain from providing public access to the pertinent materials for at least 30 calendar days from receipt by the petitioner of such notice.

(c) In reaching decisions required by paragraphs (a) and (b) of this section, the Archivist may consult with other appropriate Federal agencies. If these consultations require the transfer of copies of the materials to Federal officials in agencies other than the National Archives and Records Administration, the Archivist will transfer these copies in accordance with the procedures prescribed in §§ 1275.26 and 1275.32.

(d) Within 30 days following publication of notice prescribed in § 1275.42(b), any person claiming that materials proposed for public access are in fact private or personal, as defined in § 1275.16(b), and that he or she is the proprietary or commemorative owner of those materials shall notify the Archivist in writing. The claim shall describe the specific materials to which it refers, and the claimant's basis for concluding that these materials are private or personal. Upon receipt of such a claim, the Archivist will transmit it to the Presidential Materials Review Board for its consideration and determination in accordance with § 1275.46(i). The Archivist will refrain from providing public access to the pertinent materials or from returning them to the claimant for at least 30 calendar days from receipt by the claimant or any intervening parties of the Board's determination.

(e)(1) In place of the right to make all other objections with respect to the tape segments that NARA has designated as abuses of governmental power materials, the Nixon estate may object to their release only on the ground that such designation by NARA is clearly inconsistent with the term ''abuses of governmental power'' as used in § 104(a)(1) of the Presidential Recordings and Materials Preservation Act (PRMPA) and defined in § 1275.16(c), as qualified by § 1275.50(b). Any such objection may not be based on isolated instances of alleged failure by NARA to apply the appropriate review standard, but only on a pattern of misapplication of the requirements of the PRMPA and its implementing regulations. Further, any such objection must be accompanied by specific examples of alleged review errors and contain sufficient information to enable the review panel of three Presidential Library archivists appointed by the Archivist, as described in the Settlement Agreement, Appendix A to this Part, to locate those examples readily.

(2) If an objection is made by the Nixon estate to the abuses of governmental power tape segments, the matter shall be immediately referred to a

panel of three Presidential Library archivists appointed by the Archivist as set forth in the Settlement Agreement, Appendix A to this Part. The decision of the panel shall be either that the Nixon estate's objection is sustained or that it is rejected. The decision shall include a brief statement of the panel's reasons, but it need not include an item-by-item determination. In deciding whether the designation by NARA of the material proposed to be released is clearly inconsistent with the definition of ''abuses of governmental power'', the panel shall consider whether the release would seriously injure legitimate interests of identifiable individuals, whether the errors suggest a pattern of misinterpretation, and any other factor that bears on the issue of whether NARA's designation of material as relating to ''abuses of governmental power'' was reasonable, considered as a whole. The panel's decision shall be final and binding on all parties to the *Kutler* litigation, and no party may exercise any right to appeal to any person, board, or court that might otherwise be available.

(3) The Nixon estate may, at any time, elect to use the procedures outlined in paragraphs (e)(1) and (e)(2) of this section for the tape recordings other than the abuses of governmental power segments, except that the standard under which objections shall be made by the Nixon estate, and under which the review panel shall decide their merits, is whether the release taken as a whole is plainly inconsistent with the requirements of the Presidential Recordings and Materials Preservation Act of 1974 and these regulations. If the Nixon estate elects to use the procedures in paragraph 1 of the Settlement Agreement (Appendix A to this Part) in place of the provisions in paragraphs 4 (b) and (d) and 5(c) of the Settlement Agreement for a tape segment, the estate cannot subsequently revert back to the formal objection process set forth in this section for that tape segment.

[51 FR 7230, Feb. 28, 1986; 51 FR 8671, Mar. 13, 1986, as amended at 61 FR 17845, Apr. 23, 1996]

§1275.46 Segregation and review; Senior Archival Panel; Presidential Materials Review Board.

(a) During the processing period described in §1275.42(a), the Archivist will assign archivists to segregate private or personal materials, as defined in §1275.16(b). The archivists shall have sole responsibility for the initial review and determination of private or personal materials. At all times when the archivists or other authorized officials have access to the materials in accordance with these regulations, they shall take all reasonable steps to minimize the degree of intrusion into private or personal materials. Except as provided in these regulations, the archivists or other authorized officials shall not disclose to any person private or personal or otherwise restricted information learned as a result of their activities under these regulations.

(b) During the processing period described in §1275.42(a), the Archivist will assign archivists to segregate materials neither relating to abuses of governmental power, as defined in §1275.16(c), nor otherwise having general historical significance, as defined in §1275.16(d). The archivists shall have sole responsibility for the initial review and determination of those materials which are not related to abuses of governmental power and do not otherwise have general historical significance.

(c) During the processing period described in §1275.42(a), the Archivist will assign archivists to segregate materials subject to restriction, as prescribed in §§1275.50 and 1275.52. The archivists shall have sole responsibility for the initial review and determination of materials that should be restricted. The archivists shall insert a notification of withdrawal at the front of the file folder or container affected by the removal of restricted material. The notification shall include a brief description of the restricted material and the basis for the restriction as prescribed in §§1275.50 and 1275.52.

(d) If the archivists are unable to make a determination required in paragraphs (a), (b), or (c) of this section, or if the archivists conclude that

the required determination raises significant issues involving interpretation of these regulations or will have far-reaching precedential value, the archivists shall submit the pertinent materials, or representative examples of them, to a panel of senior archivists selected by the Archivist. The Panel shall then have the sole responsibility for the initial determination required in paragraphs (a), (b), or (c) of this section.

(e) If the Senior Archival Panel is unable to make a determination required in paragraph (d) of this section, or if the panel concludes that the required determination raises significant issues involving interpretation of these regulations or will have far-reaching precedential value, the Panel shall certify the matter and submit the pertinent materials, or representative examples of them, to the Presidential Materials Review Board.

(f) The Presidential Materials Review Board (Board) shall consist of the Archivist, who shall serve as Chairman, and the following additional members:

(1) The Assistant Archivist for the Office of the National Archives;

(2) The Assistant Archivist for the Office of the Presidential Libraries;

(3) The Director of the Legal Counsel Staff of the National Archives and Records Administration; and

(4) The Historian of a Federal agency who shall be selected by the Archivist in his capacity as Chairman.

The Board shall meet at the call of the Chairman. Three members of the Board shall constitute a quorum for the conduct of the Board's business, although each member of the Board may participate in all of the Board's decisions. Members of the Board may be represented by their delegates on those occasions when they are unable to attend the meetings of the Board. The Board may consult with officials of interested Federal agencies in formulating its decisions. To the extent these consultations require the transfer of copies of materials to Federal officials outside the National Archives and Records Administration, the Board shall comply with the requirements of §§ 1275.26 and 1275.32.

(g) When the matter certified to the Board by the Senior Archival Panel involves a determination required in paragraphs (a) or (b) of this section, the Board shall prepare a final written decision, together with dissenting and concurring opinions, of the proper categorization and disposition of the pertinent materials. The Board's decision will be the final administrative determination.

(h) When the matter certified to the Board by the Senior Archival Panel involves a determination required in paragraph (c) of this section, the Board shall recommend an initial determination to the Senior Archival Panel, which shall retain the sole responsibility for the initial determination.

(i) When the Board considers a matter referred to it by the Archivist as provided in § 1275.44(d), it shall follow these procedures:

(1) The Board shall notify the claimant of its consideration of the claim, and invite the claimant to supplement at his discretion the basis for the claim.

(2) The Board will publish notice in the FEDERAL REGISTER, advising the public of its consideration of the claim, and describing the materials in question as fully as reasonably possible without disclosing arguably private or personal information. The notice will further advise that any member of the public may petition the Board within 15 calendar days of the publication of notice, setting forth the intervenor's views concerning the public or private nature of the materials.

(3) The Board shall take into account the positions maintained by the claimant and any intervenors in reaching its decision. The Board shall issue its decision, including dissenting and concurring opinions, no sooner than 20 days nor later than 60 days from the publication of notice in the FEDERAL REGISTER provided in paragraph (h)(2), of this section. The Board's decision shall be the final administrative determination. The Archivist will notify the claimant and any intervenors of the Board's decision by certified mail, return receipt requested, and shall refrain from acting upon that decision for 30 calendar days as provided in § 1275.44(d).

[51 FR 7230, Feb. 28, 1986, as amended at 61 FR 17845, Apr. 23, 1996]

§ 1275.48 Transfer of materials.

(a) The Archivist will transfer sole custody and use of those materials determined to be private or personal, or to be neither related to abuses of governmental power nor otherwise of general historical significance, to former President Nixon's estate, or, when appropriate and after notifying the Nixon estate, to the former staff member having primary proprietary or commemorative interest in the materials; however, no physical part of any original tape recording or a master preservation copy to which reference is made in § 1275.64 shall be transferred to the heirs of former President. NARA will maintain the original tape recordings and a master preservation copy, including the private and personal segments, in a manner consistent with the PRMPA and these regulations and will restrict access to all private or personal material on the originals and the master preservation copy.

(b) Materials determined to be neither related to abuses of governmental power nor otherwise of general historical significance, and transferred pursuant to paragraph (a) of this section, shall upon such transfer no longer be deemed Presidential historical materials as defined in § 1275.16(a).

[51 FR 7230, Feb. 28, 1986, as amended at 61 FR 17845, Apr. 23, 1996]

§ 1275.50 Restriction of materials related to abuses of governmental power.

(a) The Archivist will restrict access to materials determined during the processing period to relate to abuses of governmental power, as defined in § 1275.16(c), when:

(1) The Archivist, in accordance with § 1275.44, is in the process of reviewing or has determined the validity of a claim by any person of a legal or constitutional right or privilege; or

(2) The Archivist, in accordance with § 1275.44, is in the process of reviewing or has determined the validity of a petition by any person of the need to protect an individual's right to a fair and impartial trial; or

(3) The release of the materials would violate a Federal statute; or

(4) The materials are authorized under criteria established by Executive order to be kept secret in the interest of national defense or foreign policy, provided that any question as to whether materials are in fact properly classified or are properly subject to classification shall be resolved in accordance with the applicable Executive order or as otherwise provided by law. However, the Archivist may waive this restriction when:

(i)(A) The requester is engaged in a historical research project; or

(B) The requester is a former Federal official who had been appointed by the President to a policymaking position and who seeks access only to those classified materials which he originated, reviewed, signed or received while in public office; and

(ii) The requester has a security clearance equivalent to the highest degree of national security classification that may be applicable to any of the materials to be examined; and

(iii) The Archivist has determined that the heads of agencies having subject matter interest in the material do not object to the granting of access to the materials; and

(iv) The requester has signed a statement, which declares that the requester will not publish, disclose, or otherwise compromise the classified material to be examined and that the requester has been made aware of Federal criminal statutes which prohibit the compromise or disclosure of this information.

(b) The Archivist will restrict access to any portion of materials determined to relate to abuses of governmental power when the release of those portions would constitute a clearly unwarranted invasion of personal privacy or constitute libel of a living person: *Provided,* That if material related to an abuse of governmental power refers to, involves or incorporates such personal information, the Archivist will make available such personal information, or portions thereof, if such personal information, or portions thereof, is essential to an understanding of the abuses of governmental power.

§ 1275.52 Restriction of materials of general historical significance unrelated to abuses of governmental power.

(a) The Archivist will restrict access to materials determined during the processing period to be of general historical significance, but not related to abuses of governmental power, under one or more of the circumstances specified in § 1275.50(a).

(b) The Archivist will restrict access to materials of general historical significance, but not related to abuses of governmental power, when the release of these materials would:

(1) Disclose trade secrets and commercial or financial information obtained from a person and privileged or confidential; or

(2) Constitute a clearly unwarranted invasion of personal privacy or constitute libel of a living person; or

(3) Disclose investigatory materials compiled for law enforcement purposes, but only when the disclosure of such records would:

(i) Interfere with enforcement proceedings;

(ii) Deprive a person of a right to a fair trial or an impartial adjudication;

(iii) Constitute an unwarranted invasion of personal privacy;

(iv) Disclose the identity of a confidential source, and in the case of a record compiled by a criminal law enforcement authority in the course of a criminal investigation or by an agency conducting a lawful national security intelligence investigation, confidential information furnished only by the confidential source;

(v) Disclose investigative techniques and procedures; or

(vi) Endanger the life or physical safety of law enforcement personnel.

§ 1275.54 Periodic review of restrictions.

The Archivist periodically will assign archivists to review materials placed under restriction by § 1275.50 or § 1275.52 and to make available for public access those materials which, with the passage of time or other circumstances, no longer require restriction. If the archivists are unable to determine whether certain materials should remain restricted, the archivists shall submit the pertinent materials, or representative examples of them, to the Senior Archival Panel described in § 1275.44(d), which shall then have the responsibility for determining if the materials should remain restricted. The Senior Archival Panel may seek the recommendations of the Presidential Materials Review Board, in the manner prescribed in paragraph (e) and (h) of § 1275.46, in making its determination. Before opening previously restricted materials, the Archivist will comply with the notice requirements of § 1275.42(b).

[51 FR 7230, Feb. 28, 1986; 51 FR 8671, Mar. 13, 1986]

§ 1275.56 Appeal of restrictions.

Upon petition of any researcher who claims in writing to the Archivist that the restriction of specified materials is inappropriate and should be removed, the archivists shall submit the pertinent materials, or representative examples of them, to the Presidential Materials Review Board described in § 1275.46(f). The Board shall review the restricted materials, and consult with interested Federal agencies as necessary. To the extent these consultations require the transfer of copies of materials to Federal officials outside the National Archives and Records Administration, the Board shall comply with the requirements of §§ 1275.26 and 1275.32. As necessary and practicable, the Board shall also seek the views of any person, including former President Nixon, whose rights or privileges might be adversely affected by a decision to open the materials. The Board shall prepare a final written decision, including dissenting and concurring opinions, as to the continued restriction of all or part of the pertinent materials. The Board's decision shall be the final administrative determination. The Archivist will notify the petitioner and other interested persons of the final administrative determination within 60 calendar days following receipt of such petition. If the Board's decision is to open previously restricted materials, the Archivist will comply with the notice requirements of § 1275.42(b).

[51 FR 7230, Feb. 28, 1986, as amended at 61 FR 17846, Apr. 23, 1996]

§1275.58 Deletion of restricted portions.

The Archivist will provide a requester any reasonably segregable portions of otherwise restricted materials after the deletion of the portions which are restricted under this §1275.50 or §1275.52.

§1275.60 Requests for declassification.

Challenges to the classification and requests for the declassification of national security classified materials shall be governed by the provisions of 36 CFR part 1254 of this chapter, as that may be amended from time to time.

§1275.62 Reference room locations, hours, and rules.

The Archivist shall, from time to time, separately prescribe the precise location or locations where the materials shall be available for public reference, and the hours of operation and rules governing the conduct of researchers using such facilities. This information may be obtained by writing to: Office of Presidential Libraries (NL), The National Archives, Washington, DC 20408.

§1275.64 Reproduction of tape recordings of Presidential conversations.

(a) To ensure the preservation of original tape recordings of conversations which were recorded or caused to be recorded by any officer or employee of the Federal Government and which:

(1) Involve former President Richard M. Nixon or other individuals who, at the time of the conversation, were employed by the Federal Government; and

(2) Were recorded in the White House or in the office of the President in the Executive Office Buildings located in Washington, DC; Camp David, MD; Key Biscayne, FL; or San Clemente, CA; and

(3) Were recorded during the period beginning January 20, 1969, and ending August 9, 1974, the Archivist will produce duplicate copies of such tape recordings in his custody for public and official reference use. The original tape recordings shall not be available for public access.

(b) Since the original tape recordings may contain information which is subject to restriction in accordance with §1275.50 or §1275.52, the archivists shall review the tapes and delete restricted portions from copies for public and official reference use.

(c) Researchers may listen to reference copies of the tape recordings described in paragraph (a) of this section in a National Archives building in the Washington, DC area and at other reference locations established by the Archivist in accordance with §1275.62.

(d) The reproduction for members of the public of the reference copies of the available tape recordings described in paragraph (a) of this section will be permitted as follows: Copies of tape recordings will be made available following the public release of the last of the tape segments contemplated in §1275.42(a). If the releases contemplated in §1275.42(a) are not completed by December 31, 1999, NARA will, beginning January 1, 2000, allow members of the public to obtain copies only of the abuses of governmental power tapes, together with any other tapes publicly released as of the effective date of the Settlement Agreement. If the releases contemplated in §1275.42(a) are not completed by December 31, 2002, NARA will, beginning January 1, 2003, allow members of the public to obtain copies of all tapes that have been made available to the public by that date and tapes that subsequently become available as they are released. Such copying will be controlled by NARA or its designated contractor. The fees for the reproduction of the tape recordings under this section shall be those prescribed in the schedule set forth in part 1258 of this chapter or pertinent successor regulation, as that schedule is amended from time to time.

(e) The Archivist shall produce and maintain a master preservation copy of the original tape recordings for preservation purposes.

[51 FR 7230, Feb. 28, 1986, as amended at 61 FR 17846, Apr. 23, 1996]

§1275.66 Reproduction and authentication of other materials.

(a) Copying of materials other than tape recordings described in §1275.64 may be done by NARA, by a contractor

designated by NARA, or by researchers using self-service copiers. Such self-service copying shall be done in accordance with the NARA policy on self-service copying set forth at 36 CFR 1254.71, to ensure that such copying will not harm the materials or disrupt reference activities.

(b) The Archivist may authenticate and attest copies of materials when necessary for the purpose of the research.

(c) The fees for reproduction and authentication of materials under this section shall be those prescribed in the schedule set forth in part 1258 of this chapter or pertinent successor regulation, as that schedule is amended from time to time.

[51 FR 7230, Feb. 28, 1986, as amended at 61 FR 17846, Apr. 23, 1996]

§ 1275.68 Amendment of regulations.

The Archivist may from time to time amend the regulations of this subpart D in accordance with the applicable law concerning such amendments.

§ 1275.70 Freedom of information requests.

(a) The Archivist will process Freedom of Information Act requests for access to only those materials within the Presidential historical materials which are identifiable by an archivist as records of an agency as defined in § 1275.16(f). The Archivist will process these requests in accordance with the Freedom of Information regulations set forth in § 1254.30 of this chapter or pertinent successor regulations.

(b) In order to allow NARA archivists to devote as much time and effort as possible to the processing of materials for general public access, the Archivist will not process those Freedom of Information requests where the requester can reasonably obtain the same materials through a request directed to an agency (as defined in § 1275.16(f)), unless the requester demonstrates that he or she has unsuccessfully sought access from that agency or its successor in law or function.

[51 FR 7230, Feb. 28, 1986, as amended at 61 FR 17846, Apr. 23, 1996]

APPENIDX A TO PART 1275—SETTLEMENT AGREEMENT

Settlement Agreement filed April 12, 1996, in *Stanley I. Kutler and Public Citizen* v. *John W. Carlin, Archivist of the United States, and William E. Griffin and John H. Taylor, Co-executors of Richard M. Nixon's Estate,* Civil Action No. 92–0662–NHJ (D.D.C.) (Johnson, J.)

Settlement Agreement

This Settlement Agreement (''Agreement'') is made by and entered into among plaintiffs Stanley I. Kutler and Public Citizen; defendant/cross-claim defendant John W. Carlin, in his official capacity as Archivist of the United States; and defendant-intervenors/cross-claimants John H. Taylor and William E. Griffin, co-executors of the estate of Richard M. Nixon (''the Nixon estate''), in the above-entitled action by and through the parties' undersigned attorneys.

It is hereby agreed, by and among the parties, appearing through their undersigned attorneys, that this action is partially settled on the following terms:

Terms of Agreement

1(a). As soon as practicable, the National Archives and Records Administration (''the Archives'') will publicly release the segments of tape recordings made during the Presidency of Richard M. Nixon (''tape recordings'' or ''tapes'') identified by the Archives as relating to ''abuses of governmental power,'' as defined by 36 C.F.R. Part 1275, along with the corresponding portions of the tape log and any other finding aid. The date of that release, which is expected to be on or about November 15, 1996, shall be determined in the following manner.

(b). No later than April 15, 1996, the Archives shall deliver to an agent of the Nixon estate a copy of the approximately 201 hours of abuses of governmental power tape segments that it proposes to release, together with the corresponding portions of the tape log and any other finding aid, for review by the Nixon estate to determine whether it intends to object to the release. The Archives agrees to provide a period of orientation to the designated Nixon estate agent with respect to the review of the abuses of governmental power tape segments and to be available to respond to questions thereafter.

(c). In place of the right to make all other objections with respect to the tape recordings that the Archives has designated as abuses of governmental power materials, the Nixon estate agrees that it may object to their release only on the ground that such designation by the Archives is clearly inconsistent with the term ''abuses of governmental power'' as used in section 104(a)(1) of the Presidential Recordings and Materials Preservation Act of 1974 (''the Act''), 44

U.S.C. §2111 note, and defined in 36 C.F.R. 1275.16(c), as qualified by 36 C.F.R. 1275.50(b). Any such objection shall be in writing and may not be based on isolated instances of alleged failure by the Archives to apply the appropriate review standard, but only on a pattern of misapplication of the requirements of the Act and its implementing regulations. Further, any such objection must be accompanied by specific examples of alleged review errors and contain sufficient information to enable the review panel described in subparagraph 1(e) below to locate those examples readily. Nothing in this paragraph shall preclude the Nixon estate and the Archives from having informal discussions regarding the appropriate treatment of any of the abuses of governmental power tape segments.

(d). The Nixon estate shall have until October 1, 1996, to submit any objection in accordance with subparagraph 1(c) above. If no such objection is filed, the Archives shall proceed to issue a notice of proposed release pursuant to 36 C.F.R. 1275.42 as soon as possible, but no later than October 15, 1996.

(e). If an objection is made, the matter shall be immediately referred to a panel of the following three Presidential Library archivists: David Alsobrook, Frances Seeber, and Claudia Anderson. If any of these three persons is unable to serve, the Archivist shall appoint a substitute who is acceptable to the other parties.

(f). The panel shall have such access to the tapes as it deems necessary to make its decision. The decision of the panel shall be either that the Nixon estate's objection is sustained or that it is rejected. The decision shall include a brief statement of the panel's reasons, but it need not include an item-by-item determination. In deciding whether the designation by the Archives of the material proposed to be released is clearly inconsistent with the definition of ''abuses of governmental power,'' the panel shall consider whether the release would seriously injure legitimate interests of identifiable individuals, whether the errors suggest a pattern of misinterpretation, and any other factor that bears on the issue of whether the Archives' designation of material as relating to abuses of governmental power was reasonable, considered as a whole. The decision of the panel shall be made within sixty (60) days of the date of the objection. However, if the panel determines that exceptional circumstances interfere with its ability to meet this deadline, the panel shall have up to an additional sixty (60) days to make its decision. The Archives shall notify the other parties of the need for an extension and briefly describe the reasons therefor. The panel's decision shall be final and binding on all parties, and no party may exercise any right to appeal to any person, board, or court that might otherwise be available. Nothing contained in this Agreement shall preclude the panel from advising the Archives of any particular processing errors that it believes may have been made, but the Archivist shall make the final determination as to whether to accept such advice.

(g). If the objection of the Nixon estate is sustained, the Archives shall re-review the tapes sufficiently to address the concerns raised by whatever aspect of the objection is sustained. At the conclusion of such re-review, the same process of review, first by the Nixon estate and then by the panel in the event of further objection, shall be repeated for those tape segments concerning the subject matter of the sustained objection prior to any release of tape recordings designated as relating to abuses of governmental power.

(h). The Nixon estate agrees to inform the Archives and plaintiffs whether it intends to file objections as soon as it has made its decision. If there is an objection by the Nixon estate and it is overruled, the FEDERAL REGISTER notice shall be published within ten (10) days of the date of the panel's decision.

(i). If, following the FEDERAL REGISTER notice, no objection by other individuals to a release is received within the time provided by law, the Archives shall release the tape recordings within ten (10) days after such time has expired. If objections are received, they shall be promptly considered by the Archives and shall be decided as soon thereafter as practical. Any materials as to which an objection to release has been timely filed shall not be released until such objection has been resolved pursuant to 36 C.F.R. 1275.44. All materials not objected to shall be released no later than thirty (30) days after the time for objections has expired, provided that the Archives may withhold any additional conversation to which no objection has been made, pending final resolution of an objection to another conversation, if (i) such additional conversation is in close proximity on the tapes to the objected-to conversation and it would be burdensome for the Archives to separate out the releasable and objected-to portions, or (ii) the subjects of the releasable and the objected-to conversations are closely related to one another and the Archives determines that it might be misleading or might unfairly prejudice a living individual to release only one conversation. Any release under this Agreement shall include the corresponding portions of the tape log and any other finding aid.

(j). The Archives shall send to plaintiff Kutler, to arrive no later than the day that the release of the tapes occurs, a copy of the portions of the tape log and any other finding aid that correspond to the tapes being released. The Archives shall also make suitable arrangements for plaintiff Kutler to listen to such tapes on the date of their release, and/or on such other subsequent business days as plaintiff Kutler shall designate.

2(a). Although the Agreement provides that the Archives will identify and return to the Nixon estate a copy of any private or personal materials identified on the tapes, the parties have been unable to reach agreement regarding the Archivist's retention and maintenance of the original tape recordings in their entirety, including those segments deemed to be private or personal, along with a master preservation copy. The government's position is that it is complying with the Act by retaining the original tapes and a master preservation copy, including those portions containing private or personal conversations. The Nixon estate's position, with which plaintiffs agree, is that the family has statutory, constitutional, and other rights that prevent the Archives from retaining private or personal materials, on both the original tapes and all copies.

(b). The parties have agreed to litigate the issue described in subparagraph 2(a) above, including the validity of 36 C.F.R. 1275.48(a) and 1275.64(e) as proposed for amendment. The parties further agree that the Court shall retain jurisdiction of that issue, as provided in paragraph 14 below, and that the right to litigate this issue includes the right to seek review in the United States Court of Appeals for the District of Columbia Circuit and the United States Supreme Court. If there is litigation between the Nixon estate and the Archivist over the issue described in subparagraph 2(a) above, the plaintiffs shall support the Nixon estate in any such litigation by filing a brief supporting the estate's position in District Court. The parties agree to make all reasonable efforts to expedite resolution of this issue.

(c). This Agreement and all discussions, negotiations and exchanges of information leading to it shall be entirely without prejudice to any positions the parties may take in the event of such litigation. Nothing in this Agreement, in any discussions leading to it, or in any information or materials exchanged by the parties as part of the mediation may be relied on or disclosed by any party to support or rebut the position of any party with respect to the treatment of private or personal materials on the original tapes. Nothing in this subparagraph prevents any party from expressing its understanding as to the meaning and effect of the legal position of another party.

3. The Archives will provide to the Nixon estate any additional private or personal materials at approximately the time that the Archives proposes each segment identified in paragraphs 4 and 5 below for public release. Any additional copies of that material (other than on a master preservation copy, the status of which will be determined in accordance with the resolution of the issue as described in subparagraph 2(a) above), will be destroyed by appropriate method, with appropriate means of verification.

4(a). The second group of tapes to be processed for release is the approximately 278 hours recorded in the Cabinet Room. The projected date for publishing a notice of proposed opening of tapes in that group is August 1, 1997. The Archives will make the Cabinet Room tapes proposed for release available to the Nixon estate in no fewer than four (4) segments. The process by which those tapes will be reviewed by the Nixon estate, and the objections handled by the Archives, is set forth in the following subparagraphs of this paragraph 4.

(b). The Nixon estate agrees to review each segment as it is received and promptly to call to the attention of the Archives any concerns that it may have. The Archives and the Nixon estate agree to attempt to work out their differences informally in order to minimize any objections to a proposed release. To facilitate informal consultation between the Nixon estate and the Archives concerning the tape review, the Archivist shall designate a panel member identified in subparagraph 1(e) above who will serve as a contact with the Nixon estate and assure access to information relating to Presidential libraries practices and procedures that may arise in the course of the tape review. The designated individual will be responsible for assuring that the Nixon estate has access to the appropriate person to answer its concerns. The Nixon estate may communicate with the designated individual orally or in writing. If the Archives agrees with the Nixon estate that any portion of a segment that has been sent to the Nixon estate as a proposed release should not be released, the Archives shall assure that there is appropriate documentation to reflect that change.

(c). The Nixon estate will have a period of at least six (6) months in which to review all of the Cabinet Room tapes, beginning on the date the Archives makes the first installment of such tapes available to the estate for review (but in no event will the six (6) months begin earlier than November 15, 1996). During the review of the Cabinet Room tapes, the Nixon estate will employ an agent or agents who will spend an average of at least thirty two (32) hours a week (total) in actual review of the tapes. The Nixon estate may request from the Archives an extension of the six-month review period, which the Archives shall grant if good cause is shown.

(d). If, during its review, the Nixon estate becomes aware that there are materials proposed for release that it believes should not be heard even by individuals on the registry list, it will promptly advise the Archives of any such materials so that they can be reviewed and/or segregated by the Archives before any other individual is permitted to listen to them. The Nixon estate will cooperate with the Archives so that the required FEDERAL REGISTER notice is published as soon as possible, but in no event shall such notice be

provided later than ten (10) days after the time the Nixon estate completes its review. Final objections from the Nixon estate to the release of portions of the tapes shall be filed in accordance with 36 C.F.R. Part 1275 no later than the date for filing objections by other persons. Thereafter, subject to paragraph 7 below, the provisions of subparagraphs 1(i) and 1(j) above will apply.

5(a). The remaining tapes, consisting of approximately 2338 hours, shall be processed for release in five (5) segments. Because the precise number of hours of tapes for each month cannot readily be determined, the parties have agreed to divide the releases into the segments set forth below. The Archives will begin processing (which includes, but is not limited to, tape review, preparing tapes for declassification review, tape editing and production of finding aids) each segment before processing of the preceding segment is concluded. Processing of the tapes in each segment is projected to take from about fifteen (15) to about twenty three (23) months. The approximate number of hours of tapes to be reviewed in each segment is set forth in parentheses in the following listing of the segments. The projected number of months between the completion of the Archives' processing of the immediately preceding segment and the completion of the Archives' processing of each listed segment is set forth in brackets.

1. February 1971–July 1971 (437 hours) [8 months]
2. August 1971–December 1971 (405 hours) [7 months]
3. January 1972–June 1972 (440 hours) [7 months]
4. July 1972–October 1972 (410 hours) [6 months]
5. November 1972–July 1973 (646 hours) [10 months]

(b). The time estimates in this Agreement are not enforceable as such, but the parties agree to have the Court retain jurisdiction to consider requests that it enter a binding order setting a schedule for the Archives to complete the processing of the tapes. No party may seek such an order unless that party first provides twenty (20) days' written notice to the other parties of that party's intention to seek such an order. Further, no party may seek such an order except on the ground that the Archives has unreasonably failed to meet the estimates contained herein by a substantial amount. The type of proof that will demonstrate reasonableness on the part of the Archives in this regard may include, but will not necessarily be limited to, a showing that the Archives is reasonably allocating its resources among its various programs and activities in the event that it experiences a shortage of resources, including any occasioned by court order.

(c). Portions of each segment processed by the Archives shall be provided to the Nixon estate when the processing of each month of tape recorded material is completed, unless there are a very few hours for two (2) or more months, which may then be combined into a single unit. During its review of the chronological tape segments, the Nixon estate will employ an agent or agents who will spend an average of at least thirty two (32) hours a week (total) in actual review of the tapes, forty eight (48) weeks of the year. As its review of the tapes proceeds, the Nixon estate shall provide a written report of its progress to the Archives and the plaintiffs on a bimonthly basis. The report shall include the number of hours worked in each week, the number of hours of tapes reviewed in each week, and the Nixon estate's projected completion date for review of the segment currently under review. The provisions of subparagraphs 4(b) and 4(d) above shall apply to the review, objections, and releases with respect to the chronological tape segments, subject to paragraph 7 below.

(d). If one of the other parties to this Agreement determines that the Nixon estate's review is not being conducted diligently or in good faith, or that the estate's estimated completion date(s) of one or more segments is unreasonable, that party may petition the Archivist to establish an earlier date(s) for the completion of the review of that segment and/or of future segments. Any such date(s) established by the Archivist shall provide the Nixon estate with a reasonable opportunity to protect and assert its interests without unduly delaying the release of the tapes, and shall be based upon consideration of the progress of the Archives' review and its scheduled completion date(s); the progress to date of the estate's review; and the time reasonably necessary to complete the estate's review and to formulate and present any objections. The Archives may also propose earlier dates for the completion of the review by the Nixon estate on the basis provided for in this subparagraph. If a proposal for an earlier date is made, the Nixon estate will have a reasonable opportunity to respond.

6. Once the Archives has completed processing the approximately 2338 hours of tapes discussed in paragraph 5 above, and has made corresponding releases, the Archives shall identify any additional copies of partial tape segments in its possession. If the Archives determines that some or all of such additional partial tape segments are duplicative of any tape recordings that it has already processed, the Archives may dispose of the duplicative tape segments, following notification to the parties, subject to paragraph 3 above. To the extent that such partial tape segments are not duplicative of the tape recordings already processed, the Archives shall promptly process such non-duplicative

portions and shall treat any portions determined to be private or personal consistently with the resolution of the issue to be litigated as described in paragraph 2 above.

7(a). After completion of the procedures described in paragraph 4 above, the Cabinet Room tapes that are found to be releasable under paragraph 4 above may be released if either there has been a final decision by the district court on the issue to be litigated as described in subparagraph 2(a) above, or the release is scheduled after April 1, 1998, whichever of these two events happens sooner.

(b). After completion of the procedures described in paragraph 5 above, the tapes described in paragraph 5(a) above that are found to be releasable may be released if either there has been a final judgment by the district court, which is not subject to further review by appeal or certiorari, with regard to the issue to be litigated as described in subparagraph 2(a) above, or there has been a final decision by the United States Court of Appeals for the District of Columbia Circuit on this issue, or the release is scheduled to take place after November 1, 1999, whichever of these three events happens sooner.

(c). As used in subparagraphs 7(a) and (b) above, the term ''final decision'' means a decision not subject to reconsideration under Rule 59 of the Federal Rules of Civil Procedure, or Rules 35 or 40 of the Federal Rules of Appellate Procedure, respectively.

8. The Nixon estate may, at any time, elect to use the procedures in paragraph 1 above with respect to any tape segment in place of the provisions of paragraphs 4(b) and (d) and 5(c) above, with the following substitution: The standard under which objections shall be made, and under which the panel shall decide their merits, is whether the release taken as a whole is plainly inconsistent with the requirements of the Act and its implementing regulations. Provided, however, that once the Nixon estate elects to use the procedures in paragraph 1 above in place of the provisions in paragraphs 4(b) and (d) and 5(c) above, it cannot subsequently revert back to the formal objection process set forth in 36 C.F.R. Part 1275 for that tape segment.

9. Within thirty (30) days of the Court's entry of an order as described in paragraph 14 below, the Archivist shall designate a particular person who shall be responsible for responding to reasonable inquiries from the plaintiffs on the status of the releases and objections. Such designation may be changed at any time at the Archivist's discretion by a notice to plaintiffs through their counsel.

10. If the Archives appoints a Senior Archival Panel as defined in 36 C.F.R. 1275.46(d) and (e), no party to the Agreement may object to the appointment of such a panel on the ground that the suggestion to appoint such a panel was originated by an individual other than the processing archivists assigned to the Archives' Nixon Presidential Materials Staff.

11. The Archives will allow members of the public to obtain copies of publicly accessible portions of the tapes after the releases described in paragraph 5 above, are completed; provided, however, that if the releases described in paragraph 5 above are not completed by December 31, 1999, the Archives will allow members of the public to obtain copies only of the abuses of governmental power tapes, together with any other tapes publicly released as of the date of the filing of this Agreement with the Court, beginning January 1, 2000. Further provided, that if the releases described in paragraph 5 above are not completed by December 31, 2002, the Archives will, beginning January 1, 2003, allow members of the public to obtain copies of all tapes that have been made available to the public by that date and tapes that subsequently become available, as they are released.

12(a). Promptly after the Court enters the Order provided for in paragraph 14 below, plaintiff Kutler will withdraw his request under the Freedom of Information Act, 5 U.S.C. 552, for any and all tape logs and other finding aids, which is pending in *Kutler* v. *Carlin, et al.*, Civ. A. No. 92–0661–NHJ (D.D.C.). In all other respects, plaintiff Kutler's request in that action shall be unaffected by this Agreement.

(b). Nothing in this Agreement shall affect the processing by the Archives of any dictabelts, which are a collection of recordings of former President Nixon and other White House staff members dictating memoranda, correspondence and speech drafts, that are included in the materials that are subject to the Act.

13. Pursuant to Rule 315 of this Court, the plaintiffs and the defendant shall attempt to resolve the plaintiffs' claim for attorneys' fees and expenses and shall advise the Court no later than forty-five (45) days after this Court has entered the Order provided for in paragraph 14 below on whether they have been able to resolve the issue of attorneys' fees and expenses. If no resolution has been reached, they will, at that time, recommend a schedule to the Court to resolve such claim.

14. The parties agree to the dissolution of the preliminary injunction entered on August 9, 1993, and dismissal with prejudice of this action, including all claims and cross-claims, except for the issue to be litigated as described in subparagraph 2(a) above, and any fees and expenses claimed pursuant to paragraph 13 above, by filing the attached Joint Motion to Vacate Preliminary Injunction and to Dismiss Claims, and the attached Consent Order. The parties agree that the Court shall retain jurisdiction to: (a) Consider the entry of an order in accordance with the terms of paragraph 5 above; (b) resolve the issue to be litigated as described in subparagraph 2(a) above; (c) determine any fees and expenses claimed pursuant to paragraph 13 above; and (d) for the purpose of enforcing the terms of this Agreement. The parties further agree that such jurisdiction, except with respect to the issue described in paragraph 2 above, will be retained only until the later of the implementation of paragraph 11 above or the completion of the releases called for in paragraph 5 above. Plaintiffs and the Nixon estate further agree that they will not challenge any regulations issued by the Archives which implement and are consistent with this Agreement.

15. The terms of this Agreement may not be altered except with the written consent of the parties. Nothing in this Agreement constitutes an admission of liability or wrongdoing on the part of any party.

Executed this 12th day of April, 1996.

For Plaintiffs Stanley I. Kutler and Public Citizen:

Alan B. Morrison,

(D.C. Bar No. 073114), Public Citizen Litigation Group, 1600 20th Street NW., Washington, DC 20009, (202) 588–1000.

For Defendant John W. Carlin:

Anne L. Weismann,

(D.C. Bar No. 298190)

Judry L. Subar,

(D.C. Bar No. 347518)

Alina S. Kofsky,

(D.C. Bar No. 419093), Department of Justice, Federal Programs Branch, Civil Division, 901 E Street NW., Room 1010, Washington, DC 20530, (202) 514–4523.

For Defendant-Intervenors John H. Taylor and William E. Griffin:

Herbert J. Miller,

(D.C. Bar No. 026120)

R. Stan Mortenson,

(D.C. Bar No. 114678)

Scott L. Nelson,

(D.C. Bar No. 413548)

Ellen Fels Berkman,

(D.C. Bar No. 433310)

Miller, Cassidy, Larroca & Lewin,

2555 M Street, NW., Washington, DC 20037, (202) 293–6400.

[61 FR 17846, Apr. 23, 1996]

SUBCHAPTER G—NARA FACILITIES

PART 1280—PUBLIC USE OF FACILITIES

Subpart A—General Provisions

Sec.
1280.1 Applicability.
1280.2 Admittance of children under the age of 16.
1280.3 Conformity with signs and directions.
1280.4 Vehicular and pedestrian traffic.
1280.5 Dogs and other animals.
1280.6 Inspection.
I280.7 Distribution of handbills and other materials.
1280.8 Prohibited activities.

Subpart B—National Archives Building

1280.10 Admittance of visitors to National Archives Exhibition Hall.
1280.12 Filming or photographing the exterior of the National Archives Building.
1280.14 Permission for filming the interior of the National Archives Building, the Washington National Records Center, and the Pickett Street Annex.
1280.16 Filming or photographing documents in exhibit areas for personal use.
1280.18 Artificial lighting in public areas.
1280.20 The National Archives Library.
1280.22 National Archives Theater and conference rooms.
1280.24 Application for outside use of National Archives Theater and conference rooms.
1280.26 Archivist's Reception Room.
1280.28 Application for outside use of the Archivist's Reception Room.

Subpart C—Facilities in Presidential Libraries

1280.40 Museum areas.
1280.42 Auditoriums and other public spaces.
1280.44 Supplemental rules.
1280.46 Book collections.
1280.48 Photographing documents.

Subpart D—Federal Records Centers and National Archives Field Branches

1280.60 Use of conference rooms.
1280.62 Restrictions on use.

AUTHORITY: 44 U.S.C. 2104(a).

Subpart A—General Provisions

SOURCE: 52 FR 23822, June 25, 1987, unless otherwise noted.

§ 1280.1 Applicability.

All persons using the facilities in the National Archives Building and the Presidential Libraries (referred to in this subpart as ''NARA property'') are subject to the provisions of subpart A of this part. Persons using other NARA facilities are subject to the GSA regulations, Conduct on Federal Property, at 41 CFR subpart 101–20.3.

§ 1280.2 Admittance of children under the age of 16.

Children under the age of 16 will not be admitted to NARA facilities unless accompanied by an adult. Children under the age of 16 must be supervised by the accompanying adult at all times while on NARA property. The director of a NARA facility may authorize a lower age limit for admission of unaccompanied children to meet local circumstances, e.g., students who have been given permission to conduct research without adult supervision.

[56 FR 2137, Jan. 22, 1991]

§ 1280.3 Conformity with signs and directions.

Persons in and on NARA property shall at all times comply with official NARA signs (e.g., restrictions on smoking or parking) and with the directions of the guards and NARA staff.

§ 1280.4 Vehicular and pedestrian traffic.

(a) The blocking of entrances, driveways, walks, loading platforms, or fire hydrants on NARA property is prohibited.

(b) Except in emergencies, members of the public may not park in spaces reserved for holders of NARA parking permits.

§ 1280.5 Dogs and other animals.

Dogs and other animals, except seeing eye dogs or other guide dogs, may not be brought upon NARA property

without permission of the appropriate NARA official.

§ 1280.6 Inspection.

Packages, briefcases, and other containers brought into, while on, or being removed from the NARA property are subject to inspection.

§ 1280.7 Distribution of handbills and other materials.

Distribution or posting of handbills, flyers, pamphlets or other materials on bulletin boards or elsewhere is prohibited on NARA property, except in those spaces designated by NARA as public forums. This prohibition also does not apply to displays or notices distributed as part of authorized Government activities or bulletin boards used by employees to post personal notices.

§ 1280.8 Prohibited activities.

(a) *Gambling.* Participating in games for money or other personal property or the operating of gambling devices, the conduct of a lottery or pool, or the selling or purchasing of numbers tickets, in or on NARA property is prohibited. This prohibition does not apply to the vending or exchange of chances by licensed blind operators of vending facilities for any lottery set forth in a State law and conducted by an agency of a State as authorized by section 2(a)(5) of the Randolph-Sheppard Act (20 U.S.C. 107, *et seq.*).

(b) *Illegal drugs.* The possession or use of illegal drugs on NARA property and/or entering on NARA property under the influence of alcohol or any illegal drug is prohibited.

(c) *Weapons and explosives.* No person entering or while on NARA property shall carry or possess firearms, other dangerous or deadly weapons, either openly or concealed, except for official purposes. No person entering or while on NARA property shall carry or possess explosives, or items intended to be used to fabricate an explosive or incendiary device.

(d) *Soliciting, vending, and debt collection.* Charitable or commercial or political soliciting, vending of all kinds, displaying or distributing commercial advertising, or collecting private debts on NARA property is prohibited. National or local drives for funds for welfare, health or other purposes which are authorized by the Office of Personnel Management and approved by NARA are exempt from this paragraph.

(e) *Disturbances.* Loitering, disorderly conduct, or other conduct on NARA property which creates a loud or unusual noise or a nuisance; which unreasonably obstructs the usual use of entrances, foyers, lobbies, corridors, offices, elevators, stairways, or parking areas; which otherwise impedes or disrupts the performance of official duties by Government employees; or which prevents the general public from obtaining NARA-provided services in a timely manner, is prohibited.

(f) *Other.* The improper disposal of rubbish on NARA property; the willful destruction of or damage to NARA property; the theft of property; the creation of any hazard on NARA property to persons or things; or the throwing of any kind of articles from or at a NARA building is prohibited.

Subpart B—National Archives Building

§ 1280.10 Admittance of visitors to National Archives Exhibition Hall.

Unless otherwise directed by the Archivist of the United States, visitors are admitted to the Exhibition Hall from 10 a.m. to 9 p.m. except during winter months (the day after Labor Day through March 31) when the Exhibition Hall is closed at 5:30 p.m. The building is closed on Christmas Day. Visitors are admitted only through the Constitution Avenue entrance. However, the guards are authorized to admit handicapped visitors to the Exhibition Hall through the Pennsylvania Avenue entrance and the Main Floor gates.

[45 FR 29577, May 5, 1980. Redesignated and amended at 50 FR 15723, 15728, Apr. 19, 1985]

§ 1280.12 Filming or photographing the exterior of the National Archives Building.

(a) *Definition. Property under the control of the Archivist* includes the Pennsylvania Avenue NW., entrance between 7th and 9th Streets including the area within the retaining walls on either side of the entrance, inclusive of the statues, and the steps leading up to

the entrance of the building; on the 7th Street, 9th Street, and Constitution Avenue NW., sides of the building, all property between the National Archives Building and the street, including the sidewalks and other grounds; the steps leading up to the Constitution Avenue NW., entrance; the Constitution Avenue entrance; and the portico area between the steps and the Constitution Avenue entrance. Use of the sidewalks and other grounds on the Pennsylvania Avenue side of the National Archives Building not under the control of the Archivist of the United States is controlled by the National Park Service and/or the Pennsylvania Avenue Development Corporation.

(b) *Applicability*. This section applies to all persons and groups who wish to film or photograph the exterior of the National Archives Building from property under the control of the Archivist of the United States, except for individuals who wish to film or photograph the exterior of the National Archives Building for their own personal use.

(c) *Pennsylvania Avenue entrance.* Persons and groups must obtain the permission of the National Archives Public Affairs Officer or his/her designee (NXI), either in writing or by telephone, before filming or photographing the Pennsylvania Avenue entrance of the National Archives Building. Filming and photographing will be permitted only for the purpose of providing background to stories about either NARA or a researcher who has made use of National Archives holdings. Press interviews will not be permitted unless NARA or other Government employees are being interviewed in connection with official business.

(d) *Constitution Avenue entrance.* Permission to film or photograph the Constitution Avenue entrance, the portico, or the steps leading to these areas will only be granted if the filming or photographing to be done relates to interviews done with NARA or other Government employees or to the coverage of NARA-sponsored programs, e.g., Constitution Day programs.

(e) *Conditions and restrictions.* The following conditions and restrictions apply to all persons and groups granted permission under this section:

(1) Permission to film or photograph will not be granted to persons or groups wishing to promote commercial enterprises or commodities, or to persons or groups involved with political, sectarian, or similar activities.

(2) Filming or photographing may not impede ingress or egress of visitors to the National Archives Building.

(3) Permission to film or photograph the exterior of the National Archives Building does not constitute approval or sponsorship by NARA of the persons or groups involved, of their activities or views, or of the uses to which the works depicting the National Archives Building are put.

(4) Permission to film or photograph does not release the perons or groups involved from liability for injuries to persons or property that result from their activities on property to which the Archivist controls access.

(5) Persons and groups granted permission to film or photograph under this section must conduct their activities at all times in accordance with the regulations contained in subpart A of this part (§§ 1280.1 through 1280.8).

[55 FR 29577, July 20, 1990]

§ 1280.14 Permission for filming the interior of the National Archives Building, the Washington National Records Center, and the Pickett Street Annex.

(a) *Applicability*. (1) This section applies to all persons and groups who wish to film or photograph the interior of the National Archives Building, the interior of the Washington National Records Center, and interior of the Pickett Street Annex, with the following exceptions:

(i) Individuals covered by § 1280.16 of this chapter; and

(ii) Individuals who have permission to use privately-owned microfilming equipment to film archival records and donated historical materials under the provisions of §§ 1254.90 through 1254.102 of this chapter.

(2) This section does not apply to the following areas within the National Archives Building, which are covered by §§ 1280.22 through 1280.28 of this chapter:

(i) Conference rooms;

(ii) The National Archives Theater; and

(iii) The Archivist's Reception Room.

(b) *Permission for filming or photographing.* Persons and groups must obtain the permission of the Public Affairs Officer or his/her designee before filming or photographing the interior of the National Archives Building, the Washington National Records Center, and/or the Pickett Street Annex. Permission must be requested in writing at least one week prior to the proposed activity. Filming and photographing will only be permitted for the purpose of providing background to stories about NARA or a researcher making use of National Archives holdings. Press interviews will not be permitted unless NARA or other Government employees are being interviewed in connection with official business. Filming or photographing will not be permitted in areas of the buildings not open to the general public or to researchers, or in records storage (stack) areas.

(c) *Conditions and restrictions.* The following conditions and restrictions apply to all persons and groups granted permission under this section:

(1) Permission to film or photograph will not be granted to persons or groups wishing to promote commercial enterprises or commodities, or to persons or groups involved with political, sectarian, or similar activities.

(2) Persons and groups must be accompanied at all times by a member of the Public Affairs Staff when in the National Archives Building, Washington National Records Center, or Pickett Street Annex for other than research purposes (see part 1254 of this chapter for regulations on research use of records and donated historical materials.)

(3) The filming and photographing of documents shall take place only in areas designated by the NARA Public Affairs Staff. NARA may limit or prohibit use of artificial light in connection with the filming or photographing of documents.

(4) Interviews with NARA staff and researchers shall take place only in areas designated by the NARA Public Affairs Staff.

(5) Approved film and photography sessions will normally be limited to two hours.

(6) Persons and groups are subject at all times to the regulations set forth at subpart A of this part.

(7) Permission to film or photograph under this section does not constitute approval or sponsorship by NARA of the persons or groups involved, of their activities or views, or of the uses to which the works depicting the facilities are put.

(8) Permission to film or photograph under this section does not release the persons or groups involved from liability for injuries to persons or property that result from their activities on NARA property.

[55 FR 29577, July 20, 1990]

§1280.16 Filming or photographing documents in exhibit areas for personal use.

Filming or photographing documents or exhibits in the Exhibition Hall, the Pennsylvania Avenue lobby, or any other exhibit areas in the National Archives Building without supplemental artificial light sources, or tripods, or similar equipment is permitted for personal use at any time during regular hours. However, such activities may not take place on the steps or ramp leading to the Declaration of Independence, the Constitution, and the Bill of Rights.

[55 FR 29578, July 20, 1990]

§1280.18 Artificial lighting in public areas.

Supplemental artificial lighting devices may be used with prior approval of the Public Affairs Officer (NXI) when filming documents in public areas of the National Archives Building subject to the following restrictions:

(a) Facsimiles shall be used in place of the Declaration of Independence, the Constitution, or the Bill of Rights if supplemental artificial lighting is to be used. When high intensity lighting is used, all other exhibited documents that fall within the boundaries of such illumination must be covered or replaced by facsimiles. If approval is granted for filming facsimiles or for filming other exhibited documents, a

high intensity light source may not expose any exhibited item to more than 500 foot-candles nor be used to illuminate any one item for more than five minutes. The use of high intensity lighting in an exhibit area may not exceed one hour.

(b) Ladders, scaffolding, and tripods may be used before regular hours, but must be kept at a distance from documents greater than the height of the equipment.

(c) Auxiliary power units may be used. Existing lights will not be replaced by higher wattage or intensity lights. A NARA electrician must be present at all times whenever there is a change to the normal power supply. Organizations who film after regular hours will be billed for the electrician's time.

[39 FR 11885, Apr. 1, 1974. Redesignated and amended at 50 FR 15723, 15728, Apr. 19, 1985; 52 FR 23822, June 25, 1987. Further redesignated and amended at 55 FR 29577, July 20, 1990; 55 FR 33904, Aug. 20, 1990]

§ 1280.20 The National Archives Library.

The National Archives Library is operated to meet the needs of researchers and NARA staff members. Other persons desiring to use library materials will generally be referred to public libraries and other possible sources of such materials.

[33 FR 4885, Mar. 22, 1968. Redesignated at 50 FR 15723, Apr. 19, 1985. Further redesignated at 55 FR 29577, July 20, 1990; 55 FR 33904, Aug. 20, 1990]

§ 1280.22 National Archives Theater and conference rooms.

The theater in the National Archives Building was designed and will be used primarily for furnishing reference services on the motion picture holdings of the National Archives. Conference rooms in the National Archives Building will be used for conferences and official meetings. When not required for such uses, conference rooms may be assigned to other organizations. Application for use of a room will be approved only if the purpose for which it is requested is educational or is related to the programs of the National Archives and Records Administration. The theater and conference rooms shall not be used to promote commercial enterprises or commodities, for political, sectarian, or similar purposes, or for meetings sponsored by profitmaking organizations. Use of the theater and conference rooms will not be authorized for any organization or group of individuals that engages in discriminatory practices proscribed in the Civil Rights Act of 1964 (42 U.S.C. 2000a, note).

[39 FR 11885, Apr. 1, 1974. Redesignated and amended at 50 FR 15723, 15728, Apr. 19, 1985. Further redesignated at 55 FR 29577, July 20, 1990; 55 FR 33904, Aug. 20, 1990]

§ 1280.24 Application for outside use of National Archives Theater and conference rooms.

(a) Applications for use of the theater and conference rooms shall be submitted in writing by the head of the requesting organization, or his duly authorized representative, at least 1 week in advance of the requested use. Applications for use shall be addressed to National Archives (NA), Washington, DC 20408, and shall include the following information:

(1) The name of the requesting organization;

(2) The date and the hours of contemplated use;

(3) A brief description of the programs;

(4) The number of persons expected to attend the meeting or performance (The capacity of the theater is 216 persons; conference rooms accommodate between 35 and 70 persons.);

(5) A statement regarding the intention to exhibit motion pictures or slides and, if so, the size (35mm or 16mm) of the film or slides, and whether the film to be shown is on nitrate or safety base; and

(6) Samples of any literature, folders, or posters to be distributed or exhibited at the meeting or performance.

(b) No program will be permitted to continue beyond 10 p.m.

(c) Applications for use on Saturdays, Sundays, holidays, or at times when the building is closed will be considered if fully justified.

(d) No admission fee will be charged, no indirect assessment will be made for admission, and no collection will be taken except as specifically authorized

by the Archivist of the United States for special nonprofit-making events which are held by organizations sponsored by the National Archives and Records Administration. Commercial advertising or the sale of articles is not permitted.

(e) The serving or consumption of food or beverages within the theater is prohibited. Food or beverages may be served in the conference rooms if approved in advance.

(f) Smoking within the theater and conference rooms is prohibited. Smoking is allowed only in designated smoking areas.

(g) If the projection of motion pictures or slides is a part of the program, operators will be furnished by the National Archives and Records Administration on a reimbursable basis.

(h) Posting of any material about the premises is subject to prior approval.

(i) All persons attending meetings or performances will be required to go directly to the theater, which is on the fifth floor, or to the assigned conference room. No one will be admitted to the parts of the building that are closed to the public.

[33 FR 4885, Mar. 22, 1968, as amended at 39 FR 11885, Apr. 1, 1974; 41 FR 7750, Feb. 20, 1976. Redesignated and amended at 50 FR 15723, 15728, Apr. 19, 1985; 52 FR 23823, June 25, 1987. Further redesignated at 55 FR 29577, July 20, 1990; 55 FR 33904, Aug. 20, 1990]

§ 1280.26 Archivist's Reception Room.

The Archivist's Reception Room is primarily intended for meetings and other functions of NARA. The Archivist may sponsor, co-sponsor or, if the room is not scheduled for use by NARA, authorize the use of the room by other Federal agencies for official government functions, or by private individuals and organizations. Such use by private individuals and groups must be for the benefit of or in connection with the archival and records activities administered by the National Archives and Records Administration and must be consistent with the public perception of the National Archives as a research and cultural institution. The National Archives Trust Fund Board refurbished the Archivist's Reception Room from private gifts and donations. In order to maintain this Room in its present condition, as well as to cover the cost of additional cleaning, guard and other required services, the use of this Room by private individuals and organizations requires a donation to the National Archives Trust Fund. Federal agencies using the room for official government functions shall reimburse NARA only for the cost of additional guard and NARA staff services. The Archivist's Reception Room shall not be used to promote commercial enterprises or products or for political, sectarian, or similar purposes. Use of the Room will not be authorized for any organization or group that engages in discriminatory practices proscribed by the Civil Rights Act of 1964, as amended.

[52 FR 23823, June 25, 1987. Redesignated at 55 FR 29577, July 20, 1990; 55 FR 33904, Aug. 20, 1990]

§ 1280.28 Application for outside use of the Archivist's Reception Room.

(a) Applications for use of the Archivist's Reception Room shall be submitted in writing by the private individual or by the head of the requesting organization or the duly authorized representative of the organization, normally 30 days in advance. Applications for use shall be submitted to the Assistant Archivist for Public Programs (NE), National Archives and Records Administration, Washington, DC 20408 and shall include the following:

(1) The name of the requesting organization or individual;

(2) The date and hours of contemplated use;

(3) A description of the purpose, anticipated number of attendees, and the name of the individual designated to serve as host and responsible official for the event;

(4) Whether audiovisual services are required (these must be provided by NARA on a reimbursible basis);

(5) Samples of any literature, folders, or posters to be distributed or exhibited.

(b) A donation to the National Archives Trust Fund to cover the costs involved in the maintenance and use of the Room is needed. Further information may be obtained from the Assistant Archivist for Public Programs.

(c) The Room is available from 8:00 a.m. until 9:30 p.m., Monday through Friday, and from 9:00 a.m. until 4:30 p.m. on Saturday. Use of the room at other hours requires the special approval of the Archivist. A NARA staff member must be available at all times when the room is in use.

(d) Those using the Room must obtain approval from NARA before distributing or displaying any item and must not misrepresent their identity to the public nor conduct any activities in a misleading or fraudulent manner. If any notice or advertisement is to mention the National Archives or incorporate its seal, the approval of the Archivist of the United States is required.

(e) Those using the Room must provide persons as needed to register guests, distribute approved literature, name tags, or similar material.

(f) NARA must approve in advance the use of a caterer who will bring beverages, food, or equipment into the National Archives Building. NARA must approve any equipment or decorations to be used and any entertainment to occur in the National Archives Building.

(g) No Government property shall be destroyed, displaced, or damaged by the user. The user must take prompt action to replace, return, restore, repair or repay NARA for any damage caused to Government property during the use of NARA facilities.

[52 FR 23823, June 25, 1987. Redesignated at 55 FR 29577, July 20, 1990; 55 FR 33904, Aug. 20, 1990]

Subpart C—Facilities in Presidential Libraries

§ 1280.40 Museum areas.

(a) Unless otherwise directed by the library director, the hours of admission to museums of the libraries are as follows:

(1) Monday through Saturday, 9 a.m. to 5 p.m., including Federal legal holidays.

(2) Sunday, 2 p.m. to 5 p.m. (10 a.m. to 5 p.m. from May 16 to September 15), including Federal legal holidays.

(3) Museums will be closed on Thanksgiving, Christmas, and New Year's days.

(b) Visitors to the museums of the libraries may be required to check all parcels and luggage at designated places.

(c) Eating and smoking are prohibited in the museums of the libraries and in other library areas except where designated by the library director.

[33 FR 4885, Mar. 22, 1968. Redesignated at 50 FR 15723, Apr. 19, 1985]

§ 1280.42 Auditoriums and other public spaces.

(a) Presidential library auditoriums and other public spaces in the library buildings and the library grounds are intended primarily for the use of the library in carrying out its programs. These areas may also be used by other organizations for lectures, seminars, meetings, and similar activities when these activities are sponsored, cosponsored, or authorized by the Library to further the library's interests, and when such activities will not interfere with the normal operation of the library. Any activities sponsored, cosponsored, or authorized by the library must be related to the mission and programs of the library and must be consistent with the public perception of the library as a research and cultural institution. Application for such use shall be made in writing to the library director (see § 1253.3 of this chapter for the address).

(b) Use of the auditoriums and other public spaces will not be authorized for any profitmaking, commercial advertising and sales, sectarian, or similar purpose or for any use inconsistent with those authorized in paragraph (a) of this section.

(c) No admission fee will be charged except by the library, no indirect assessment fees will be made for admission, and no collections will be taken. The library director may assess additional charges to reimburse the Government for expenses incurred as a result of the use by groups of library facilities.

[48 FR 41770, Sept. 19, 1983. Redesignated at 50 FR 15723, Apr. 19, 1985, and amended at 52 FR 23823, June 25, 1987]

§ 1280.44 Supplemental rules.

Library directors may establish appropriate supplemental rules governing

use of Presidential libraries and adjacent buildings and areas under NARA control.

[52 FR 23823, June 25, 1987]

§1280.46 Book collections.

The book collections of Presidential libraries are available to researchers needing the unique resources of such libraries and to NARA staff members. Other persons desiring to use the book collections will generally be referred to public libraries and other possible sources of such materials.

[35 FR 18737, Dec. 10, 1970. Redesignated at 50 FR 15723, Apr. 19, 1985]

§1280.48 Photographing documents.

(a) Visitors are permitted to take photographs in Presidential libraries and adjacent buildings open to the public, subject to restrictions set forth in paragraph (c) of this section.

(b) Photographs for news, advertising, or commercial purpose may be taken only after the Presidential library director approves the request.

(c) Artificial light devices shall not be used anywhere in a Presidential library where such use may cause damage to documents. Persons desiring to use photolighting devices shall request special permission from the director of the Presidential library concerned and shall follow procedures prescribed in §1280.14(c).

[39 FR 11885, Apr. 1, 1974. Redesignated at 50 FR 15723, Apr. 19, 1985]

Subpart D—Federal Records Centers and National Archives Field Branches

§1280.60 Use of conference rooms.

Conference rooms in Federal Records Centers and National Archives Field Branches will be used for official meetings and for conferences sponsored by NARA. When not required for such use, assignments for other purposes during normal working hours may be made. Applications for such use will be approved only if the purpose for which it is requested is educational or is related to NARA programs. Applications for such use shall be made to the Federal Records Center Director or the National Archives Field Branch Director (see §1253.6 of this chapter for the address).

[52 FR 23823, June 25, 1987]

§1280.62 Restrictions on use.

Use of the conference rooms will not be authorized for any profitmaking, political, sectarian, or similar purpose or for any organization or group that engages in discriminatory practices proscribed in the Civil Rights Act of 1964 (42 U.S.C. 2000a, note).

[39 FR 11885, Apr. 1, 1974. Redesignated and amended at 50 FR 15723, 15728, Apr. 19, 1985]

PART 1284—EXHIBITS

Sec.
1284.1 Scope of part.
1284.20 Temporary exhibition of privately-owned material.

AUTHORITY: 44 U.S.C. 2104(a).

§1284.1 Scope of part.

This part sets forth policies and procedures concerning the exhibition of materials at the National Archives Building.

[55 FR 25307, June 21, 1990]

§1284.20 Temporary exhibition of privately-owned material.

(a) Documents, paintings, or other objects belonging to private individuals or organizations normally will not be accepted for display at the National Archives Building except as part of a NARA-produced exhibit.

(b) NARA may accept for temporary special exhibit at the National Archives Building privately-owned documents or other objects under the following conditions:

(1) The material to be displayed relates to the institutional history of the National Archives and Records Administration or its predecessor organizations, the National Archives Establishment and the National Archives and Records Service;

(2) Exhibition space is available in the building that the NARA Office of Public Programs and the Document Conservation Branch judge to be appropriate in terms of security, light level,

climate control, and available exhibition cases or other necessary fixtures; and

(3) NARA has resources (such as exhibit and security staff) available to produce the special exhibit.

(c) The Assistant Archivist for Public Programs (NE), in conjunction with the NARA General Counsel when appropriate, shall review all offers to display privately-owned material and shall negotiate the terms of exhibition for offers that can be accepted. The lender shall provide evidence of title to and authenticity of the item(s) to be displayed before any loan agreement is executed.

(d) The Assistant Archivist shall inform the offeror of NARA's decision within 60 days.

[55 FR 25307, June 21, 1990]

PARTS 1285—1299 [RESERVED]

CHAPTER XIV—ASSASSINATION RECORDS REVIEW BOARD

Part		*Page*
1400	Guidance for interpretation and implementation of the President John F. Kennedy Assassination Records Collection Act of 1992 (JFK Act)	668
1405	Rules implementing the Government in the Sunshine Act	671
1410	Rules implementing the Freedom of Information Act	674
1415	Rules implementing the Privacy Act	681
1416—1499	[Reserved]	

PART 1400—GUIDANCE FOR INTERPRETATION AND IMPLEMENTATION OF THE PRESIDENT JOHN F. KENNEDY ASSASSINATION RECORDS COLLECTION ACT OF 1992 (JFK ACT)

Sec.

1400.1 Scope of assassination record.
1400.2 Scope of additional records and information.
1400.3 Sources of assassination records and additional records and information.
1400.4 Types of materials included in scope of assassination record and additional records and information.
1400.5 Requirement that assassination records be released in their entirety.
1400.6 Originals and copies.
1400.7 Additional guidance.
1400.8 Implementing the JFK Act—Notice of Assassination Record Designation.

AUTHORITY: 44 U.S.C. 2107.

SOURCE: 60 FR 33349, June 28, 1995, unless otherwise noted.

§ 1400.1 Scope of assassination record.

(a) An *assassination record* includes, but is not limited to, all records, public and private, regardless of how labeled or identified, that document, describe, report on, analyze or interpret activities, persons, or events reasonably related to the assassination of President John F. Kennedy and investigations of or inquiries into the assassination.

(b) An *assassination record* further includes, without limitation:

(1) All records as defined in Section 3(2) of the JFK Act;

(2) All records collected by or segregated by all Federal, state, and local government agencies in conjunction with any investigation or analysis of or inquiry into the assassination of President Kennedy (for example, any intra-agency investigation or analysis of or inquiry into the assassination; any interagency communication regarding the assassination; any request by the House Select Committee on Assassinations to collect documents and other materials; or any inter- or intra-agency collection or segregation of documents and other materials);

(3) Other records or groups of records listed in the Notice of Assassination Record Designation, as described in § 1400.8 of this chapter.

§ 1400.2 Scope of additional records and information.

The term *additional records and information* includes:

(a) All documents used by government offices and agencies during their declassification review of assassination records as well as all other documents, indices, and other material (including but not limited to those that disclose cryptonyms, code names, or other identifiers that appear in assassination records) that the Assassination Records Review Board (Review Board) has a reasonable basis to believe may constitute an assassination record or would assist in the identification, evaluation or interpretation of an assassination record. The Review Board will identify in writing those records and other materials it intends to seek under this section.

(b) All training manuals, instructional materials, and guidelines created or used by the agencies in furtherance of their review of assassination records.

(c) All records, lists, and documents describing the procedure by which the agencies identified or selected assassination records for review.

(d) Organizational charts of government agencies.

(e) Records necessary and sufficient to describe the agency's:

(1) Records policies and schedules;

(2) Filing systems and organization;

(3) Storage facilities and locations;

(4) Indexing symbols, marks, codes, instructions, guidelines, methods, and procedures;

(5) Search methods and procedures used in the performance of the agencies' duties under the JFK Act; and

(6) Reclassification to a higher level, transfer, destruction, or other information (*e.g.*, theft) regarding the status of assassination records.

(f) Any other record that does not fall within the scope of assassination record as described in § 1400.1, but which has the potential to enhance, enrich, and broaden the historical record of the assassination.

§1400.3 Sources of assassination records and additional records and information.

Assassination records and additional records and information may be located at, or under the control of, without limitation:

(a) Agencies, offices, and entities of the executing, legislative, and judicial branches of the Federal Government;

(b) Agencies, offices, and entities of the executive, legislative, and judicial branches of state and local governments;

(c) Record repositories and archives of Federal, state, and local governments, including presidential libraries;

(d) Record repositories and archives of universities, libraries, historical societies, and other similar organizations;

(e) Individuals who possess such records by virtue of service with a government agency, office, or entity;

(f) Persons, including individuals and corporations, who have obtained such records from sources identified in paragraphs (a) through (e) of this section;

(g) Persons, including individuals and corporations, who have themselves created or have obtained such records from sources other than those identified in paragraphs (a) through (e) of this section;

(h) Federal, state, and local courts where such records are being held under seal; or

(i) Foreign governments.

§1400.4 Types of materials included in scope of assassination record and additional records and information.

The term *record* in *assassination record* and *additional records and information* includes, for purposes of interpreting and implementing the JFK Act:

(a) papers, maps, and other documentary material;

(b) photographs;

(c) motion pictures;

(d) sound and video recordings;

(e) machine readable information in any form; and

(f) artifacts.

§1400.5 Requirement that assassination records be released in their entirety.

An assassination record shall be released in its entirety except for portions specifically postponed pursuant to the grounds for postponement of public disclosure of records established in §2107.6 of the JFK Act, and no portion of any assassination record shall be withheld from public disclosure solely on grounds of non-relevance unless, in the Review Board's sole discretion, release of part of a record is sufficient to comply with the intent and purposes of the JFK Act.

§1400.6 Originals and copies.

(a) For purposes of determining whether originals or copies of assassination records will be made part of the President John F. Kennedy Assassination Records Collection (JFK Assassination Records Collection) established under the JFK Act, the following shall apply:

(1) In the case of papers, maps, and other documentary materials, the Review Board may determine that record copies of government records, either the signed original, original production or a reproduction that has been treated as the official record maintained to chronicle government functions or activities, may be placed in the JFK Assassination Records Collection;

(2) In the case of other papers, maps, and other documentary material, the Review Board may determine that a true and accurate copy of a record in lieu of the original may be placed in the JFK Assassination Records Collection;

(3) In the case of photographs, the original negative, whenever available (otherwise, the earliest generation print that is a true and accurate copy), may be placed in the JFK Assassination Records Collection;

(4) In the case of motion pictures, the camera original, whenever available (otherwise, the earliest generation print that is a true and accurate copy), may be placed in the JFK Assassination Records Collection;

(5) In the case of sound and video recordings, the original recording, whenever available (otherwise, the earliest

generation copy that is a true and accurate copy), may be placed in the JFK Assassination Records Collection;

(6) In the case of machine-readable information, a true and accurate copy of the original (duplicating all information contained in the original and in a format that permits retrieval of the information), may be placed in the JFK Assassination Records Collection; and

(7) In the case of artifacts, the original objects themselves may be placed in the JFK Assassination Records Collection.

(b) To the extent records from foreign governments are included in the JFK Assassination Records Collection, copies of the original records shall be sufficient for inclusion in the collection.

(c) In cases where a copy, as defined in paragraph (a) of this section, is authorized by the Review Board to be included in the JFK Assassination Records Collection, the Review Board may require that a copy be certified if, in its discretion, it determines a certification to be necessary to ensure the integrity of the JFK Assassination Records Collection. In cases where an original, as defined in paragraph (a) of this section, is required for inclusion in the JFK Assassination Records Collection, the Review Board may, at its discretion, accept the best available copy. In such cases that records included in the JFK Assassination Records Collection, whether originals or copies, contain illegible portions, such records shall have attached thereto a certified transcription of the illegible language to the extent practicable.

(d) For purposes of implementing the JFK Act, the term *copy* means a true and accurate photocopy duplication by a means appropriate to the medium of the original record that preserves and displays the integrity of the record and the information contained in it.

(e) Nothing in this section shall be interpreted to suggest that additional copies of any assassination records contained in the JFK Assassination Records Collection are not also assassination records that, at the Review Board's discretion, may also be placed in the JFK Assassination Records Collection.

(f) Nothing in this section shall be interpreted to prevent or to preclude copies of any electronic assassination records from being reformatted electronically in order to conform to different hardward and/or software requirements of audiovisual or machine readable formats if such is the professional judgment of the National Archives and Records Administration.

§ 1400.7 Additional guidance.

(a) A government agency, office, or entity includes, for purposes of interpreting and implementing the JFK Act, all current, past, and former departments, agencies, offices, divisions, foreign offices, bureaus, and deliberative bodies of any Federal, state, or local government and includes all inter- or intra-agency working groups, committees, and meetings that possess or created records relating to the assassination of President John F. Kennedy.

(b) The inclusion of artifacts in the scope of the term assassination record is understood to apply solely to the JFK Assassination Records Collection and to implement fully the terms of the JFK Act and has no direct or indirect bearing on the interpretation or implementation of any other statute or regulation.

(c) Whenever artifacts are included in the JFK Assassination Records Collection, it shall be sufficient to comply with the JFK Act if the public is provided access to photographs, drawings, or similar materials depicting the artifacts. Additional display of or examination by the public of artifacts in the JFK Assassination Records Collection shall occur under the terms and conditions established by the National Archives and Records Administration to ensure their preservation and protection for posterity.

(d) The terms and, or, any, all, and the plural and singular forms of nouns shall be understood in their broadest and most inclusive sense and shall not be understood to be terms of limitation.

(e) Unless the Review Board in its sole discretion directs otherwise, records that are identified with respect to a particular person shall include all records ralating to that person that

use or reflect the true name or any other name, pseudonym, codeword, symbol number, cryptonym, or alias used to identify that person.

(f) Unless the Review Board in its sole discretion directs otherwise, records that are identified by the Review Board with respect to a particular operation or program shall include all records, pertaining to that program by any other name, pseudonym, codeword, symbol, number, or cryptonym.

§1400.8 Implementing the JFK Act—Notice of Assassination Record Designation.

(a) A Notice of Assassination Record Designation (NARD) shall be the mechanism for the Review Board to announce publicly its determination that a record or group of records meets the definition of assassination records.

(b) Notice of all NARDs will be published in the FEDERAL REGISTER within 30 days of the decision to designate such records as assassination records.

(c) In determining to designate such records as assassination records, the Review Board must determine that the record or group of record will more likely than not enhance, enrich, and broaden the historical record of the assassination.

PART 1405—RULES IMPLEMENTING THE GOVERNMENT IN THE SUNSHINE ACT

Sec.

1405.1 Applicability.
1405.2 Definitions.
1405.3 Open meetings requirement.
1405.4 Grounds on which meetings may be closed or information may be withheld.
1405.5 Procedures for closing meetings, or withholding information, and requests by affected persons to close a meeting.
1405.6 Procedures for public announcements of meetings.
1405.7 Changes affecting a meeting following the public announcement of a meeting.
1405.8 Availability and retention of transcripts, recordings, and minutes, and applicable fees.
1405.9 Severability.

AUTHORITY: 5 U.S.C. 552b; 44 U.S.C. 2107.

SOURCE: 60 FR 45336, Aug. 31, 1995, unless otherwise noted.

§1405.1 Applicability.

(a) This part implements the provisions of the Government in the Sunshine Act (5 U.S.C. 552b). These procedures apply to meetings of the Review Board. The Review Board may waive the provisions set forth in this Part to the extent authorized by law.

(b) Requests for all documents other than the transcripts, recordings, and minutes described in 1405.8 shall be governed by Review Board regulations pursuant to the Freedom of Information Act (5 U.S.C. 552).

§1405.2 Definitions.

As used in this part:

Chairperson means the Member elected by the Board to serve in said position pursuant to 44 U.S.C. 2107.7(f).

General Counsel means the Review Board's principal legal officer, or an attorney serving as Acting General Counsel.

Government office means any office of the Federal Government that has possession or control of assassination records as set forth in 44 U.S.C. 2107.3(5).

Meeting means the deliberations of three or more Members where such deliberations determine or result in the joint conduct or disposition of official Review Board business. A meeting does not include:

(1) Notation voting or similar consideration of business, whether by circulation of material to the Members individually in writing or by a polling of the Members individually by telephone.

(2) Action by three or more Members to:

(i) Open or to close a meeting or to release or to withhold information pursuant to §1405.5;

(ii) Set an agenda for a proposed meeting;

(iii) Call a meeting on less than seven days' notice as permitted by §1405.6(b); or

(iv) Change the subject matter or the determinations to open or to close a publicly announced meeting under §1405.7(b).

(3) A session attended by three or more Members for which the purpose is to receive briefings from the Review Board's staff or expert consultants,

provided that members of the Review Board do not engage in deliberations at such sessions that determine or result in the joint conduct or disposition of official Review Board business on such matters. The General Counsel will inform the Review Board if developing discussions at a briefing or gathering should be deferred until a notice of an open meeting can be published in the FEDERAL REGISTER.

(4) A session attended by three or more Members for which the purpose is to receive informational briefings from representatives of government offices discussing classified or otherwise restricted information in accordance with the provisions of the JFK Act, provided that Members of the Review Board do not engage in deliberations at such sessions that determine or result in the joint conduct or disposition of official Review Board business on such matters.

(5) A gathering of three or more Members for the purpose of holding informal preliminary discussions or exchanges of views, but that does not effectively predetermine official Review Board action.

Member means a current member of the Review Board as provided by law.

Presiding Officer means the Chairperson or any other Member authorized by the Review Board to preside at a meeting.

Review Board means the Assassination Records Review Board created pursuant to 44 U.S.C. 2107.7.

§ 1405.3 Open meetings requirement.

Any meetings of the Review Board, as defined in § 1504.2, shall be conducted in accordance with this part. Except as provided in § 1405.4, the Review Board's meetings, or portions thereof, shall be open to public observation.

§ 1405.4 Grounds on which meetings may be closed or information may be withheld.

A meeting may be closed when the Review Board properly determines that an open meeting would disclose information that may be withheld under the criteria enumerated below. Similarly, information that otherwise would be required to be disclosed under §§ 1405.5, 1405.6, and 1405.7 may also be withheld under these criteria. All records of closed meetings shall, however, be disclosed at a future date consistent with the terms and requirements of the JFK Act. Except in a case where the Review Board finds that the public interest requires otherwise, the criteria for closing meetings are whether information disclosed at such meetings is likely to:

(a) Disclose matters that are:

(1) Specifically authorized under criteria established by the Executive Order to be kept secret in the interests of national defense or foreign policy; and

(2) In fact properly classified pursuant to such Executive order;

(b) Relate solely to the internal personnel rules and practices of the Review Board;

(c) Disclose matters specifically exempted from disclosure by statute (other than 5 U.S.C. 552), provided that such statute:

(1) Requires that the matters be withheld from the public in such a manner as to leave no discretion on the issue; or

(2) Establishes particular criteria for withholding or refers to particular types of matters to be withheld.

(d) Discloses trade secrets and commercial or financial information obtained from a person and is privileged or confidential;

(e) Involves accusing any person of a crime, or formally censuring any person;

(f) Discloses information of a personal nature where disclosure would constitute a clearly unwarranted invasion of personal privacy;

(g) Discloses investigatory records compiled for law enforcement purposes, or information which, if written, would be contained in such records, but only to the extent that the production of such records or information would:

(1) Interfere with enforcement proceedings;

(2) Deprive a person of a right to a fair trial or an impartial adjudication;

(3) Constitute an unwarranted invasion to personal privacy;

(4) Disclose the identity of a confidential source and, in the case of a record compiled by a criminal law enforcement authority in the course of a criminal investigation, or by an agency

conducting a lawful national security intelligence investigation, confidential information furnished only by the confidential source;

(5) Disclose investigative techniques and procedures; or

(6) Endanger the life or physical safety of law enforcement personnel;

(h) Specifically concern the Review Board's issuance of a subpoena, or the Review Board's participation in a civil action or proceeding, an action in a foreign court or international tribunal, or an arbitration, or the initiation, conduct, or disposition by the Review Board of a particular case of formal agency adjudication pursuant to the procedures in 5 U.S.C. 554 or otherwise involving a determination on the record after opportunity for a hearing; or

(i) Disclose other information for which the Sunshine Act provides an exemption to the open meeting requirements of the Act.

§1405.5 Procedures for closing meetings, or withholding information, and requests by affected persons to close a meeting.

(a) A majority of all Members may vote to close a meeting or withhold information pertaining to that meeting. A separate vote shall be taken with respect to each action under §1405.4. A majority of the Review Board may act by taking a single vote with respect to a series of meetings, a portion or portions of which are proposed to be closed to the public, or with respect to any information concerning such series of meetings, so long as each meeting in such series involves the same particular matters and is scheduled to be held no more than thirty days after the initial meeting in such series. Each Member's vote under the paragraph shall be recorded and no proxies shall be permitted.

(b) Any person whose interests may be directly affected if a portion of a meeting is open may request the Review Board to close that portion of the meeting on the grounds referred to in §1405.4 (e), (f), or (g). Requests, with reasons in support thereof, should be submitted to the Office of the General Counsel, Assassination Records Review Board, 600 E Street, NW., 2nd Floor, Washington, DC 20530. On the motion of any Member, the Review Board shall determine by recorded vote whether to grant the request.

(c) Within one working day of any vote taken pursuant to this section, the Review Board shall make publicly available a written copy of such vote reflecting the vote of each Member on the question. If a portion of a meeting is to be closed to the public, the Review Board shall make available a full written explanation of its action closing the meeting (or portion thereof) and a list of all persons expected to attend the meeting and their affiliation.

(d) For each closed meeting, the General Counsel shall publicly certify that, in his or her opinion, the meeting may be closed to the public and shall state each relevant exemptive provision. A copy of such certification shall be available for public inspection.

(e) For each closed meeting, the Presiding Officer shall issue a statement setting forth the time, place, and persons present. A copy of such statement shall be available for public inspection.

(f) For each closed meeting, with the exception of a meeting closed pursuant to §1405.4(h), the Review Board shall maintain a complete transcript or electronic recording adequate to record fully the proceedings of each meeting. For meetings or portions thereof that are closed pursuant to 1405.4(h), the Review Board may maintain a set of minutes in lieu of such transcript or recording. Such minutes shall fully and clearly describe all matters discussed and shall provide a full and accurate summary of any actions taken, and the reasons therefor, including a description of each of the views expressed on any item and the record of any roll call vote. The records of closed meetings, in addition to all other records of the Review Board, shall be included as permanent records in the JFK Collection at the National Archives as provided by the JFK Act.

§1405.6 Procedures for public announcements of meetings.

(a) For each meeting, the Review Board shall make public announcement, at least one week before the meeting, of the:

(1) Time of the meeting;

(2) Place of the meeting;

(3) Subject matter of the meeting;

(4) Whether the meeting is to be open or closed; and

(5) The name and business telephone number of the official designated by the Review Board to respond to requests for information about the meeting.

(b) The one week advance notice required by paragraph (a) of this section may be reduced only if:

(1) A majority of all Members determines by recorded vote that Review Board business requires that such meeting be scheduled in less than seven days; and

(2) The public announcement required by paragraph (a) of this section is made at the earliest practicable time.

§ 1405.7 Changes affecting a meeting following the public announcement of a meeting.

(a) After there has been a public announcement of a meeting, the time or place of such meeting may be changed only if the Review Board publicly announces such change at the earliest practicable time. Members need not approve such change by recorded vote.

(b) After there has been a public announcement of a meeting, the subject matter of such meeting, or the determination of the Review Board to open or to close a meeting or a portion thereof to the public, may be changed only when:

(1) A majority of all Members determines, by recorded vote, the Review Board business so requires and that no earlier announcement of the change was possible; and

(2) The Review Board publicly announces such change and the vote of each Member thereof at the earliest practicable time.

§ 1405.8 Availability and retention of transcripts, recordings, and minutes, and applicable fees.

In accordance with the provisions of the JFK Act, the Review Board shall retain the transcript, electronic recording, or minutes of the discussion of any item on the agenda or of any testimony received at a closed meeting for inclusion as a permanent record in the JFK Collection at the National Archives once the work of the Review Board is completed. The public shall have access to such records consistent with the provisions of the JFK Act which, according to the understanding of the Review Board, supersedes the Sunshine Act and FOIA. Copies of any nonexempt transcript or minutes, or transaction of such recordings disclosing the identity of each speaker, shall be furnished to any person at the actual cost of transcript or duplication unless otherwise provided by the terms of the JFK Act. If at some later time the Review Board determines that there is no further justification for withholding a portion of a transcript, electronic recording, or minutes or other item of information for the public which had been previously withheld, such portion or information shall be made publicly available.

§ 1405.9 Severability.

If any provision of this part of the application of such provision to any person or circumstance, is held invalid, the reminder of this part of the application of such provision to persons or circumstances other than those as to which it is held invalid, shall not be affected thereby.

PART 1410—RULES IMPLEMENTING THE FREEDOM OF INFORMATION ACT

Sec.

1410.5 Scope.
1410.10 Definitions.
1410.15 Requests for Review Board records available through the Public Reading Room.
1410.20 Review Board records exempt from public disclosure.
1410.25 Requests for Review Board records not available through the Public Reading Room (FOIA requests).
1410.30 Requests for waiver or reduction of fees.
1410.35 Fees for Review Board record requests.
1410.40 Processing of FOIA requests.
1410.45 Procedure for appeal of denial of requests for Review Board records and denial of requests for fee waiver or reduction.
1410.50 Requests for classified agency records.

AUTHORITY: 5 U.S.C. 552; 44 U.S.C. 2107.

SOURCE: 60 FR 45339, Aug. 31, 1995, unless otherwise noted.

§ 1410.5 Scope.

This part contains the Review Board's regulations implementing the Freedom of Information Act, 5 U.S.C. 552.

§ 1410.10 Definitions.

(a) *Review Board record* is a record in the possession and control of the Review Board that is associated with Review Board business. Review Board records do not include:

(1) Publicly available books, periodicals, films, sound or video recordings, photographs, or other publications that are owned or copyrighted by nonfederal sources that the Review Board acquires and uses for reference and research purposes;

(2) Records owned by another Federal agency that the Review Board temporarily holds for the purpose of conducting its review under the President John F. Kennedy Assassination Records Collection Act of 1992 (JFK Act) (FOIA requests for such documents should be directed to the originating agency);

(3) Records delivered to the Review Board for transfer to the JFK Collection at the National Archives and Records Administration (NARA).

(b) *Designated FOIA Officer* means the person designated by the Executive Director to administer the Review Board's activities pursuant to the regulations in this part. The Designated FOIA Officer shall also be the Review Board officer having custody of or responsibility for Review Board records and shall be the Review Board's officer responsible for authorizing or denying production of Review Board records upon request filed pursuant to § 1410.25.

(c) *Executive Director* means the principal staff official appointed by the Review Board pursuant to 44 U.S.C. 2107.8(a).

(d) *Review Board* means the Assassination Records Review Board created pursuant to 44 U.S.C. 2107.7.

§ 1410.15 Requests for Review Board records available through the Public Reading Room.

(a) A Public Reading Room will be maintained at the Review Board headquarters and will be open between 10 a.m. and 4:30 p.m., Monday through Friday, except on Federal holidays. Documents may be obtained in person from the Public Reading Room.

(b) The Public Reading Room records will include the following (if and when such records are created):

(1) The Review Board's rules and regulations;

(2) Statements of policy adopted by the Review Board;

(3) Transcripts of public hearings;

(4) Review Board orders, decisions, notices, and other formal actions;

(5) Copies of all unclassified filings, certifications, pleadings, Review Board records, briefs, orders, judgments, decrees, and mandates in court proceedings to which the Review Board is a party and the correspondence with the courts or clerks of court;

(6) Unclassified reports to Congress in which the Review Board's operations during a past fiscal year are described;

(7) Administrative staff manuals and instructions to staff to the extent that such manuals or instructions affect a member of the public; and

(8) Indices of the documents identified in this section, but not including drafts thereof.

§ 1410.20 Review Board records exempt from public disclosure.

The Review Board will make all Review Board records available for inspection and copying, except that it may exempt from release those portions of:

(a) Review Board records specifically authorized under criteria established by an Executive Order to be kept secret in the interest of national defense or foreign policy, and that are in fact properly classified pursuant to such Executive Order;

(b) Review Board records related solely to the internal personnel rules and practices of the Review Board;

(c) Review Board records specifically exempted from disclosure by statute (other than 5 U.S.C. 552), provided that such statute:

(1) Requires that the matters be withheld from the public in such a manner as to leave no discretion on the issue, or

(2) Establishes particular criteria for withholding or refers to particular types of matters to be withheld;

(d) Trade secrets and commercial or financial information obtained from a person and privileged or confidential;

(e) Inter-agency or intra-agency memoranda or letters which would not be available by law to a party other than an agency in litigation with the agency;

(f) Personnel and medical files and similar files the disclosure of which would constitute a clearly unwarranted invasion of personal privacy;

(g) Records or information compiled for law enforcement purposes, but only to the extent that the production of such law enforcement records or information:

(1) Could reasonably be expected to interfere with enforcement proceedings;

(2) Would deprive a person of a right to a fair trial or an impartial adjudication;

(3) Could reasonably be expected to constitute an unwarranted invasion of personal privacy;

(4) Could reasonably be expected to disclose the identify of a confidential source, including a state, local, or foreign agency or authority or any private institution which furnished information on a confidential basis, and, in the case of a record of information compiled by a criminal law enforcement authority in the course of a criminal investigation or by an agency conducting a lawful national security intelligence investigation, information furnished by a confidential source;

(5) Would disclose techniques and procedures for law enforcement investigations or prosecutions, or would disclose guidelines for law enforcement investigations or prosecutions if such disclosure could reasonably be expected to risk circumvention of the law; or

(6) Could reasonably be expected to endanger the life or physical safety of any individual

(h) Contained in or related to examination, operating, or condition reports prepared by, on behalf of, or for the use of an agency responsible for the regulation or supervision of financial institutions; or

(i) Geological and geophysical information and data, including maps, concerning wells.

§ 1410.25 Requests for Review Board records not available through the Public Reading Room (FOIA Requests).

(a) Upon the request of any person, the Review Board shall make available for public inspection and copying any reasonably described Review Board record in the possession and control of the Review Board, but not available through the Public Reading Room, subject to the provisions of this part.

(b) A person may request access to Review Board records that are not available through the Public Reading Room by using the following procedures:

(1) The request must be in writing and must reasonably describe the Review Board records requested to enable Review Board personnel to locate them with a reasonable amount of effort. A request for all Review Board records falling within a reasonably specific and well-defined category shall be regarded as conforming to the statutory requirement that Review Board records be reasonably described. Where possible, specific information such as dates or titles that may help identify the Review Board records should be supplied by the requester, including the names and titles of Review Board personnel who may have been contacted regarding the request prior to the submission of the written request.

(2) The request should be addressed to the Designated FOIA Officer, and clearly marked ''Freedom of Information Act Request.'' The address for such requests is: Designated FOIA Officer, Assassination Records Review Board, 600 E Street, N.W., 2nd Floor, Washington, D.C. 20530. Requests must be either mailed or hand-delivered to the above address. Hand-delivered requests will be received between 8:30 a.m. and 5 p.m., Monday through Friday, except on Federal holidays. For purposes of calculating the time for response to the request under § 1410.40, the request shall not be deemed to have been received until it is in the possession of the Designated FOIA Officer or

such other person who may be responsible for receiving such requests.

(3) The request must include:

(i) A statement by the requester of a willingness to pay the fee applicable under §1410.35(b), or to pay that fee not to exceed a specific amount, or

(ii) A request for waiver or reduction of fees.

No request shall be deemed to have been received until the Review Board has received a statement of willingness to pay, as indicated in paragraph (b)(3)(i), of this section or has received and approved a request for waiver or reduction of fees.

(c) Requests for Review Board records containing information received from another agency, or records prepared jointly by the Review Board and other agencies, and that do not fall under category §1410.10(a)(2) above, shall be treated as requests for Review Board records. The Designated FOIA Officer shall, however, coordinate with the appropriate official of the other agency. The notice of determination to the requester, in the event part or all of the record is recommended for denial by the other agency, shall cite the other agency denying officials as well as the Designated FOIA Officer if a denial by the Review Board is also involved.

(d) If a request does not reasonably describe the Review Board records sought, as provided in paragraph (b) of this section, the Review Board response shall specify the reasons why the request failed to meet those requirements and shall offer the requester the opportunity to confer with knowledgeable Review Board personnel in an attempt to restate the request. If additional information is needed from the requester to render the agency records reasonably described, any restated request submitted by the requester shall be treated as an initial request for purpose of calculating the time for response under §1410.40.

(e) The Review Board will not be required to create new agency records, compile lists of selected items from its files, or create new statistical or other data.

(f) The Review Board staff may also respond to oral, unmarked, or generally stated requests for information and documents even though those requests do not comply with the provisions of this rule.

§1410.30 Request for waiver or reduction of fees.

(a) The Review Board shall collect fees for record requests made under §1410.25 as provided in §1410.35(b), unless the Review Board grants a written request for a waiver or reduction of fees. The Designated FOIA Officer shall make a determination on a fee waiver or reduction request within five working days of the request coming into his or her possession. If the determination is made that the written request for a waiver or reduction of fees does not meet the requirements of this section, the Designated FOIA Officer shall inform the requester that the request for waiver or reduction of fees is being denied and set forth the appeal rights under §1410.45.

(b) A person requesting the Review Board to waive or reduce search, review, or duplication fees shall:

(1) Describe the purpose for which the requester intends to use the requested information;

(2) Explain the extent to which the requester will extract and analyze the substantive content of the Review Board record;

(3) Describe the nature of the specific activity or research in which the Review Board records will be used and the specific qualification the requester possesses to utilize information for the intended use in such a way that it will contribute to public understanding of the operations or activities of the Government;

(4) Describe the likely impact of disclosure of the requested records on the public's understanding of the subject as compared to the level of understanding of the subject existing prior to disclosure;

(5) Describe the size and nature public to whose understanding a contribution will be made;

(6) Describe the intended means of dissemination to the general public;

(7) Indicate if public access to information will be provided free of charge or provided for an access or publication fee; and

(8) Describe any commercial or private interest the requester or any other party has in the Review Board records sought.

(c) The Review Board shall waive or reduce fees, without further specific information from the requester if, from information provided with the request for Review Board records made under § 1410.25, it can determine that it is likely to contribute significantly to public understanding of the operations or activities of the Government and is not primarily in the commercial interest of the requester.

(d) In making a determination regarding a request for a waiver or reduction of fees, the Review Board shall consider the following factors:

(1) Whether disclosure is likely to contribute significantly to public understanding of Government operations or activities, and

(2) Whether the requester has a commercial interest and, if so, the extent of any interests and how they would be furthered by the disclosure of the requested Review Board records.

§ 1410.35 Fees for Review Board record requests.

(a) *Fees for Review Board records available through the Public Reading Room.* Duplication fees charged shall be limited to the costs of duplication of the requested Review Board records or the cost to have them duplicated. A schedule of fees for this duplication service is set forth at paragraph (b)(6) of this section. A person may also obtain a copy of the schedule of fees in person or by mail from the Public Reading Room.

(b) *Fees for Review Board records not available through the Public Reading Room (FOIA) requests).*

(1) *Definitions.* For the purpose of paragraph (b) of this section:

Commercial use request means a request from or on behalf of one who seeks information for a use or purpose that furthers the commercial, trade, or profit interests of the requester or the person on whose behalf the request is made. In determining whether a requester properly belongs in this category, the Review Board must determine the use to which a requester will put the documents requested. Moreover, where the Review Board has reasonable cause to doubt the use to which a requester will put the records sought, or where that use is not clear from the request itself, the Review Board will seek additional clarification from the Office of Management and Budget before assigning the request to a specific category.

Direct costs means those expenditures which the Review Board incurs in search, review, and duplication, to respond to requests under § 1410.25. Direct costs include, for example, the salary and benefits cost of Review Board employees applied to time spent in responding to the request and the cost of operating duplicating machinery. Not included in direct costs are overhead expenses such as cost of space, and heating or lighting the facility in which the Review Board records are stored.

Educational institution refers to a preschool, a public or private elementary or secondary school, an institution of undergraduate higher education, an institution of graduate higher education, an institution of professional education, and an institution of vocational education, which operates a program or programs of scholarly research.

Noncommercial scientific institution refers to an institution that is not operated on a commercial basis and which is operated solely for the purpose of conducting scientific research the results of which are not intended to promote any particular product or industry.

Representative of the news media refers to any person actively gathering news for an entity that is organized and operated to publish or broadcast news to the public, and may include cable casting or computer on-line dissemination if offered as a service that is organized and operated to disseminate news to the public. The term ''news'' means information that is about current events or that would be of current interest to the public. Examples of news media entities include television or radio stations broadcasting to the public at large, and publishers of periodicals (but only in those instances when the periodicals can qualify as disseminations of ''news'') who make their products available for free and or for purchase or

subscription by the general public. These examples are not intended to be all-inclusive. A ''freelance'' journalist may be regarded as working for a news organization if the journalist can demonstrate a solid basis for expecting publication through that organization, even though the journalist is not actually employed by the news organization. A publication contract is the best proof, but the Review Board may also look to the past publication record of a requester in making this determination.

(2) *Fees.*

(i) If the Review Board determines that the documents are requested for commercial use, it shall charge the average salary rate, including benefits, for Review Board employees, for document search time and for document review time, in addition to the costs of duplication as established in the schedule of fees in paragraph (b)(6) of this section.

(ii) If documents are not sought for commercial use and the request is made by an educational or noncommercial scientific institution, whose purpose is scholarly or scientific research, or a representative of the news media, the Review Board's charges shall be limited to the direct costs of duplication as established in the schedule of fees in paragraph (b)(6) of this section. There shall be no charge for the first 100 pages of duplication.

(iii) For a request not described in paragraphs (b)(2)(i) or (b)(2)(ii) of this section the Review Board shall charge the average salary rate for Review Board employees (including benefits), for document search time, and the direct costs of duplication as established in the schedule of fees in paragraph (b)(6) of this section. There shall be no charge for document review time and the first 100 pages of reproduction and the first two hours of search time will be furnished without charge.

(iv) If the Review Board is asked by a requester to send Review Board records by special methods such as express mail, it may do so, provided that the requester pays for the express delivery service.

(v) The Review Board may assess charges for time spent searching, even if it fails to locate the records, or if Review Board records located are determined to be exempt from disclosure.

(vi) Whenever the Review Board estimates that fees are likely to exceed $25, it shall notify the requester of the estimated costs, unless the requester has indicated in advance a willingness to pay fees as high as those anticipated. Such a notice shall offer the requester an opportunity to confer with the Review Board personnel to reformulate the request to meet the requester's needs at a lower cost.

(3) *Limitations on Fees.* The Review Board, or its designate, may establish minimum fees below which no charges will be collected, if it determines that the costs of routine collection and processing of the fees are likely to equal or exceed the amount of the fees. If total fees determined by the Review Board for a FOIA request would be less than the appropriate threshold, the Review Board shall not charge the requesters.

(4) *Payment of fees.*

(i) Payment of fees must be by check or money order made payable to the Assassination Records Review Board.

(ii) *Advance Payments.*

(A) If the Review Board estimates or determines that allowable charges that a requester may be required to pay are likely to exceed $250, the Review Board shall notify such requester of the estimated cost and either require satisfactory assurance of full payment where the requester has a history of prompt payment of fees, or require advance payment of the charges if a requester has no payment history.

(B) If a requester has previously failed to pay a fee in a timely fashion, the Review Board shall require the requester to pay the full amount owed plus any applicable interest, and to make an advance payment of the full amount of the estimated fee before the Review Board will begin to process a new request or pending request from that requester.

(C) When the Review Board requires advance payment under this paragraph, the administrative time limits prescribed in § 1410.40(b) will begin only after the Review Board has received the fee payments.

(5) *Aggregation of Requests.* Requesters may not file multiple requests, each

seeking portions of a document or documents, solely in order to avoid payment of fees. When the Review Board reasonably believes that a requester, or a group of requesters acting in concert, is attempting to divide a request into a series of requests for the purpose of evading assessment of fees, the Review Board may aggregate any such requests and charge the requester accordingly. The Review Board shall not, however, aggregate multiple requests on unrelated subjects from a requester.

(6) *Fee Schedule.* Fees will be charged as provided below:

(i) *Duplication of Review Board records.* Review Board records will be duplicated at a rate of $.10 per page, provided the Review Board staff duplicates the records. If the Review Board determines that the duplication is so time-consuming that it must be sent to an outside duplication service, the requester will be charged the actual commercial rate.

(ii) *Duplication of large documents.* Large documents (e.g., maps, diagrams) will be duplicated at actual commercial rates.

(iii) *Review.* Review fees shall be assessed with respect to only those requesters who seek Review Board records for a commercial use, as defined in (b)(2)(i) of this section. For each hour spent by agency personnel in reviewing a requested Review Board record for possible disclosure, the fee shall be $20.15 except that where the time of managerial personnel is required, the fee shall be $47.40 for each hour of time spent by such managerial personnel.

(iv) *Search.* For each hour spent by administrative personnel in searching for and retrieving a requested Review Board record, the fee shall be $14.75. Where a search and retrieval cannot be performed entirely by clerical personnel—for example, where the identification of Review Board records within the scope of a request requires the use of professional personnel—the fee shall be $20.15 for each hour of search time spent by such professional personnel. Where the time of managerial personnel is required, the fee shall be $47.40 for each hour of time spent by such managerial personnel.

§ 1410.40 Processing of FOIA requests.

(a) Where a request complies with § 1410.25 as to specificity and statement of willingness to pay or request for fee waiver or reduction, the Designated FOIA Officer shall acknowledge receipt of the request and commence processing of the request. The Designated FOIA Officer shall prepare a written response:

(1) Granting the request;

(2) Denying the request;

(3) Granting or denying it in part;

(4) Stating that the request has been referred to another agency under § 1410.25; or

(5) Informing the requester that responsive Review Board records cannot be located or do not exist.

(b) Action pursuant to this section to provide access to requested Review Board records shall be taken within 10 working days of receipt of a request for Review Board records, as defined in § 1410.25, except that where unusual circumstances require an extension of time before a decision on a request can be reached and the person requesting Review Board records is promptly informed in writing by the Designated FOIA Officer of the reason for such extension and the date on which a determination is expected to be made, the Designated FOIA Officer may take an extension not to exceed 10 working days.

(c) For purposes of this section and § 1410.45, the term ''unusual circumstances'' may include but is not limited to the following:

(1) The need to search, collect, and appropriately examine a voluminous amount of separate and distinct Review Board records that are demanded in a single request; or

(2) The need for consultation, which shall be conducted with all practicable speed, with another agency having a substantial interest in the determination of the request or among two or more components of the agency having substantial subject-matter interest therein.

§ 1410.45 Procedure for appeal of denial of requests for Review Board records and denial of requests for fee waiver or reduction.

(a)(1) A person whose request for access to Review Board records or request for fee waiver or reduction is denied in whole or in part may appeal that determination to the Executive Director within 30 days of the determination. Appeals filed pursuant to this section must be in writing, directed to the Executive Director at the address stated above, and clearly marked ''Freedom of Information Act Appeal.'' Such an appeal received by the Review Board that is not properly addressed and marked will be so addressed and marked by Review Board personnel as soon as it is properly identified and then will be forwarded to the Executive Director. Appeals taken pursuant to this paragraph will be considered to be received upon actual receipt by the Executive Director.

(2) The Executive Director shall make a determination with respect to any appeal within 20 working days after the receipt of such appeal. If, on appeal, the denial of the request for Review Board records or fee reduction is in whole or in part upheld, the Executive Director shall notify the person making such request of the provisions for judicial review of that determination.

(b) In unusual circumstances, as defined in § 1410.40(c), the time limits prescribed for deciding an appeal pursuant to this section may be extended by up to 10 working days by the Executive Director, who will send written notice to the requester setting forth the reasons for such extension and the date on which a determination or appeal is expected to be dispatched.

§ 1410.50 Requests for classified agency records.

The Review Board may at any time be in possession of classified records received from other Federal agencies. Except with respect to those documents identified in § 1410.10(a)(2), the Review Board shall refer requests under § 1410.25 for such records or information to the other agency without making an independent determination as to the releasability of such documents. The Review Board shall refer requests for classified records in a manner consistent with Executive Order 12958 of April 17, 1995, or other such law as may apply.

PART 1415—RULES IMPLEMENTING THE PRIVACY ACT

Sec.
1415.5 Scope.
1415.10 Definitions.
1415.15 Systems of records notification.
1415.20 Requests by individuals for access to their own records.
1415.25 Processing of requests.
1415.30 Appeals from access denials.
1415.35 Requests for amendment of records.
1415.40 Appeals from amendment of denials.
1415.45 Disclosure of records to third parties.
1415.50 Fees.
1415.55 Exemptions.

AUTHORITY: 5 U.S.C. 552a; 44 U.S.C. 2107.

SOURCE: 60 FR 64123, Dec. 14, 1995, unless otherwise noted.

§ 1415.5 Scope.

This part contains the Review Board's regulations implementing the Privacy Act of 1974, 5 U.S.C. 552a.

§ 1415.10 Definitions.

In addition to the definitions provided in the Privacy Act, the following terms are defined as follows:

Assassination records, for the purpose of this regulation only, are records created by Government offices (other than the Review Board), entities, and individuals that relate to the assassination of President John F. Kennedy that may, from time to time, come into the temporary custody of the Review Board but that are not the legal property of the Review Board.

Executive Director means the principal staff official appointed by the Review Board pursuant to 44 U.S.C. 2107.8(a).

JFK Act means the President John F. Kennedy Records Collection Act of 1992.

Privacy Act Officer means the person designated by the Executive Director to administer the Review Board's activities pursuant to the regulations in this part.

Review Board means the Assassination Records Review Board created pursuant to 44 U.S.C. 2107.7.

System of records means a group of records that is within the possession and control of the Review Board and from which information is retrieved by the name of the individual or by some identifying number, symbol, or other identifying particular assigned to the individual. Assassination records, as defined above, are not included in the Review Board's systems of records.

§ 1415.15 Systems of records notification.

Any individual who wishes to know whether a system of records contains a record pertaining to him or her may file a request in person or in writing. Written requests should be directed to the Privacy Act Officer, Assassination Records Review Board, 600 E Street, NW, Washington, DC 20530, and should be clearly marked ''Privacy Act Request.''

§ 1415.20 Requests by an individual for access to their own records.

(a) *Requests in writing.* An individual may request access to his or her own records in writing by addressing a letter to the Privacy Act Officer, Assassination Records Review Board, 600 E Street, NW, 2nd Floor, Washington, DC 20530. The request should contain the following information:

(1) Full name, address, and telephone number of requester;

(2) Proof of identification, which should be a copy of one of the following: Valid driver's license, valid passport, or other current identification which contains both an address and picture of the requester;

(3) The system of records in which the desired information is contained; and

(4) At the requester's option, authorization for expenses (see § 1415.50 below).

(b) *Requests in person.* Any individual may examine his or her own record on the Review Board's premises. To do so, the individual should call the Review Board's offices at (202) 724–0088 and ask to speak to the Privacy Act Officer. This call should be made at least two weeks prior to the time the requester would like to see the records. During this call, the requester should be prepared to provide the same information as that listed in paragraph (a) of this section except for proof of identification.

§ 1415.25 Processing of requests.

(a) The Privacy Act Officer will process all requests under both the Freedom of Information Act and the Privacy Act.

(b) The Privacy Act Officer will respond to the request within ten working days of its receipt by the Privacy Act Officer. If the Review Board needs additional time to respond, the Privacy Act Officer will provide the requester an explanation as to why the Review Board requires an extension.

(c) Following the initial call from the requester, the Privacy Act Officer will determine: whether the records identified by the requester exist, and whether they are subject to any exemption under § 1415.55 below. If the records exist and are not subject to exemption, the Privacy Act Officer will call the requester and arrange an appointment at a mutually agreeable time when the records can be examined. At the appointment, the requester will be asked to present identification as stated in § 1415.20(a)(2). The requester may be accompanied by one individual of his or her own choosing, and should state during this call whether or not a second individual will be present at the appointment. In the event that a second individual accompanies the requester, the requester will be asked to provide the Review Board with written consent to disclose his or her records to the second individual.

(d) If a request is received for information compiled in reasonable anticipation of a civil action or proceeding, the Privacy Act Officer will determine whether to disclose the information and will inform the requester whether this information is subject to release under the Privacy Act (see 5 U.S.C. 552a(d)(5)).

§ 1415.30 Appeals from access denials.

When access to records has been denied in whole or in part by the Privacy Act Officer, the requester may file an appeal in writing. This appeal should be directed to the Executive Director, Assassination Records Review Board,

600 E Street, NW., 2nd Floor, Washington, DC 20530. The appeal letter must specify those denied records that are still sought and state why the denial by the Privacy Act Officer is erroneous. The Executive Director or his representative will respond to such appeals within thirty working days after the appeal letter is received in the Review Board's offices, unless, for good cause shown, the Executive Director extends such thirty day period. The appeal determination will explain the basis for continuing to deny access to any requested records and will notify the requester of his or her right to judicial review of the Executive Director's determination.

§ 1415.35 Requests for amendment of records.

(a) *Amendment requests.* Any person is entitled to request amendment of a record pertaining to him or her. This request must be made in writing and should be addressed to the Privacy Act Officer, Assassination Records Review Board, 600 E Street, NW., 2nd Floor, Washington, DC 20530. The letter should clearly identify the amendments desired. An edited copy will usually be acceptable for this purpose.

(b) *Initial response.* The Privacy Act Officer will acknowledge the request for amendment within ten working days of receipt of the request. The Privacy Act Officer will provide a letter to the requester within thirty working days stating whether or not the request for amendment has been granted or denied. The Privacy Act Officer will amend information that is not accurate, relevant, timely, or complete, unless the record is excluded or exempt. If the Privacy Act Officer decides to deny any portion of the amendment request, the reasons for the denial will be provided to the requester. In addition, the Privacy Act Officer will inform the requester of his or her right to appeal the Privacy Act Officer's determination to the Executive Director.

§ 1415.40 Appeals from amendment of denials.

(a) When amendment of records has been denied by the Privacy Act Officer, the requester may file an appeal in writing. This appeal should be directed to the Executive Director, Assassination Records Review Board, 600 E Street, NW., 2nd Floor, Washington, DC 20530. The appeal letter must specify the record subject to the appeal, and state why the denial of amendment by the Privacy Act Officer is erroneous. The Executive Director or his representative will respond to such appeals within thirty working days (subject to extension by the Executive Director for good cause) after the appeal letter has been received in the Review Board's offices.

(b) The appeal determination, if adverse to the requester in any respect, will:

(1) Explain the basis for denying amendment of the specified records;

(2) Inform the requester that he or she may file a concise statement setting forth reasons for disagreeing with the Executive Director's determination; and

(3) Inform the requester of his or her right to pursue a judicial remedy under 5 U.S.C. 552a(g)(1)(A).

§ 1415.45 Disclosure of records to third parties.

Records subject to the Privacy Act that are requested by a person other than the individual to whom they pertain will not be made available except in the following circumstances:

(a) Release is required under the Freedom of Information Act in accordance with the Review Board's FOIA regulations, 36 CFR part 1410;

(b) Pursuant to a written request by, or with the prior written consent of, the individual to whom the record pertains; or

(c) Release is authorized by 5 U.S.C. 552a(b)(1) or (3) through (11).

§ 1415.50 Fees.

A fee will not be charged for search or review of requested records, or for amendment of records. When a request is made for copies of records, a copying fee will be charged at the same rate established for FOIA requests. See 36 CFR 1410.35. However, the first 100 pages will be free of charge.

§ 1415.55 Exemptions.

(a) The systems of records entitled ''Personal Security Files'' and ''Subject File'' contain some information specifically authorized under criteria established by an Executive Order to be kept secret in the interest of national defense or foreign policy and which is properly classified pursuant to such Executive Order. Therefore, to the extent that information in these systems falls within the coverage of exemption (k)(1) of the Privacy Act, 5 U.S.C. 552a(k)(1), these systems of records are eligible for exemption from the requirements of the following subsections of the Privacy Act: subsections (c)(3), (d), (e)(1), (e)(4)(G), (H) and (I) and (f). Disclosure of information properly classified pursuant to an Executive Order would jeopardize the national defense or foreign policy of the United States.

(b) The systems of records entitled ''Agency Contacts,'' ''Investigations,'' ''Public Contacts,'' and ''Subject File'' consist, in part, of investigatory material compiled by the Review Board for law enforcement purposes other than material within the scope of subsection (j)(2) of 5 U.S.C. 552a. Provided however, that if any individual is denied any right, privilege or benefit that he would otherwise be entitled by Federal law, or for which he would otherwise be eligible, as a result of the maintenance of such material, such material shall be provided to such individual, except to the extent that the disclosure of such material would reveal the identity of a source who furnished information to the Government under an express promise that the identity of the source would be held in confidence, or prior to January 1, 1975, under an implied promise that the identity of the source would be held in confidence. Therefore, to the extent that information in these systems falls within the coverage of exemption (k)(2) of the Privacy Act, 5 U.S.C. 552a(k)(2), these systems of records are eligible for exemption from the requirements of the following subsections of the Privacy Act, for the reasons stated below.

(1) From subsection (c)(3) because release of the agency's accounting of certain disclosures to an individual who is the subject of an investigation could reveal the nature and scope of the investigation and could result in the altering or destruction of evidence, improper influencing of witnesses, and other evasive actions that could impede or compromise the investigation.

(2) From subsection (d) because release of investigative records to an individual who is the subject of an investigation could interfere with pending or prospective law enforcement proceedings, constitute an unwarranted invasion of the personal privacy of third parties, reveal the identity of confidential sources, or reveal sensitive investigative techniques and procedures.

(3) From subsections (d)(2), (3), and (4) because amendment or correction of investigative records could interfere with pending or prospective law enforcement proceedings, or could impose an impossible administrative and investigative burden by requiring the Review Board continuously to retrograde its investigations attempting to resolve questions of accuracy, relevance, timeliness, and completeness.

(4) From subsection (e)(1), because it is often impossible to determine relevance or necessity of information in the early stages of an investigation. The value of such information is a question of judgment and timing; what appears relevant and necessary when collected may ultimately be evaluated and viewed as irrelevant and unnecessary to an investigation.

(5) From subsection (e)(4)(G) and (H), because the Review Board is claiming an exemption for subsections (d) (Access to Records) and (f) (Agency Rules) of the Act, these subsections are inapplicable to the extent that these systems of records are exempted from subsections (d) and (f).

(6) From subsection (f) because procedures for notice to an individual pursuant to subsection (f)(1) as to the existence of records pertaining to the person dealing with an actual or potential investigation must be exempted because such notice to an individual would be detrimental to the successful conduct of a pending or future investigation. In addition, mere notice of an investigation could inform the subject or others that their activities either are, or may become, the subject of an

investigation and might enable the subjects to avoid detection or to destroy assassination records. Since the Review Board is claiming an exemption for subsection (d) of the Act (Access to Records) the rules require pursuant to subsection (f)(2) through (5) are inapplicable to these systems of records to the extent that these systems of records are exempted from subsection (d).

(c) The systems of records entitled ''Employment Applications'' and ''Personal Security Files'' consist in part of investigatory material compiled by the Review Board for the purpose of determining suitability, eligibility, or qualifications for Federal civilian employment or Federal contracts, the release of which would reveal the identity of a source who furnished information to the Government under an express promise that the identity of the source would be held in confidence. Therefore, to the extent that information in these systems falls within the coverage of Exemption (k)(5) of the Privacy Act, 5 U.S.C. 552a(k)(5), these systems of records are eligible for exemption from the requirements of subsection (d)(1), because release would reveal the identity of a source who furnished information to the Government under an express promise of confidentiality. Revealing the identity of a confidential source could impede future cooperation by sources, and could result in harassment or harm to such sources.

1416—1499 [Reserved]

FINDING AIDS

A list of CFR titles, subtitles, chapters, subchapters and parts and an alphabetical list of agencies publishing in the CFR are included in the CFR Index and Finding Aids volume to the Code of Federal Regulations which is published separately and revised annually.

Material Approved for Incorporation by Reference
Table of CFR Titles and Chapters
Alphabetical List of Agencies Appearing in the CFR
Redesignation Tables
List of CFR Sections Affected

Material Approved for Incorporation by Reference

(Revised as of July 1, 1997)

The Director of the Federal Register has approved under 5 U.S.C. 552(a) and 1 CFR Part 51 the incorporation by reference of the following publications. This list contains only those incorporations by reference effective as of the revision date of this volume. Incorporations by reference found within a regulation are effective upon the effective date of that regulation. For more information on incorporation by reference, see the preliminary pages of this volume.

36 CFR Chapter XI

ARCHITECTURAL AND TRANSPORTATION BARRIERS COMPLIANCE BOARD

	36 CFR
American National Standards Institute 1430 Broadway, New York, NY 10018	
ANSI A117.1—1986 Providing Accessibility and Usability for Physically Handicapped People.	1190.31; 1190.32; 1190.33; 1190.40

36 CFR Chapter XII

NATIONAL ARCHIVES AND RECORDS ADMINISTRATION

American National Standards Institute (ANSI) 1430 Broadway, New York, NY 10018	
ANSI IT2.19–1990, American National Standard for Photography—Density Measurements—Geometric Conditions for Transmission Density.	1230.3; 1230.14
ANSI/NAPM IT9.1–1992, American National Standard for Imaging Media (Film)—Silver-Gelatin Type—Specifications for Stability.	1230.3; 1230.4; 1230.12; 1230.14; 1232.30
ANSI IT9.2–1991, American National Standard for Imaging Media—Photographic Processed Films, Plates, and Papers—Filing Enclosures and Storage Containers.	1230.3; 1230.12; 1230.20; 1232.26
ANSI IT9.11–1991, American National Standard for Imaging Media—Processed Safety Photographic Film—Storage.	1230.3; 1230.20; 1232.26
ANSI PH1.43–85 Photography (Film)—Processed Safety Film—Storage	1232.4
ANSI PH1.48–82 For Photography (Film and Slides)—Black-and-White Photographic Paper Prints—Practice for Storage.	1232.4
ANSI/ASC PH1.28–84 For Photography (Film)—Archival Records, Silver-Gelatin Type, on Cellulose Ester Base.	1232.4
ANSI/ASC PH1.41–84 For Photography (Film)—Archival Records, Silver-Gelatin Type, on Polyester Base.	1232.4
ANSI/ASC PH1.53–84 For Photography (Processing)—Processed Films, Plates, and Papers—Filing Enclosures and Containers for Storage.	1232.4
ANSI/ISO 5/3–1984, ANSI PH2.18–1985, Photography (Sensitometry)—Density Measurements—Spectral Conditions.	1230.3(b)
ANSI/ISO 543–1990 (ANSI IT9.6–1991) Photography—Photographic Films—Specifications for Safety Film.	1232.30
ISO 3334–1989, Micrographics—ISO resolution test chart No. 2—Description and use.	1230.3(b)
Association for Information and Image Management (AIIM) 1100 Wayne Avenue, Suite 1100, Silver Spring, MD 20910	

36 CFR Chapter XII—Continued

NATIONAL ARCHIVES AND RECORDS ADMINISTRATION—Continued

ANSI/AIIM MS1–1988, Recommended Practice for Alphanumeric Computer-Output Microforms—Operational Practices for Inspection and Quality Control (FIPS 82).	1230.3(c)
ANSI/AIIM MS5–1991, Microfiche (FIPS 54–1)	1230.3; 1230.12
ANSI/AIIM MS14–1988, Specifications for 16mm and 35mm Roll Microfilm (FIPS 54–1).	1230.3(c)
ANSI/AIIM MS19–1987, Recommended Practice for Identification of Microforms.	1230.3(c)
ANSI/AIIM MS23–1991, Practice for Operational Procedures/Inspection and Quality Control of First-generation, Silver Microfilm of Documents.	1230.2; 1230.12; 1230.14
ANSI/AIIM MS32–1987, Microrecording of Engineering Source Documents on 35mm Microfilm.	1230.3(c); 1230.12
ANSI/AIIM MS41–1988, Unitized Microfilm Carriers (Aperture, Camera, Copy, and Image Cards).	1230.3(c)
ANSI/AIIM MS43–1988, Recommended Practice for Operational Procedures/Inspection and Quality Control for Duplicate Microfilms of Documents and From COM.	1230.3(c)
ANSI/AIIM MS45–1990, Recommended Practice for Inspection of Stored Silver-Gelatin Microforms for Evidence of Deterioration.	1230.3; 1230.22
ANSI/ISO 3334–1991, ANSI/AIIM MS51–1991, Micrographics—ISO Resolution Test Chart No. 2—Description and Use.	1230.3; 1230.14

National Fire Protection Association

Batterymarch Park, Quincy, MA 02269

NFPA 40–82 Standard for the Storage and Handling of Cellulose Nitrate Motion Picture Film.	1232.4
NFPA 40–1994 Standard for the Storage and Handling of Cellulose Nitrate Motion Picture Film.	1232.22
NFPA 232–86 Standard for the Protection of Records	1232.4
NFPA 232A–1995 Guide for Fire Protection for Archives and Records Centers.	1232.26

National Institute of Standards and Technology (formerly the National Bureau of Standards)

Office of Standard Reference Materials, Rm. B311 Chemistry, Gaithersburg, MD 20899

NBS–SRM 1010a, Microcopy Resolution Test Chart (ISO Test Chart No. 2), certified June 1, 1990.	1230.3(d)

Table of CFR Titles and Chapters

(Revised as of June 20, 1997)

Title 1—General Provisions

I Administrative Committee of the Federal Register (Parts 1—49)
II Office of the Federal Register (Parts 50—299)
IV Miscellaneous Agencies (Parts 400—500)

Title 2—[Reserved]

Title 3—The President

I Executive Office of the President (Parts 100—199)

Title 4—Accounts

I General Accounting Office (Parts 1—99)
II Federal Claims Collection Standards (General Accounting Office—Department of Justice) (Parts 100—299)

Title 5—Administrative Personnel

I Office of Personnel Management (Parts 1—1199)
II Merit Systems Protection Board (Parts 1200—1299)
III Office of Management and Budget (Parts 1300—1399)
IV Advisory Committee on Federal Pay (Parts 1400—1499)
V The International Organizations Employees Loyalty Board (Parts 1500—1599)
VI Federal Retirement Thrift Investment Board (Parts 1600—1699)
VII Advisory Commission on Intergovernmental Relations (Parts 1700—1799)
VIII Office of Special Counsel (Parts 1800—1899)
IX Appalachian Regional Commission (Parts 1900—1999)
XI Armed Forces Retirement Home (Part 2100)
XIV Federal Labor Relations Authority, General Counsel of the Federal Labor Relations Authority and Federal Service Impasses Panel (Parts 2400—2499)
XV Office of Administration, Executive Office of the President (Parts 2500—2599)
XVI Office of Government Ethics (Parts 2600—2699)
XXI Department of the Treasury (Parts 3100—3199)
XXII Federal Deposit Insurance Corporation (Part 3201)
XXIII Department of Energy (Part 3301)

Title 5—Administrative Personnel—Continued

Chap.	
XXIV	Federal Energy Regulatory Commission (Part 3401)
XXVI	Department of Defense (Part 3601)
XXVIII	Department of Justice (Part 3801)
XXIX	Federal Communications Commission (Parts 3900—3999)
XXX	Farm Credit System Insurance Corporation (Parts 4000—4099)
XXXI	Farm Credit Administration (Parts 4100—4199)
XXXIII	Overseas Private Investment Corporation (Part 4301)
XXXV	Office of Personnel Management (Part 4501)
XL	Interstate Commerce Commission (Part 5001)
XLI	Commodity Futures Trading Commission (Part 5101)
XLII	Department of Labor (Part 5201)
XLIII	National Science Foundation (Part 5301)
XLV	Department of Health and Human Services (Part 5501)
XLVI	Postal Rate Commission (Part 5601)
XLVII	Federal Trade Commission (Part 5701)
XLVIII	Nuclear Regulatory Commission (Part 5801)
L	Department of Transportation (Part 6001)
LII	Export-Import Bank of the United States (Part 6201)
LIII	Department of Education (Parts 6300—6399)
LIV	Environmental Protection Agency (Part 6401)
LVII	General Services Administration (Part 6701)
LVIII	Board of Governors of the Federal Reserve System (Part 6801)
LIX	National Aeronautics and Space Administration (Part 6901)
LX	United States Postal Service (Part 7001)
LXI	National Labor Relations Board (Part 7101)
LXII	Equal Employment Opportunity Commission (Part 7201)
LXIII	Inter-American Foundation (Part 7301)
LXV	Department of Housing and Urban Development (Part 7501)
LXVI	National Archives and Records Administration (Part 7601)
LXIX	Tennessee Valley Authority (Part 7901)
LXXI	Consumer Product Safety Commission (Part 8101)
LXXIV	Federal Mine Safety and Health Review Commission (Part 8401)
LXXVI	Federal Retirement Thrift Investment Board (Part 8601)
LXXVII	Office of Management and Budget (Part 8701)

Title 6—[Reserved]

Title 7—Agriculture

SUBTITLE A—Office of the Secretary of Agriculture (Parts 0—26)

SUBTITLE B—Regulations of the Department of Agriculture

I Agricultural Marketing Service (Standards, Inspections, Marketing Practices), Department of Agriculture (Parts 27—209)

II Food and Consumer Service, Department of Agriculture (Parts 210—299)

Title 7—Agriculture—Continued

Chap.	
III	Animal and Plant Health Inspection Service, Department of Agriculture (Parts 300—399)
IV	Federal Crop Insurance Corporation, Department of Agriculture (Parts 400—499)
V	Agricultural Research Service, Department of Agriculture (Parts 500—599)
VI	Natural Resources Conservation Service, Department of Agriculture (Parts 600—699)
VII	Farm Service Agency, Department of Agriculture (Parts 700—799)
VIII	Grain Inspection, Packers and Stockyards Administration (Federal Grain Inspection Service), Department of Agriculture (Parts 800—899)
IX	Agricultural Marketing Service (Marketing Agreements and Orders; Fruits, Vegetables, Nuts), Department of Agriculture (Parts 900—999)
X	Agricultural Marketing Service (Marketing Agreements and Orders; Milk), Department of Agriculture (Parts 1000—1199)
XI	Agricultural Marketing Service (Marketing Agreements and Orders; Miscellaneous Commodities), Department of Agriculture (Parts 1200—1299)
XIII	Northeast Dairy Compact Commission (Parts 1300—1399)
XIV	Commodity Credit Corporation, Department of Agriculture (Parts 1400—1499)
XV	Foreign Agricultural Service, Department of Agriculture (Parts 1500—1599)
XVI	Rural Telephone Bank, Department of Agriculture (Parts 1600—1699)
XVII	Rural Utilities Service, Department of Agriculture (Parts 1700—1799)
XVIII	Rural Housing Service, Rural Business-Cooperative Service, Rural Utilities Service, and Farm Service Agency, Department of Agriculture (Parts 1800—2099)
XXVI	Office of Inspector General, Department of Agriculture (Parts 2600—2699)
XXVII	Office of Information Resources Management, Department of Agriculture (Parts 2700—2799)
XXVIII	Office of Operations, Department of Agriculture (Parts 2800—2899)
XXIX	Office of Energy, Department of Agriculture (Parts 2900—2999)
XXX	Office of Finance and Management, Department of Agriculture (Parts 3000—3099)
XXXI	Office of Environmental Quality, Department of Agriculture (Parts 3100—3199)
XXXII	[Reserved]
XXXIII	Office of Transportation, Department of Agriculture (Parts 3300—3399)
XXXIV	Cooperative State Research, Education, and Extension Service, Department of Agriculture (Parts 3400—3499)
XXXV	Rural Housing Service, Department of Agriculture (Parts 3500—3599)

Title 7—Agriculture—Continued

Chap.	
XXXVI	National Agricultural Statistics Service, Department of Agriculture (Parts 3600—3699)
XXXVII	Economic Research Service, Department of Agriculture (Parts 3700—3799)
XXXVIII	World Agricultural Outlook Board, Department of Agriculture (Parts 3800—3899)
XLI	[Reserved]
XLII	Rural Business-Cooperative Service and Rural Utilities Service, Department of Agriculture (Parts 4200—4299)

Title 8—Aliens and Nationality

I	Immigration and Naturalization Service, Department of Justice (Parts 1—499)

Title 9—Animals and Animal Products

I	Animal and Plant Health Inspection Service, Department of Agriculture (Parts 1—199)
II	Grain Inspection, Packers and Stockyards Administration (Packers and Stockyards Programs), Department of Agriculture (Parts 200—299)
III	Food Safety and Inspection Service, Meat and Poultry Inspection, Department of Agriculture (Parts 300—599)

Title 10—Energy

I	Nuclear Regulatory Commission (Parts 0—199)
II	Department of Energy (Parts 200—699)
III	Department of Energy (Parts 700—999)
X	Department of Energy (General Provisions) (Parts 1000—1099)
XI	United States Enrichment Corporation (Parts 1100—1199)
XV	Office of the Federal Inspector for the Alaska Natural Gas Transportation System (Parts 1500—1599)
XVII	Defense Nuclear Facilities Safety Board (Parts 1700—1799)

Title 11—Federal Elections

I	Federal Election Commission (Parts 1—9099)

Title 12—Banks and Banking

I	Comptroller of the Currency, Department of the Treasury (Parts 1—199)
II	Federal Reserve System (Parts 200—299)
III	Federal Deposit Insurance Corporation (Parts 300—399)
IV	Export-Import Bank of the United States (Parts 400—499)
V	Office of Thrift Supervision, Department of the Treasury (Parts 500—599)
VI	Farm Credit Administration (Parts 600—699)
VII	National Credit Union Administration (Parts 700—799)

Title 12—Banks and Banking—Continued

Chap.

VIII Federal Financing Bank (Parts 800—899)

IX Federal Housing Finance Board (Parts 900—999)

XI Federal Financial Institutions Examination Council (Parts 1100—1199)

XIV Farm Credit System Insurance Corporation (Parts 1400—1499)

XV Thrift Depositor Protection Oversight Board (Parts 1500—1599)

XVII Office of Federal Housing Enterprise Oversight, Department of Housing and Urban Development (Parts 1700-1799)

XVIII Community Development Financial Institutions Fund, Department of the Treasury (Parts 1800—1899)

Title 13—Business Credit and Assistance

I Small Business Administration (Parts 1—199)

III Economic Development Administration, Department of Commerce (Parts 300—399)

Title 14—Aeronautics and Space

I Federal Aviation Administration, Department of Transportation (Parts 1—199)

II Office of the Secretary, Department of Transportation (Aviation Proceedings) (Parts 200—399)

III Commercial Space Transportation, Federal Aviation Administration, Department of Transportation (Parts 400—499)

V National Aeronautics and Space Administration (Parts 1200—1299)

Title 15—Commerce and Foreign Trade

SUBTITLE A—Office of the Secretary of Commerce (Parts 0—29)

SUBTITLE B—Regulations Relating to Commerce and Foreign Trade

I Bureau of the Census, Department of Commerce (Parts 30—199)

II National Institute of Standards and Technology, Department of Commerce (Parts 200—299)

III International Trade Administration, Department of Commerce (Parts 300—399)

IV Foreign-Trade Zones Board, Department of Commerce (Parts 400—499)

VII Bureau of Export Administration, Department of Commerce (Parts 700—799)

VIII Bureau of Economic Analysis, Department of Commerce (Parts 800—899)

IX National Oceanic and Atmospheric Administration, Department of Commerce (Parts 900—999)

XI Technology Administration, Department of Commerce (Parts 1100—1199)

XIII East-West Foreign Trade Board (Parts 1300—1399)

XIV Minority Business Development Agency (Parts 1400—1499)

Title 15—Commerce and Foreign Trade—Continued

Chap.

SUBTITLE C—Regulations Relating to Foreign Trade Agreements

XX Office of the United States Trade Representative (Parts 2000—2099)

SUBTITLE D—Regulations Relating to Telecommunications and Information

XXIII National Telecommunications and Information Administration, Department of Commerce (Parts 2300—2399)

Title 16—Commercial Practices

I Federal Trade Commission (Parts 0—999)

II Consumer Product Safety Commission (Parts 1000—1799)

Title 17—Commodity and Securities Exchanges

I Commodity Futures Trading Commission (Parts 1—199)

II Securities and Exchange Commission (Parts 200—399)

IV Department of the Treasury (Parts 400—499)

Title 18—Conservation of Power and Water Resources

I Federal Energy Regulatory Commission, Department of Energy (Parts 1—399)

III Delaware River Basin Commission (Parts 400—499)

VI Water Resources Council (Parts 700—799)

VIII Susquehanna River Basin Commission (Parts 800—899)

XIII Tennessee Valley Authority (Parts 1300—1399)

Title 19—Customs Duties

I United States Customs Service, Department of the Treasury (Parts 1—199)

II United States International Trade Commission (Parts 200—299)

III International Trade Administration, Department of Commerce (Parts 300—399)

Title 20—Employees' Benefits

I Office of Workers' Compensation Programs, Department of Labor (Parts 1—199)

II Railroad Retirement Board (Parts 200—399)

III Social Security Administration (Parts 400—499)

IV Employees' Compensation Appeals Board, Department of Labor (Parts 500—599)

V Employment and Training Administration, Department of Labor (Parts 600—699)

VI Employment Standards Administration, Department of Labor (Parts 700—799)

VII Benefits Review Board, Department of Labor (Parts 800—899)

VIII Joint Board for the Enrollment of Actuaries (Parts 900—999)

Title 20—Employees' Benefits—Continued

Chap.

IX Office of the Assistant Secretary for Veterans' Employment and Training, Department of Labor (Parts 1000—1099)

Title 21—Food and Drugs

I Food and Drug Administration, Department of Health and Human Services (Parts 1—1299)

II Drug Enforcement Administration, Department of Justice (Parts 1300—1399)

III Office of National Drug Control Policy (Parts 1400—1499)

Title 22—Foreign Relations

I Department of State (Parts 1—199)

II Agency for International Development, International Development Cooperation Agency (Parts 200—299)

III Peace Corps (Parts 300—399)

IV International Joint Commission, United States and Canada (Parts 400—499)

V United States Information Agency (Parts 500—599)

VI United States Arms Control and Disarmament Agency (Parts 600—699)

VII Overseas Private Investment Corporation, International Development Cooperation Agency (Parts 700—799)

IX Foreign Service Grievance Board Regulations (Parts 900—999)

X Inter-American Foundation (Parts 1000—1099)

XI International Boundary and Water Commission, United States and Mexico, United States Section (Parts 1100—1199)

XII United States International Development Cooperation Agency (Parts 1200—1299)

XIII Board for International Broadcasting (Parts 1300—1399)

XIV Foreign Service Labor Relations Board; Federal Labor Relations Authority; General Counsel of the Federal Labor Relations Authority; and the Foreign Service Impasse Disputes Panel (Parts 1400—1499)

XV African Development Foundation (Parts 1500—1599)

XVI Japan-United States Friendship Commission (Parts 1600—1699)

XVII United States Institute of Peace (Parts 1700—1799)

Title 23—Highways

I Federal Highway Administration, Department of Transportation (Parts 1—999)

II National Highway Traffic Safety Administration and Federal Highway Administration, Department of Transportation (Parts 1200—1299)

III National Highway Traffic Safety Administration, Department of Transportation (Parts 1300—1399)

Title 24—Housing and Urban Development

Chap.

SUBTITLE A—Office of the Secretary, Department of Housing and Urban Development (Parts 0—99)

SUBTITLE B—Regulations Relating to Housing and Urban Development

I Office of Assistant Secretary for Equal Opportunity, Department of Housing and Urban Development (Parts 100—199)

II Office of Assistant Secretary for Housing-Federal Housing Commissioner, Department of Housing and Urban Development (Parts 200—299)

III Government National Mortgage Association, Department of Housing and Urban Development (Parts 300—399)

V Office of Assistant Secretary for Community Planning and Development, Department of Housing and Urban Development (Parts 500—599)

VI Office of Assistant Secretary for Community Planning and Development, Department of Housing and Urban Development (Parts 600—699) [Reserved]

VII Office of the Secretary, Department of Housing and Urban Development (Housing Assistance Programs and Public and Indian Housing Programs) (Parts 700—799)

VIII Office of the Assistant Secretary for Housing—Federal Housing Commissioner, Department of Housing and Urban Development (Section 8 Housing Assistance Programs and Section 202 Direct Loan Program) (Parts 800—899)

IX Office of Assistant Secretary for Public and Indian Housing, Department of Housing and Urban Development (Parts 900—999)

X Office of Assistant Secretary for Housing—Federal Housing Commissioner, Department of Housing and Urban Development (Interstate Land Sales Registration Program) (Parts 1700—1799)

XII Office of Inspector General, Department of Housing and Urban Development (Parts 2000—2099)

XX Office of Assistant Secretary for Housing—Federal Housing Commissioner, Department of Housing and Urban Development (Parts 3200—3899)

XXV Neighborhood Reinvestment Corporation (Parts 4100—4199)

Title 25—Indians

I Bureau of Indian Affairs, Department of the Interior (Parts 1—299)

II Indian Arts and Crafts Board, Department of the Interior (Parts 300—399)

III National Indian Gaming Commission, Department of the Interior (Parts 500—599)

IV Office of Navajo and Hopi Indian Relocation (Parts 700—799)

V Bureau of Indian Affairs, Department of the Interior, and Indian Health Service, Department of Health and Human Services (Part 900)

VI Office of the Assistant Secretary-Indian Affairs, Department of the Interior (Part 1001)

Title 25—Indians—Continued

Chap.

VII Office of the Special Trustee for American Indians, Department of the Interior (Part 1200)

Title 26—Internal Revenue

I Internal Revenue Service, Department of the Treasury (Parts 1—799)

Title 27—Alcohol, Tobacco Products and Firearms

I Bureau of Alcohol, Tobacco and Firearms, Department of the Treasury (Parts 1—299)

Title 28—Judicial Administration

I Department of Justice (Parts 0—199)

III Federal Prison Industries, Inc., Department of Justice (Parts 300—399)

V Bureau of Prisons, Department of Justice (Parts 500—599)

VI Offices of Independent Counsel, Department of Justice (Parts 600—699)

VII Office of Independent Counsel (Parts 700—799)

Title 29—Labor

SUBTITLE A—Office of the Secretary of Labor (Parts 0—99)

SUBTITLE B—Regulations Relating to Labor

I National Labor Relations Board (Parts 100—199)

II Office of Labor-Management Standards, Department of Labor (Parts 200—299)

III National Railroad Adjustment Board (Parts 300—399)

IV Office of Labor-Management Standards, Department of Labor (Parts 400—499)

V Wage and Hour Division, Department of Labor (Parts 500—899)

IX Construction Industry Collective Bargaining Commission (Parts 900—999)

X National Mediation Board (Parts 1200—1299)

XII Federal Mediation and Conciliation Service (Parts 1400—1499)

XIV Equal Employment Opportunity Commission (Parts 1600—1699)

XVII Occupational Safety and Health Administration, Department of Labor (Parts 1900—1999)

XX Occupational Safety and Health Review Commission (Parts 2200—2499)

XXV Pension and Welfare Benefits Administration, Department of Labor (Parts 2500—2599)

XXVII Federal Mine Safety and Health Review Commission (Parts 2700—2799)

XL Pension Benefit Guaranty Corporation (Parts 4000—4999)

Title 30—Mineral Resources

Chap.

I Mine Safety and Health Administration, Department of Labor (Parts 1—199)

II Minerals Management Service, Department of the Interior (Parts 200—299)

III Board of Surface Mining and Reclamation Appeals, Department of the Interior (Parts 300—399)

IV Geological Survey, Department of the Interior (Parts 400—499)

VI Bureau of Mines, Department of the Interior (Parts 600—699)

VII Office of Surface Mining Reclamation and Enforcement, Department of the Interior (Parts 700—999)

Title 31—Money and Finance: Treasury

SUBTITLE A—Office of the Secretary of the Treasury (Parts 0—50)

SUBTITLE B—Regulations Relating to Money and Finance

I Monetary Offices, Department of the Treasury (Parts 51—199)

II Fiscal Service, Department of the Treasury (Parts 200—399)

IV Secret Service, Department of the Treasury (Parts 400—499)

V Office of Foreign Assets Control, Department of the Treasury (Parts 500—599)

VI Bureau of Engraving and Printing, Department of the Treasury (Parts 600—699)

VII Federal Law Enforcement Training Center, Department of the Treasury (Parts 700—799)

VIII Office of International Investment, Department of the Treasury (Parts 800—899)

Title 32—National Defense

SUBTITLE A—Department of Defense

I Office of the Secretary of Defense (Parts 1—399)

V Department of the Army (Parts 400—699)

VI Department of the Navy (Parts 700—799)

VII Department of the Air Force (Parts 800—1099)

SUBTITLE B—Other Regulations Relating to National Defense

XII Defense Logistics Agency (Parts 1200—1299)

XVI Selective Service System (Parts 1600—1699)

XIX Central Intelligence Agency (Parts 1900—1999)

XX Information Security Oversight Office, National Archives and Records Administration (Parts 2000—2099)

XXI National Security Council (Parts 2100—2199)

XXIV Office of Science and Technology Policy (Parts 2400—2499)

XXVII Office for Micronesian Status Negotiations (Parts 2700—2799)

XXVIII Office of the Vice President of the United States (Parts 2800—2899)

XXIX Presidential Commission on the Assignment of Women in the Armed Forces (Part 2900)

Title 33—Navigation and Navigable Waters

Chap.

I Coast Guard, Department of Transportation (Parts 1—199)

II Corps of Engineers, Department of the Army (Parts 200—399)

IV Saint Lawrence Seaway Development Corporation, Department of Transportation (Parts 400—499)

Title 34—Education

SUBTITLE A—Office of the Secretary, Department of Education (Parts 1—99)

SUBTITLE B—Regulations of the Offices of the Department of Education

I Office for Civil Rights, Department of Education (Parts 100—199)

II Office of Elementary and Secondary Education, Department of Education (Parts 200—299)

III Office of Special Education and Rehabilitative Services, Department of Education (Parts 300—399)

IV Office of Vocational and Adult Education, Department of Education (Parts 400—499)

V Office of Bilingual Education and Minority Languages Affairs, Department of Education (Parts 500—599)

VI Office of Postsecondary Education, Department of Education (Parts 600—699)

VII Office of Educational Research and Improvement, Department of Education (Parts 700—799)

XI National Institute for Literacy (Parts 1100-1199)

SUBTITLE C—Regulations Relating to Education

XII National Council on Disability (Parts 1200—1299)

Title 35—Panama Canal

I Panama Canal Regulations (Parts 1—299)

Title 36—Parks, Forests, and Public Property

I National Park Service, Department of the Interior (Parts 1—199)

II Forest Service, Department of Agriculture (Parts 200—299)

III Corps of Engineers, Department of the Army (Parts 300—399)

IV American Battle Monuments Commission (Parts 400—499)

V Smithsonian Institution (Parts 500—599)

VII Library of Congress (Parts 700—799)

VIII Advisory Council on Historic Preservation (Parts 800—899)

IX Pennsylvania Avenue Development Corporation (Parts 900—999)

XI Architectural and Transportation Barriers Compliance Board (Parts 1100—1199)

XII National Archives and Records Administration (Parts 1200—1299)

XIV Assassination Records Review Board (Parts 1400-1499)

Title 37—Patents, Trademarks, and Copyrights

Chap.

I Patent and Trademark Office, Department of Commerce (Parts 1—199)

II Copyright Office, Library of Congress (Parts 200—299)

IV Assistant Secretary for Technology Policy, Department of Commerce (Parts 400—499)

V Under Secretary for Technology, Department of Commerce (Parts 500—599)

Title 38—Pensions, Bonuses, and Veterans' Relief

I Department of Veterans Affairs (Parts 0—99)

Title 39—Postal Service

I United States Postal Service (Parts 1—999)

III Postal Rate Commission (Parts 3000—3099)

Title 40—Protection of Environment

I Environmental Protection Agency (Parts 1—799)

V Council on Environmental Quality (Parts 1500—1599)

Title 41—Public Contracts and Property Management

SUBTITLE B—Other Provisions Relating to Public Contracts

50 Public Contracts, Department of Labor (Parts 50–1—50–999)

51 Committee for Purchase From People Who Are Blind or Severely Disabled (Parts 51–1—51–99)

60 Office of Federal Contract Compliance Programs, Equal Employment Opportunity, Department of Labor (Parts 60–1—60–999)

61 Office of the Assistant Secretary for Veterans Employment and Training, Department of Labor (Parts 61–1—61–999)

SUBTITLE C—Federal Property Management Regulations System

101 Federal Property Management Regulations (Parts 101–1—101–99)

105 General Services Administration (Parts 105–1—105–999)

109 Department of Energy Property Management Regulations (Parts 109–1—109–99)

114 Department of the Interior (Parts 114–1—114–99)

115 Environmental Protection Agency (Parts 115–1—115–99)

128 Department of Justice (Parts 128–1—128–99)

SUBTITLE D—Other Provisions Relating to Property Management [Reserved]

SUBTITLE E—Federal Information Resources Management Regulations System

201 Federal Information Resources Management Regulation (Parts 201–1—201–99) [Reserved]

SUBTITLE F—Federal Travel Regulation System

301 Travel Allowances (Parts 301–1—301–99)

302 Relocation Allowances (Parts 302–1—302–99)

Title 41—Public Contracts and Property Management—Continued

Chap.

303 Payment of Expenses Connected with the Death of Certain Employees (Parts 303–1—303–2)

304 Payment from a Non-Federal Source for Travel Expenses (Parts 304–1—304–99)

Title 42—Public Health

I Public Health Service, Department of Health and Human Services (Parts 1—199)

IV Health Care Financing Administration, Department of Health and Human Services (Parts 400—499)

V Office of Inspector General-Health Care, Department of Health and Human Services (Parts 1000—1999)

Title 43—Public Lands: Interior

SUBTITLE A—Office of the Secretary of the Interior (Parts 1—199)

SUBTITLE B—Regulations Relating to Public Lands

I Bureau of Reclamation, Department of the Interior (Parts 200—499)

II Bureau of Land Management, Department of the Interior (Parts 1000—9999)

III Utah Reclamation Mitigation and Conservation Commission (Parts 10000—10005)

Title 44—Emergency Management and Assistance

I Federal Emergency Management Agency (Parts 0—399)

IV Department of Commerce and Department of Transportation (Parts 400—499)

Title 45—Public Welfare

SUBTITLE A—Department of Health and Human Services (Parts 1—199)

SUBTITLE B—Regulations Relating to Public Welfare

II Office of Family Assistance (Assistance Programs), Administration for Children and Families, Department of Health and Human Services (Parts 200—299)

III Office of Child Support Enforcement (Child Support Enforcement Program), Administration for Children and Families, Department of Health and Human Services (Parts 300—399)

IV Office of Refugee Resettlement, Administration for Children and Families Department of Health and Human Services (Parts 400—499)

V Foreign Claims Settlement Commission of the United States, Department of Justice (Parts 500—599)

VI National Science Foundation (Parts 600—699)

VII Commission on Civil Rights (Parts 700—799)

VIII Office of Personnel Management (Parts 800—899)

Title 45—Public Welfare—Continued

Chap.

X Office of Community Services, Administration for Children and Families, Department of Health and Human Services (Parts 1000—1099)

XI National Foundation on the Arts and the Humanities (Parts 1100—1199)

XII ACTION (Parts 1200—1299)

XIII Office of Human Development Services, Department of Health and Human Services (Parts 1300—1399)

XVI Legal Services Corporation (Parts 1600—1699)

XVII National Commission on Libraries and Information Science (Parts 1700—1799)

XVIII Harry S. Truman Scholarship Foundation (Parts 1800—1899)

XXI Commission on Fine Arts (Parts 2100—2199)

XXII Christopher Columbus Quincentenary Jubilee Commission (Parts 2200—2299)

XXIII Arctic Research Commission (Part 2301)

XXIV James Madison Memorial Fellowship Foundation (Parts 2400—2499)

XXV Corporation for National and Community Service (Parts 2500—2599)

Title 46—Shipping

I Coast Guard, Department of Transportation (Parts 1—199)

II Maritime Administration, Department of Transportation (Parts 200—399)

IV Federal Maritime Commission (Parts 500—599)

Title 47—Telecommunication

I Federal Communications Commission (Parts 0—199)

II Office of Science and Technology Policy and National Security Council (Parts 200—299)

III National Telecommunications and Information Administration, Department of Commerce (Parts 300—399)

Title 48—Federal Acquisition Regulations System

1 Federal Acquisition Regulation (Parts 1—99)

2 Department of Defense (Parts 200—299)

3 Department of Health and Human Services (Parts 300—399)

4 Department of Agriculture (Parts 400—499)

5 General Services Administration (Parts 500—599)

6 Department of State (Parts 600—699)

7 Agency for International Development (Parts 700—799)

8 Department of Veterans Affairs (Parts 800—899)

9 Department of Energy (Parts 900—999)

10 Department of the Treasury (Parts 1000—1099)

12 Department of Transportation (Parts 1200—1299)

Title 48—Federal Acquisition Regulations System—Continued

Chap.

13 Department of Commerce (Parts 1300—1399)

14 Department of the Interior (Parts 1400—1499)

15 Environmental Protection Agency (Parts 1500—1599)

16 Office of Personnel Management Federal Employees Health Benefits Acquisition Regulation (Parts 1600—1699)

17 Office of Personnel Management (Parts 1700—1799)

18 National Aeronautics and Space Administration (Parts 1800—1899)

19 United States Information Agency (Parts 1900—1999)

20 Nuclear Regulatory Commission (Parts 2000—2099)

21 Office of Personnel Management, Federal Employees Group Life Insurance Federal Acquisition Regulation (Parts 2100—2199)

23 Social Security Administration (Parts 2300—2399)

24 Department of Housing and Urban Development (Parts 2400—2499)

25 National Science Foundation (Parts 2500—2599)

28 Department of Justice (Parts 2800—2899)

29 Department of Labor (Parts 2900—2999)

34 Department of Education Acquisition Regulation (Parts 3400—3499)

35 Panama Canal Commission (Parts 3500—3599)

44 Federal Emergency Management Agency (Parts 4400—4499)

51 Department of the Army Acquisition Regulations (Parts 5100—5199)

52 Department of the Navy Acquisition Regulations (Parts 5200—5299)

53 Department of the Air Force Federal Acquisition Regulation Supplement (Parts 5300—5399)

54 Defense Logistics Agency, Department of Defense (Part 5452)

57 African Development Foundation (Parts 5700—5799)

61 General Services Administration Board of Contract Appeals (Parts 6100—6199)

63 Department of Transportation Board of Contract Appeals (Parts 6300—6399)

99 Cost Accounting Standards Board, Office of Federal Procurement Policy, Office of Management and Budget (Parts 9900—9999)

Title 49—Transportation

SUBTITLE A—Office of the Secretary of Transportation (Parts 1—99)

SUBTITLE B—Other Regulations Relating to Transportation

I Research and Special Programs Administration, Department of Transportation (Parts 100—199)

II Federal Railroad Administration, Department of Transportation (Parts 200—299)

III Federal Highway Administration, Department of Transportation (Parts 300—399)

Title 49—Transportation—Continued

Chap.

IV Coast Guard, Department of Transportation (Parts 400—499)

V National Highway Traffic Safety Administration, Department of Transportation (Parts 500—599)

VI Federal Transit Administration, Department of Transportation (Parts 600—699)

VII National Railroad Passenger Corporation (AMTRAK) (Parts 700—799)

VIII National Transportation Safety Board (Parts 800—999)

X Surface Transportation Board, Department of Transportation (Parts 1000—1399)

Title 50—Wildlife and Fisheries

I United States Fish and Wildlife Service, Department of the Interior (Parts 1—199)

II National Marine Fisheries Service, National Oceanic and Atmospheric Administration, Department of Commerce (Parts 200—299)

III International Fishing and Related Activities (Parts 300—399)

IV Joint Regulations (United States Fish and Wildlife Service, Department of the Interior and National Marine Fisheries Service, National Oceanic and Atmospheric Administration, Department of Commerce); Endangered Species Committee Regulations (Parts 400—499)

V Marine Mammal Commission (Parts 500—599)

VI Fishery Conservation and Management, National Oceanic and Atmospheric Administration, Department of Commerce (Parts 600—699)

CFR Index and Finding Aids

Subject/Agency Index

List of Agency Prepared Indexes

Parallel Tables of Statutory Authorities and Rules

Acts Requiring Publication in the Federal Register

List of CFR Titles, Chapters, Subchapters, and Parts

Alphabetical List of Agencies Appearing in the CFR

Alphabetical List of Agencies Appearing in the CFR

(Revised as of June 20, 1997)

Agency	CFR Title, Subtitle or Chapter
ACTION	45, XII
Administrative Committee of the Federal Register	1, I
Advanced Research Projects Agency	32, I
Advisory Commission on Intergovernmental Relations	5, VII
Advisory Committee on Federal Pay	5, IV
Advisory Council on Historic Preservation	36, VIII
African Development Foundation	22, XV
Federal Acquisition Regulation	48, 57
Agency for International Development	22, II
Federal Acquisition Regulation	48, 7
Agricultural Marketing Service	7, I, IX, X, XI
Agricultural Research Service	7, V
Agriculture Department	
Agricultural Marketing Service	7, I, IX, X, XI
Agricultural Research Service	7, V
Animal and Plant Health Inspection Service	7, III; 9, I
Commodity Credit Corporation	7, XIV
Cooperative State Research, Education, and Extension Service	7, XXXIV
Economic Research Service	7, XXXVII
Energy, Office of	7, XXIX
Environmental Quality, Office of	7, XXXI
Farm Service Agency	7, VII, XVIII
Federal Acquisition Regulation	48, 4
Federal Crop Insurance Corporation	7, IV
Finance and Management, Office of	7, XXX
Food and Consumer Service	7, II
Food Safety and Inspection Service	9, III
Foreign Agricultural Service	7, XV
Forest Service	36, II
Grain Inspection, Packers and Stockyards Administration	7, VIII; 9, II
Information Resources Management, Office of	7, XXVII
Inspector General, Office of	7, XXVI
National Agricultural Library	7, XLI
National Agricultural Statistics Service	7, XXXVI
Natural Resources Conservation Service	7, VI
Operations, Office of	7, XXVIII
Rural Business-Cooperative Service	7, XVIII, XLII
Rural Development Administration	7, XLII
Rural Housing Service	7, XVIII, XXXV
Rural Telephone Bank	7, XVI
Rural Utilities Service	7, XVII, XVIII, XLII
Secretary of Agriculture, Office of	7, Subtitle A
Transportation, Office of	7, XXXIII
World Agricultural Outlook Board	7, XXXVIII
Air Force Department	32, VII
Federal Acquisition Regulation Supplement	48, 53
Alaska Natural Gas Transportation System, Office of the Federal Inspector	10, XV
Alcohol, Tobacco and Firearms, Bureau of	27, I
AMTRAK	49, VII
American Battle Monuments Commission	36, IV
American Indians, Office of the Special Trustee	25, VII

Agency	CFR Title, Subtitle or Chapter
Animal and Plant Health Inspection Service	7, III; 9, I
Appalachian Regional Commission	5, IX
Architectural and Transportation Barriers Compliance Board	36, XI
Arctic Research Commission	45, XXIII
Armed Forces Retirement Home	5, XI
Arms Control and Disarmament Agency, United States	22, VI
Army Department	32, V
Engineers, Corps of	33, II; 36, III
Federal Acquisition Regulation	48, 51
Assassination Records Review Board	36, XIV
Benefits Review Board	20, VII
Bilingual Education and Minority Languages Affairs, Office of	34, V
Blind or Severely Disabled, Committee for Purchase From People Who Are	41, 51
Board for International Broadcasting	22, XIII
Census Bureau	15, I
Central Intelligence Agency	32, XIX
Child Support Enforcement, Office of	45, III
Children and Families, Administration for	45, II, III, IV, X
Christopher Columbus Quincentenary Jubilee Commission	45, XXII
Civil Rights, Commission on	45, VII
Civil Rights, Office for	34, I
Coast Guard	33, I; 46, I; 49, IV
Commerce Department	44, IV
Census Bureau	15, I‘
Economic Affairs, Under Secretary	37, V
Economic Analysis, Bureau of	15, VIII
Economic Development Administration	13, III
Emergency Management and Assistance	44, IV
Export Administration, Bureau of	15, VII
Federal Acquisition Regulation	48, 13
Fishery Conservation and Management	50, VI
Foreign-Trade Zones Board	15, IV
International Trade Administration	15, III; 19, III
National Institute of Standards and Technology	15, II
National Marine Fisheries Service	50, II, IV
National Oceanic and Atmospheric Administration	15, IX; 50, II, III, IV, VI
National Telecommunications and Information Administration	15, XXIII; 47, III
National Weather Service	15, IX
Patent and Trademark Office	37, I
Productivity, Technology and Innovation, Assistant Secretary for	37, IV
Secretary of Commerce, Office of	15, Subtitle A
Technology, Under Secretary for	37, V
Technology Administration	15, XI
Technology Policy, Assistant Secretary for	37, IV
Commercial Space Transportation	14, III
Commodity Credit Corporation	7, XIV
Commodity Futures Trading Commission	5, XLI; 17, I
Community Planning and Development, Office of Assistant Secretary for	24, V, VI
Community Services, Office of	45, X
Comptroller of the Currency	12, I
Construction Industry Collective Bargaining Commission	29, IX
Consumer Product Safety Commission	5, LXXI; 16, II
Cooperative State Research, Education, and Extension Service	7, XXXIV
Copyright Office	37, II
Cost Accounting Standards Board	48, 99
Council on Environmental Quality	40, V
Customs Service, United States	19, I
Defense Contract Audit Agency	32, I
Defense Department	5, XXVI; 32, Subtitle A
Advanced Research Projects Agency	32, I
Air Force Department	32, VII
Army Department	32, V; 33, II; 36, III, 48, 51

Agency	CFR Title, Subtitle or Chapter
Defense Intelligence Agency	32, I
Defense Logistics Agency	32, I, XII; 48, 54
Defense Mapping Agency	32, I
Engineers, Corps of	33, II; 36, III
Federal Acquisition Regulation	48, 2
Navy Department	32, VI; 48, 52
Secretary of Defense, Office of	32, I
Defense Contract Audit Agency	32, I
Defense Intelligence Agency	32, I
Defense Logistics Agency	32, XII; 48, 54
Defense Mapping Agency	32, I
Defense Nuclear Facilities Safety Board	10, XVII
Delaware River Basin Commission	18, III
Drug Enforcement Administration	21, II
East-West Foreign Trade Board	15, XIII
Economic Affairs, Under Secretary	37, V
Economic Analysis, Bureau of	15, VIII
Economic Development Administration	13, III
Economic Research Service	7, XXXVII
Education, Department of	5, LIII
Bilingual Education and Minority Languages Affairs, Office of	34, V
Civil Rights, Office for	34, I
Educational Research and Improvement, Office of	34, VII
Elementary and Secondary Education, Office of	34, II
Federal Acquisition Regulation	48, 34
Postsecondary Education, Office of	34, VI
Secretary of Education, Office of	34, Subtitle A
Special Education and Rehabilitative Services, Office of	34, III
Vocational and Adult Education, Office of	34, IV
Educational Research and Improvement, Office of	34, VII
Elementary and Secondary Education, Office of	34, II
Employees' Compensation Appeals Board	20, IV
Employees Loyalty Board	5, V
Employment and Training Administration	20, V
Employment Standards Administration	20, VI
Endangered Species Committee	50, IV
Energy, Department of	5, XXIII; 10, II, III, X
Federal Acquisition Regulation	48, 9
Federal Energy Regulatory Commission	5, XXIV; 18, I
Property Management Regulations	41, 109
Energy, Office of	7, XXIX
Engineers, Corps of	33, II; 36, III
Engraving and Printing, Bureau of	31, VI
Enrichment Corporation, United States	10, XI
Environmental Protection Agency	5, LIV; 40, I
Federal Acquisition Regulation	48, 15
Property Management Regulations	41, 115
Environmental Quality, Office of	7, XXXI
Equal Employment Opportunity Commission	5, LXII; 29, XIV
Equal Opportunity, Office of Assistant Secretary for	24, I
Executive Office of the President	3, I
Administration, Office of	5, XV
Environmental Quality, Council on	40, V
Management and Budget, Office of	25, III, LXXVII; 48, 99
National Drug Control Policy, Office of	21, III
National Security Council	32, XXI; 47, 2
Presidential Documents	3
Science and Technology Policy, Office of	32, XXIV; 47, II
Trade Representative, Office of the United States	15, XX
Export Administration, Bureau of	15, VII
Export-Import Bank of the United States	5, LII; 12, IV
Family Assistance, Office of	45, II
Farm Credit Administration	5, XXXI; 12, VI
Farm Credit System Insurance Corporation	5, XXX; 12, XIV
Farm Service Agency	7, VII, XVIII
Federal Acquisition Regulation	48, 1

Agency	CFR Title, Subtitle or Chapter
Federal Aviation Administration	14, I
Commercial Space Transportation	14, III
Federal Claims Collection Standards	4, II
Federal Communications Commission	5, XXIX; 47, I
Federal Contract Compliance Programs, Office of	41, 60
Federal Crop Insurance Corporation	7, IV
Federal Deposit Insurance Corporation	5, XXII; 12, III
Federal Election Commission	11, I
Federal Emergency Management Agency	44, I
Federal Acquisition Regulation	48, 44
Federal Employees Group Life Insurance Federal Acquisition Regulation	48, 21
Federal Employees Health Benefits Acquisition Regulation	48, 16
Federal Energy Regulatory Commission	5, XXIV; 18, I
Federal Financial Institutions Examination Council	12, XI
Federal Financing Bank	12, VIII
Federal Highway Administration	23, I, II; 49, III
Federal Home Loan Mortgage Corporation	1, IV
Federal Housing Enterprise Oversight Office	12, XVII
Federal Housing Finance Board	12, IX
Federal Inspector for the Alaska Natural Gas Transportation System, Office of	10, XV
Federal Labor Relations Authority, and General Counsel of the Federal Labor Relations Authority	5, XIV; 22, XIV
Federal Law Enforcement Training Center	31, VII
Federal Maritime Commission	46, IV
Federal Mediation and Conciliation Service	29, XII
Federal Mine Safety and Health Review Commission	5, LXXIV; 29, XXVII
Federal Pay, Advisory Committee on	5, IV
Federal Prison Industries, Inc.	28, III
Federal Procurement Policy Office	48, 99
Federal Property Management Regulations	41, 101
Federal Property Management Regulations System	41, Subtitle C
Federal Railroad Administration	49, II
Federal Register, Administrative Committee of	1, I
Federal Register, Office of	1, II
Federal Reserve System	12, II
Board of Governors	5, LVIII
Federal Retirement Thrift Investment Board	5, VI, LXXVI
Federal Service Impasses Panel	5, XIV
Federal Trade Commission	5, XLVII; 16, I
Federal Transit Administration	49, VI
Federal Travel Regulation System	41, Subtitle F
Finance and Management, Office of	7, XXX
Fine Arts, Commission on	45, XXI
Fiscal Service	31, II
Fish and Wildlife Service, United States	50, I, IV
Fishery Conservation and Management	50, VI
Food and Drug Administration	21, I
Food and Consumer Service	7, II
Food Safety and Inspection Service	9, III
Foreign Agricultural Service	7, XV
Foreign Assets Control, Office of	31, V
Foreign Claims Settlement Commission of the United States	45, V
Foreign Service Grievance Board	22, IX
Foreign Service Impasse Disputes Panel	22, XIV
Foreign Service Labor Relations Board	22, XIV
Foreign-Trade Zones Board	15, IV
Forest Service	36, II
General Accounting Office	4, I, II
General Services Administration	5, LVII
Contract Appeals, Board of	48, 61
Federal Acquisition Regulation	48, 5
Federal Property Management Regulations System	41, 101, 105
Federal Travel Regulation System	41, Subtitle F
Payment From a Non-Federal Source for Travel Expenses	41, 304
Payment of Expenses Connected With the Death of Certain Employees	41, 303

Agency	CFR Title, Subtitle or Chapter
Relocation Allowances	41, 302
Travel Allowances	41, 301
Geological Survey	30, IV
Government Ethics, Office of	5, XVI
Government National Mortgage Association	24, III
Grain Inspection, Packers and Stockyards Administration	7, VIII; 9, II
Great Lakes Pilotage	46, III
Harry S. Truman Scholarship Foundation	45, XVIII
Health and Human Services, Department of	5, XLV; 45, Subtitle A
Child Support Enforcement, Office of	45, III
Children and Families, Administration for	45, II, III, IV, X
Community Services, Office of	45, X
Family Assistance, Office of	45, II
Federal Acquisition Regulation	48, 3
Food and Drug Administration	21, I
Health Care Financing Administration	42, IV
Human Development Services, Office of	45, XIII
Indian Health Service	25, V
Inspector General (Health Care), Office of	42, V
Public Health Service	42, I
Refugee Resettlement, Office of	45, IV
Health Care Financing Administration	42, IV
Housing and Urban Development, Department of	5, LXV; 24, Subtitle B
Community Planning and Development, Office of Assistant Secretary for	24, V, VI
Equal Opportunity, Office of Assistant Secretary for	24, I
Federal Acquisition Regulation	48, 24
Federal Housing Enterprise Oversight, Office of	12, XVII
Government National Mortgage Association	24, III
Housing—Federal Housing Commissioner, Office of Assistant Secretary for	24, II, VIII, X, XX
Inspector General, Office of	24, XII
Public and Indian Housing, Office of Assistant Secretary for	24, IX
Secretary, Office of	24, Subtitle A, VII
Housing—Federal Housing Commissioner, Office of Assistant Secretary for	24, II, VIII, X, XX
Human Development Services, Office of	45, XIII
Immigration and Naturalization Service	8, I
Independent Counsel, Office of	28, VII
Indian Affairs, Bureau of	25, I, V
Indian Affairs, Office of the Assistant Secretary	25, VI
Indian Arts and Crafts Board	25, II
Indian Health Service	25, V
Information Agency, United States	22, V
Federal Acquisition Regulation	48, 19
Information Resources Management, Office of	7, XXVII
Information Security Oversight Office, National Archives and Records Administration	32, XX
Inspector General	
Agriculture Department	7, XXVI
Health and Human Services Department	42, V
Housing and Urban Development Department	24, XII
Institute of Peace, United States	22, XVII
Inter-American Foundation	5, LXIII; 22, X
Intergovernmental Relations, Advisory Commission on	5, VII
Interior Department	
American Indians, Office of the Special Trustee	25, VII
Endangered Species Committee	50, IV
Federal Acquisition Regulation	48, 14
Federal Property Management Regulations System	41, 114
Fish and Wildlife Service, United States	50, I, IV
Geological Survey	30, IV
Indian Affairs, Bureau of	25, I, V
Indian Affairs, Office of the Assistant Secretary	25, VI
Indian Arts and Crafts Board	25, II
Land Management, Bureau of	43, II
Minerals Management Service	30, II

Agency	CFR Title, Subtitle or Chapter
Mines, Bureau of	30, VI
National Indian Gaming Commission	25, III
National Park Service	36, I
Reclamation, Bureau of	43, I
Secretary of the Interior, Office of	43, Subtitle A
Surface Mining and Reclamation Appeals, Board of	30, III
Surface Mining Reclamation and Enforcement, Office of	30, VII
Internal Revenue Service	26, I
International Boundary and Water Commission, United States and Mexico, United States Section	22, XI
International Development, Agency for	22, II
Federal Acquisition Regulation	48, 7
International Development Cooperation Agency, United States	22, XII
International Development, Agency for	22, II; 48, 7
Overseas Private Investment Corporation	5, XXXIII; 22, VII
International Fishing and Related Activities	50, III
International Investment, Office of	31, VIII
International Joint Commission, United States and Canada	22, IV
International Organizations Employees Loyalty Board	5, V
International Trade Administration	15, III; 19, III
International Trade Commission, United States	19, II
Interstate Commerce Commission	5, XL
James Madison Memorial Fellowship Foundation	45, XXIV
Japan–United States Friendship Commission	22, XVI
Joint Board for the Enrollment of Actuaries	20, VIII
Justice Department	5, XXVIII; 28, I
Drug Enforcement Administration	21, II
Federal Acquisition Regulation	48, 28
Federal Claims Collection Standards	4, II
Federal Prison Industries, Inc.	28, III
Foreign Claims Settlement Commission of the United States	45, V
Immigration and Naturalization Service	8, I
Offices of Independent Counsel	28, VI
Prisons, Bureau of	28, V
Property Management Regulations	41, 128
Labor Department	5, XLII
Benefits Review Board	20, VII
Employees' Compensation Appeals Board	20, IV
Employment and Training Administration	20, V
Employment Standards Administration	20, VI
Federal Acquisition Regulation	48, 29
Federal Contract Compliance Programs, Office of	41, 60
Federal Procurement Regulations System	41, 50
Labor-Management Standards, Office of	29, II, IV
Mine Safety and Health Administration	30, I
Occupational Safety and Health Administration	29, XVII
Pension and Welfare Benefits Administration	29, XXV
Public Contracts	41, 50
Secretary of Labor, Office of	29, Subtitle A
Veterans' Employment and Training, Office of the Assistant Secretary for	41, 61; 20, IX
Wage and Hour Division	29, V
Workers' Compensation Programs, Office of	20, I
Labor-Management Standards, Office of	29, II, IV
Land Management, Bureau of	43, II
Legal Services Corporation	45, XVI
Library of Congress	36, VII
Copyright Office	37, II
Management and Budget, Office of	5, III, LXXVII; 48, 99
Marine Mammal Commission	50, V
Maritime Administration	46, II
Merit Systems Protection Board	5, II
Micronesian Status Negotiations, Office for	32, XXVII
Mine Safety and Health Administration	30, I
Minerals Management Service	30, II

Agency	CFR Title, Subtitle or Chapter
Mines, Bureau of	30, VI
Minority Business Development Agency	15, XIV
Miscellaneous Agencies	1, IV
Monetary Offices	31, I
National Aeronautics and Space Administration	5, LIX; 14, V
Federal Acquisition Regulation	48, 18
National Agricultural Library	7, XLI
National Agricultural Statistics Service	7, XXXVI
National Archives and Records Administration	5, LXVI; 36, XII
Information Security Oversight Office	32, XX
National Bureau of Standards	15, II
National Capital Planning Commission	1, IV
National Commission for Employment Policy	1, IV
National Commission on Libraries and Information Science	45, XVII
National and Community Service, Corporation for	45, XXV
National Council on Disability	34, XII
National Credit Union Administration	12, VII
National Drug Control Policy, Office of	21, III
National Foundation on the Arts and the Humanities	45, XI
National Highway Traffic Safety Administration	23, II, III; 49, V
National Indian Gaming Commission	25, III
National Institute for Literacy	34, XI
National Institute of Standards and Technology	15, II
National Labor Relations Board	5, LXI; 29, I
National Marine Fisheries Service	50, II, IV
National Mediation Board	29, X
National Oceanic and Atmospheric Administration	15, IX; 50, II, III, IV, VI
National Park Service	36, I
National Railroad Adjustment Board	29, III
National Railroad Passenger Corporation (AMTRAK)	49, VII
National Science Foundation	5, XLIII; 45, VI
Federal Acquisition Regulation	48, 25
National Security Council	32, XXI
National Security Council and Office of Science and Technology Policy	47, II
National Telecommunications and Information Administration	15, XXIII; 47, III
National Transportation Safety Board	49, VIII
National Weather Service	15, IX
Natural Resources Conservation Service	7, VI
Navajo and Hopi Indian Relocation, Office of	25, IV
Navy Department	32, VI
Federal Acquisition Regulation	48, 52
Neighborhood Reinvestment Corporation	24, XXV
Northeast Dairy Compact Commission	7, XIII
Nuclear Regulatory Commission	5, XLVIII; 10, I
Federal Acquisition Regulation	48, 20
Occupational Safety and Health Administration	29, XVII
Occupational Safety and Health Review Commission	29, XX
Offices of Independent Counsel	28, VI
Operations Office	7, XXVIII
Overseas Private Investment Corporation	5, XXXIII; 22, VII
Panama Canal Commission	48, 35
Panama Canal Regulations	35, I
Patent and Trademark Office	37, I
Payment From a Non-Federal Source for Travel Expenses	41, 304
Payment of Expenses Connected With the Death of Certain Employees	41, 303
Peace Corps	22, III
Pennsylvania Avenue Development Corporation	36, IX
Pension and Welfare Benefits Administration	29, XXV
Pension Benefit Guaranty Corporation	29, XL
Personnel Management, Office of	5, I, XXXV; 45, VIII
Federal Acquisition Regulation	48, 17
Federal Employees Group Life Insurance Federal Acquisition Regulation	48, 21
Federal Employees Health Benefits Acquisition Regulation	48, 16

Agency	CFR Title, Subtitle or Chapter
Postal Rate Commission	5, XLVI; 39, III
Postal Service, United States	5, LX; 39, I
Postsecondary Education, Office of	34, VI
President's Commission on White House Fellowships	1, IV
Presidential Commission on the Assignment of Women in the Armed Forces	32, XXIX
Presidential Documents	3
Prisons, Bureau of	28, V
Productivity, Technology and Innovation, Assistant Secretary	37, IV
Public Contracts, Department of Labor	41, 50
Public and Indian Housing, Office of Assistant Secretary for	24, IX
Public Health Service	42, I
Railroad Retirement Board	20, II
Reclamation, Bureau of	43, I
Refugee Resettlement, Office of	45, IV
Regional Action Planning Commissions	13, V
Relocation Allowances	41, 302
Research and Special Programs Administration	49, I
Rural Business-Cooperative Service	7, XVIII, XLII
Rural Development Administration	7, XLII
Rural Housing Service	7, XVIII, XXXV
Rural Telephone Bank	7, XVI
Rural Utilities Service	7, XVII, XVIII, XLII
Saint Lawrence Seaway Development Corporation	33, IV
Science and Technology Policy, Office of	32, XXIV
Science and Technology Policy, Office of, and National Security Council	47, II
Secret Service	31, IV
Securities and Exchange Commission	17, II
Selective Service System	32, XVI
Small Business Administration	13, I
Smithsonian Institution	36, V
Social Security Administration	20, III; 48, 23
Soldiers' and Airmen's Home, United States	5, XI
Special Counsel, Office of	5, VIII
Special Education and Rehabilitative Services, Office of	34, III
State Department	22, I
Federal Acquisition Regulation	48, 6
Surface Mining and Reclamation Appeals, Board of	30, III
Surface Mining Reclamation and Enforcement, Office of	30, VII
Surface Transportation Board	49, X
Susquehanna River Basin Commission	18, VIII
Technology Administration	15, XI
Technology Policy, Assistant Secretary for	37, IV
Technology, Under Secretary for	37, V
Tennessee Valley Authority	5, LXIX; 18, XIII
Thrift Depositor Protection Oversight Board	12, XV
Thrift Supervision Office, Department of the Treasury	12, V
Trade Representative, United States, Office of	15, XX
Transportation, Department of	5, L
Coast Guard	33, I; 46, I; 49, IV
Commercial Space Transportation	14, III
Contract Appeals, Board of	48, 63
Emergency Management and Assistance	44, IV
Federal Acquisition Regulation	48, 12
Federal Aviation Administration	14, I
Federal Highway Administration	23, I, II; 49, III
Federal Railroad Administration	49, II
Federal Transit Administration	49, VI
Maritime Administration	46, II
National Highway Traffic Safety Administration	23, II, III; 49, V
Research and Special Programs Administration	49, I
Saint Lawrence Seaway Development Corporation	33, IV
Secretary of Transportation, Office of	14, II; 49, Subtitle A
Surface Transportation Board	49, X
Transportation, Office of	7, XXXIII

Agency	CFR Title, Subtitle or Chapter
Travel Allowances	41, 301
Treasury Department	5, XXI; 17, IV
Alcohol, Tobacco and Firearms, Bureau of	27, I
Community Development Financial Institutions Fund	12, XVIII
Comptroller of the Currency	12, I
Customs Service, United States	19, I
Engraving and Printing, Bureau of	31, VI
Federal Acquisition Regulation	48, 10
Federal Law Enforcement Training Center	31, VII
Fiscal Service	31, II
Foreign Assets Control, Office of	31, V
Internal Revenue Service	26, I
International Investment, Office of	31, VIII
Monetary Offices	31, I
Secret Service	31, IV
Secretary of the Treasury, Office of	31, Subtitle A
Thrift Supervision, Office of	12, V
Truman, Harry S. Scholarship Foundation	45, XVIII
United States and Canada, International Joint Commission	22, IV
United States and Mexico, International Boundary and Water Commission, United States Section	22, XI
United States Enrichment Corporation	10, XI
Utah Reclamation Mitigation and Conservation Commission	43, III
Veterans Affairs Department	38, I
Federal Acquisition Regulation	48, 8
Veterans' Employment and Training, Office of the Assistant Secretary for	41, 61; 20, IX
Vice President of the United States, Office of	32, XXVIII
Vocational and Adult Education, Office of	34, IV
Wage and Hour Division	29, V
Water Resources Council	18, VI
Workers' Compensation Programs, Office of	20, I
World Agricultural Outlook Board	7, XXXVIII

Redesignation Table No. 1

At 55 FR 27428, July 2, 1990, a document was published restructuring part 1228 of chapter XII. For the convenience of the user, the following Derivation Table shows the relationship of the new regulations to the old regulations.

REDESIGNATION TABLE

New section	Old section
1228.1	1228.1
1228.10	1228.10
1228.12	1228.12
1228.20(a)	1228.30
1228.20(b)	1228.60
1228.22	1228.12
1228.22(a)	
1228.22(b)	1228.12(a)
1228.22(c)	
1228.22(d)	1228.12(b)
1228.22(e)	1228.12(c)
1228.22(f)	1228.12(d)
1228.24(a)	1228.20(a)
1228.24(b)	1228.20(b)
1228.24(b)(1)	1228.20(b)(1)
1228.24(b)(2)	1228.20(b)(3)
1228.24(b)(3)	1228.20(b)(4)
1228.24(b)(4)	1228.20(b)(5)
1228.24(c)	1228.20(c)
1228.26(a)	
1228.26(a)(1)	1228.20(b)
1228.26(a)(2)	1228.20(b)(6)
1228.26(b)	1228.20(d)
1228.26(c)	1228.20(e)
1228.28(a)	
1228.28(b)(1)	
1228.28(b)(2)	
1228.28(b)(3)	
1228.28 (b)(4) through (b)(7)	1228.32(b)
1228.28(b)(8)(i)	1228.32(c)
1228.28(b)(8)(ii)	1228.32(d)
1228.28(c)	1228.34(a)
1228.28(c)(1)	1228.34(b)
1228.28(c)(2)	1228.34(c)
1228.30(a)	
1228.30(b)	
1228.30(c)	1228.34(d)
1228.30(d)	1228.64
1228.30(e)	
1228.32	1228.70
1228.40	1228.22, 1228.22(a)(1) and 1228.22(a)(2)
1228.42(a)	1228.22(a)(3)
1228.42(b)	1228.22(a)(4)

REDESIGNATION TABLE—CONTINUED

New section	Old section
1228.42(c)	1228.22(a)(5)
1228.44	1228.22(b)
1228.46	1228.22(c)
1228.50	1228.22(h) and 1228.66
1228.50(a)	
1228.50(a)(1)	
1228.50(a)(2)	
1228.50(a)(3)	
1228.50(a)(4)	1228.20(a), 1228.20(h), and 1228.66
1228.50(b)	
1228.50(c)	
1228.50(c)(1)	1228.20(g)(1)
1228.50(c)(2)	1228.20(g)(2)
1228.50(c)(3)	1228.20(g)(3)
1228.50(c)(4)	
1228.50(d)	1228.20(b)(6)
1228.52	1228.68
1228.54 (a) through (f)	1228.72
1228.54(g)	
1228.56	1228.34(e)
1228.58(a)	1228.74(a)
1228.58(b)	1228.74(b)
1228.58(c)	1228.74(d)
1228.60	1228.74(c)
1228.70	
1228.72	
1228.74	
1228.76	
1228.92(a)	1228.92(a)
1228.92(b)	1228.92(b)
1228.92(b)(1)	1228.92(b)(1)
1228.92(b)(2)	1228.92(b)(2)
1228.92(d)	1228.92(d)
1228.94	1228.94
1228.100	1228.100
1228.102	1228.102
1228.104 (a) through (a)(4)	1228.104
1228.104(a)(5)	
1228.124	1228.124
1228.136	1228.136
1228.152(a)(1)(i)	1228.152(a)(1)(i)

Redesignation Table No. 2

At 56 FR 959, January 10, 1991, the following sections in part 1152 were redesignated as set forth in the table below:

REDESIGNATION TABLE

Old section	New section
1152.735–401	1152.735–402
1152.735–402	1152.735–403
1152.735–403	1152.735–404
1152.735–404	1152.735–406
1152.735–405	1152.735–407

REDESIGNATION TABLE—CONTINUED

Old section	New section
1152.735–407	1152.735–409
1152.735–408	1152.735–410
1152.735–409	1152.735–411
1152.735–410	1152.735–412
1152.735–411	1152.735–413

List of CFR Sections Affected

All changes in this volume of the Code of Federal Regulations which were made by documents published in the FEDERAL REGISTER since January 1, 1986, are enumerated in the following list. Entries indicate the nature of the changes effected. Page numbers refer to FEDERAL REGISTER pages. The user should consult the entries for chapters and parts as well as sections for revisions.

For the period before January 1, 1986, see the ''List of CFR Sections Affected, 1949–1963, 1964–1972, and 1973–1985'' published in seven separate volumes.

1986

36 CFR

51 FR Page

Chapter IV

406 Added 4577, 4579
406.103 Corrected 7543
406.150 (c) corrected 7543
406.170 (c) revised 4577

Chapter VII

701.3 Revised 22073
701.4 Amended 22073
701.5 Revised 22073
701.6 Amended 22073
701.9 Amended 22073
701.13 Revised 22073
701.14 Revised 22073
701.15 Revised 22073
701.16 (b) amended 22073
701.17 Revised 22074
701.20 Revised 22074
701.21 Revised 22074
701.23 Revised 22074
701.24 Revised 22074
701.25 Revised 22074
701.26 Revised 22074
701.27 Revised 22074
701.28 Revised 22074
701.29 Revised 22075
701.30 Revised 22075
701.31 Amended 22075
701.32 Revised 22075
Correctly designated 23537
701.33 (b) revised 22075
701.34 Revised 22075
701.35 (b) amended 22075
703.6 (a)(2) amended 22076

36 CFR—Continued

51 FR Page

Chapter VIII

800 Revised 31118
812 Added; eff. 8–22–86 ..... 22893, 22896
812.170 (c) revised; eff. 8–22–86 22893

Chapter IX

904 Revised 7014, 7022
909 Added; eff. 8–22–86 ..... 22894, 22896
909.170 (c) revised; eff. 8–22–86 22894

Chapter X

Chapter X Chapter vacated 23056
1000 Redesignated as 45 Part 2105 and nomenclature change 23056
1002 Redesignated as 45 Part 2106 and nomenclature change 23056

Chapter XI

1150.41 (f) through (i) amended 18789
1153 Revised 17734
1155.3 (b)(1) revised; (b)(4)(i) removed; (b)(4) (ii) through (iv) redesignated as (b)(4) (i) through (iii); new (b)(4)(i) revised 36804

Chapter XII

1228.22 (b) list amended 23538
1228.74 (b) revised 23538
1228.92 (e) revised 23538
1228.104 (b) revised 23538
1228.162 (a) revised 23538
1236.8 (a) amended 23538
1239 Removed 23538
1250.34 Revised 23416

36 CFR—Continued

51 FR Page

Chapter XII —Continued

1250.38 Revised 23416
1250.44 Revised 23416
1250.58 (b) revised 23416
1254.20 (a) revised 17187
1254.26 Added 17187
1254.27 Added 31617
1254.42 Redesignated as 1254.44 and (c) amended; new 1254.42 redesignated from 1254.44 22076
1254.44 Redesignated from 1254.42 and (c) amended 22076
1254.48 Removed; new 1254.48 redesignated from 1254.56 22076
1254.50 Removed; new 1254.50 redesignated from 1254.58 22076
1254.52 Removed 22076
1254.54 Removed 22076
1254.56 Redesignated as 1254.48 22076
1254.58 Redesignated as 1254.50 22076
1254.71 Added 17187
1258.12 (c)(1) revised 17188
1260.1 Revised 22076
1260.2 Removed 22076
1260.10 Revised 22076
1260.12 Introductory text revised 22077
1260.20—1260.22 (Subpart B) Removed 22077
1275 Added 7230
1275.44 (b) corrected 8671
1275.54 Heading corrected 8671

1987

36 CFR

52 FR Page

Chapter VII

701.34 Revised 34383
702.3 Revised 672
702.4 Redesignated as 702.5 and revised; new 702.4 added 672
702.5 Redesignated as 702.6; new 702.5 redesignated from 702.4 and revised 672
702.6 Redesignated as 702.7; new 702.6 redesignated from 702.5 672
Revised 673
702.7 Redesignated as 702.8; new 702.7 redesignated from 702.6 672
Revised 673

36 CFR—Continued

52 FR Page

Chapter VII —Continued

702.8 Redesignated as 702.9; new 702.8 redesignated from 702.7 672
Revised 673
702.9 Redesignated as 702.10; new 702.9 redesignated from 702.8 672
702.10 Redesignated as 702.11; new 702.10 redesignated from 702.9 672
702.11 Redesignated as 702.12; new 702.11 redesignated from 702.10 672
702.12 Redesignated as 702.13; new 702.12 redesignated from 702.11 672
702.13 Redesignated as 702.14; new 702.13 redesignated from 702.12 672
702.14 Redesignated as 702.15; new 702.14 redesignated from 702.13 672
Revised 673
702.15 Redesignated from 702.14 672
Revised 673

Chapter VIII

800.6 (a)(2) and (c)(2) corrected 25376
800.10 Introductory text designation (a) correctly removed 25376
800.12 (a) corrected 25376

Chapter IX

902 Authority citation revised 26677
902.80 (b) revised 26677
902.81 Revised 26677
902.82 Revised 26677
902.83 Revised 26679
903 Authority citation revised 34384
903.11 Redesignated as 903.12; new 903.11 added; interim 34384
Confirmed 39224
903.12 Redesignated as 903.13; new 903.12 redesignated from 903.11; interim 34384
Confirmed 39224
903.13 Redesignated from 903.12; interim 34384
Confirmed 39224
904 Authority citation revised 48021
Revised; eff. 4–2–89 48022

36 CFR—Continued

52 FR Page

Chapter IX —Continued

904.1 Heading revised; (a) and (b) redesignated as (a) (1) and (2); introductory text designated as new (a) introductory text; new (a) heading and (b) added 48021

Chapter XI

1120.2 (h) through (o) added; interim 43195

1120.25 Amended; interim 43195

1120.51 (a) revised; (b) and (c) redesignated as (e) and (f); new (e) (1), (3) and (4) removed; new (e) (2) and (5) through (8) redesignated as (e) (3) through (7); new (b), (c), (d), (e) (1) and (2) and (g) added; new (f) amended; interim 43195

1120.53 (b) and (c) redesignated as (c) and (e); new (c) revised; new (e) amended; new (b) and (d) added; interim 43196

1154 Added; eff. 7–6–87 16380

1155 Revised 47718

Chapter XII

1220.14 Amended 34134

1228 Authority citation revised 34134

1228.32 Revised 34134

1228.34 Revised 34134

1228.36 Removed 34134

1228.190 Revised 34134

1228.192 Removed 34135

1232.4 Revised 948

1250.12 Revised 29519

1250.30 Revised 29519

1250.38 Removed 29519

1250.40 Removed 29519

1250.42 Removed 29519

1250.44 Removed 29519

1250.46 Removed 29519

1250.37—1250.46 (Subpart D) Added 29519

1250.50—1250.60 (Subpart D) Redesignated as Subpart E 29519

1250.50—1250.60 (Subpart E) Redesignated from Subpart D 29519

1250.70 (Subpart E) Redesignated as Subpart F 29519

1250.70 (Subpart F) Redesignated from Subpart E 29519

1250.80 (Subpart F) Redesignated as Subpart G 29519

36 CFR—Continued

52 FR Page

Chapter XII —Continued

1250.80 (Subpart G) Redesignated from Subpart F 29519

1250.50 (a) amended 29521

1250.58 (c) revised 29521

1250.70 (a)(7) revised 29521

1253.1 Revised 23821

1253.3 (b) through (g) revised; (h) and (i) added 23821

1253.4 Amended 23821

1253.6 Revised 23821

1254.70 Revised 20080

1254.90—1254.102 (Subpart F) Added 20081

1254.92 (a) and (c)(5)(i) corrected 22415

1254.96 (a)(1) corrected 22415

1254.98 (d) corrected 22415

1258.2 (c)(7) added 29521

1258.12 (c)(3) amended 29521

1280.1—1280.8 (Subpart A) Heading added 23821

1280.1 Revised and transferred to new Subpart A 23822

1280.3—1280.8 Added 23822

1280.10—1280.24 (Subpart A) Redesignated as (Subpart B) 23822

1280.12 Revised 23822

1280.14 Introductory text, (a), and (b) revised 23822

1280.20 (f) revised 23823

1280.22 Added 23823

1280.24 Added 23823

1280.40—1280.48 (Subpart B) Redesignated as (Subpart C) 23822

1280.42 (a) revised 23823

1280.44 Revised 23823

1280.60—1280.62 (Subpart C) Redesignated as (Subpart D) and heading revised 23822

1280.60 Revised 23823

1988

36 CFR

53 FR Page

Chapter IV

404 Revised 120

Chapter IX

902 Authority citation revised 10374

902.03 Amended 10374

902.54 (a)(1) revised; (c) added 10374

36 CFR—Continued

53 FR Page

Chapter XI

1150 Authority citation revised 39473
1150.4 Revised 39473
1150.12 Revised 39473
1150.41 Revised 39474
1150.51 Revised 39474
1150.52 Redesignated from 1150.53 39474
1150.53 Redesignated as 1150.52; new 1150.53 redesignated from 1150.54 39474
1150.54 Redesignated as 1150.53 39474
1153 Revised 19777
1154.160 (d) removed; (e) redesignated as (d) 24265
1155 Revised 19780
1190.34 Added 35510

Chapter XII

1202.50 Revised 12150
1202.54 Revised 12150
1207 Added; eff. 10–1–88 ..... 8072, 8087
1208 Added 25884, 25885
1208.170 (c) revised 25884
1209 Added; eff. 10–1–88 ..... 19193, 19204
Nomenclature change; eff. 10–1–88 19194
1209.105 (w) added; eff. 10–1–88 19194
1228.154 Revised 13408
1228.162 (a) and (b) revised 13409
1254.71 Heading, (a), (c), (d), (e) and (f) revised 1349
1256.4 Added 6821
1258.2 (a) revised; (c)(10) added 12151
(a) revised 23760
1258.11 Added 12151
1258.12 Revised 12151
(e) through (i) correctly designated as (d) through (h) 16257
(a) revised; (b)(3) amended 23760
1258.16 Revised 12151
1270 Added 50404

1989

36 CFR

54 FR Page

Chapter IX

904 Regulations at 52 FR 48021 confirmed; see regulation codified at 49 CFR 24 8912

36 CFR—Continued

54 FR Page

Chapter XI

1153.2 (a)(10) removed; (a)(11) redesignated as (a)(10) and revised 32338
1153.4 (d)(1)(ii) removed; (d)(1)(iii) through (vi) redesignated as (d)(1) (ii) through (v); introductory text, (d)(1) introductory text and (1), and (i) revised 32338
1153.6 (a)(2) removed; (a)(3) redesignated as (a)(2) 32338
1155.1 (d)(11) revised 32338
1155.2 Introductory text, (a)(3), and (h) revised; (j) removed; (k) redesignated as (j); new (j)(1) revised 32338
1155.3 (a)(2) revised; (a)(4) added 32338
1190 Authority citation revised 5443
1190.2 (e) removed 5444
1190.3 Amended 5444
1190.7 Removed; new 1190.7 redesignated from 1190.9 5444
1190.8 Removed 5444
1190.9 Redesignated as 1190.7 5444
1190.30—1190.34 (Subpart C) Redesignated as 1190.30—1190.34 (Subpart B) 5444
1190.31 Introductory text, (a), (k), (o), and (p) revised; (b) introductory text and (1) table, (c), (d), (e), (f) introductory text and (2), (g), (h), (i), (l), (m), (n), (o), (r), (s), (1) table, and (t) amended; (j), (u), and (v) added 5444
(g) and (t) corrected 34977
1190.32 (a), (b) and (c) amended; (f) removed 5446
1190.33 (a)(4) removed; (a)(2) and (3) redesignated as (a)(3) and (4); (a)(1), (2), and new (3), (c)(1), (2), and (3) amended; (c)(6)(i) through (vi) revised; new (a)(2) and (c)(6)(vii) added 5446
1190.40—1190.50 (Subpart C) Redesignated from 1190.40—1190.240 (Subpart D) and revised 5447
1190.40—1190.240 (Subpart D) Redesignated as 1190.40—1190.50 (Subpart C) and revised 5447

36 CFR—Continued

54 FR Page

Chapter XI —Continued
1190 (Subpart E) Redesignated as (Subpart D) and section added 5448
1190.60 Added 5448

Chapter XII
1202 Nomenclature change 32067
1202.4 Amended 32067
1202.46 (d) redesignated as (e); new (d) added 32067
1202.48 (a) revised 32067
1202.66 (a) revised 32068
1202.68 Revised 32068
1202.70 (a) revised 32068
1209 Heading and authority citation revised 4961
Technical correction 6363
1209.305 (c) (3) and (4) amended; (c)(5) added; interim 4950, 4961
1209.320 (a) revised; interim 4950, 4961
1209.600—1209.630 (Subpart F) Added; interim 4950, 4961
1209 Appendix C added; interim 4950, 4961
1228 Authority citation revised 2111
1228.152 (f) revised 3778
1228.180 Revised 2111
1250 Authority citation revised 32068
1250.58 (b) and (c) amended; (a) revised 32068
1250.60 Amended 32068
1250.75 (Subpart G) Added 32068
1250.80 (Subpart G) Redesignated as 1250.80 (Subpart H) 32068
1250.80 (Subpart H) Redesignated from 1250.80 (Subpart G) 32068
1254 Authority citation revised 32069
1254.30 Revised 32069
1254.38 Added 32069
1254.39 Added 32070
1254.44 (a) amended 32070

1990

36 CFR

55 FR Page

Chapter III
327 Authority citation revised 30697
327.30 Revised 30697

Chapter VII
704 Added 32566
704.20 Added 32570

36 CFR—Continued

55 FR Page

Chapter VII —Continued
704.21 Added 52845
704.30 (Subpart B) Added 32571

Chapter XI
1120.2 Regulation at 52 FR 43195 confirmed; (h) through (o) revised 2519
1120.23 Amended 2520
1120.51 Regulation at 52 FR 43195 confirmed; revised 2520
1120.53 Regulation at 52 FR 43195 confirmed; (b) through (e) revised 2521
1155.2 (h) revised; (k) added 12639

Chapter XII
1206.1—1206.6 Designated as Subpart A 21542
1206.2 (b) and (c) revised; (d) through (g) added 21542
1206.4 Revised 21542
1206.6 Revised 21542
1206.10—1206.22 (Subpart A) Redesignated as 1206.10—1206.20 (Subpart B) and revised 21542
1206.10—1206.20 (Subpart B) Redesignated from 1206.10—1206.22 (Subpart A) and revised 21542
1206.30—1206.38 (Subpart B) Redesignated as 1206.30—1206.34 (Subpart C) and revised 21543
1206.30—1206.38 (Subpart C) Redesignated from 1206.30—1206.38 (Subpart B) and revised 21543
1206.50—1206.94 (Subpart C) Redesignated as 1206.50—1206.94 (Subpart D) and revised 21544
1206.50—1206.94 (Subpart D) Redesignated form 1206.50—1206.94 (Subpart C) and revised 21544
1209.305 Regulation at 54 FR 4950, 4960 confirmed 21699
1209.320 Regulation at 54 FR 4950, 4960 confirmed 21699
1209.600—1209.635 (Subpart F) Revised; eff. in part 7–24–90 ... 21688, 21700
1209 Appendix C Revised; eff. in part 7–24–90 ..... 21690, 21700
1220 Authority citation revised 27427
1220.14 Amended 27423, 27427
1222 Revised 27423
1222.12 (b)(5) corrected 31982
1222.36 (b) corrected 28136

36 CFR—Continued

55 FR Page

Chapter XII —Continued
(a)(3) corrected 31982
1224 Removed 27426
1228.1 Revised 27428
1228.10—1228.12 (Subpart A) Revised 27428
1228.20—1228.32 (Subpart B) Revised 27429
1228.26 (a)(2) corrected 28136
1228.28 (c) corrected 31982
1228.40—1228.46 (Subpart C) Revised 27430
1228.50—1228.60 (Subpart D) Revised 27431
1228.70—1228.76 (Subpart E) Added 27433
1228.90—1228.94 (Subpart E) Redesignated as 1228.90—1228.94 (Subpart F) 27433
1228.90—1228.94 (Subpart F) Redesignated from 1228.90—1228.94 (Subpart E) 27433
1228.92 (a), (b), and (d) revised 27433
1228.94 Revised 27433
1228.100—1228.106 (Subpart F) Redesignated as 1228.100—1228.106 (Subpart G) 27433
1228.100—1228.106 (Subpart G) Redesignated from 1228.100—1228.106 (Subpart F) and heading revised 27433
1228.100 Revised 27433
1228.102 Revised 27434
1228.104 (a) introductory text, (3), and (4) revised; (a)(5) added 27434
1228.120—1228.136 (Subpart G) Redesignated as 1228.120—1228.136 (Subpart H) 27433
1228.120—1228.136 (Subpart H) Redesignated from 1228.120—1228.136 (Subpart G) 27433
1228.124 (d) amended; (e) revised; (f) removed 27434
1228.136 Revised 27434
1228.150—1228.164 (Subpart H) Redesignated as 1228.150—1228.164 (Subpart I) 27433
1228.150—1228.164 (Subpart I) Redesignated from 1228.150—1228.164 (Subpart H) 27433
1228.152 (a)(1)(i) revised 27434
1228.164 (b) and (c) revised 27434

36 CFR—Continued

55 FR Page

Chapter XII —Continued
1228.180—1228.200 (Subpart I) Redesignated as 1228.180—1228.200 (Subpart J) 27433
1228.180—1228.200 (Subpart J) Redesignated from 1228.180—1228.200 (Subpart I) 27433
1228.220—1228.224 (Subpart J) Redesignated as 1228.220—1228.224 (Subpart K) 27433
1228.220—1228.224 (Subpart K) Redesignated from 1228.220—1228.224 (Subpart J) 27433
1230.1—1230.4 Designated as Subpart A and revised 27435
1230.3 Added 27436
1230.10—1230.14 (Subpart A) Redesignated as 1230.10—1230.16 (Subpart B) 27435
1230.10—1230.16 (Subpart B) Redesignated from 1230.10—1230.14 (Subpart A) 27435
Revised 27436
1230.20—1230.26 (Subpart B) Redesignated as 1230.20—1230.26 (Subpart C) 27435
1230.20—1230.26 (Subpart C) Redesignated from 1230.20—1230.26 (Subpart B) 27435, 27438
Revised 27438
1230.50—1230.52 (Subpart C) Redesignated as 1230.50—1230.52 (Subpart D) 27435
1230.50—1230.52 (Subpart D) Redesignated from 1230.50—1230.52 (Subpart C) 27435
1234 Revised 19218
1234.20—1234.32 (Subpart C) Subpart heading corrected 23730
1280.12 Redesignated as 1280.16; new 1280.12 added 29577
Correctly designated as 1280.16 33904
1280.14 Redesignated as 1280.18; new 1280.14 added 29577
Correctly designated as 1280.18 33904
1280.16 Redesignated as 1280.12; new 1280.16 redesignated from 1280.20 29577
Revised 29578
Correctly designated as 1280.20 33904
Correctly designated from 1280.12 33904

36 CFR—Continued

55 FR Page

Chapter XII —Continued

1280.18 Redesignated as 1280.22; new 1280.18 redesignated from 1280.14 29577
(b) revised 29578
Correctly designated from 1280.14 33904
Correctly designated as 1280.22 33904
1280.20 Redesignated as 1280.24; new 1280.20 redesignated from 1280.16 29577
Correctly designated as 1280.24 33904
Correctly designated from 1280.16 33904
1280.22 Redesignated as 1280.26; new 1280.22 redesignated from 1280.18 29577
Correctly designated as 1280.26 33904
Correctly designated from 1280.18 33904
1280.24 Redesignated as 1280.28 29577
Correctly designated as 1280.28 33904
Correctly designated from 1280.20 33904
1280.26 Redesignated from 1280.22 29577
Correctly designated from 1280.22 33904
1280.28 Redesignated from 1280.24 29577
Correctly designated from 1280.24 33904
1284 Added 25307

1991

36 CFR

56 FR Page

Chapter III

327.30 (k) amended; eff. 10–1–91 29587
Regulation at 56 FR 29587 effective date stayed 49706
327.31 Added; eff. 10–1–91 29587
Regulation at 56 FR 29587 effective date stayed 49706
Revised 61163
Corrected 65190

Chapter VII

704.22 Added 49414

36 CFR—Continued

56 FR Page

Chapter XI

1152 Authority citation revised 958
1152.735–102 (b) through (f) revised; (g) added 958
1152.735–103 Revised 958
1152.735–104 Removed; new 1152.735–104 redesignated from 1152.735–105; (a) designation, (b) and concluding text removed 958
1152.735–105 Redesignated as 1152.735–104 958
1152.735–203 (c) amended 958
1152.735–204 Revised 958
1152.735–209 Added 959
1152.735–210 (c) revised; introductory text republished 959
1152.735–401 Redesignated as 1152.735–402; new 1152.735–401 added 959
1152.735–402 Redesignated as 1152.735–403; new 1152.735–402 redesignated from 1152.735–401 and revised 959
1152.735–403 Redesignated as 1152.735–404; new 1152.735–403 redesignated from 1152.735–402 959
1152.735–404 Redesignated as 1152.735–406; new 1152.735–404 redesignated from 1152.735–403 and revised 959
1152.735–405 Redesignated as 1152.735–407 959
Added 960
1152.735–406 Redesignated from 1152.735–404 959
Revised 960
1152.735–407 Redesignated as 1152.735–409; new 1152.735–407 redesignated from 1152.735–405 959
(a) revised 960
1152.735–408 Redesignated as 1152.735–410 959
Added 960
1152.735–409 Redesignated as 1152.735–411; new 1152.735–409 redesignated from 1152.735–407 959
1152.735–410 Redesignated as 1152.735–412; new 1152.735–410 redesignated from 1152.735–408 959

36 CFR—Continued

56 FR Page

Chapter XI —Continued

1152.735–411 Redesignated as 1152.735–413; new 1152.735–411 redesignated from 1152.735–409 959
Revised 960
1152.735–412 Redesignated from 1152.735–410 959
1152.735–413 Redesignated from 1152.735–411 959
Revised 960
1152 Appendix A removed 960
1155.1 (c) revised 2851
1191 Added 35453
Authority citation revised 45518
1191.1 Corrected 38174
Revised 45518
1191 Appendix amended 45518, 45520, 45526
1192 Added 45558

Chapter XII

1222.36 (a)(3) corrected; CFR correction 3978
1222.42 Revised 26336
1228.152 (e) revised 14026
(e)(4) corrected 15134
(e)(2) introductory text correctly revised 23648
1253.4 Revised 2134
1253.6 Introductory text and (d) removed; (e) through (m) redesignated as (d) through (l); heading, (c) and new (e) revised 2134
1253.7 Added 2134
1254 Authority citation revised 58312
1254.2 (a) revised 2135
1254.4 (d) through (f) redesignated as (e) through (g); new (d) added 2135
1254.12 Revised 2135
1254.20 (c) added 2135
1254.26 (a) through (f) redesignated as (b) through (g); new (a) added; new (b) revised 2135
(b) and (e) introductory text revised 58312
1254.38 (e) revised 2136
1254.71 Revised 2136
(b)(1), (c)(1) and (2) corrected 5731
1258.2 (c)(1) through (6) revised 3776
1258.10 (a) revised 3777
1258.11 Revised 3777

36 CFR—Continued

56 FR Page

Chapter XII —Continued

1258.12 Revised 3777
(b)(1) correctly revised 5652
1258.16 Revised 3777
1280.2 Added 2137

1992

36 CFR

57 FR Page

Chapter III

327.30 Appendix C amended 21895, 29220

Chapter XI

1191 Appendix corrected 1393, 1396

Chapter XII

1202.32 Revised 22430
1202.100 Revised 22430
1220.2 Revised 19807
1220.14 Amended 19807
1220.34 Revised 19807
1220.36 Revised 19807
1228.30 (b)(3) revised 22432
1228.74 Revised 22432
1228.76 Revised 22432
Corrected 24308
1228.78 Added 22432
1228.150 Amended 21742
1228.180 (a)(2) and (c) revised 22432
1228.182 (a)(2)(ii) revised; (b)(2) and (3)(ii) amended 22432
1228.183 Added 22433
1228.184 Introductory text, (a) introductory text, (b) introductory text, (1), (c) introductory text and (e)(1) revised 22433
1228.186 Introductory text revised 22433
1228.188 Revised 22433
1228.190 (b)(2) amended 22432
(b)(1) revised 22434
1228.192 Added 22434
1228.194 Revised 22434
1228.198 (a) and (b)(4) revised 22434
1238.2 Revised 19807
1250 Authority citation revised 22430
1250.34 Amended 22430
1250.58 (a) and (c) revised 22430
1253.2 Amended 21742
1253.3 (b), (c), (e), (g) and (h) revised; (j) added 21742
1253.5 (a) revised 21742
1253.6 (c), (d), (h), (i) and (k) revised 21742
1253.7 (b) and (j) revised 21742

36 CFR—Continued

57 FR Page

Chapter XII —Continued
1254.26 (e) introductory text amended; (h) added 46306
1254.38 (f)(1) and (4) revised 22431
1258.2 (c)(3), (6)(ii) and (8) revised 21743
1258.4 Introductory text and (f) revised; (g) through (i) removed 21743
1258.12 (g) revised 21743
1258.12 (g) and (h) redesignated as (h) and (i); new (g) added; interim 46306
Confirmed 60997
1258.14 Revised 21743
1260.1 Revised 21744
1260.12 (a), (c) introductory text, (2) and (d) revised; (e) added 21744
1260.46 (b) and (c) revised 21744

1993

36 CFR

58 FR Page

Chapter VII
704 Authority citation revised 30708
704.10 Revised; eff. 7–12–93 30708
704.11 Revised; eff. 7–12–93 30709

Chapter XI
1191 Authority citation revised 38211
Appendix redesignated as appendix A and amended 38211

Chapter XII
1222.20 (b)(1) revised 49194
1230.1 Revised 49194
1230.3 Revised 49194
1230.4 Amended 49195
1230.7 (Subpart B) Added 49195
1230.10—1230.16 (Subpart B) Redesignated as Subpart C 49195
1230.12 (d)(1)(i) and (2) revised 49195
1230.14 (a) and (b) revised; (c), (d)(1)(i) and (2) amended 49195
1230.16 Revised 49196
1230.20—1230.26 (Subpart C) Redesignated as Subpart D 49195
1230.20 Revised 49196
1230.22 (a)(6) removed; (a)(7) and (8) redesignated as (a)(6) and (7); (a)(1), (4)(i), (5) and new (a)(7) revised 49196
1230.24 (a) revised 49196

36 CFR—Continued

58 FR Page

Chapter XII —Continued
1230.26 (a) revised 49196
1230.50—1230.52 (Subpart D) Redesignated as Subpart E 49195
1232.6 Nomenclature change 28506

1994

36 CFR

59 FR Page

Chapter VII
701 Authority citation revised 55811
701.35 Revised 55812
704 Authority citation revised 35034
704.23 Added 35034
704.24 Added 35035
704.30 (Subpart B) Removed 35035
705 Added 38367

Chapter XI
1191 Authority citation revised 31744
Technical correction 32751
1191.2 Added 17446
1191 appendix A amended; interim; eff. 12–20–94 31745

Chapter XII
1220.14 Amended; eff. 7–5–94 28783
1220.42 Added; eff. 7–5–94 28783
1220.50—1220.60 (Subpart C) Revised; eff. 7–5–94 28783
1252.1 Revised; eff. 7–6–94 29191
1252.2 Amended; eff. 7–6–94 29191
1253.1 Revised 6901
1253.2 Revised; interim 6900
Regulation at 59 FR 6900 confirmed 23638
1254.1 (a) and (d) amended; (b) and (e) revised; eff. 7–6–94 29192
1254.2 Heading and (b) revised; (a), (c) and (d) amended; eff. 7–6–94 29192
1254.4 (a), (b) and (d) amended; (c) revised; eff. 7–6–94 29192
1254.8 (c) amended; eff. 7–6–94 29192
1254.10 Revised; eff. 7–6–94 29192
1254.12 Revised; eff. 7–6–94 29192
1254.14 Revised; eff. 7–6–94 29193
1254.16 Revised; eff. 7–6–94 29193
1254.17 Redesignated from 1254.22 and revised; eff. 7–6–94 29193
1254.18 Amended; eff. 7–6–94 29192
1254.20 (b) amended; eff. 7–6–94 29192
(a) revised; eff. 7–6–94 29193

36 CFR—Continued

59 FR Page

Chapter XII —Continued

1254.22 Redesignated as 1254.17; eff. 7–6–94 29193
1254.26 (e)(2) amended; eff. 7–6–94 29192
Heading, (a), (b), (d), (f) and (h)(1) revised; eff. 7–6–94 29193
1254.27 (c)(2), (f)(2), (4) and (5) amended; eff. 7–6–94 29192
Heading, (b), (f) introductory text, (3) and (6) revised; (a), (c)(2) and (3) amended; eff. 7–6–94 29194
1254.35 Added; eff. 7–6–94 29194
1254.36 Revised; eff. 7–6–94 29194
1254.40 Revised; eff. 7–6–94 29194
1254.42 Redesignated as 1260.2; eff. 7–6–94 ..... 29194, 29196
1254.48 (a) and (c) revised; eff. 7–6–94 29194
1254.50 Revised; eff. 7–6–94 29194
1254.70 (a) amended; eff. 7–6–94 29192
(b) revised; eff. 7–6–94 29194
1254.71 (c)(1), (2), (3), (d) introductory text, (2), (4) and (5) amended; eff. 7–6–94 29192
(a), (b)(1), (2)(i), (d)(3), (6), (f) and (g)(1) revised; eff. 7–6–94 29194
1254.72 Revised; eff. 7–6–94 29195
1254.74 Revised; eff. 7–6–94 29195
1254.76 Revised; eff. 7–6–94 29195
1254.90 (a) revised; eff. 7–6–94 29195
1254.92 (c)(5) introductory text, (i), (ii) and (6) redesignated as (d) introductory text, (1), (2) and (e); heading, (a) and new (d)(2) revised; eff. 7–6–94 29195
(c)(1) introductory text amended; eff. 7–6–94 29192
1254.94 (b), (f) introductory text, (3), (g) introductory text through (6), (h) and (i) amended; eff. 7–6–94 29192
1254.96 (a) introductory text through (3), (5) and (b) amended; eff. 7–6–94 29192
(a) introductory text amended; eff. 7–6–94 29195
1254.98 (a), (c), and (d) amended; eff. 7–6–94 29192
1254.100 (b), (c) and (d) amended; eff. 7–6–94 29192
1254.102 (d) amended; eff. 7–6–94 29192

36 CFR—Continued

59 FR Page

Chapter XII —Continued

1260.2 Redesignated from 1254.42; eff. 7–6–94 ..... 29194, 29196

1995

36 CFR

60 FR Page

Chapter VII

701.5 Existing text designated as (b); new (a) added 34853
701.6 Existing text designated as (a); new (a) amended; (b), (c) and (d) added 34853

Chapter XII

1207.36 (d), (g), (h) and (i) revised 19639, 19643
1209.100 Revised; eff. 8–25–95 ..... 33040, 33058
1209.105 Amended; eff. 8–25–95 ..... 33041, 33058
1209.110 (c) revised; eff. 8–25–95 ..... 33041, 33058
1209.200 Revised; eff. 8–25–95 ..... 33041, 33058
1209.215 Revised; eff. 8–25–95 ..... 33041, 33058
1209.220 Revised; eff. 8–25–95 ..... 33041, 33058
1209.225 Revised; eff. 8–25–95 ..... 33041, 33058
1209 Appendixes A and B revised; eff. 8–25–95 ..... 33042, 33058
1210 Added; interim 53515
1220.14 Amended 44639
1220.42 Revised 44639
1222 Heading revised 44639
1222.20 (b)(1) and (5) revised 44640
1222.30 (b) revised 44640
1222.32 Introductory text revised 44640
1222.34 (d) redesignated as (f); new (d), (e) and (g) added 44640
1222.50 (b)(3) through (8) redesignated as (b)(4) through (9); (a), (b)(2), new (4), new (6) and new (8) revised; new (b)(3) added 44640
1228 Authority citation revised 44640
1228.1 (e) added 44640
1230 Heading revised 13908
1230.12 (d)(1)(i) amended 13908
1234.1 Revised 44640
1234.2 Amended 44641

36 CFR—Continued

60 FR Page

Chapter XII—Continued

1234.10 (e) through (l) redesignated as (f) through (m); (d), new (f), new (g), new (h) and new (m) amended; new (e) added 44641
1234.20 (a) and (b) amended 44641
1234.22 (a) and (b) amended 44641
1234.24 Redesignated as 1234.26; new 1234.24 added 44641
1234.26 Redesignated as 1234.28; new 1234.26 redesignated from 1234.24 44641
1234.28 Redesignated as 1234.30; new 1234.28 redesignated from 1234.26 44641
1234.30 Redesignated as 1234.32; new 1234.30 redesignated from 1234.28 44641
1234.32 Redesignated as 1234.34; new 1234.32 redesignated from 1234.30 44641
Heading revised; (a) amended; (d) added 44642
1234.34 Redesignated from 1234.32 44641
(c) added 44642
1236 Revised 29990
1253.3 Introductory text added; (a) through (f), (h), (i) and (j) revised; interim 40416
1253.4 Revised; interim 40417
1253.5 Revised; interim 40417
1253.6 Revised; interim 40417
1253.7 Revised; interim 40417
1258.2 (c)(1) through (5) revised; interim 5580
Regulation at 60 FR 5580 confirmed 26828
1258.12 (b) removed; interim 5580
Regulation at 60 FR 5580 confirmed 26828

Chapter XIV

Chapter XIV Established 33349
1405 Added 45336
1410 Added 45339
1415 Added 64123

1996

36 CFR

61 FR Page

Chapter III

327 Authority citation revised 18500

36 CFR—Continued

61 FR Page

Chapter VII

701.33 (a)(4) revised 49262

Chapter IX

Chapter IX Note added 11308

Chapter XI

1191.2 Revised 39324

Chapter XII

1206.1 Revised 5656
1206.2 (e), (f) and (g) revised 5656
1206.6 Revised 5657
1206.7 Added 5657
1206.10 Revised 5657
1206.12 Revised 5657
1206.14 Removed 5657
1206.16 Revised 5657
1206.18 (a) and (c) revised 5657
1206.20 Revised 5657
1206.30 Revised 5657
1206.32 Revised 5657
1206.34 Removed 5657
1206.36 Revised 5657
1206.38 Revised 5658
1206.50 (c) revised 5658
1206.52 Revised 5658
1206.54 Revised 5658
1206.56 Revised 5658
1206.58 (b), (c) and (d) revised 5658
1206.66 (b) and (c) revised 5659
1206.68 Revised 5659
1206.78 Revised 5659
1206.79 Added 5660
1206.94 Revised 5660
1210 Regulation at 60 FR 53515 confirmed 5660
1228.32 Revised 19554
(a) corrected 24702
1228.54 (a) and (g) revised; (h) added 19554
Second (h)(2) and (3) correctly designated as (h)(3) and (h)(4); (g) and new (h)(3) corrected 24702
1228.150 Table revised 19554
1228.164 (c) revised 19555
1228.184 Revised; eff. 7–24–96 32336
1232 Revised; eff. 7–24–96 32337
1253.3 Regulation at 60 FR 40416 confirmed; (d) revised 390
1253.4 Regulation at 60 FR 40417 confirmed 390
Revised 14972
1253.5 Regulation at 60 FR 40417 confirmed 390

36 CFR—Continued

61 FR Page

Chapter XII—Continued
1253.6 Regulation at 60 FR 40417 confirmed; (h), (i) and (m) revised 390
1253.7 Regulation at 60 FR 40417 confirmed; (g), (h), (l) and (m) revised 390
1275.16 (e) and (g) revised 17844
1275.20 Revised 17845
1275.42 (a) revised; interim 17845
1275.44 (e) added; interim 17845
1275.46 (d), (f) and (i)(2) amended 17845
1275.48 (a) revised; interim 17845
1275.56 Amended 17846
1275.64 (b) amended 17846
(d) and (e) added; interim 17846
1275.66 (a) revised 17846
1275.70 (a) and (b) amended 17846
1275 Appendix A added 17846

1997

(Regulations published from January 1, 1997, through July 1, 1997)

36 CFR

62 FR Page

Chapter XII
1256 Authority citation revised 31724
1256.50—1256.60 (Subpart C) Added; eff. 7–11–97 31725
1258.2 (c)(1), (3), (4) and (5) revised; (c)(6)(v) added; (c)(10) removed; eff. 7–14–97 32203
1258.4 (f) introductory text revised; eff. 7–14–97 32203
1258.10 (a) revised; eff. 7–14–97 32203
1258.11 Removed; eff. 7–14–97 32203
1258.12 (a) through (f) revised; (g) removed; (h) and (i) redesignated as (g) and (h); eff. 7–14–97 32203
1258.16 Revised; eff. 7–14–97 32204