AUTHENTICATED
U.S. GOVERNMENT
INFORMATION
GPO

code of federal regulations

Protection of Environment

40

PARTS 87 to 135

Revised as of July 1, 1997

CONTAINING
A CODIFICATION OF DOCUMENTS
OF GENERAL APPLICABILITY
AND FUTURE EFFECT

AS OF JULY 1, 1997

With Ancillaries

Published by
the Office of the Federal Register
National Archives and Records
Administration

as a Special Edition of
the Federal Register

U.S. GOVERNMENT PRINTING OFFICE
WASHINGTON : 1997

For sale by U.S. Government Printing Office
Superintendent of Documents, Mail Stop: SSOP, Washington, DC 20402–9328

Table of Contents

	Page
Explanation	v
Title 40:	
Chapter I—Environmental Protection Agency (Continued)	3
Finding Aids:	
Material Approved for Incorporation by Reference	823
Table of CFR Titles and Chapters	825
Alphabetical List of Agencies Appearing in the CFR	841
Table of OMB Control Numbers	851
List of CFR Sections Affected	871

Cite this Code: CFR

To cite the regulations in this volume use title, part and section number. Thus, 40 CFR 87.1 *refers to title 40, part 87, section 1.*

Explanation

The Code of Federal Regulations is a codification of the general and permanent rules published in the Federal Register by the Executive departments and agencies of the Federal Government. The Code is divided into 50 titles which represent broad areas subject to Federal regulation. Each title is divided into chapters which usually bear the name of the issuing agency. Each chapter is further subdivided into parts covering specific regulatory areas.

Each volume of the Code is revised at least once each calendar year and issued on a quarterly basis approximately as follows:

Title 1 through Title 16.....as of January 1
Title 17 through Title 27.....as of April 1
Title 28 through Title 41.....as of July 1
Title 42 through Title 50.....as of October 1

The appropriate revision date is printed on the cover of each volume.

LEGAL STATUS

The contents of the Federal Register are required to be judicially noticed (44 U.S.C. 1507). The Code of Federal Regulations is prima facie evidence of the text of the original documents (44 U.S.C. 1510).

HOW TO USE THE CODE OF FEDERAL REGULATIONS

The Code of Federal Regulations is kept up to date by the individual issues of the Federal Register. These two publications must be used together to determine the latest version of any given rule.

To determine whether a Code volume has been amended since its revision date (in this case, July 1, 1997), consult the ''List of CFR Sections Affected (LSA),'' which is issued monthly, and the ''Cumulative List of Parts Affected,'' which appears in the Reader Aids section of the daily Federal Register. These two lists will identify the Federal Register page number of the latest amendment of any given rule.

EFFECTIVE AND EXPIRATION DATES

Each volume of the Code contains amendments published in the Federal Register since the last revision of that volume of the Code. Source citations for the regulations are referred to by volume number and page number of the Federal Register and date of publication. Publication dates and effective dates are usually not the same and care must be exercised by the user in determining the actual effective date. In instances where the effective date is beyond the cutoff date for the Code a note has been inserted to reflect the future effective date. In those instances where a regulation published in the Federal Register states a date certain for expiration, an appropriate note will be inserted following the text.

OMB CONTROL NUMBERS

The Paperwork Reduction Act of 1980 (Pub. L. 96–511) requires Federal agencies to display an OMB control number with their information collection request.

Many agencies have begun publishing numerous OMB control numbers as amendments to existing regulations in the CFR. These OMB numbers are placed as close as possible to the applicable recordkeeping or reporting requirements.

OBSOLETE PROVISIONS

Provisions that become obsolete before the revision date stated on the cover of each volume are not carried. Code users may find the text of provisions in effect on a given date in the past by using the appropriate numerical list of sections affected. For the period before January 1, 1986, consult either the List of CFR Sections Affected, 1949–1963, 1964–1972, or 1973–1985, published in seven separate volumes. For the period beginning January 1, 1986, a ''List of CFR Sections Affected'' is published at the end of each CFR volume.

INCORPORATION BY REFERENCE

What is incorporation by reference? Incorporation by reference was established by statute and allows Federal agencies to meet the requirement to publish regulations in the Federal Register by referring to materials already published elsewhere. For an incorporation to be valid, the Director of the Federal Register must approve it. The legal effect of incorporation by reference is that the material is treated as if it were published in full in the Federal Register (5 U.S.C. 552(a)). This material, like any other properly issued regulation, has the force of law.

What is a proper incorporation by reference? The Director of the Federal Register will approve an incorporation by reference only when the requirements of 1 CFR part 51 are met. Some of the elements on which approval is based are:

(a) The incorporation will substantially reduce the volume of material published in the Federal Register.

(b) The matter incorporated is in fact available to the extent necessary to afford fairness and uniformity in the administrative process.

(c) The incorporating document is drafted and submitted for publication in accordance with 1 CFR part 51.

Properly approved incorporations by reference in this volume are listed in the Finding Aids at the end of this volume.

What if the material incorporated by reference cannot be found? If you have any problem locating or obtaining a copy of material listed in the Finding Aids of this volume as an approved incorporation by reference, please contact the agency that issued the regulation containing that incorporation. If, after contacting the agency, you find the material is not available, please notify the Director of the Federal Register, National Archives and Records Administration, Washington DC 20408, or call (202) 523–4534.

CFR INDEXES AND TABULAR GUIDES

A subject index to the Code of Federal Regulations is contained in a separate volume, revised annually as of January 1, entitled CFR INDEX AND FINDING AIDS. This volume contains the Parallel Table of Statutory Authorities and Agency Rules (Table I), and Acts Requiring Publication in the Federal Register (Table II). A list of CFR titles, chapters, and parts and an alphabetical list of agencies publishing in the CFR are also included in this volume.

An index to the text of ''Title 3—The President'' is carried within that volume.

The Federal Register Index is issued monthly in cumulative form. This index is based on a consolidation of the ''Contents'' entries in the daily Federal Register.

A List of CFR Sections Affected (LSA) is published monthly, keyed to the revision dates of the 50 CFR titles.

REPUBLICATION OF MATERIAL

There are no restrictions on the republication of material appearing in the Code of Federal Regulations.

INQUIRIES

For a legal interpretation or explanation of any regulation in this volume, contact the issuing agency. The issuing agency's name appears at the top of odd–numbered pages.

For inquiries concerning CFR reference assistance, call 202–523–5227 or write to the Director, Office of the Federal Register, National Archives and Records Administration, Washington, DC 20408.

SALES

The Government Printing Office (GPO) processes all sales and distribution of the CFR. For payment by credit card, call 202–512–1800, M–F, 8 a.m. to 4 p.m. e.s.t. or fax your order to 202–512–2233, 24 hours a day. For payment by check, write to the Superintendent of Documents, Attn: New Orders, P.O. Box 371954, Pittsburgh, PA 15250–7954. For GPO Customer Service call 202–512–1803.

RAYMOND A. MOSLEY,
Director,
Office of the Federal Register.

July 1, 1997.

THIS TITLE

Title 40—PROTECTION OF ENVIRONMENT is composed of twenty–two volumes. The parts in these volumes are arranged in the following order: parts 1–49, parts 50–51, parts 52.01–52.1018, part 52.1019–end, parts 53–59, part 60, parts 61–62, parts 63–71, parts 72–80, parts 81–85, part 86, parts 87–135, parts 136–149, parts 150–189, parts 190–259, parts 260–265, parts 266–299, parts 300–399, parts 400–424, parts 425–699, parts 700–789, and part 790 to end. The contents of these volumes represent all current regulations codified under this title of the CFR as of July 1, 1997.

Chapter I—Environmental Protection Agency appears in all twenty–two volumes. A Pesticide Tolerance Commodity/Chemical Index appears in parts 150–189. A Toxic Substances Chemical—CAS Number Index appears in parts 700–789 and part 790 to end. Redesignation Tables appear in the volumes containing parts 50–51, parts 150–189, and parts 700–789. Regulations issued by the Council on Environmental Quality appear in the volume containing part 790 to end.

The OMB control numbers for title 40 appear in §9.1 of this chapter. For the convenience of the user, §9.1 appears in the Finding Aids section of the volumes containing parts 50 to the end.

For this volume, Gregory R. Walton was Chief Editor. The Code of Federal Regulations publication program is under the direction of Frances D. McDonald, assisted by Alomha S. Morris.

Would you like to know. . .

if any changes have been made to the *Code of Federal Regulations* or what documents have been published in the *Federal Register* without reading the *Federal Register* every day? If so, you may wish to subscribe to the *LSA* (List of CFR Sections Affected), the *Federal Register Index,* or both.

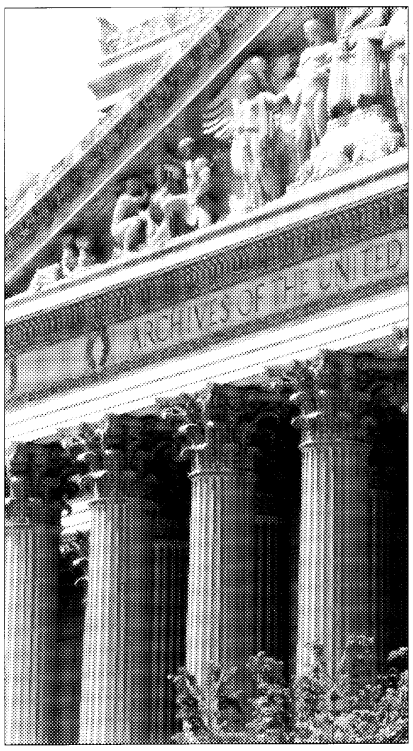

LSA

The *LSA* (List of CFR Sections Affected) is designed to lead users of the *Code of Federal Regulations* to amendatory actions published in the *Federal Register*. The *LSA* is issued monthly in cumulative form. Entries indicate the nature of the changes—such as revised, removed, or corrected.
$27 per year.

Federal Register Index

The index, covering the contents of the daily *Federal Register,* is issued monthly in cumulative form. Entries are carried primarily under the names of the issuing agencies. Significant subjects are carried as cross-references.
$25 per year.

A finding aid is included in each publication which lists *Federal Register* page numbers with the date of publication in the *Federal Register.*

Superintendent of Documents Subscription Order Form

Order Processing Code:
***5421**

❑ **YES,** send me the following indicated subscriptions for one year:

____ **LSA (List of CFR Sections Affected),** (LCS) for $27 per year.

____ **Federal Register Index** (FRSU) $25 per year.

The total cost of my order is $ _____
Price is subject to change. International customers please add 25%.

(Includes regular shipping and handling.)

For privacy check box below:

❑ Do not make my name available to other mailers

Check method of payment:

❑ Check payable to Superintendent of Documents

❑ GPO Deposit Account ☐☐☐☐☐☐☐ — ☐

❑ VISA ❑ MasterCard ☐☐☐☐ (expiration date)

Company or personal name

Street address

City, State, ZIP code

Daytime phone with area code

Purchase order No. (optional)

Credit card No. (must be 20 digits)

Thank you for your order!

Authorizing signature 1/97

Mail To: Superintendent of Documents
PO Box 371954
Pittsburgh PA 15250–7954

Fax your orders (202) 512–2250
Phone your orders (202) 512–1800

Title 40—Protection of Environment

(This book contains parts 87 to 135)

Part

CHAPTER I—Environmental Protection Agency (Continued) 87

CHAPTER I—ENVIRONMENTAL PROTECTION AGENCY (CONTINUED)

SUBCHAPTER C—AIR PROGRAMS (Continued)

Part		*Page*
87	Control of air pollution from aircraft and aircraft engines	5
88	Clean-fuel vehicles	14
89	Control of emissions from new and in-use nonroad engines	40
90	Control of emissions from nonroad spark-ignition engines	144
91	Control of emissions from marine spark-ignition engines	238
93	Determining conformity of Federal actions to State or Federal implementation plans	345
94	[Reserved]	
95	Mandatory patent licenses	386
96–99	[Reserved]	

SUBCHAPTER D—WATER PROGRAMS

100	[Reserved]	
104	Public hearings on effluent standards for toxic pollutants	389
108	Employee protection hearings	395
109	Criteria for State, local and regional oil removal contingency plans	396
110	Discharge of oil	399
112	Oil pollution prevention	400
113	Liability limits for small onshore storage facilities	471
116	Designation of hazardous substances	472
117	Determination of reportable quantities for hazardous substances	482
121	State certification of activities requiring a Federal license or permit	491
122	EPA administered permit programs: The national pollutant discharge elimination system	495
123	State program requirements	573

Part		*Page*
124	Procedures for decisionmaking	598
125	Criteria and standards for the national pollutant discharge elimination system	653
129	Toxic pollutant effluent standards	686
130	Water quality planning and management	697
131	Water quality standards	711
132	Water quality guidance for the Great Lakes System	750
133	Secondary treatment regulation	812
135	Prior notice of citizen suits	816

PART 87—CONTROL OF AIR POLLUTION FROM AIRCRAFT AND AIRCRAFT ENGINES

Subpart A—General Provisions

Sec.
87.1 Definitions.
87.2 Abbreviations.
87.3 General requirements.
87.4 [Reserved]
87.5 Special test procedures.
87.6 Aircraft safety.
87.7 Exemptions.

Subpart B—Engine Fuel Venting Emissions (New and In-Use Aircraft Gas Turbine Engines)

87.10 Applicability.
87.11 Standard for fuel venting emissions.

Subpart C—Exhaust Emissions (New Aircraft Gas Turbine Engines)

87.20 Applicability.
87.21 Standards for exhaust emissions.

Subpart D—Exhaust Emissions (In-Use Aircraft Gas Turbine Engines)

87.30 Applicability.
87.31 Standards for exhaust emissions.

Subparts E–F [Reserved]

Subpart G—Test Procedures for Engine Exhaust Gaseous Emissions (Aircraft and Aircraft Gas Turbine Engines)

87.60 Introduction.
87.61 Turbine fuel specifications.
87.62 Test procedure (propulsion engines).
87.63 [Reserved]
87.64 Sampling and analytical procedures for measuring gaseous exhaust emissions.
87.65—87.70 [Reserved]
87.71 Compliance with gaseous emission standards.

Subpart H—Test Procedures for Engine Smoke Emissions (Aircraft Gas Turbine Engines)

87.80 Introduction.
87.81 Fuel specifications.
87.82 Sampling and analytical procedures for measuring smoke exhaust emissions.
87.83—87.88 [Reserved]
87.89 Compliance with smoke emission standards.

AUTHORITY: Secs. 231, 301(a), Clean Air Act, as amended (42 U.S.C. 7571, 7601(a)), unless otherwise noted.

SOURCE: 47 FR 58470, Dec. 30, 1982, unless otherwise noted.

Subpart A—General Provisions

§ 87.1 Definitions.

(a) As used in this part, all terms not defined herein shall have the meaning given them in the Act:

Act means the Clean Air Act, as amended (42 U.S.C. 7401 *et seq.*).

Administrator means the Administrator of the Environmental Protection Agency and any other officer or employee of the Environmental Protection Agency to whom authority involved may be delegated.

Aircraft means any airplane for which a U.S. standard airworthiness certificate or equivalent foreign airworthiness certificate is issued.

Aircraft engine means a propulsion engine which is installed in or which is manufactured for installation in an aircraft.

Aircraft gas turbine engine means a turboprop, turbofan, or turbojet aircraft engine.

Class TP means all aircraft turboprop engines.

Class TF means all turbofan or turbojet aircraft engines or aircraft engines designed for applications that otherwise would have been fulfilled by turbojet and turbofan engines except engines of class T3, T8, and TSS.

Class T3 means all aircraft gas turbine engines of the JT3D model family.

Class T8 means all aircraft gas turbine engines of the JT8D model family.

Class TSS means all aircraft gas turbine engines employed for propulsion of aircraft designed to operate at supersonic flight speeds.

Commercial aircraft engine means any aircraft engine used or intended for use by an ''air carrier,'' (including those engaged in ''intrastate air transportation'') or a ''commercial operator'' (including those engaged in ''intrastate air transportation'') as these terms are defined in the Federal Aviation Act and the Federal Aviation Regulations.

Commercial aircraft gas turbine engine means a turboprop, turbofan, or turbojet commercial aircraft engine.

Emission measurement system means all of the equipment necessary to transport and measure the level of

emissions. This includes the sample system and the instrumentation system.

Engine Model means all commercial aircraft turbine engines which are of the same general series, displacement, and design characteristics and are usually approved under the same type certificate.

Exhaust emissions means substances emitted to the atmosphere from the exhaust discharge nozzle of an aircraft or aircraft engine.

Fuel venting emissions means raw fuel, exclusive of hydrocarbons in the exhaust emissions, discharged from aircraft gas turbine engines during all normal ground and flight operations.

In-use aircraft gas turbine engine means an aircraft gas turbine engine which is in service.

New aircraft turbine engine means an aircraft gas turbine engine which has never been in service.

Power setting means the power or thrust output of an engine in terms of kilonewtons thrust for turbojet and turbofan engines and shaft power in terms of kilowatts for turboprop engines.

Rated output (rO) means the maximum power/thrust available for takeoff at standard day conditions as approved for the engine by the Federal Aviation Administration, including reheat contribution where applicable, but excluding any contribution due to water injection.

Rated pressure ratio (rPR) means the ratio between the combustor inlet pressure and the engine inlet pressure achieved by an engine operating at rated output.

Sample system means the system which provides for the transportation of the gaseous emission sample from the sample probe to the inlet of the instrumentation system.

Secretary means the Secretary of Transportation and any other officer or employee of the Department of Transportation to whom the authority involved may be delegated.

Shaft power means only the measured shaft power output of a turboprop engine.

Smoke means the matter in exhaust emissions which obscures the transmission of light.

Smoke number (SN) means the dimensionless term quantifying smoke emissions.

Standard day conditions means standard ambient conditions as described in the United States Standard Atmosphere, 1976, (i.e., Temperature =15°C, specific humidity =0.00 kg/ H_2O/kg dry air, and pressure =101325 Pa.)

Taxi/idle (in) means those aircraft operations involving taxi and idle between the time of landing roll-out and final shutdown of all propulsion engines.

Taxi/idle (out) means those aircraft operations involving taxi and idle between the time of initial starting of the propulsion engine(s) used for the taxi and turn on to duty runway.

[47 FR 58470, Dec. 30, 1982, as amended at 49 FR 31875, Aug. 9, 1984; 62 FR 25365, May 8, 1997]

EFFECTIVE DATE NOTE: At 62 FR 25365, May 8, 1997, in § 87.1, paragraph (a) was amended by revising the definition *Class TF*, effective July 7, 1997. For the convenience of the user, the superseded text is set forth as follows:

§ 87.1 Definitions.

(a) * * *

Class TF means all turbofan or turbojet aircraft engines except engines of Class T3, T8, and TSS.

* * * * *

§ 87.2 Abbreviations.

The abbreviations used in this part have the following meanings in both upper and lower case:

CO Carbon Monoxide.

FAA Federal Aviation Administration, Department of Transportation.

HC Hydrocarbon(s).

hr. Hour(s).

LTO Landing takeoff

min. Minute(s).

NO_X Oxides of nitrogen.

rO Rated output.

rPR Rated pressure ratio.

sec. Seconds.

SP Shaft power.

SN Smoke number.

T Temperature, degrees Kelvin.

TIM Time in mode.

W Watt(s).

° Degree.

% Percent.

[47 FR 58470, Dec. 30, 1982, as amended at 49 FR 31875, Aug. 9, 1984; 62 FR 25365, May 8, 1997]

EFFECTIVE DATE NOTE: At 62 FR 25365, May 8, 1997, §87.2 was amended by adding the abbreviations ''CO'' and ''NO_X'', effective July 7, 1997.

§87.3 General requirements.

(a) This part provides for the approval or acceptance by the Administrator or the Secretary of testing and sampling methods, analytical, techniques, and related equipment not identical to those specified in this part. Before either approves or accepts any such alternate, equivalent, or otherwise nonidentical procedures or equipment, the Administrator or the Secretary shall consult with the other in determining whether or not the action requires rulemaking under sections 231 and 232 of the Clean Air Act, as amended, consistent with the Administrator's and the Secretary's responsibilities under sections 231 and 232 of the Act. (42 U.S.C. 7571, 7572).

(b) Under section 232 of the Act, the Secretary issues regulations to insure compliance with this part.

(c) With respect to aircraft of foreign registry, these regulations shall apply in a manner consistent with any obligation assumed by the United States in any treaty, convention or agreement between the United States and any foreign country or foreign countries.

§87.4 [Reserved]

§87.5 Special test procedures.

The Administrator or the Secretary may, upon written application by a manufacturer or operator of aircraft or aircraft engines, approve test procedures for any aircraft or aircraft engine that is not susceptible to satisfactory testing by the procedures set forth herein. Prior to taking action on any such application, the Administrator or the Secretary shall consult with the other.

§87.6 Aircraft safety.

The provisions of this part will be revised if at any time the Secretary determines that an emission standard cannot be met within the specified time without creating a safety hazard.

§87.7 Exemptions.

(a) *Exemptions based on flights for short durations at infrequent intervals.* The emission standards of this part do not apply to engines which power aircraft operated in the United States for short durations at infrequent intervals. Such operations are limited to:

(1) Flights of an aircraft for the purpose of export to a foreign country, including any flights essential to demonstrate the integrity of an aircraft prior to its flight to a point outside the United States.

(2) Flights to a base where repairs, alterations or maintenance are to be performed, or to a point of storage, and flights for the purpose of returning an aircraft to service.

(3) Official visits by representatives of foreign governments.

(4) Other flights the Secretary determines, after consultation with the Administrator, to be for short durations at infrequent intervals. A request for such a determination shall be made before the flight takes place.

(b) *Exemptions for very low production models.* The emissions standards of this part do not apply to engines of very low total production after the date of applicability. For the purpose of this part, ''very low production'' is limited to a maximum total production for United States civil aviation applications of no more than 200 units covered by the same type certificate after January 1, 1984.

(1) A maximum annual production rate after January 1, 1984 of 20 units covered by the same type certificate; and

(2) A maximum total production after January 1, 1984 of 200 units covered by the same type certificate.

(c) *Exemptions for New Engines in Other Categories.* The emissions standards of this part do not apply to engines for which the Secretary determines, with the concurrence of the Administrator, that application of any standard under §87.21 is not justified, based upon consideration of:

(1) Adverse economic impact on the manufacturer.

(2) Adverse economic impact on the aircraft and airline industries at large.

(3) Equity in administering the standards among all economically competing parties.

(4) Public health and welfare effects.

(5) Other factors which the Secretary, after consultation with the Administrator, may deem relevant to the case in question.

(d) *Time Limited Exemptions for In Use Engines.* The emissions standards of this part do not apply to aircraft or aircraft engines for time periods which the Secretary determines, with the concurrence of the Administrator, that any applicable standard under § 87.11(a), § 87.31(a), or § 87.31(c), should not be applied based upon consideration of the following:

(1) Documentation demonstrating that all good faith efforts to achieve compliance with such standard have been made.

(2) Documentation demonstrating that the inability to comply with such standard is due to circumstances beyond the control of the owner or operator of the aircraft.

(3) A plan in which the owner or operator of the aircraft shows that he will achieve compliance in the shortest time which is feasible.

(4) Applications for a determination that any requirements of § 87.11(a), § 87.31(a) or § 87.31(c) do not apply shall be submitted in duplicate to the Secretary in accordance with procedures established by the Secretary.

(e) The Secretary shall publish in the FEDERAL REGISTER the name of the organization to whom exemptions are granted and the period of such exemptions.

(f) No state or political subdivision thereof may attempt to enforce a standard respecting emissions from an aircraft or engine if such aircraft or engine has been exempted from such standard under this part.

[47 FR 58470, Dec. 30, 1982, as amended at 49 FR 31875, Aug. 9, 1984; 49 FR 41002, Oct. 18, 1984]

Subpart B—Engine Fuel Venting Emissions (New and In-Use Aircraft Gas Turbine Engines)

§ 87.10 Applicability.

(a) The provisions of this subpart are applicable to all new aircraft gas turbines of classes T3, T8, TSS and TF equal to or greater than 36 kilonewton rated output, manufactured on or after January 1, 1974, and to all in-use aircraft gas turbine engines of classes T3, T8, TSS and TF equal to or greater than 36 kilonewton rated output manufactured after February 1, 1974.

(b) The provisions of this subpart are also applicable to all new aircraft gas turbines of class TF less than 36 kilonewton rated output and class TP manufactured on or after January 1, 1975 and to all in-use aircraft gas turbines of class TF less than 36 kilonewton rated output and class TP manufactured after January 1, 1975.

[49 FR 41002, Oct. 18, 1984]

§ 87.11 Standard for fuel venting emissions.

(a) No fuel venting emissions shall be discharged into the atmosphere from any new or in-use aircraft gas turbine engine subject to the subpart. This paragraph is directed at the elimination of intentional discharge to the atmosphere of fuel drained from fuel nozzle manifolds after engines are shut down and does not apply to normal fuel seepage from shaft seals, joints, and fittings.

(b) Conformity with the standard set forth in paragraph (a) of this section shall be determined by inspection of the method designed to eliminate these emissions.

Subpart C—Exhaust Emissions (New Aircraft Gas Turbine Engines)

§ 87.20 Applicability.

The provisions of this subpart are applicable to all aircraft gas turbine engines of the classes specified beginning on the dates specified.

§87.21 Standards for exhaust emissions.

(a) Exhaust emissions of smoke from each new aircraft gas turbine engine of class T8 manufactured on or after February 1, 1974, shall not exceed: Smoke number of 30.

(b) Exhaust emissions of smoke from each new aircraft gas turbine engine of class TF and of rated output of 129 kilonewtons thrust or greater, manufactured on or after January 1, 1976, shall not exceed:

$SN=83.6(r0)^{-0.274}$ (r0 is in kilonewtons).

(c) Exhaust emission of smoke from each new aircraft gas turbine engine of class T3 manufactured on or after January 1, 1978, shall not exceed: Smoke number of 25.

(d) Gaseous exhaust emissions from each new commercial aircraft gas turbine engine shall not exceed:

(1) Classes TF, T3, T8 engines greater than 26.7 kilonewtons rated output:

(i) Engines manufactured on or after January 1, 1984:

Hydrocarbons: 19.6 grams/kilonewton rO.

(ii) Engines manufactured on or after July 7, 1997.

Carbon Monoxide: 118 grams/kilonewton rO.

(iii) Engines of a type or model of which the date of manufacture of the first individual production model was on or before December 31, 1995 and for which the date of manufacture of the individual engine was on or before December 31, 1999.

Oxides of Nitrogen: (40 + 2(rPR)) grams/kilonewtons rO.

(iv) Engines of a type or model of which the date of manufacture of the first individual production model was after December 31, 1995 or for which the date of manufacture of the individual engine was after December 31, 1999:

Oxides of Nitrogen: (32 + 1.6(rPR)) grams/kilonewtons rO.

(v) The emission standards prescribed in paragraphs (d)(1) (iii) and (iv) of this section apply as prescribed beginning July 7, 1997.

(2) Class TSS: Engines manufactured on or after January 1, 1984:

$Hydrocarbons=140(0.92)^{rPR}$ grams/kilonewtons rO.

(e) Smoke exhaust emissions from each gas turbine engine of the classes specified below shall not exceed:

(1) Class TF of rated output less than 26.7 kilonewtons manufactured on or after (one year from date of publication):

$SN=83.6(ro)^{-0.274}$ (ro is in kilonewtons) not to exceed a maximum of SN=50.

(2) Classes T3, T8, TSS and TF of rated output equal to or greater than 26.7 kilonewtons manufactured on or after January 1, 1984:

$SN=83.6(ro)^{-0.274}$ (ro is in kilonewtons) not to exceed a maximum of SN=50.

(3) Class TP of rated output equal to or greater than 1,000 kilowatts manufactured on or after January 1, 1984:

$SN=187(ro)^{-0.168}$ (ro is in kilowatts)

(f) The standards set forth in paragraphs (a), (b), (c), (d), and (e) of this section refer to a composite gaseous emission sample representing the operating cycles set forth in the applicable sections of subpart G of this part, and exhaust smoke emissions emitted during operations of the engine as specified in the applicable sections of subpart H of this part, measured and calculated in accordance with the procedures set forth in those subparts.

[47 FR 58470, Dec. 30, 1982, as amended at 49 FR 31875, Aug. 9, 1984; 62 FR 25365, May 8, 1997]

EFFECTIVE DATE NOTE: At 62 FR 25365, May 8, 1997, §87.21 was amended by revising paragraphs (d) and (e)(3), effective July 7, 1997. For the convenience of the user, the superseded text is set forth as follows:

§87.21 Standards for exhaust emissions.

* * * * *

(d) Gaseous exhaust emissions from each new commercial aircraft gas turbine engine that is manufactured on or after January 1, 1984, shall not exceed:

(1) Classes TF, T3, T8 engines equal to or greater than 26.7 kilonewtons rated output:

Hydrocarbons: 19.6 grams/kilonewton r0.

(2) Class TSS:

$Hydrocarbons=140(0.92)^{rPR}$ grams/kilonewton r0.

(e) * * *

(3) Class TP of rated output equal to or greater than 1,000 kilowatts manufactured on or after January 1, 1984:

$SN=187(ro)^{-168}$ (ro is in kilowatts)

* * * * *

Subpart D—Exhaust Emissions (In-use Aircraft Gas Turbine Engines)

§ 87.30 Applicability.

The provisions of this subpart are applicable to all in-use aircraft gas turbine engines certified for operation within the United States of the classes specified beginning on the dates specified.

§ 87.31 Standards for exhaust emissions.

(a) Exhaust emissions of smoke from each in-use aircraft gas turbine engine of Class T8, beginning February 1, 1974, shall not exceed: Smoke number of 30.

(b) Exhaust emissions of smoke from each in-use aircraft gas turbine engine of class TF and of rated output of 129 kilonewtons thrust or greater, beginning January 1, 1976, shall not exceed:

$SN=83.6(r0)^{-0.274}$ (r0 is in kilonewtons).

(c) The standards set forth in paragraphs (a) and (b) of this section refer to exhaust smoke emissions emitted during operations of the engine as specified in the applicable section of subpart H of this part, and measured and calculated in accordance with the procedures set forth in this subpart.

[47 FR 58470, Dec. 30, 1982, as amended at 48 FR 2718, Jan. 20, 1983]

Subparts E–F [Reserved]

Subpart G—Test Procedures for Engine Exhaust Gaseous Emissions (Aircraft and Aircraft Gas Turbine Engines)

§ 87.60 Introduction.

(a) Except as provided under § 87.5, the procedures described in this subpart shall be the test program to determine the conformity of new aircraft gas turbine engines with the applicable standards set forth in this part.

(b) The test consists of operating the engine at prescribed power settings on an engine dynamometer (for engines producing primarily shaft power) or thrust measuring test stand (for engines producing primarily thrust). The exhaust gases generated during engine operation are sampled continuously for specific component analysis through the analytical train.

(c) The exhaust emission test is designed to measure hydrocarbons, carbon monoxide, carbon dioxide, and oxides of nitrogen concentrations, and to determine mass emissions through calculations during a simulated aircraft landing-takeoff cycle (LTO). The LTO cycle is based on time in mode data during high activity periods at major airports. The test for propulsion engines consists of at least the following four modes of engine operation: taxi/idle, takeoff, climbout, and approach. The mass emission for the modes are combined to yield the reported values.

(d) When an engine is tested for exhaust emissions on an engine dynamometer or test stand, the complete engine shall be used with all accessories which might reasonably be expected to influence emissions to the atmosphere installed and functioning, if not otherwise prohibited by § 87.62(a)(2). Use of service air bleed and shaft power extraction to power auxiliary gearbox-mounted components required to drive aircraft systems is not permitted.

(e) Other gaseous emissions measurement systems may be used if shown to yield equivalent results and if approved in advance by the Administrator or the Secretary.

[47 FR 58470, Dec. 30, 1982, as amended at 49 FR 31875, Aug. 9, 1984; 62 FR 25366, May 8, 1997]

EFFECTIVE DATE NOTE: At 62 FR 25366, May 8, 1997, § 87.60 was amended by revising paragraph (c), effective July 7, 1997. For the convenience of the user, the superseded text is set forth as follows:

§ 87.60 Introduction.

* * * * *

(c) The exhaust emission test is designed to measure hydrocarbons, carbon monoxide and carbon dioxide concentrations, and to determine mass emissions through calculations during a simulated aircraft landing-takeoff cycle (LTO). The LTO cycle is based

on time in mode data during high activity periods at major airports. The test for propulsion engines consists of a least the following four modes of engine operation: Taxi/idle, takeoff, climbout, and approach. The mass emission for the modes are combined to yield the reported values.

* * * * *

§87.61 Turbine fuel specifications.

For exhaust emission testing, fuel meeting the specifications listed in this section shall be used. Additives used for the purpose of smoke suppression (such as organometallic compounds) shall not be present.

Property and Allowable Range of Values

Density kg/m³ at 15 °C: 780–820.
Distillation temperature, °C: 10% boiling point, 155–201; final boiling point, 235–285.
Net heat of combustion, MJ/kg: 42.86–43.50.
Aromatics, volume %: 15–23.
Naphthalenes, volume %: 1.0–3.5.
Smoke point, mm: 20–28.
Hydrogen, mass %: 13.4–14.1.
Sulfur, mass %: less than 0.3%.
Kinematic viscosity at −20 °C, mm²/s: 2.5–6.5.

[62 FR 25366, May 8, 1997]

EFFECTIVE DATE NOTE: At 62 FR 25366, May 8, 1997, §87.61 was revised, effective July 7, 1997. For the convenience of the user, the superseded text is set forth as follows:

§87.61 Turbine fuel specifications.

For exhaust emission testing, fuel meeting the specifications listed below shall be used. Additives used for the purpose of smoke suppression (such as organometallic compounds) shall not be present.

Property and Allowable Range of Values

Specific gravity at 15 °C: 0.78–0.82.
Distillation temperature, °C: 10% boiling point, 160–201; final boiling point, 240–285.
Net heat of combustion, kJ/kg: 42,860–43,500.
Aromatics, volume %: 15–20.
Naphthalenes, volume %: 1.0–3.0.
Smoke point, mm: 20–28.
Hydrogen, mass %: 13.4–14.0.
Sulfur, mass %: less than 0.3%.
Kinematic viscosity at −20 °C, mm/s: 4.0–6.5.

[49 FR 41002, Oct. 18, 1984]

§87.62 Test procedure (propulsion engines).

(a)(1) The engine shall be tested in each of the following engine operating modes which simulate aircraft operation to determine its mass emission rates. The actual power setting, when corrected to standard day conditions, should correspond to the following percentages of rated output. Analytical correction for variations from reference day conditions and minor variations in actual power setting should be specified and/or approved by the Secretary:

Mode	Class		
	TP	TF, T3, T8	TSS
Taxi/idle	(1)	(1)	(1)
Takeoff	100	100	100
Climbout	90	85	65
Descent	NA	NA	15
Approach	30	30	34

[1] See paragraph (a)(2) of this section.

(2) The taxi/idle operating modes shall be carried out at a power setting of 7% rated thrust unless the Secretary determines that the unique characteristics of an engine model undergoing certification testing at 7% would result in substantially different HC and CO emissions than if the engine model were tested at the manufacturers recommended idle power setting. In such cases the Secretary shall specify an alternative test condition.

(3) The times in mode (TIM) shall be as specified below:

Mode	Class		
	TP	TF, T3 or T8	TSS
Taxi/idle (minutes)	26.0	26.0	26.0
Takeoff	0.5	0.7	1.2
Climbout	2.5	2.2	2.0
Descent	N/A	N/A	1.2
Approach	4.5	4.0	2.3

(b) Emissions testing shall be conducted on warmed-up engines which have achieved a steady operating temperature.

[47 FR 58470, Dec. 30, 1982, as amended at 62 FR 25366, May 8, 1997]

EFFECTIVE DATE NOTE: At 62 FR 25366, May 8, 1997, §87.62 was amended by revising paragraph (a)(2), effective July 7, 1997. For the convenience of the user, the superseded text is set forth as follows:

§ 87.62 Test procedure (propulsion engines).

(a) * * *

(2) The taxi/idle operating modes shall be carried out at a power setting of 7% rated thrust unless the Secretary determines that the unique characteristics of an engine model undergoing certification testing at 7% would result in substantially different HC emissions than if the engine model were tested at the manufacturers recommended idle power setting. In such cases the Secretary shall specify an alternative test condition.

* * * * *

§ 87.63 [Reserved]

§ 87.64 Sampling and analytical procedures for measuring gaseous exhaust emissions.

The system and procedures for sampling and measurement of gaseous emissions shall be as specified by Appendices 3 and 5 to International Civil Aviation Organization (ICAO) Annex 16, Environmental Protection, Volume II, Aircraft Engine Emissions, Second Edition, July 1993, which are incorporated herein by reference. This incorporation by reference was approved by the Director of the Federal Register in accordance with 5 U.S.C. 552(a) and 1 CFR part 51. These materials are incorporated as they exist on the date of the approval and a notice of any change in these materials will be published in the FEDERAL REGISTER. Frequent changes are not anticipated. Copies may be inspected at U.S. EPA, OAR, 401 M Street, Southwest, Washington, DC 20460, or at the Office of the Federal Register, 800 North Capitol Street, NW., suite 700, Washington DC. Copies of this document can be obtained from the International Civil Aviation Organization (ICAO), Document Sales Unit, P.O. Box 400, Succursale: Place de L'Aviation Internationale, 1000 Sherbrooke Street West, Suite 400, Montreal, Quebec, Canada H3A 2R2.

[62 FR 25366, May 8, 1997]

Effective Date Note: At 62 FR 25366, May 8, 1997, § 87.64 was revised, effective July 7, 1997. For the convenience of the user, the superseded text is set forth as follows:

§ 87.64 Sampling and analytical procedures for measuring gaseous exhaust emissions.

The system and procedures for sampling and measurement of gaseous emissions shall be as specified by appendices 3 and 5 to ICAO Annex 16, Volume II, Aircraft Engine Emissions, First Edition, June 1981, which are incorporated herein by reference. This document can be obtained from the International Civil Aviation Organization, P.O. Box 400, Succursale: Place de L'Aviation Internationale, 1000 Sherbrooke Street West, Montreal, Quebec, Canada H3A 2R2 at $3.00 per copy. It is also available for inspection at the Office of the Federal Register Information Center, 800 North Capitol Street, NW., suite 700, Washington, DC. This incorporation by reference was approved by the Director of the Federal Register on September 3, 1982. These materials are incorporated as they exist on the date of the approval and a notice of any change in these materials will be published in the FEDERAL REGISTER. Frequent changes are not anticipated.

§§ 87.65—87.70 [Reserved]

§ 87.71 Compliance with gaseous emission standards.

Compliance with each gaseous emission standard by an aircraft engine shall be determined by comparing the pollutant level in grams/kilonewton/thrust/cycle or grams/kilowatt/cycle as calculated in § 87.64 with the applicable emission standard under this part. An acceptable alternative to testing every engine is described in Appendix 6 to International Civil Aviation Organization (ICAO) Annex 16, Environmental Protection, Volume II, Aircraft Engine Emissions, Second Edition, July 1993, which is incorporated herein by reference. This incorporation by reference was approved by the Director of the Federal Register in accordance with 5 U.S.C. 552(a) and 1 CFR part 51. These materials are incorporated as they exist on the date of the approval and a notice of any change in these materials will be published in the FEDERAL REGISTER. Frequent changes are not anticipated. Copies may be inspected at U.S. EPA, OAR, 401 M Street, Southwest, Washington, DC 20460, or at the Office of the Federal Register, 800 North Capitol Street, NW., suite 700, Washington, DC. Copies of this document can be obtained from the International Civil Aviation Organization (ICAO), Document Sales Unit, P.O. Box 400, Succursale: Place de L'Aviation Internationale, 1000 Sherbrooke Street

West, Suite 400, Montreal, Quebec, Canada H3A 2R2. Other methods of demonstrating compliance may be approved by the Secretary with the concurrence of the Administrator.

[62 FR 25366, May 8, 1997]

EFFECTIVE DATE NOTE: At 62 FR 25366, May 8, 1997, §87.71 was revised, effective July 7, 1997. For the convenience of the user, the superseded text is set forth as follows:

§87.71 Compliance with gaseous emission standards.

Compliance with each gaseous emission standard by an aircraft engine shall be determined by comparing the pollutant level in grams/kilonewton/thrust/cycle or grams/kilowatt/cycle as calculated in §87.64 with the applicable emission standard under this part.

Subpart H—Test Procedures for Engine Smoke Emissions (Aircraft Gas Turbine Engines)

§87.80 Introduction.

Except as provided under §87.5, the procedures described in this subpart shall be the test program to determine the conformity of new and in-use gas turbine engines with the applicable standards set forth in this part. The test is essentially the same as that described in §§87.60 through 87.62, except that the test is designed to determine the smoke emission level at various operating points representative of engine usage in aircraft. Other smoke measurement systems may be used if shown to yield equivalent results and if approved in advance by the Administrator or the Secretary.

§87.81 Fuel specifications.

Fuel having specifications as provided in §87.61 shall be used in smoke emission testing.

§87.82 Sampling and analytical procedures for measuring smoke exhaust emissions.

The system and procedures for sampling and measurement of smoke emissions shall be as specified by Appendix 2 to International Civil Aviation Organization (ICAO) Annex 16, Volume II, Environmental Protection, Aircraft Engine Emissions, Second Edition, July 1993, which are incorporated herein by reference. This incorporation by reference was approved by the Director of the Federal Register in accordance with 5 U.S.C. 552(a) and 1 CFR part 51. These materials are incorporated as they exist on the date of the approval and a notice of any change in these materials will be published in the FEDERAL REGISTER. Frequent changes are not anticipated. Copies may be inspected at U.S. EPA, OAR, 401 M Street, SW., Washington, DC 20460, or at the Office of the Federal Register, 800 North Capitol Street, NW., suite 700, Washington, DC. Copies of this document can be obtained from the International Civil Aviation Organization (ICAO), Document Sales Unit, P.O. Box 400, Succursale: Place de L'Aviation Internationale, 1000 Sherbrooke Street West, Suite 400, Montreal, Quebec, Canada H3A 2R2.

[62 FR 25366, May 8, 1997]

EFFECTIVE DATE NOTE: At 62 FR 25366, May 8, 1997, §87.82 was revised, effective July 7, 1997. For the convenience of the user, the superseded text is set forth as follows:

§87.82 Sampling and analytical procedures for measuring smoke exhaust emissions.

The system and procedures for sampling and measurement of smoke emissions shall be as specified by Appendix 2, Volume II, Aircraft Engine Emissions to ICAO Annex 16, Aircraft Engine Emissions, First Edition, June, 1981. This document can be obtained from the International Civil Aviation Organization, P.O. Box 400, Succursale: Place de L'Aviation Internationale, 1000 Sherbrooke Street West, Montreal, Quebec, Canada H3A 2R2 at $3.00 per copy. It is also available for inspection at the Office of the Federal Register Information Center, 800 North Capitol Street, NW., suite 700, Washington, DC. This incorporation by reference was approved by the Director of the Federal Register on September 3, 1982. These materials are incorporated as they exist on the date of the approval and a notice of any change in these materials will be published in the FEDERAL REGISTER. Frequent changes are not anticipated.

§§87.83—87.88 [Reserved]

§87.89 Compliance with smoke emission standards.

Compliance with each smoke emission standard shall be determined by comparing the plot of SN as a function of power setting with the applicable emission standard under this part. The SN at every power setting must be

such that there is a high degree of confidence that the standard will not be exceeded by any engine of the model being tested. An acceptable alternative to testing every engine is described in Appendix 6 to International Civil Aviation Organization (ICAO) Annex 16, Environmental Protection, Volume II, Aircraft Engine Emissions, Second Edition, July 1993, which is incorporated herein by reference. This incorporation by reference was approved by the Director of the Federal Register in accordance with 5 U.S.C. 552(a) and 1 CFR part 51. These materials are incorporated as they exist on the date of the approval and a notice of any change in these materials will be published in the FEDERAL REGISTER. Frequent changes are not anticipated. Copies may be inspected at U.S. EPA, OAR, 401 M Street, Southwest, Washington, DC 20460, or at the Office of the Federal Register, 800 North Capitol Street, NW., suite 700, Washington, DC. Copies of this document can be obtained from the International Civil Aviation Organization (ICAO), Document Sales Unit, P.O. Box 400, Succursale: Place de L'Aviation Internationale, 1000 Sherbrooke Street West, Suite 400, Montreal, Quebec, Canada H3A 2R2.

[62 FR 25366, May 8, 1997]

EFFECTIVE DATE NOTE: At 62 FR 25366, May 8, 1997, § 87.89 was revised, effective July 7, 1997. For the convenience of the user, the superseded text is set forth as follows:

§ 87.89 Compliance with smoke emission standards.

Compliance with each smoke emission standard shall be determined by comparing the plot of SN as a function of power setting with the applicable emission standard under this part. The SN at every power setting must be such that there is a high degree of confidence that the standard will not be exceeded by any engine of the model being tested. The level of confidence required, a practical interpretation of the requirement for total compliance, and a testing program to assure compliance will be established by the Secretary prior to January 1, 1984, and shall be approved by the Administrator.

PART 88—CLEAN-FUEL VEHICLES

Subpart A—Emission Standards for Clean-Fuel Vehicles

Sec.

88.101–94 General applicability.
88.102–94 Definitions.
88.103–94 Abbreviations.
88.104–94 Clean–fuel vehicle tailpipe emission standards for light–duty vehicles and light–duty trucks.
88.105–94 Clean–fuel fleet emission standards for heavy–duty engines.

Subpart B—California Pilot Test Program

88.201–94 Scope.
88.202–94 Definitions.
88.203–94 Abbreviations.
88.204–94 Sales requirements for the California Pilot Test Program.
88.205–94 California Pilot Test Program Credits Program.
88.206–94 State Opt–in for the California Pilot Test Program.
TABLES TO SUBPART B OF PART 88

Subpart C—Clean-Fuel Fleet Program

88.301–93 General applicability.
88.302–93 Definitions.
88.302–94 Definitions.
88.303–93 Abbreviations.
88.304–94 Clean-fuel fleet vehicle credit program.
88.305–94 Clean–fuel fleet vehicle labeling requirements for heavy–duty vehicles.
88.306–94 Requirements for a converted vehicle to qualify as a clean–fuel fleet vehicle.
88.307–94 Exemption from temporal transporation control measures for CFFVs.
88.308–94 Programmatic requirements for clean–fuel fleet vehicles.
88.309 [Reserved]
88.310–94 Applicability to covered federal fleets.
88.311–93 Emissions standards for Inherently Low-Emission Vehicles.
88.311–98 Emissions standards for Inherently Low-Emission Vehicles.
88.312–93 Inherently Low-Emission Vehicle labeling.
88.313–93 Incentives for the purchase of Inherently Low-Emission Vehicles.
TABLES TO SUBPART C OF PART 88

AUTHORITY: 42 U.S.C. 7410, 7418, 7581, 7582, 7583, 7584, 7586, 7588, 7589, 7601(a).

SOURCE: 57 FR 60046, Dec. 17, 1992, unless otherwise noted.

Subpart A—Emission Standards for Clean-Fuel Vehicles

§ 88.101–94 General applicability.

The clean-fuel vehicle standards and provisions of this subpart are applicable to vehicles used in subpart B of this part (the Clean Fuel Fleet Program)

and subpart C of this part (the California Pilot Test Program).

[59 FR 50074, Sept. 30, 1994]

§88.102—94 Definitions.

Any terms defined in 40 CFR part 86 and not defined in this part shall have the meaning given them in 40 CFR part 86, subpart A.

Adjusted Loaded Vehicle Weight is defined as the numerical average of the vehicle curb weight and the GVWR.

Dual Fuel Vehicle (or Engine) means any motor vehicle (or motor vehicle engine) engineered and designed to be operated on two different fuels, but not on a mixture of the fuels.

Flexible Fuel Vehicle (or Engine) means any motor vehicle (or motor vehicle engine) engineered and designed to be operated on any mixture of two or more different fuels.

Heavy Light-Duty Truck means any light-duty truck rated greater than 6000 lbs. GVWR.

Light Light-Duty Truck means any light-duty truck rated through 6000 lbs GVWR.

Loaded Vehicle Weight is defined as the curb weight plus 300 lbs.

Low-Emission Vehicle means any light-duty vehicle or light-duty truck conforming to the applicable Low-Emission Vehicle standard, or any heavy-duty vehicle with an engine conforming to the applicable Low-Emission Vehicle standard.

Non-methane Hydrocarbon Equivalent means the sum of the carbon mass emissions of non-oxygenated non-methane hydrocarbons plus the carbon mass emissions of alcohols, aldehydes, or other organic compounds which are separately measured in accordance with the applicable test procedures of 40 CFR part 86, expressed as gasoline-fueled vehicle non-methane hydrocarbons. In the case of exhaust emissions, the hydrogen-to-carbon ratio of the equivalent hydrocarbon is 1.85:1. In the case of diurnal and hot soak emissions, the hydrogen-to-carbon ratios of the equivalent hydrocarbons are 2.33:1 and 2.2:1 respectively.

Non-methane Organic Gas is defined as in section 241(3) Clean Air Act as amended (42 U.S.C. 7581(3)).

Test Weight is defined as the average of the curb weight and the GVWR.

Transitional Low-Emission Vehicle means any light-duty vehicle or light-duty truck conforming to the applicable Transitional Low-Emission Vehicle standard.

Ultra Low-Emission Vehicle means any light-duty vehicle or light-duty truck conforming to the applicable Ultra Low-Emission Vehicle standard, or any heavy-duty vehicle with an engine conforming to the applicable Ultra Low-Emission Vehicle standard.

Zero-Emission Vehicle means any light-duty vehicle or light-dutytruck conforming to the applicable Zero-Emission Vehicle standard, or any heavy-duty vehicle conforming to the applicable Zero-Emission Vehicle standard.

[57 FR 60046, Dec. 17, 1992. Redesignated and amended at 59 FR 50074, Sept. 30, 1994]

§88.103–94 Abbreviations.

The abbreviations of part 86 also apply to this subpart. The abbreviations in this section apply to all of part 88.

ALVW—Adjusted Loaded Vehicle Weight .
CO—Carbon Monoxide.
HCHO—Formaldehyde.
HC—Hydrocarbon.
HDV—Heavy-Duty Vehicle.
LDT—Light-Duty Truck.
LDV—Light-Duty Vehicle.
NMHC—Non-Methane Hydrocarbon.
NMHCE—Non-Methane Hydrocarbon Equivalent.
NMOG—Non-Methane Organic Gas.
NOx—Nitrogen Oxides.
PM—Particulate Matter.
GVWR—Gross Vehicle Weight Rating.
LVW—Loaded Vehicle Weight.
TW—Test Weight.
TLEV—Transitional Low-Emission Vehicle.
LEV—Low-Emission Vehicle.
ULEV—Ultra Low-Emission Vehicle.
ZEV—Zero-Emission Vehicle.

[57 FR 60046, Dec. 17, 1992. Redesignated and amended at 59 FR 50074, Sept. 30, 1994]

§88.104–94 Clean-fuel vehicle tailpipe emission standards for light-duty vehicles and light-duty trucks.

(a) A light-duty vehicle or light-duty truck will be considered as a TLEV, LEV, ULEV, or ZEV if it meets the applicable requirements of this section.

(b) Light-duty vehicles certified to the exhaust emission standards for TLEVs, LEVs, and ULEVs in Tables A104–1 and A104–2 shall be considered as

meeting the requirements of this section for that particular vehicle emission category for model years 1994–2000 for the California Pilot Program.

(c) Light-duty vehicles certified to the exhaust emission standards for LEVs and ULEVs in Tables A104–1 and A104–2 shall be considered as meeting the requirements of this section for that particular vehicle emission category for model years 2001 and later for the California Pilot Program, and for model years 1998 and later for the Clean Fuel Fleet Program.

(d) Light light-duty trucks certified to the exhaust emission standards for a specific weight category for TLEVs, LEVs, and ULEVs in Tables A104–3 and A104–4 shall be considered as meeting the requirements of this section for that particular vehicle emission category. For model years 1994–2000 for the California Pilot Program.

(e) Light Light-duty trucks certified to the exhaust emission standards for a specific weight category for LEVs and ULEVs in Tables A104–3 and A104–4 shall be considered as meeting the requirements of this section for that particular vehicle emission category. For model years 2001 and later for the California Pilot Program, and for model years 1998 and later for the Clean Fuel Fleet Program.

(f) Heavy light-duty trucks certified to the exhaust emission standards for a specific weight category of LEVs and ULEVs in Tables A104–5 and A104–6 for model years 1998 and later shall be considered as meeting the requirements of this section for that particular vehicle emission category.

(g) A light-duty vehicle or light-duty truck shall be certified as a ZEV if it is determined by engineering analysis that the vehicle satisfies the following conditions:

(1) The vehicle fuel system(s) must not contain either carbon or nitrogen compounds (including air) which, when burned, form any of the pollutants listed in Table A104–1 as exhaust emissions.

(2) All primary and auxiliary equipment and engines must have no emissions of any of the pollutants listed in Table A104–1.

(3) The vehicle fuel system(s) and any auxiliary engine(s) must have no evaporative emissions in use.

(4) Any auxiliary heater must not operate at ambient temperatures above 40 degrees Fahrenheit.

(h) *NMOG standards for flexible- and dual-fueled vehicles when operating on clean alternative fuel*—(1) *Light-duty vehicles, and light light-duty trucks.* Flexible- and dual-fueled LDVs and light LDTs of 1996 model year and later shall meet all standards in Table A104–7 for vehicles of the applicable model year, loaded vehicle weight, and vehicle emission category.

(2) *Light-duty trucks above 6,000 lbs GVWR.* Flexible- and dual-fueled LDTs above 6,000 lbs. GVWR of 1998 model year and later shall meet all standards in Table A104–8 for vehicles of the applicable test weight and vehicle emission category.

(i) *NMOG standards for flexible- and dual-fueled vehicles when operating on conventional fuel*—(1) *Light-duty vehicles, and light light-duty trucks.* Flexible- and dual-fueled LDVs and light LDTs of 1996 model year and later shall meet all standards in Table A104–9 for vehicles of the applicable model year, loaded vehicle weight, and vehicle emission category.

(2) *Light-duty trucks above 6,000 lbs GVWR.* Flexible- and dual-fueled LDTs of 1998 model year and later shall meet all standards in Table A104–10 for vehicles of the applicable test weight and vehicle emission category.

(j) *Other standards for flexible- and dual-fueled vehicles.* When operating on clean alternative fuel, flexible- and dual- fueled light-duty vehicles and light light-duty trucks must also meet the appropriate standards for carbon monoxide, oxides of nitrogen, formaldehyde, and particulate matter as designated in paragraphs (a) through (f) of this section as well as all other applicable standards and requirements. When operating on conventional fuel, flexible- and dual-fueled vehicles must also meet all other applicable standards and requirements in 40 CFR part 86.

(k) Motor vehicles subject to standards and requirements of this section shall also comply with all applicable standards and requirements of 40 CFR

part 86, except that any exhaust emission standards in 40 CFR part 86 pertaining to pollutants for which standards are established in this section shall not apply. For converted vehicles, the applicable standards and requirements of 40 CFR part 86 and this part 88 shall apply based on the model year in which the conversion is performed, regardless of the model year in which the base vehicle was originally manufactured prior to conversion.

(1) Gaseous-fueled, diesel-fueled, and electric clean-fuel vehicles are waived from cold CO test requirements of subpart C of this part if compliance is demonstrated by engineering analysis or test data.

(2) The standards in this section shall be administered and enforced in accordance with the California Regulatory Requirements Applicable to the Clean Fuel Fleet and California Pilot Programs, April 1, 1994, which are incorporated by reference.

(i) This incorporation by reference was approved by the Director of the Federal Register in accordance with 5 U.S.C. 552(a) and 1 CFR part 51.

(ii) Copies may be inspected at U.S. EPA, OAR, 401 M Street, Southwest, Washington, DC 20460, or at the Office of the Federal Register, 800 North Capitol Street, NW., suite 700, Washington, DC. Copies of these materials may be obtained from Barclay's Law Publishers, 400 Oyster Point Boulevard, P.O. Box 3066, South San Francisco, CA 94080, phone (415) 244–6611.

TABLES TO § 88.104–94

TABLE A104–1.—INTERMEDIATE USEFUL LIFE STANDARDS (G/MI) FOR LIGHT-DUTY VEHICLES FOR HCS, CO, NO_X, HCHO, and PM

	Vehicle emission category	NMOG	CO	NO_X	HCHO	PM [1]
	TLEV	0.125	3.4	0.4	0.015	.....
	LEV	[2] .075	[2] 3.4	.2	[2] .015	.....
	ULEV	.040	1.7	[2] .2	.008	.....

[1] Applies to diesel vehicles only.
[2] Applies to ILEVs.

TABLE A104–2.—FULL USEFUL LIFE STANDARDS (G/MI) FOR LIGHT-DUTY VEHICLES FOR HCS, CO, NO_X, HCHO, and PM

	Vehicle emission category	NMOG	CO	NO_X	HCHO	PM [1]
	TLEV	0.156	4.2	0.6	0.018	0.08
	LEV	[2] 0.090	[2] 4.2	.3	[2] .018	[2] .08
	ULEV	.055	2.1	[2] .3	.011	.04

[1] Applies to diesel vehicles only.
[2] Applies to ILEVs.

TABLE A104–3.—INTERMEDIATE USEFUL LIFE STANDARDS (G/MI) FOR LIGHT LIGHT-DUTY TRUCKS FOR HCS, CO, NO_X, HCHO, and PM

LVW (lbs)	Vehicle emission category	NMOG	CO	NO_X	HCHO	PM [1]
0–3750	TLEV	.125	3.4	.4	.015	.....
	LEV	[2] .075	[2] 3.4	.2	[2] .015	.....
	ULEV	.040	1.7	[2] .2	.008	.....
3751–5750	TLEV	0.160	4.4	.7	.018	.....
	LEV	[2] .100	[2] 4.4	.4	[2] .018	.....
	ULEV	.050	2.2	[2] .4	.009	.....

[1] Applies to diesel vehicles only.
[2] Applies to ILEVs.

TABLE A104–4.—FULL USEFUL LIFE STANDARDS (G/MI) FOR LIGHT LIGHT-DUTY TRUCKS FOR HCS, CO, NO_X, HCHO, and PM

LVW (lbs)	Vehicle emission category	NMOG	CO	NO_X	HCHO	PM[1]
0–3750	TLEV	0.156	4.2	0.6	0.018	0.08

TABLE A104–4.—FULL USEFUL LIFE STANDARDS (G/MI) FOR LIGHT LIGHT-DUTY TRUCKS FOR HCS, CO, NO_X, HCHO, and PM—Continued

LVW (lbs)	Vehicle emission category	NMOG	CO	NO_X	HCHO	PM[1]
	LEV	[2]0.090	[2]4.2	0.3	[2].018	[2].08
	ULEV	.055	2.1	[2].3	.011	.04
3751–5750	TLEV	.200	5.5	.9	.023	.08
	LEV	[2].130	[2]5.5	.5	[2].023	[2].08
	ULEV	.070	2.8	[2].5	.013	.04

[1] Applies to diesel vehicles only.
[2] Applies to ILEVs.

TABLE A104–5.—INTERMEDIATE USEFUL LIFE STANDARDS (G/MI) FOR HEAVY LIGHT-DUTY TRUCKS FOR HCS, CO, NO_X, HCHO, and PM

ALVW (lbs)	Vehicle emission category	NMOG	CO	NO_X[2]	HCHO	PM[1]
0–3750	LEV	[3]0.125	[3]3.4	0.4	[3]0.015	
	ULEV	.075	1.7	[3].2	.008	
3751–5750	LEV	[3].160	[3]4.4	.7	[3].018	
	ULEV	.100	2.2	[3].4	.009	
5751–	LEV	[3].195	[3]5.0	1.1	[3].022	
	ULEV	.117	2.5	[3].6	.011	

[1] Applies to diesel vehicles only.
[2] Does not apply to diesel vehicles.
[3] Applies to ILEVs.

TABLE A104–6.—FULL USEFUL LIFE STANDARDS (G/MI) FOR HEAVY LIGHT-DUTY TRUCKS FOR HCS, CO, NO_X, HCHO, and PM

ALVW (lbs)	Vehicle emission category	NMOG	CO	NO_X	HCHO	PM[1]
0–3750	LEV	[2]0.180	[2]5.0	0.6	[2]0.022	[2]0.08
	ULEV	.107	2.5	[2].3	.012	.04
3751–5750	LEV	[2].230	[2]6.4	1.0	[2].027	[2].10
	ULEV	.143	3.2	[2].5	.013	.05
5751–	LEV	[2].280	[2]7.3	1.5	[2].032	[2].12
	ULEV	.167	3.7	[2].8	.016	.06

[1] Applies to diesel vehicles only.
[2] Applies to ILEVs.

TABLE A104–7.—NMOG STANDARDS (G/MI) FOR FLEXIBLE- AND DUAL-FUELED VEHICLES WHEN OPERATING ON CLEAN ALTERNATIVE FUEL FOR LIGHT LIGHT-DUTY TRUCKS AND LIGHT-DUTY VEHICLES

Vehicle type	50,000 mile NMOG standard	100,000 mile NMOG standard
MY 1996 and later:		
LDTs (0–3,750 lbs. LVW) and LDVs	0.125	0.156
LDTs (3,751–5,750 lbs. LVW)	.160	.200
Beginning MY 2001:		
LDTs (0–3,750 lbs. LVW) and LDVs	.075	.090
LDTs (3,751–5,750 lbs. LVW)	.100	.130

TABLE A104–8.—NMOG STANDARDS (G/MI) FOR FLEXIBLE- AND DUAL-FUELED VEHICLES WHEN OPERATING ON CLEAN ALTERNATIVE FUEL FOR HEAVY LIGHT-DUTY TRUCKS

Vehicle type	50,000 mile NMOG standard	120,000 mile NMOG standard
Beginning MY 1998:		
LDTs (0–3,750 lbs. ALVW)	0.125	0.180
LDTs (3,751–5,750 lbs. ALVW)	.160	.230
LDTs (5,751–8,500 lbs. ALVW)	.195	.280

TABLE A104–9.—NMOG STANDARDS (G/MI) FOR FLEXIBLE- AND DUAL-FUELED VEHICLES WHEN OPERATING ON CONVENTIONAL FUEL FOR LIGHT LIGHT-DUTY TRUCKS AND LIGHT-DUTY VEHICLES

Vehicle type	50,000 mile NMOG standard	100,000 mile NMOG standard
Beginning MY 1996:		
LDTs (0–3,750 lbs. LVW) and LDVs	0.25	0.31
LDTs (3,751–5,750 lbs. LVW)	.32	.40
Beginning MY 2001:		
LDTs (0–3,750 lbs. LVW) and LDVs	.125	.156
LDTs (3,751–5,750 lbs. LVW)	.160	.200

TABLE A104–10.—NMOG STANDARDS (G/MI) FOR FLEXIBLE- AND DUAL-FUELED VEHICLES WHEN OPERATING ON CONVENTIONAL FUEL FOR LIGHT LIGHT-DUTY TRUCKS

Vehicle type	50,000 mile NMOG standard	120,000 mile NMOG standard
Beginning MY 1998:		
LDTs (0–3,750 lbs. ALVW)	0.25	0.36
LDTs (3,751–5,750 lbs. ALVW)	.32	.46
LDTs (5,751–8,500 lbs. ALVW)	.39	.56

[59 FR 50074, Sept. 30, 1994, as amended at 61 FR 127, Jan. 3, 1996]

§ 88.105–94 Clean-fuel fleet emission standards for heavy-duty engines.

(a) Exhaust emissions from engines used in heavy-duty low emission vehicles shall meet one of the following standards:

(1) Combined emissions of oxides of nitrogen and nonmethane hydrocarbons (or nonmethane hydrocarbon equivalent) shall not exceed 3.8 grams per brake horsepower-hour.

(2) Combined emissions of oxides of nitrogen and nonmethane hydrocarbons (or nonmethane hydrocarbon equivalent) shall not exceed 3.5 grams per brake horsepower-hour when tested (certified) on fuel meeting the specifications of California certification fuel.

(b) Exhaust emissions from engines used in heavy-duty low emission vehicles shall meet conventional vehicle standards set forth in Part 86 for total hydrocarbon, carbon monoxide, particulate, and organic material hydrocarbon equivalent.

(c) Exhaust emissions from engines used in ultra-low emission heavy-duty vehicles shall meet each of the following standards:

(1) The combined emissions of oxides of nitrogen and nonmethane hydrocarbons (or nonmethane hydrocarbon equivalent) shall not exceed 2.5 grams per brake horsepower-hour.

(2) Carbon monoxide emissions shall not exceed 7.2 grams per brake horsepower-hour.

(3) Particulate emissions shall not exceed 0.05 grams per brake horsepower-hour.

(4) Formaldehyde emissions shall not exceed 0.025 grams per brake horsepower-hour.

(d) Exhaust emissions from engines used in inherently-low emission heavy-duty vehicles shall meet each of the following standards:

(1) The combined emissions of oxides of nitrogen and nonmethane hydrocarbons (or nonmethane hydrocarbon equivalent) shall not exceed 2.5 grams per brake horsepower-hour.

(2) Carbon monoxide emissions shall not exceed 14.4 grams per brake horsepower-hour.

(3) Particulate emissions shall not exceed 0.10 grams per brake horsepower-hour.

(4) Formaldehyde emissions shall not exceed 0.05 grams per brake horsepower-hour.

(e) The standards set forth in paragraphs (a), (b), (c), and (d) of this section refer to the exhaust emitted while the vehicle is being tested in accordance with the applicable test procedures set forth in 40 CFR part 86, subpart N.

(f)(1) A heavy-duty zero-emission vehicle (ZEV) has a standard of zero emissions for nonmethane hydrocarbons, oxides of nitrogen, carbon monoxide, formaldehyde, and particulates.

(2) A heavy-duty vehicle shall be certified as a ZEV if it is determined by engineering analysis that the vehicle satisfies the following conditions:

(i) The vehicle fuel system(s) must not contain either carbon or nitrogen compounds (including air) which, when burned, form nonmethane hydrocarbons, oxides of nitrogen, carbon monoxide, formaldehyde, or particulates as exhaust emissions.

(ii) All primary and auxiliary equipment and engines must have no emissions of nonmethane hydrocarbons, oxides of nitrogen, carbon monoxide, formaldehyde, and particulates.

(iii) The vehicle fuel system(s) and any auxiliary engine(s) must have no evaporative emissions.

(iv) Any auxiliary heater must not operate at ambient temperatures above 40 degrees Fahrenheit.

(g) All heavy-duty engines used in low emission, ultra-low emission, or zero emission vehicles shall also comply with all applicable standards and requirements of 40 CFR part 86, except that any exhaust emission standards in 40 CFR part 86 pertaining to pollutants for which standards are established in this section shall not apply.

[59 FR 50077, Sept. 30, 1994]

Subpart B—California Pilot Test Program

§ 88.201–94 Scope.

Applicability. The requirements of this subpart shall apply to the following:

(a) State Implementation Plan revisions for the State of California and other states pursuant to compliance with section 249 of the Clean Air Act, as amended in 1990.

(b) Vehicle manufacturers with sales in the State of California.

[57 FR 60046, Dec. 17, 1992, as amended at 59 FR 50077, Sept. 30, 1994]

§ 88.202–94 Definitions.

(a) The definitions in subpart A also apply to this subpart.

(b) The definitions in this subpart shall apply beginning with the 1992 model year.

Averaging for clean-fuel vehicles means the sale of clean-fuel vehicles that meet more stringent standards than required, which allows the manufacturer to sell fewer clean-fuel vehicles than would otherwise be required.

Banking means the retention of credits, by the manufacturer generating the emissions credits, for use in future model-year certification as permitted by regulation.

Sales means vehicles that are produced, sold, and distributed (in accordance with normal business practices and applicable franchise agreements) in the State of California, including owners of covered fleets under subpart C of part 86 of this chapter. The manufacturer can choose at their option from one of the following three methods for determining sales:

(i) Sales is defined as sales to the ultimate purchaser.

(ii) Sales is defined as vehicle sales by a manufacturer to a dealer, distributer, fleet operator, broker, or any other entity which comprises the first point of sale.

(iii) Sales is defined as equivalent to the production of vehicles for the state of California. This option can be revoked if it is determined that the production and actual sales numbers do not exhibit a functional equivalence per the language of § 86.708–94(b)(1) of this chapter.

Trading means the exchange of credits between manufacturers.

§ 88.203–94 Abbreviations.

The abbreviations in subpart A of this part and in 40 CFR part 86 apply to this subpart.

§ 88.204–94 Sales requirements for the California Pilot Test Program.

(a) The total annual required minimum sales volume of new clean fuel vehicles in California for this program shall correspond to Table B204.

(b) (1) When manufacturers of vehicles subject to the regulations of this section file a report pursuant to 40 CFR

86.085–37(b), such report shall include the following information: the number of light-duty vehicles and light-duty trucks sold only in California, and the number of clean-fuel vehicles sold for the Pilot program beginning with model year 1996.

(2) For model years 1996 and 1997, manufacturers may exclude heavy light-duty trucks from the reporting required by this section.

(c) (1) Except as provided in paragraph (d) of this section, each vehicle manufacturer must sell clean-fuel vehicles in California in an amount equal to the required annual sales volume calculated in paragraph (c)(2) of this section.

(2) The required annual clean fuel vehicle sales volume for a given manufacturer is expressed in the following equation rounded to the nearest whole number:

$$\mathrm{RMS} = \frac{\mathrm{MS}}{\mathrm{TS}} \times \mathrm{TCPPS}$$

Where:

RMS=a manufacturer's required sales in a given model year.

MS=the average of a manufacturer's total LDV and light LDT sales in California three and four model years earlier than year in question (for MY 1996 and 1997 RMS calculations).

=the average of a manufacturer's total LDV and LDT sales in California three and four model years earlier than year in question (for MY 1998 and later RMS calculations).

TS=the average of total LDV and light LDT sales in California of all manufacturers three and four model years earlier than the year in question (for MY 1996 and 1997 RMS calculations). Sales of manufacturers which meet the criteria of (d) of this paragraph will not be included.

=the average of total LDV and LDT sales in California of all manufacturers three and four model years earlier than the year in question (for MY 1998 and later RMS calculations). Sales of manufacturers which meet the criteria of (d) of this paragraph will not be included.

TCPPS=Pilot program annual CFV sales requirement (either 150,000 or 300,000) for the model year in question.

(i) A manufacturer's share of required annual sales for model years 1996 and 1997 will be based on LDV and light LDT sales only. Once the heavy LDT standards are effective beginning with model year 1998, a manufacturer's required sales share will be based on all LDV and LDT sales.

(ii) A manufacturer certifying for the first time in California shall calculate annual required sales share based on projected California sales for the model year in question. In the second year, the manufacturer shall use actual sales from the previous year. In the third year, the manufacturer will use sales from two model years prior to the year in question. In the fourth year, the manufacturer will use sales from three years prior to the year in question. In the fifth year and subsequent years, the manufacturer will use average sales from three and four years prior to the year in question.

(d) (1) Small volume manufacturer is defined in the Pilot program as one whose average annual LDV and LDT sales in California are less than or equal to 3,000 units during a consecutive three-year period beginning no earlier than model year 1993.

(i) A manufacturer with less than three consecutive years of sales in California shall use a single year of sales or, if available, the average of two years of sales in California to determine whether they fall at or below the threshold of 3,000 units.

(ii) A manufacturer certifying for the first time in California shall be considered a small volume manufacturer if their projected California sales level is at or below 3,000 units for a given year. Once the manufacturer has actual sales data for one year, this actual sales data shall be used to determine whether the manufacturer qualifies as a small volume manufacturer.

(iii) A manufacturer which does not qualify as a small volume manufacturer in model year 1996 but whose average annual LDV and LDT sales fall to or below the 3,000 unit threshold between 1996 and 2001 shall be treated as a small volume manufacturer and shall be subject to requirements for small volume manufacturers as specified in paragraph (d)(2) of this section beginning with the next model year.

(2) A manufacturer which qualifies as a small volume manufacturer prior to model year 2001 is not required to comply with the sales requirements of this section until model year 2001.

TABLE B204.—PILOT PROGRAM VEHICLE SALES SCHEDULE

Model years	Vehicle types	Required annual sales
1996 and 1997	LDTs (< 6000 GVWR and ≤5750 LVW); and LDVs.	150,000
1998	All Applicable Vehicle Types	150,000
1999+	All Applicable Vehicle Types	300,000

[59 FR 50078, Sept. 30, 1994, as amended at 61 FR 127, Jan. 3, 1996]

§ 88.205–94 California Pilot Test Program Credits Program.

(a) *General.* (1) The Administrator shall administer this credit program to enable vehicle manufacturers who are required to participate in the California Pilot Test Program to meet the clean-fuel vehicle sales requirements through the use of credits. Participation in this credit program is voluntary.

(2) All credit-generating vehicles must meet the applicable emission standards and other requirements contained in subpart A of this part.

(b) *Credit generation.* (1) Credits may be generated by any of the following means:

(i) Sale of qualifying clean-fuel vehicles earlier than required. Manufacturers may earn these credits starting with the 1992 model year, contingent upon the requirements of paragraph (g) of this section.

(ii) Sale of a greater number of qualifying clean-fuel vehicles than required.

(iii) Sale of qualifying clean-fuel vehicles that meet more stringent emission standards than those required.

(2) For light-duty vehicles and light-duty trucks, credit values shall be determined in accordance with the following:

(i) For model-years through 2000, credit values shall be determined in accordance with table B–1 of this subpart.

(ii) For the 2001 and subsequent model-years, credit values shall be determined according to table B–2 of this subpart. The sale of light-duty vehicles classified as Transitional Low-Emission Vehicles shall not receive credits starting in model year 2001.

(iii) For the calculation of credits for the sale of more clean-fuel vehicles than required, the manufacturer shall designate which sold vehicles count toward compliance with the sales requirement. The remaining balance of vehicles will be considered as sold beyond the sales requirement for credit calculations.

(3) Vehicles greater than 8500 lbs gvwr may not generate credits.

(c) *Credit use.* (1) All credits generated in accordance with these provisions may be freely averaged, traded, or banked for later use. Credits may not be used to remedy any nonconformity determined by enforcement testing.

(2) There is one averaging and trading group containing all light-duty vehicles and light-duty trucks.

(3) A vehicle manufacturer desiring to demonstrate full or partial compliance with the sales requirements by the redemption of credits, shall surrender sufficient credits, as established in this paragraph (c). In lieu of selling a clean-fuel vehicle, a manufacturer shall surrender credits equal to the credit value for the corresponding vehicle class and model year found in table B–1.3 or table B–2.3 of this subpart.

(d) *Participation in the credit program.* (1) During certification, the manufacturer shall calculate the projected credits, if any, based on required sales projections.

(2) Based on information from paragraph (d)(1) of this section, each manufacturer's certification application under this section must demonstrate:

(i) That at the end of the model-year production, there is a net vehicle credit balance of zero or more with any credits obtained from averaging, trading, or banking.

(ii) It is recommended but not required that the source of the credits to be used to comply with the minimum sales requirements be stated. All such reports should include all credits involved in averaging, trading, or banking.

(3) During the model year, manufacturers must:

(i) Monitor projected versus actual production to be certain that compliance with the sales requirement is achieved at the end of the model year.

(ii) Provide the end of model year reports required under this subpart.

(iii) Maintain the records required under this subpart.

(4) Projected credits based on information supplied in the certification application may be used to obtain a certificate of conformity. However, any such credits may be revoked based on review of end-of-model year reports, follow-up audits, and any other verification steps deemed appropriate by the Administrator.

(5) Compliance under averaging, banking, and trading will be determined at the end of the model year.

(6) If EPA or the manufacturer determines that a reporting error occurred on an end-of-year report previously submitted to EPA under this section, the manufacturer's credits and credit calculations will be recalculated.

(i) If EPA review of a manufacturer's end-of-year report indicates an inadvertent credit shortfall, the manufacturer will be permitted to purchase the necessary credits to bring the credit balance to zero.

(ii) If within 90 days of receipt of the manufacturer's end-of-year report, EPA review determines a reporting error in the manufacturer's favor (i.e., resulting in a positive credit balance) or if the manufacturer discovers such an error within 90 days of EPA receipt of the end-of-year report, the credits will be restored for use by the manufacturer.

(e) *Averaging.* Averaging will only be allowed between clean-fuel vehicles under 8500 lbs gvwr.

(f) *Banking.* (1) *Credit deposits.* (i) Under this program, credits can be banked starting in the 1992 model year.

(ii) A manufacturer may bank credits only after the end of the model year and after EPA has reviewed its end-of-year report. During the model year and before submittal of the end-of-year report, credits originally designated in the certification process for banking will be considered reserved and may be redesignated for trading or averaging.

(2) *Credit withdraws.* (i) After being generated, banked/reserved credits shall be available for use and shall maintain their original value for an infinite period of time.

(ii) A manufacturer withdrawing banked credits shall indicate so during certification and in its credit reports.

(3) Banked credits may be used in averaging, trading, or in any combination thereof, during the certification period. Credits declared for banking from the previous model year but unreviewed by EPA may also be used. However, they may be revoked at a later time following EPA review of the end-of-year report or any subsequent audit actions.

(g) *Early credits.* Beginning in model year 1992 appropriate credits, as determined from the given credit table, will be given for the sale of vehicles certified to the clean-fuel vehicle standards for TLEVs, LEVs, ULEVs, and ZEVs, where appropriate. For LDVs and light LDTs (<6000 lbs GVWR), early credits can be earned from model year 1992 to the beginning of the Pilot Program sales requirements in 1996. For heavy LDTs (>6000 lbs GVWR), early credits can be earned from model years 1992 through 1997. The actual calculation of early credits shall not begin until model year 1996.

[57 FR 60046, Dec. 17, 1992, as amended at 61 FR 127, Jan. 3, 1996]

§ 88.206–94 State Opt-in for the California Pilot Test Program.

(a) A state may opt into the Pilot program if it contains all or part of an ozone nonattainment area classified as serious, severe, or extreme under subpart D of Title I.

(b) A state may opt into the program by submitting SIP revisions that meet the requirements of this section.

(c) For a state that chooses to opt in, SIP provisions can not take effect until one year after the state has provided notice to of such provisions to motor vehicle manufacturers and fuel suppliers.

(d) A state that chooses to opt into the program can not require a sales or production mandate for CFVs or clean alternative fuels. States may not subject fuel or vehicle suppliers to penalties or sanctions for failing to produce or sell CFVs or clean alternative fuels.

(e) (1) A state's SIP may include incentives for the sale or use in such state of CFVs required in California by the Clean Fuel Fleet Program, and the use of clean alternative fuels required to be made available in California by the California Pilot Program.

(2) Incentives may include:

(i) A registration fee on non-CFVs of at least 1 percent of the total cost of the vehicle. These fees shall be used to:

(A) Provide financial incentives to purchasers of CFVs and vehicle dealers who sell high volumes or high percentages of CFVs.

(B) Defray administrative costs of the incentive program.

(ii) Exemptions for CFVs from high occupancy vehicle or trip reduction requirements.

(iii) Preferences for CFVs in the use of existing parking places.

[59 FR 50078, Sept. 30, 1994]

TABLES TO SUBPART B OF PART 88

TABLE B–1.—CREDIT TABLE FOR PHASE I VEHICLE EQUIVALENTS FOR LIGHT-DUTY VEHICLES AND LIGHT-DUTY TRUCKS

TABLE B–1.1.—CREDIT GENERATION: SELLING MORE CLEAN-FUEL VEHICLES THAN REQUIRED

[Phase I: Effective Through 2000 Model-Year]

Vehicle emission category	LDV & LDT ≤6000 gvwr ≤3750 lvw	LDT ≤6000 gvwr >3750 lvw ≤5750 lvw	LDT >6000 gvwr ≤3750 alvw	LDT >6000 gvwr >3750 alvw ≤5750 alvw	LDT >6000 gvwr >5750 alvw
TLEV	1.00	1.28	(1)	(1)	(1)
LEV	1.40	1.76	1.00	1.28	1.56
ULEV	1.68	2.16	1.40	1.76	2.18
ZEV	2.00	2.56	2.00	2.56	3.12

TABLE B–1.2.—CREDIT GENERATION: SELLING MORE STRINGENT CLEAN FUEL VEHICLES

Vehicle emission category	LDV & LDT ≤6000 gvwr ≤3750 lvw	LDT ≤6000 gvwr >3750 lvw ≤5750 lvw	LDT >6000 gvwr ≤3750 alvw	LDT >6000 gvwr >3750 alvw ≤5750 alvw	LDT ≤6000 gvwr >5750 alvw
TLEV	0.00	0.00	(1)	(1)	(1)
LEV	.40	.48	0.00	0.00	0.00
ULEV	.68	.88	.40	.48	.62
ZEV	1.00	1.28	1.00	1.28	1.56

TABLE B–1.3.—CREDIT NEEDED IN LIEU OF SELLING CLEAN-FUEL VEHICLE

Vehicle emission category	LDV & LDT ≤6000 gvwr ≤3750 lvw	LDT ≤6000 gvwr >3750 lvw ≤5750 lvw	LDT >6000 gvwr ≤3750 alvw	LDT >6000 gvwr >3750 alvw ≤5750 alvw	LDT >6000 gvwr >5750 alvw
TLEV	1.00	1.28	(1)	(1)	(1)
LEV	.....	.....	1.00	1.28	1.56

[1] There is no TLEV category for this vehicle class.

TABLE B–2.—CREDIT TABLE FOR PHASE II: VEHICLE EQUIVALENTS FOR LIGHT-DUTY VEHICLES AND LIGHT-DUTY TRUCKS

TABLE B–2.1.—CREDIT GENERATION: SELLING MORE CLEAN-FUEL VEHICLES THAN REQUIRED

[Phase II: effective 2001 and subsequent model-years]

Vehicle emission category	LDV & LDT ≤6000 gvwr ≤3750 lvw	LDT ≤6000 gvwr >3750 lvw ≤5750 lvw	LDT >6000 gvwr ≤3750 alvw	LDT >6000 gvwr >3750 alvw ≤5750 alvw	LDT >6000 gvwr >5750 alvw
LEV	1.00	1.26	0.71	0.91	1.11
ULEV	1.20	1.54	1.00	1.26	1.56
ZEV	1.43	1.83	1.43	1.83	2.23

TABLE B–2.2.—CREDIT GENERATION: SELLING MORE STRINGENT CLEAN-FUEL VEHICLES

Vehicle emission category	LDV & LDT ≤6000 gvwr ≤3750 lvw	LDT ≤6000 gvwr >3750 lvw ≤5750 lvw	LDT >6000 gvwr ≤3750 alvw	LDT >6000 gvwr >3750 alvw ≤5750 alvw	LDT >6000 gvwr >5750 alvw
LEV	0.00	0.00	0.00	0.00	0.00
ULEV	.20	.28	.29	.34	.45
ZEV	.43	.57	.71	.91	1.11

TABLE B–2.3.—CREDIT NEEDED IN LIEU OF SELLING CLEAN-FUEL VEHICLES

Vehicle emission category	LDV & LDT ≤6000 gvwr ≤3750 lvw	LDT ≤6000 gvwr >3750 lvw ≤5750 lvw	LDT >6000 gvwr ≤3750 alvw	LDT >6000 gvwr >3750 alvw ≤5750 alvw	LDT >6000 gvwr >5750 alvw
LEV	1.00	1.26	0.71	0.91	1.11

[59 FR 50079, Sept. 30, 1994]

Subpart C—Clean-Fuel Fleet Program

SOURCE: 58 FR 11901, Mar. 1, 1993, unless otherwise noted.

§88.301–93 General applicability.

(a) The requirements of this subpart apply to the following:

(1) State Implementation Plan revisions at 40 CFR part 52 made pursuant to sections 110 and 246 of the CAA (42 U.S.C. 7410 and 7586) hereafter referred to as the ''SIP revision''.

(2) All agencies, departments and instrumentalities of the United States that are subject to the fleet programs established by a state's SIP revision.

(b) The requirements of §§88.302–93, 88.303–93, 88.311–93, 88.312–93, and 88.313–93 of this part apply to fleets which voluntarily purchase and operate Inherently Low-Emission Vehicles (ILEVs).

§88.302–93 Definitions.

The definitions in 40 CFR part 86 of this chapter also apply to this subpart. The definitions in this section apply to this subpart.

Combination heavy-duty vehicle means a vehicle with a GVWR greater than 8,500 pounds (3,900 kilograms) which is comprised of a truck-tractor and one or more pieces of trailered equipment. The truck-tractor is a self-propelled motor vehicle built on one chassis which encompasses the engine, passenger compartment, and a means of coupling to a cargo carrying trailer(s). The truck-tractor itself is not designed to carry cargo.

Inherently Low-Emission Vehicle means any LDV or LDT conforming to the applicable Inherently Low-Emission Vehicle standard, or any HDV with an engine conforming to the applicable Inherently Low-Emission Vehicle standard. No dual-fuel or flexible-fuel vehicles shall be considered Inherently Low-Emission Vehicles unless they are certified to the applicable standard(s) on all fuel types for which they are designed to operate.

Partially-Covered Fleet pertains to a vehicle fleet in a covered area which contains both covered fleet vehicles and non-covered fleet vehicles, i.e., exempt from covered fleet purchase requirements.

Single-unit heavy-duty vehicle means a self-propelled motor vehicle with a GVWR greater than 8,500 pounds (3,900 kilograms) built on one chassis which encompasses the engine, passenger compartment, and cargo carrying function, and not coupled to trailered equipment. All buses, whether or not they are articulated, are considered single-unit vehicles.

§88.302–94 Definitions.

The definitions in §88.302–93 and 40 CFR part 86 also apply to this part. All terms used in this part, but not defined in this section or in §88.302–93 and 40 CFR part 86 shall have the meaning assigned to them in the Clean Air Act.

Can be centrally fueled means the sum of those vehicles that are centrally fueled and those vehicles that are capable of being centrally fueled.

(1) *Capable of being centrally fueled* means a fleet, or that part of a fleet, consisting of vehicles that could be refueled 100 percent of the time at a location that is owned, operated, or controlled by the covered fleet operator, or is under contract with the covered fleet operator. The fact that one or more vehicles in a fleet is/are not capable of being centrally fueled does not exempt an entire fleet from the program.

(2) *Centrally fueled* means a fleet, or that part of a fleet, consisting of vehicles that are fueled 100 percent of the time at a location that is owned, operated, or controlled by the covered fleet operator, or is under contract with the covered fleet operator. Any vehicle that is under normal operations garaged at home at night but that is, in fact, centrally fueled 100 percent of the time shall be considered to be centrally fueled for the purpose of this definition. The fact that one or more vehicles in a fleet is/are not centrally fueled does not exempt an entire fleet from the program. The fact that a vehicle is not centrally fueled does not mean it could not be centrally fueled in accordance with the definition of ''capable of being centrally fueled.''

(3) *Location* means any building, structure, facility, or installation which; is owned or operated by a person, or is under the control of a person; is located on one or more contiguous properties and contains or could contain a fueling pump or pumps for the use of the vehicles owned or controlled by that person.

Clean-fuel vehicle aftermarket conversion certifier means the business or entity that obtains a certificate of conformity with the clean-fuel vehicle standards and requirements for a vehicle/engine conversion configuration pursuant to the requirements of 40 CFR part 86 and this part 88.

Control means: (1) When it is used to join all entities under common management, means any one or a combination of the following:

(i) A third person or firm has equity ownership of 51 percent or more in each of two or more firms;

(ii) Two or more firms have common corporate officers, in whole or in substantial part, who are responsible for the day-to-day operation of the companies.

(iii) One firm leases, operates, supervises, or in 51 percent or greater part owns equipment and/or facilities used by another person or firm, or has equity ownership of 51 percent or more of another firm.

(2) When it is used to refer to the management of vehicles, means a person has the authority to decide who can operate a particular vehicle, and the purposes for which the vehicle can be operated.

(3) When it is used to refer to the management of people, means a person has the authority to direct the activities of another person or employee in a precise situation, such as at the workplace.

Conversion configuration means any combination of vehicle/engine conversion hardware and a base vehicle of a specific engine family.

Covered fleet operator means a person who operates a fleet of at least ten covered fleet vehicles (as defined in section 241(6) of the Act) and that fleet is operated in a single covered area (even if the covered fleet vehicles are garaged outside of it). For purposes of this definition, the vehicle types described in the definition of *covered fleet* (section 241(5) of the Act) as exempt from the program will not be counted toward the ten-vehicle criterion.

Dealer demonstration vehicle means any vehicle that is operated by a motor vehicle dealer (as defined in section 216(4) of the Act) solely for the purpose of promoting motor vehicle sales, either on the sales lot or through other marketing or sales promotions, or for permitting potential purchasers to drive the vehicle for pre-purchase or pre-lease evaluation.

Emergency vehicle means any vehicle that is legally authorized by a governmental authority to exceed the speed limit to transport people and equipment to and from situations in which speed is required to save lives or property, such as a rescue vehicle, fire truck, or ambulance.

Law enforcement vehicle means any vehicle which is primarily operated by

a civilian or military police officer or sheriff, or by personnel of the Federal Bureau of Investigation, the Drug Enforcement Administration, or other agencies of the federal government, or by state highway patrols, municipal law enforcement, or other similar law enforcement agencies, and which is used for the purpose of law enforcement activities including, but not limited to, chase, apprehension, surveillance, or patrol of people engaged in or potentially engaged in unlawful activities. For federal law enforcement vehicles, the definition contained in Executive Order 12759, Section 11: Alternative Fueled Vehicle for the Federal Fleet, Guidance Document for Federal Agencies, shall apply.

Model year, as it applies to the clean fuel vehicle fleet purchase requirements, means September 1 through August 31.

Motor vehicles held for lease or rental to the general public means a vehicle that is owned or controlled primarily for the purpose of short-term rental or extended-term leasing (with or without maintenance), without a driver, pursuant to a contract.

New covered fleet vehicle means a vehicle that has not been previously controlled by the current purchaser, regardless of the model year, except as follows: Vehicles that were manufactured before the start of the fleet program for such vehicle's weight class, vehicles transferred due to the purchase of a company not previously controlled by the purchaser or due to a consolidation of business operations, vehicles transferred as part of an employee transfer, or vehicles transferred for seasonal requirements (i.e., for less than 120 days) are not considered new. States are permitted to discontinue the use of the fourth exception for fleet operators who abuse the discretion afforded them. This definition of new covered fleet vehicle is distinct from the definition of new vehicle as it applies to manufacturer certification, including the certification of vehicles to the clean fuel standards.

Owned or operated, leased or otherwise controlled by such person means either of the following:

(1) Such person holds the beneficial title to such vehicle; or

(2) Such person uses the vehicle for transportation purposes pursuant to a contract or similar arrangement, the term of such contract or similar arrangement is for a period of 120 days or more, and such person has control over the vehicle pursuant to the definition of control of this section.

Person includes an individual, corporation, partnership, association, State, municipality, political subdivision of a State, and any agency, department, or instrumentality of the United States and any officer, agent, or employee thereof.

Under normal circumstances garaged at personal residence means a vehicle that, when it is not in use, is normally parked at the personal residence of the individual who usually operates it, rather than at a central refueling, maintenance, and/or business location. Such vehicles are not considered to be capable of being central fueled (as defined in this subpart) and are exempt from the program unless they are, in fact, centrally fueled.

Vehicle used for motor vehicle manufacturer product evaluations and tests means a vehicle that is owned and operated by a motor vehicle manufacturer (as defined in section 216(1) of the Act), or motor vehicle component manufacturer, or owned or held by a university research department, independent testing laboratory, or other such evaluation facility, solely for the purpose of evaluating the performance of such vehicle for engineering, research and development, or quality control reasons.

[58 FR 64691, Dec. 9, 1993, as amended at 59 FR 50080, Sept. 30, 1994]

§ 88.303–93 Abbreviations.

The abbreviations in subpart A of this part and in 40 CFR part 86 apply to this subpart. The abbreviations in this section apply to this subpart.

ILEV—Inherently Low-Emission Vehicle.

§ 88.304–94 Clean-fuel fleet vehicle credit program.

(a) *General.* (1) The SIP revision shall provide for a CFFV credit program to enable covered fleet owners/operators

to meet the fleet vehicle purchase requirements of the CAA both by purchasing clean-fuel vehicles (CFVs) directly and by trading and banking CFFV credits for vehicle purchases.

(2) All credit-generating vehicles must meet the applicable emission standards and other requirements contained in 40 CFR part 88, subpart A.

(b) *Program administration.* (1)(i) Each state in which there is all or part of a covered area, as defined in CAA section 246(a)(2), shall promulgate regulations as necessary for implementing this requirement.

(ii) The state shall submit a SIP revision before May 15, 1994 to the Administrator stipulating the specific mechanism by which the CFFV program is to be administered and enforced. The credit program shall commence upon EPA approval of the SIP in accordance with CAA section 246(f)(5).

(2) A fleet owner who purchases/leases a CFFV only to generate CFFV credit shall be subject to the same requirements of the state's CFFV program as a covered fleet owner who purchases/leases a CFFV to demonstrate compliance with covered fleet purchase requirements.

(3) While in the covered area, a dual-fuel/flexible-fuel vehicle which a fleet owner purchases to comply with covered fleet purchase requirements must be operated at all times on the fuel(s) on which it was certified as a CFFV. If the fleet owner receives credit for a dual-fuel/flexible-fuel vehicle purchase, the vehicle must be operated at the same emission level for which the vehicle generated CFFV credit.

(c) *Credit generation.* (1) States shall grant CFFV credits to a covered fleet owner for any of the following qualifying CFFV purchases:

(i) Purchase of a CFFV during any period subsequent to the approval of the SIP revision but prior to the effective date for commencement of a state's CFFV purchase requirement if the purchase meets all other CFFV requirements applicable to such purchases, including the statutory requirement to use only the fuel on which the vehicle was certified as a CFFV;

(ii) Purchase of a greater number of CFFVs than is required under the SIP revision;

(iii) Purchase of a CFFV which meets more stringent emission standards than required under the SIP revision; or

(iv) Purchase of a CFFV in an exempt or non-covered vehicle category by the owner/operator of a covered or partially-covered fleet.

(2) A state may retroactively grant CFFV credit(s) to a fleet owner for the purchase of a CFFV prior to the approval of the state's SIP revision if the purchase met all CFFV credit program requirements applicable to such purchases, including:

(i) The vehicle purchased would have to have been certified to CFFV emission standards;

(ii) The vehicle purchased would have to have been a dedicated-fuel vehicle;

(iii) If the vehicle purchased was not a dedicated-fuel vehicle, then the fleet owner would have to show that the vehicle had been operated only on the clean alternative fuel on which the vehicle had been certified as a CFFV.

(3) For LDVs and LDTs, credit values shall be determined in accordance with Table C94–1. The state shall use Table C94–1 exclusively in determining LDV and LDT CFFV credit values. Table C94–1.1 applies to paragraphs (c)(1) (i), (ii) and (iv) of this section; Table C94–1.2 applies to paragraph (c)(1)(iii) of this section.

(4) In lieu of determining credit values in accordance with Table C94–1, a state may specify in its SIP revision that Table C94–2 will be used to determine LDV and LDT CFFV credit values in one or more affected nonattainment areas. Any state choosing to do so must provide adequate justification, based on air quality benefits, at the time the SIP revision is submitted. If the use of Table C94–2 is approved by EPA, the State shall use Table C94–2 exclusively in determining LDV and LDT CFFV credit values for vehicles in the subject area or areas. Table C94–2.1 applies to paragraphs (b)(1) (i), (ii) and (iv) of this section; Table C94–2.2 applies to paragraph (b)(1)(iii) of this section.

(5) In lieu of determining credit values in accordance with Table C94–1, a

state containing a carbon monoxide nonattainment area(s) having a design value above 16.0 parts per million may specify in its SIP revision that Table C94–3 will be used to determine LDV and LDT CFFV credit values in one or more affected nonattainment areas. Any state choosing to do so must provide adequate justification, based on air quality benefits, at the time the SIP revision is submitted. If the use of Table C94–3 is approved by EPA, the state shall use Table C94–3 exclusively in determining LDV and LDT CFFV credit values for vehicles in the subject area or areas. Table C94–3.1 applies to paragraphs (b)(1) (i), (ii) and (iv) of this section; Table C94–3.2 applies to paragraph (b)(1)(iii) of this section.

(6) For HDVs, credit values shall be determined in accordance with Table C94–4. The state shall use Table C94–4 exclusively in determining heavy-duty vehicle CFFV credit values. Table C94–4.1 applies to paragraphs (c)(1) (i), (ii) and (iv) of this section, and Table C94–4.2 applies to paragraph (c)(1)(iii) of this section.

(7) In lieu of determining credit values in accordance with Table C94–4, a state containing a carbon monoxide nonattainment area(s) having a design value above 16 parts per million may specify in its SIP revision that Table C94–5 will be used to determine heavy-duty vehicle CFFV credit values in one or more affected nonattainment areas. Any state choosing to do so must provide adequate justification, based on air quality benefits, at the time the SIP revision is submitted. If the use of Table C94–5 is approved by EPA, the State shall use Table C94–5 exclusively in determining heavy-duty vehicle CFFV credit values for vehicles in the subject area or areas. Table C94–5.1 applies to paragraphs (b)(1) (i), (ii) and (iv) of this section; Table C94–5.2 applies to paragraph (b)(1)(iii) of this section.

(8) Credit values shall be rounded to two decimal places.

(9) *Heavy heavy-duty vehicles.* (i) States must allow purchase of any clean-fuel single-unit or combination HDV with a GVWR greater than 26,000 pounds (11,800 kilograms) to generate CFFV credit for the fleet vehicle purchaser.

(ii) States must exclude from generating CFFV credit the purchase of any combination HDV with a GVWR greater than 26,000 pounds (11,800 kilograms) which pays all or a portion of its fuel taxes, as evidenced by fuel tax stickers on the combination HDV, to a state(s) which is not part of that covered nonattainment area.

(10) *Light-duty CFFV credits.* Credits generated by the purchase of a qualifying clean-fuel fleet LDV or a LDT shall be designated at the time of issuance as light-duty CFFV credits.

(11) *Heavy-duty CFFV credits.* Credits generated by the purchase of a qualifying clean-fuel fleet HDV shall be designated at the time of issuance as heavy-duty CFFV credits. Further, credits generated by the purchase of a light heavy-duty or a medium heavy-duty qualifying CFFV shall be designated at the time of issuance as light heavy-duty and medium heavy-duty CFFV credits, respectively.

(d) *Credit use.* (1) All credits generated in accordance with these provisions may be freely traded or banked for later use, subject to the provisions contained in this subpart, without discount or depreciation of such credits.

(2) A covered fleet owner or operator desiring to demonstrate full or partial compliance with covered fleet purchase requirements by the redemption of credits shall surrender sufficient credits as established in this paragraph. In lieu of purchasing a CFFV, a fleet owner or operator shall surrender credits equal to the credit value for the corresponding vehicle class and credit calculation method used in that area from either Table C94–1.3, C94–2.3, C94–3.3, C94–4.3, or C94–5.3 of this subpart.

(3) Credits earned within the boundaries of a covered nonattainment area may be traded within those boundaries whether or not that area encompasses parts of more than one state.

(4) Credits issued as a result of CFFV purchase requirements in one nonattainment area may not be used to demonstrate compliance in another nonattainment area, even if a state contains more than one covered nonattainment area.

(5) Credit allocation. (i) Credits generated by the purchase of LDVs and LDTs of 8,500 pounds (3,900 kilograms)

GVWR or less may be used to demonstrate compliance with covered fleet purchase requirements applicable to LDVs or LDTs of 8,500 pounds (3,900 kilograms) GVWR or less.

(ii) Credits generated by the purchase of vehicles of more than 8,500 pounds (3,900 kilograms) GVWR may not be used to demonstrate compliance with the covered fleet purchase requirements for vehicles weighing 8,500 pounds (3,900 kilograms) GVWR or less.

(iii) Credits generated by the purchase of vehicles of 8,500 pounds (3,900 kilograms) GVWR or less may not be used to demonstrate compliance with requirements for vehicles of more than 8,500 pounds (3,900 kilograms) GVWR.

(iv) Credits generated by the purchase of a HDV of a particular weight subclass may be used to demonstrate compliance with required heavy-duty vehicle purchases for the same or lighter weight subclasses. These credits may not be used to demonstrate compliance with required HDV purchases for vehicles of heavier weight subclasses than the weight subclass of the vehicle which generated the credits.

§ 88.305–94 Clean-fuel fleet vehicle labeling requirements for heavy-duty vehicles.

(a) All clean-fuel heavy-duty engines and vehicles used as LEVs, ULEVs, and ZEVs that are also regulated under 40 CFR part 86 shall comply with the labeling requirements of 40 CFR 86.095–35 (or later applicable sections), and shall also include an unconditional statement on the label indicating that the engine or vehicle is a LEV, ULEV, or ZEV, and meets all of the applicable requirements of this part 88.

(b) All heavy-duty clean-fuel fleet vehicles not regulated under 40 CFR part 86 shall have a permanent legible label affixed to the engine or vehicle in a readily visible location, which contains the following information:

(1) The label heading: vehicle emissions classification information (e.g., ''This is a Low Emission Vehicle'');

(2) Full corporate name and trademark of the manufacturer;

(3) A statement that this engine or vehicle meets all applicable requirements of the U.S. Environmental Protection Agency clean-fuel fleet vehicle program, as described in this part 88, but not necessarily those requirements found in 40 CFR part 86.

[59 FR 50080, Sept. 30, 1994]

§ 88.306–94 Requirements for a converted vehicle to qualify as a clean-fuel fleet vehicle.

(a) For purposes of meeting the requirements of section 246 of the Clean Air Act or the SIP revisions, conversions of engines or vehicles which satisfy the requirements of this section shall be treated as a purchase of a clean-fuel vehicle under subpart C of this part.

(b) The engine or vehicle must be converted using a conversion configuration which has been certified according to the provisions of 40 CFR part 86 using applicable emission standards and other provisions from part 88 for clean-fuel engines and vehicles. The following requirements will also apply:

(1) If the installation of the certified conversion configuration is performed by an entity other than aftermarket conversion certifier, the aftermarket conversion certifier shall submit a list of such installers to the Administrator. Additional installers must be added to this list and the revised list submitted to the Administrator within 5 working days from the time they are authorized to perform conversion installations by the clean-fuel vehicle aftermarket conversion certifier.

(2) If the installation of the certified conversion configuration is performed by an entity other than the certificate holder, the certificate holder shall provide instructions for installation of the aftermarket conversion system to installers listed on the certificate, and ensure that the systems are properly installed.

(3) For the purpose of determining whether certification under the Small-Volume Manufacturers Certification Program pursuant to the requirements of 40 CFR 86.094–14 is permitted, the 10,000 sales volume limit in 40 CFR 86.094–14(b)(1) is waived for a certifier of a clean-fuel vehicle aftermarket conversion.

(4) Clean-fuel vehicle aftermarket conversion certifiers that are subject to the post-installation emissions testing requirements in paragraph (c) of

this section and who will satisfy these requirements by using the two speed idle test procedure detailed in paragraph (c)(2)(ii) of this section must conduct the following testing at the time of certification in order to generate the required certification CO emissions reference values. The certification CO emissions reference values generated must be submitted to the Administrator at the time of application for certification.

(i) For dual and flexible fuel vehicles, certification reference values must be generated for each certification test fuel required for exhaust emissions testing pursuant to 40 CFR 86.113 or 40 CFR 86.1313.

(ii) For light-duty vehicles and light-duty trucks the test fuels used during the emissions testing required by paragraph (b)(3) of this section must comply with the fuel specifications for exhaust emissions testing found in 40 CFR 86.113. For heavy-duty engines the test fuels used during the emissions testing required by paragraph (b)(3) of this section must comply with the fuel specifications for exhaust emissions testing found in 40 CFR 86.1313.

(iii) Single, consecutive idle mode and high-speed mode segments of the two speed idle test must be conducted pursuant to the requirements of 40 CFR 85.2215 and as modified by the provisions of paragraph (c)(4)(ii)(D) of this section and this paragraph to determine the required certification CO emission reference values.

(A) The certification CO emission reference value for the idle mode of the test will be the simple average of all emissions measurements taken during an idle mode of 90 seconds duration pursuant to the requirements in 40 CFR 85.2215(a).

(B) The certification CO emission reference value for the high-speed mode of the test will be the simple average of all emissions measurements taken during a high-speed mode of 180 seconds duration pursuant to the requirements in 40 CFR 85.2215(a).

(c) Except as provided in paragraph (c)(1) of this section, each converted vehicle manufactured by a clean-fuel vehicle aftermarket conversion certifier with aggregate sales of less than 10,000 converted vehicles within a given calendar year must satisfy the post-installation emissions testing requirements of paragraph (c)(2) of this section. If a vehicle fails to satisfy the emissions testing requirements such vehicle may not be considered a clean-fuel vehicle until such noncompliance is rectified and compliance is demonstrated.

(1) A clean-fuel vehicle aftermarket conversion certifier with estimated sales of 300 or fewer engines and vehicles in a calendar year and which sells or converts vehicles outside of a nonattainment area (as classified under subpart D of Title I) which has an inspection and maintenance program that includes a test of carbon monoxide emissions may submit a request to the Administrator for an exemption from the post-installation emission test requirements of paragraph (c) of this section. If granted, such an exemption would apply to converted vehicles that have the conversion installation performed outside of a nonattainment area which has an inspection and maintenance program that includes a test of carbon monoxide emissions.

(i) The request for exemption submitted to the Administrator must include the following:

(A) The estimated number of engines and vehicles that will be converted in the calendar year.

(B) Sufficient information to demonstrate that complying with the post-installation emission test requirement represents a severe financial hardship.

(C) A description of any emission related quality control procedures used.

(ii) Within 120 days of receipt of the application for exemption, the Administrator will notify the applicant either that an exemption is granted or that sufficient cause for an exemption has not been demonstrated and that all of the clean-fuel vehicle aftermarket conversion certifier's vehicles are subject to the post-installation test requirement of paragraph (c)(2) of this section.

(iii) If the clean-fuel vehicle aftermarket conversion certifier granted an exemption originally estimates that 300 or fewer conversions would be performed in the calendar year, and then later revises the estimate to more than 300 for the year, the certifier shall

inform the Administrator of such revision. A post-installation emissions test for each conversion performed after the estimate is revised is required pursuant to the requirements of paragraph (c)(2) of this section. The estimated number of conversions from such a clean-fuel vehicle aftermarket conversion certifier must be greater than 300 in the following calendar year.

(2) A clean-fuel vehicle aftermarket conversion certifier with aggregate sales less than 10,000 converted vehicles within a given calendar year shall conduct post-installation emissions testing using either of the following test methods:

(i) The carbon monoxide (CO) emissions of the converted vehicle must be determined in the manner in which CO emissions are determined according to the inspection and maintenance requirements applicable in the area in which the vehicle is converted or is expected to be operated.

(A) For dual-fuel vehicles, a separate test is required for each fuel on which the vehicle is capable of operating. For flexible fuel vehicles, a single test is required on a fuel that falls within the range of fuel mixtures for which the vehicle was designed. The test fuel(s) used must be commercially available.

(B) A converted vehicle shall be considered to meet the requirements of this paragraph if the vehicle's measured exhaust CO concentration(s) is lower than the cutpoint(s) used to determine CO pass/fail under the inspection and maintenance program in the area in which the conversion is expected to be operated.

(1) If CO pass/fail criteria are not available for a vehicle fuel type then pass/fail criteria specific to gasoline use are to be used for vehicles of that fuel type.

(2) [Reserved].

(ii) The carbon monoxide (CO) emissions of the converted vehicle must be determined in the manner specified in the two speed idle test-EPA 91 found in 40 CFR 85.2215. All provisions in the two speed idle test must be observed except as detailed in paragraph (c)(2)(ii)(D) of this section.

(A) For dual and flexible fuel vehicles, a separate test is required for each certification test fuel required for exhaust emissions testing pursuant to 40 CFR 86.113 or 40 CFR 86.1313.

(B) For light-duty vehicles and light-duty trucks the test fuels used during the emissions testing required by paragraph (c)(4) of this section must comply with the fuel specifications for exhaust emissions testing found in 40 CFR 86.113. For heavy-duty engines the test fuels used during the emissions testing required by paragraph (c)(2) of this section must comply with the fuel specifications for exhaust emissions testing found in 40 CFR 86.1313.

(C) A converted vehicle shall be considered to meet the requirements of this paragraph if the following criteria are satisfied:

(1) The vehicle's measured idle mode exhaust CO concentration(s) must be lower than the sum of 0.4 percent CO plus the idle mode certification CO emissions reference value as determined according to the requirements of paragraph (b)(3) of this section.

(2) The vehicle's measured high-speed mode exhaust CO concentration(s) must be lower than the sum of 0.4 percent CO plus the high-speed certification CO emissions reference value as determined according to the requirements of paragraph (b)(3) of this section.

(D) For the purposes of the post-installation emissions testing required by paragraph (c) of this section, the following adjustments to the two speed idle test-EPA 91 in 40 CFR 85.2215 are necessary.

(1) Testing of hydrocarbon emissions and equipment associated solely with hydrocarbon emissions testing is not required.

(2) The CO emissions pass/fail criteria in 40 CFR 85.2215(a)(2), (c)(1)(ii)(A), (c)(2)(ii)(A)(*1*), (c)(2)(iii)(A)(*1*), and (d)(3)(i) are to be replaced with the pass/fail criteria detailed in paragraph (c)(2)(ii)(C) of this section. All HC pass/fail criteria in 40 CFR 85.2215 do not apply.

(3) The void test criteria in 40 CFR 85.2215(a)(3) and (b)(2)(iv) associated with maintaining the measured concentration of CO plus CO^2 above six percent does not apply. However, the Administrator may reconsider requiring that the void test criteria in 40

CFR 85.2215(a)(3) and (b)(2)(iv) be applied, and may issue an advisory memorandum to this effect in the future.

(4) The ambient temperature levels encountered by the vehicle during testing must comply with the specifications in 40 CFR 86.130 or 40 CFR 86.1330.

(d) The clean-fuel vehicle aftermarket conversion certifier shall be considered a manufacturer for purposes of Clean Air Act sections 206 and 207 and related enforcement provisions, and must accept liability for in-use performance of all the vehicles produced under the certificate of conformity as outlined in 40 CFR part 85.

(1) The useful life period for the purposes of determining the in-use liability of the clean-fuel vehicle aftermarket conversion certifier shall be the original useful life of the vehicle prior to conversion.

(2) [Reserved]

(e) *Tampering.* (1) The conversion from an engine or vehicle capable of operating on gasoline or diesel fuel only to a clean-fuel engine or vehicle shall not be considered a violation of the tampering provisions of Clean Air Act section 203(a)(3), if such conversion is done pursuant to a conversion configuration certificate by the aftermarket conversion certifier or by an installer listed on the certificate.

(2) In order to comply with the provisions of this subpart, an aftermarket conversion installer must:

(i) Install a certified aftermarket conversion system for which the installer is listed by the certifier; and

(ii) Perform such installation according to instructions provided by the aftermarket conversion certifier.

(f) *Data collection.* The clean-fuel vehicle aftermarket conversion certifier is responsible for maintaining records of each engine and vehicle converted for use in the Clean Fuel Fleets program for a period of 5 years. The records are to include the engine or vehicle make, engine or vehicle model, engine or vehicle model year, and engine or vehicle identification number of converted engines and vehicles; the certification number of the conversion configuration; the brand names and part numbers of the parts included in the conversion configuration; the date of the conversion and the facility at which the conversion was performed; and the results of post-installation emissions testing if required pursuant to paragraph (c) of this section.

[59 FR 50080, Sept. 30, 1994, as amended at 61 FR 129, Jan. 3, 1996]

§88.307–94 Exemption from temporal transportation control measures for CFFVs.

(a) States with covered areas shall exempt any CFFV required by law to participate in the clean-fuel fleet program or any vehicle generating credits under §88.304–94(c) from transportation control measures (TCMs) existing wholly or partially for air quality reasons included in an approved state implementation plan which restrict vehicle usage based primarily on temporal considerations, such as time-of-day and day-of-week exemptions. However, CFFVs shall not qualify for TCMs where the temporal element is secondary to some other control element and, in no case, shall such exemptions apply if they create a clear and direct safety hazard. This exemption does not include access to high occupancy vehicle (HOV) lanes, except as provided in §88.313–93.

(b) States shall also grant temporal TCM exemptions to qualifying CFFVs being operated after SIP approval, but prior to the effective date for commencement of a state's CFFV credit program.

(c) Temporal TCM exemptions provided for in paragraph (a) of this section are not effective outside of the areas for which states can be required to establish CFFV credit programs.

(1) Such exemptions shall remain effective only while the subject vehicle remains in compliance with applicable CFFV emissions standards and other CFFV credit program requirements.

(2) CFFV TCM exemptions shall not be transferred between vehicles within the same fleet nor shall they be sold or traded.

§88.308–94 Programmatic requirements for clean-fuel fleet vehicles.

Multi-State nonattainment areas. The states comprising a multi-State nonattainment area shall, to the greatest

extent possible, promulgate consistent clean-fuel fleet vehicle programs.

[59 FR 50082, Sept. 30, 1994]

§ 88.309 [Reserved]

§ 88.310–94 Applicability to covered federal fleets.

(a) *Compliance by Federal vehicles.* As per section 258(a) of the Act, fleets owned or operated by any agency, department, or instrumentality of the United States shall comply with the applicable state regulations concerning CFFVs established in the SIP revision. Such fleets shall be treated in the same manner as private or other government fleets under the applicable state regulations.

(1) Federal agencies shall obtain CFFVs from original equipment manufacturers, to the extent possible, as required under section 248 of the CAA.

(2) The Secretary of Defense may exempt any vehicle(s) from the provisions of any CFFV credit program established in the SIP revision by certifying to the Administrator in writing that inclusion of the specified vehicle(s) in such a program could have an adverse impact on the national security. The Secretary of Defense shall also provide a copy of this statement of exemption to the state agency administering the CFFV credit program in the covered area in which the specified vehicle(s) is registered/operated.

(b) [Reserved]

§ 88.311–93 Emissions standards for Inherently Low-Emission Vehicles.

(a) *Certification.* (1) Emissions Testing Procedures. A vehicle shall be certified as an ILEV if that vehicle satisfies the following conditions:

(i) The vehicle shall be certified under the appropriate exhaust emissions standards from paragraph (c) or (d) of this section depending on the vehicle's weight classification.

(ii) The vehicle shall be certified as having fuel vapor emissions which are five or less total grams per test as measured by the current Federal Test Procedure (FTP), modified for ILEV certification, from 40 CFR part 86, subpart B for LDVs and LDTs and from 40 CFR part 86, subpart M for HDVs.

(A) After disabling any and all auxiliary emission control devices (canister, purge system, etc.) related to control of evaporative emissions, the fuel vapor emissions shall be measured using the FTP regulations in effect at the time the vehicle is to be certified as an ILEV. For purposes of this section, the vehicle's fuel vapor emissions shall consist of the total grams of diurnal, hot soak, running loss, and resting loss emissions, as appropriate, for the particular fuel/vehicle/engine combination to be tested. In determining ILEV evaporative emissions, the diurnal emissions measurement procedure shall consist of a single diurnal heat build using an ambient or fuel temperature range of 72°–96 °F (22°–36 °C), as appropriate for the applicable FTP regulations (40 CFR part 86).

(B) Conventional Federal Test Procedure. A vehicle with no evaporative emissions control system components may have its evaporative emissions certified for its particular GVWR weight class/subclass if it passes the conventional evaporative emissions FTP from 40 CFR part 86, subpart B for LDVs and LDTs or from 40 CFR part 86, subpart M for HDVs, as applicable.

(iii) The vehicle must meet other special requirements applicable to conventional or clean-fuel vehicles and their fuels as described in any other parts of this chapter, including 40 CFR parts 86 and 88.

(2) Vehicles which have a closed or sealed fuel system may be certified at the administrator's option by engineering evaluation in lieu of testing. These vehicles will be certified as ILEVs only if a leak in the fuel system would result in the vehicle becoming inoperative due to loss of fuel supply, or if half the fuel escapes within 24 hours.

(b) *Identification.* In the application for a vehicle's certification as an ILEV, the manufacturer or the manufacturer's agent shall provide for positive identification of the vehicle's status as an ILEV in the vehicle's Vehicle Emission Control Information (VECI) label in accordance with 40 CFR 86.094–35 and 86.095–35. The label shall contain a highlighted statement (e.g., underscored or boldface letters) that the vehicle is certified to applicable emission

standards for ILEV exhaust and evaporative emission standards.

(c) *Light-duty vehicles and light-duty trucks.* ILEVs in LDV and LDT classes shall have exhaust emissions which do not exceed the LEV exhaust emission standards for NMOG, CO, HCHO, and PM and the ULEV exhaust emission standards for NO_x listed in Tables A104–1 through A104–6 for light-duty CFVs. Exhaust emissions shall be measured in accordance with the test procedures specified in §88.104–94(k). An ILEV must be able to operate on only one fuel, or must be certified as an ILEV on all fuels on which it can operate. These vehicles shall also comply with all requirements of 40 CFR part 86 which are applicable to conventional gasoline-fueled, methanol-fueled, diesel-fueled, natural gas-fueled or liquified petroleum gas-fueled LDVs/LDTs of the same vehicle class and model year.

(d) *Heavy-duty vehicles.* ILEVs in the HDV class shall have exhaust emissions which do not exceed the exhaust emission standards in grams per brake horsepower-hour listed in §88.105–94(d). Exhaust emissions shall be measured in accordance with the test procedures specified in §88.105–94(e). An ILEV must be able to operate on only one fuel, or must be certified as an ILEV on all fuels on which it can operate. These vehicles shall also comply with all requirements of 40 CFR part 86 which are applicable in the case of conventional gasoline-fueled, methanol-fueled, diesel-fueled, natural gas-fueled or liquified petroleum gas-fueled HDVs of the same weight class and model year.

(e) *Applicability.* State actions to opt out of the clean-fuel fleet program under section 182(c) of the Act do not affect the applicability of the ILEV program in the affected states.

[57 FR 60046, Dec. 17, 1992, as amended at 59 FR 48536, Sept. 21, 1994; 59 FR 50082, Sept. 30, 1994, 61 FR 127, Jan. 3, 1996]

§88.311–98 Emissions standards for Inherently Low-Emission Vehicles.

Section 88.311–98 includes text that specifies requirements that differ from §88.311–93. Where a paragraph in §88.311–93 is identical and applicable to §88.311–98, this may be indicated by specifying the corresponding paragraph and the statement ''[Reserved]. For guidance see §88.311–93.''

(a) heading through (a)(1)(ii) [Reserved]. For guidance see §88.311–93.

(iii) The vehicle must meet other special requirements applicable to conventional or clean-fuel vehicles and their fuels as described in any other regulations in 40 CFR chapter I, subchapter C, including 40 CFR parts 86 and 88 (e.g., onboard refueling provisions).

(b) through (e) [Reserved]. For guidance see §88.311–93.

[59 FR 16309, Apr. 6, 1994]

EFFECTIVE DATE NOTE: The new information collection requirements for §88.311–98 published in the FEDERAL REGISTER at 59 FR 16309, Apr. 6, 1994, which apply to 1998 and later model year vehicles, have not been approved by the Office of Management and Budget (OMB) and are not effective. The Environmental Protection Agency will publish a document once OMB approves the information collection requirements.

§88.312–93 Inherently Low-Emission Vehicle labeling.

(a) *Label design.* (1) Label design shall consist of either of the following specifications:

(i) The label shall consist of a white rectangular background, approximately 12 inches (30 centimeters) high by 18 inches (45 centimeters) wide, with ''CLEAN AIR VEHICLE'' printed in contrasting block capital letters at least 4.3 inches (10.6 centimeters) tall and 1.8 inches (4.4 centimeters) wide with a stroke width not less than 0.5 inches (1.3 centimeters). In addition, the words ''INHERENTLY LOW-EMISSION VEHICLE'' must be present in lettering no smaller than 1 inch (2.5 centimeters) high. Nothing shall be added to the label which impairs readability. Labels shall include a serialized identification number; or

(ii) The label shall consist of a white truncated-circular background, approximately 10 inches (25 centimeters) in diameter by 7 inches (17.5 centimeters) in height. The bottom edge of the truncated-circular background shall be approximately 2 inches (5 centimeters) from the center. The acronym ''ILEV'' shall be printed on the label in contrasting block capital letters at least 2 inches (5 centimeters) tall and 1.5 inches (3.8 centimeters) wide with a stroke width not less than

0.4 inches (1.0 centimeter). In addition, the words ''CLEAN AIR VEHICLE'' must be present in lettering no smaller than 0.8 inches (2.0 centimeters) high. Nothing shall be added to the label which impairs readability. Labels shall include a serialized identification number.

(2) The ILEV label shall be fabricated or affixed to a vehicle in such a manner that its removal from the vehicle cannot be accomplished without defacing or destroying the label in whole or in part.

(3) Along with the manufacturer's application to certify a particular ILEV engine class, the manufacturer or the manufacturer's agent shall submit to EPA ILEV labels or reasonable facsimiles of the types which may be mounted on a certified ILEV vehicle of that class.

(b) *Eligibility*. Vehicle manufacturers or their agents must install ILEV labels on a certified ILEV vehicle at the time of its sale to an eligible fleet owner if the vehicle is to be eligible for expanded TCM exemptions. An eligible fleet owner is one who is in a covered area and owns a total of at least ten motor vehicles (including the ILEV(s) being purchased) which operate in the owner's fleet. All of the following shall be provided to demonstrate eligibility: Photocopies of no less than nine motor vehicle registrations indicating registration in the ILEV purchaser's name, a signed statement by the ILEV purchaser that these vehicles are operational in the purchaser's fleet and that the ILEV being purchased will also be operated in this fleet, and a signed statement by the ILEV purchaser that the ILEV labels will be removed and disposed of when the vehicle is sold, given, leased (except as part of a daily rental fleet), or offered for long-term loan to someone who has not demonstrated eligibility for expanded TCMs available to ILEVs according to these criteria.

(c) *ILEV Label installation*. (1) Except as provided for in this paragraph (c), no person shall attach an ILEV label or any facsimile of an ILEV label to any vehicle.

(2)(i) The manufacturer or the manufacturer's agent shall attach three labels on the vehicle in plain sight: One on the rear of the vehicle and one on each of two sides of the vehicle. Each label shall conform to the specifications of paragraph (a) of this section.

(ii) In the case that an ILEV label of the proportions specified in paragraph (a)(1) of this section cannot be attached to the rear of the ILEV, the manufacturer or the manufacturer's agent shall attach to the rear of the vehicle an ILEV label of either of the following proportions:

(A) The label shall consist of a white rectangular background, approximately 4 inches (10 centimeters) high by 24 inches (60 centimeters) wide, with ''CLEAN AIR VEHICLE'' printed in contrasting block capital letters at least 2.8 inches (7 centimeters) tall and 1.3 inches (3.3 centimeters) wide with a stroke width not less than 0.3 inches (0.8 centimeter). In addition, the words ''INHERENTLY LOW-EMISSION VEHICLE'' must be present in lettering no smaller than 0.6 inches (1.5 centimeters) high. Nothing shall be added to the label which impairs readability. Labels shall include a serialized identification number; or

(B) The label shall consist of a white truncated-circular background, approximately 5 inches (12.5 centimeters) in diameter by 3.5 inches (8.8 centimeters) in height. The bottom edge of the truncated-circular background shall be approximately 1 inch (2.5 centimeters) from the center. The acronym ''ILEV'' shall be printed on the label in contrasting block capital letters at least 1 inch (2.5 centimeters) tall and 0.8 inches (2.0 centimeters) wide with a stroke width not less than 0.3 inches (0.8 centimeters). In addition, the words ''CLEAN AIR VEHICLE'' must be present in lettering no smaller than 0.4 inches (1.0 centimeter) high. Nothing shall be added to the label which impairs readability. Labels shall include a serialized identification number.

(d) *Label removal.* Fleet ILEV owners shall remove and dispose of the ILEV labels on a vehicle before selling or transferring ownership of an ILEV or offering it for lease (unless the ILEV is part of a daily rental fleet) or long-term loan. This provision shall not apply if the person who is receiving the

vehicle demonstrates eligibility for expanded TCM exemptions under the federal ILEV program as described in paragraph (b) of this section, or is otherwise qualified under state regulations which expressly expand ILEV label eligibility.

(e) *Label replacement.* (1) The manufacturer shall make replacement ILEV labels available to the fleet owner of a qualifying ILEV to replace any ILEV label which has been lost or removed due to vehicle damage, repair, sale, or lease. The fleet owner's request shall include proof of ownership of the ILEV in question and proof of the fleet owner's eligibility for ILEV TCM exemptions, as outlined in paragraph (c) of this section. Each label shall be imprinted with the same serial number as initially assigned to the damaged/missing ILEV label(s) for that vehicle. Any portion of a damaged label remaining on the ILEV shall be removed from the vehicle and submitted with the request as proof of loss.

(2) Upon receipt of the replacement ILEV label(s), the fleet owner shall attach the new ILEV label(s) only to the vehicle for which replacement ILEV label(s) were requested.

[58 FR 11901, Mar. 1, 1993, as amended at 61 FR 128, Jan. 3, 1996]

§88.313–93 Incentives for the purchase of Inherently Low-Emission Vehicles.

(a) *Administration.* (1) The incentives granted to ILEVs provided in this section are not effective outside of nonattainment areas for which states are required to establish CFFV programs under section 246 of the CAA, unless specifically added by states for qualifying vehicles.

(2) Incentives for purchasing ILEVs shall not be transferred between vehicles within the same fleet nor shall they be sold or traded.

(3) No vehicle over 26,000 pounds (11,800 kilograms) GVWR shall be eligible for the following ILEV incentives.

(b) *Exemption from temporal TCMs.* A fleet vehicle which has been certified and labeled as an ILEV according to the provisions of this section and which continues to be in compliance with applicable emissions standards and other ILEV program requirements shall be exempted from TCMs existing for air quality reasons included in approved state implementation plans which restrict vehicle usage based primarily on temporal considerations, such as time-of-day and day-of-week exemptions.

(c) *Exemption from high-occupancy vehicle lane restrictions.* (1) A fleet vehicle which has been certified and labeled as an ILEV according to the provisions of §§88.311 and 88.312 and which continues to be in compliance with applicable emissions standards and other ILEV program requirements shall be exempt from TCMs which restrict a vehicle's access to certain roadway lanes based on the number of occupants in that vehicle, usually known as high-occupancy vehicle (HOV) lanes. These exemptions shall not apply if they would create a clear and direct safety hazard.

(2) In a state containing a covered area, or areas, the governor may petition the Administrator for a waiver from the exemption from HOV lane restrictions for ILEVs for any section of HOV lane in the covered area(s) that can be shown to be congested primarily due to the operation or projected operation of ILEVs. The waiver application shall demonstrate the infeasibility of other means of alleviating HOV/CAV lane congestion, such as adding an additional HOV/CAV lane, further increasing vehicle occupancy requirements and reducing the use of the lane by noneligible vehicles.

TABLES TO SUBPART C OF PART 88

TABLE C94–1.—FLEET CREDIT TABLE BASED ON REDUCTION IN NMOG. VEHICLE EQUIVALENTS FOR LIGHT-DUTY VEHICLES AND LIGHT-DUTY TRUCKS

TABLE C94–1.1.—CREDIT GENERATION: PURCHASING MORE CLEAN-FUEL VEHICLES THAN REQUIRED BY THE MANDATE

NMOG	LDV, LDT ≤6000 GVWR, ≤3750 LVW	LDT ≤6000 GVWR, >3750 LVW ≤5750 LVW	LDT >6000 GVWR, ≤3750 ALVW	LDT >6000 GVWR, >3750 ALVW ≤5750 ALVW	LDT >6000 GVWR, >5750 ALVW
LEV	1.00	1.26	0.71	0.91	1.11
ULEV	1.20	1.54	1.00	1.26	1.56
ZEV	1.43	1.83	1.43	1.83	2.23

TABLE C94–1.2.—CREDIT GENERATION: PURCHASING A ULEV OR ZEV TO MEET THE MANDATE

NMOG	LDV, LDT ≤6000 GVWR, ≤3750 LVW	LDT 1≤6000 GVWR, >3750 LVW ≤5750 LVW	LDT >6000 GVWR, ≤3750 ALVW	LDT >6000 GVWR, >3750 ALVW, ≤5750 ALVW	LDT >6000 GVWR, >5750 ALVW
LEV	0.00	0.00	0.00	0.00	0.00
ULEV	0.20	0.29	0.29	0.34	0.45
ZEV	0.43	0.57	0.71	0.91	1.11

TABLE C94–1.3.—CREDIT NEEDED IN LIEU OF PURCHASING A LEV TO MEET THE MANDATE

NMOG	LDV, LDT ≤6000 GVWR, ≤3750 LVW	LDT ≤6000 GVWR, >3750 LVW ≤5750 LVW	LDT >6000 GVWR, ≤3750 ALVW	LDT >6000 GVWR, >3750 ALVW ≤5750 ALVW	LDT >6000 GVWR, ≤5750 ALVW
LEV	1.00	1.26	0.71	0.91	1.11

TABLE C94–2.—FLEET CREDIT TABLE BASED ON REDUCTION IN NMOG+NO_x. VEHICLE EQUIVALENTS FOR LIGHT-DUTY VEHICLES AND LIGHT-DUTY TRUCKS

TABLE C94–2.1.—CREDIT GENERATION: PURCHASING MORE CLEAN-FUEL VEHICLES THAN REQUIRED BY THE MANDATE

NMOG+NO_X	LDV, LDT ≤6000 GVWR, ≤3750 LVW	LDT ≤6000 GVWR, >3750 LVW ≤5750 LVW	LDT >6000 GVWR, ≤3750 ALVW	LDT >6000 GVWR, >3750 ALVW ≤5750 ALVW	LDT >6000 GVWR, >5750 ALVW
LEV	1.00	1.39	0.33	0.43	0.52
ULEV	1.09	1.52	1.00	1.39	2.06
ZEV	1.73	2.72	1.73	2.72	3.97

TABLE C94–2.2.—CREDIT GENERATION: PURCHASING A ULEV OR ZEV TO MEET THE MANDATE

NMOG+NO_X	LDV, LDT ≤6000 GVWR, ≤3750 LVW	LDT ≤6000 GVWR, >3750 LVW ≤5750 LVW	LDT >6000 GVWR, ≤3750 ALVW	LDT >6000 GVWR, >3750 ALVW ≤5750 ALVW	LDT >6000 GVWR, >5750 ALVW
LEV	0.00	0.00	0.00	0.00	0.00

TABLE C94–2.2.—CREDIT GENERATION: PURCHASING A ULEV OR ZEV TO MEET THE MANDATE—Continued

$NMOG+NO_X$	LDV, LDT ≤6000 GVWR, ≤3750 LVW	LDT ≤6000 GVWR, >3750 LVW ≤5750 LVW	LDT >6000 GVWR, ≤3750 ALVW	LDT >6000 GVWR, >3750 ALVW ≤5750 ALVW	LDT >6000 GVWR, >5750 ALVW
ULEV	0.09	0.13	0.67	0.96	1.54
ZEV	0.73	1.34	1.40	2.29	3.45

TABLE C94–2.3.—CREDIT NEEDED IN LIEU OF PURCHASING A LEV TO MEET THE MANDATE

$NMOG+NO_X$	LDV, LDT ≤6000 GVWR, ≤3750 LVW	LDT ≤6000 GVWR, >3750 LVW ≤5750 LVW	LDT ≤6000 GVWR, ≤3750 ALVW	LDT >6000 GVWR, >3750 ALVW ≤5750 ALVW	LDT >6000 GVWR, >5750 ALVW
LEV	1.00	1.39	0.33	0.43	0.52

TABLE C94–3.—FLEET CREDIT TABLE BASED ON REDUCTION IN CARBON MONOXIDE. VEHICLE EQUIVALENTS FOR LIGHT-DUTY VEHICLES AND LIGHT-DUTY TRUCKS

TABLE C94–3.1.—CREDIT GENERATION: PURCHASING MORE CLEAN-FUEL VEHICLES THAN REQUIRED BY THE MANDATE

CO	LDV, LDT ≤6000 GVWR, ≤3750 LVW	LDT ≤6000 GVWR, >3750 LVW ≤5750 LVW	LDT ≤6000 GVWR, ≤3750 ALVW	LDT >6000 GVWR, >3750 ALVW ≤5750 ALVW	LDT >6000 GVWR, >5750 ALVW
LEV	1.00	1.00	1.00	1.00	1.00
ULEV	2.00	2.29	2.00	2.29	2.47
ZEV	3.00	3.59	3.00	3.59	3.94

TABLE C94–3.2.—CREDIT GENERATION: PURCHASING A ULEV OR ZEV TO MEET THE MANDATE

CO	LDV, LDT ≤6000 GVWR, ≤3750 LVW	LDT ≤6000 GVWR, >3750 LVW ≤5750 LVW	LDT >6000 GVWR, ≤3750 ALVW	LDT >6000 GVWR, >3750 ALVW ≤5750 ALVW	LDT >6000 GVWR, >5750 ALVW
LEV	0.00	0.00	0.00	0.00	0.00
ULEV	1.00	1.00	1.00	1.00	1.00
ZEV	2.00	2.29	2.00	2.29	2.47

TABLE C94–3.3.—CREDIT NEEDED IN LIEU OF PURCHASING A LEV TO MEET THE MANDATE

CO	LDV, LDT ≤6000 GVWR, ≤3750 LVW	LDT ≤6000 GVWR, >3750 LVW ≤5750 LVW	LDT >6000 GVWR, ≤3750 ALVW	LDT >6000 GVWR, >3750 ALVW ≤5750 ALVW	LDT >6000 GVWR, >5750 ALVW
LEV	1.00	1.00	1.00	1.00	1.00

TABLE C94–4.—FLEET CREDIT TABLE BASED ON REDUCTION IN NMHC+NO_X. VEHICLE EQUIVALENTS FOR HEAVY-DUTY VEHICLES—TABLE C94–4.1.—CREDIT GENERATION: PURCHASING MORE CLEAN-FUEL VEHICLES THAN REQUIRED BY THE MANDATE

NMHC+NO_X	Light HDV	Medium HDV	Heavy HDV
LEV	1.00	1.00	1.00
ULEV	1.87	1.87	1.87
ZEV	3.53	3.53	3.53

TABLE C94–4.2.—CREDIT GENERATION: PURCHASING A ULEV OR ZEV TO MEET THE MANDATE

NMHC+NO_X	Light HDV	Medium HDV
LEV	0.00	0.00
ULEV	0.87	0.87
ZEV	2.53	2.53

TABLE C94–4.3.—CREDIT NEEDED IN LIEU OF PURCHASING A LEV TO MEET THE MANDATE

NMHC+NO_X	Light HDV	Medium HDV
LEV	1.00	1.00

TABLE C94–5.—FLEET CREDIT TABLE BASED ON REDUCTION IN CO. VEHICLE EQUIVALENTS FOR HEAVY-DUTY VEHICLES—TABLE C94–5.1.—CREDIT GENERATION: PURCHASING MORE CLEAN-FUEL VEHICLES THAN REQUIRED BY THE MANDATE

CO	Light HDV	Medium HDV	Heavy HDV
LEV	1.00	1.00	1.00
ULEV	2.00	2.00	2.00
ZEV	3.00	3.00	3.00

TABLE C94–5.2.—CREDIT GENERATION: PURCHASING A ULEV OR ZEV TO MEET THE MANDATE

CO	Light HDV	Medium HDV
LEV	0.00	0.00
ULEV	1.00	1.00
ZEV	2.00	2.00

TABLE C94–5.3.—CREDIT NEEDED IN LIEU OF PURCHASING A LEV TO MEET THE MANDATE

CO	Light HDV	Medium HDV
LEV	1.00	1.00

[58 FR 11901, Mar. 1, 1993, as amended at 59 FR 50082, Sept. 30, 1994, 61 FR 128, Jan. 3, 1996]

PART 89—CONTROL OF EMISSIONS FROM NEW AND IN-USE NONROAD ENGINES

Subpart A—General

Sec.
89.1 Applicability.
89.2 Definitions.
89.3 Acronyms and abbreviations.
89.4 Section numbering.
89.5 Table and figure numbering; position.
89.6 Reference materials.
89.7 Treatment of confidential information.

APPENDIX A TO SUBPART A—INTERNAL COMBUSTION ENGINES MANUFACTURED PRIOR TO JULY 18, 1994

Subpart B—Emission Standards and Certification Provisions

89.101–96 Applicability.
89.102–96 Effective dates, optional inclusion.
89.103–96 Definitions.
89.104–96 Useful life, recall, and warranty periods.
89.105–96 Certificate of conformity.
89.106–96 Prohibited controls.
89.107–96 Defeat devices.
89.108–96 Adjustable parameters, requirements.
89.109–96 Maintenance instructions.
89.110–96 Emission control information label.
89.111–96 Averaging, banking, and trading of exhaust emissions.
89.112–96 Oxides of nitrogen, carbon monoxide, hydrocarbon, and particulate matter exhaust emission standards.
89.113–96 Smoke emission standard.
89.114–96 Special test procedures.
89.115–96 Application for certificate.
89.116–96 Engine families.
89.117–96 Test fleet selection.
89.118–96 Service accumulation.
89.119–96 Emission tests.
89.120–96 Compliance with emission standards.
89.121–96 Certificate of conformity effective dates.
89.122–96 Certification.
89.123–96 Amending the application and certificate of conformity.
89.124–96 Record retention, maintenance, and submission.
89.125–96 Production engines, annual report.
89.126–96 Denial, revocation of certificate of conformity.
89.127–96 Request for hearing.
89.128–96 Hearing procedures.
89.129–96 Right of entry.

Subpart C—Averaging, Banking, and Trading Provisions

89.201–96 Applicability.
89.202–96 Definitions.
89.203–96 General provisions.
89.204–96 Averaging.
89.205–96 Banking.
89.206–96 Trading.
89.207–96 Credit calculation.
89.208–96 Labeling.
89.209–96 Certification.
89.210–96 Maintenance of records.
89.211–96 End-of-year and final reports.
89.212–96 Notice of opportunity for hearing.

Subpart D—Emission Test Equipment Provisions

89.301–96 Scope; applicability.
89.302–96 Definitions.
89.303–96 Symbols/abbreviations.
89.304–96 Equipment required for gaseous emissions; overview.
89.305–96 Equipment measurement accuracy/calibration frequency.
89.306–96 Dynamometer specifications and calibration weights.
89.307–96 Dynamometer calibration.
89.308–96 Sampling system requirements for gaseous emissions.
89.309–96 Analyzers required for gaseous emissions.
89.310–96 Analyzer accuracy and specifications.
89.311–96 Analyzer calibration frequency.
89.312–96 Analytical gases.
89.313–96 Initial calibration of analyzers.
89.314–96 Pre- and post-test calibration of analyzers.
89.315–96 Analyzer bench checks.
89.316–96 Analyzer leakage and response time.
89.317–96 NO_x converter check.
89.318–96 Analyzer interference checks.
89.319–96 Hydrocarbon analyzer calibration.
89.320–96 Carbon monoxide analyzer calibration.
89.321–96 Oxides of nitrogen analyzer calibration.
89.322–96 Carbon dioxide analyzer calibration.
89.323–96 NDIR analyzer calibration.
89.324–96 Calibration of other equipment.
89.325–96 Engine intake air temperature measurement.
89.326–96 Engine intake air humidity measurement.
89.327–96 Charge cooling.
89.328–96 Inlet and exhaust restrictions.
89.329–96 Engine cooling system.
89.330–96 Lubricating oil and test fuels.
89.331–96 Test conditions.

APPENDIX A TO SUBPART D—TABLES

APPENDIX B TO SUBPART D—FIGURES

Subpart E—Exhaust Emission Test Procedures

89.401–96 Scope; applicability.
89.402–96 Definitions.
89.403–96 Symbols/abbreviations.
89.404–96 Test procedure overview.
89.405–96 Recorded information.
89.406–96 Pre-test procedures.
89.407–96 Engine dynamometer test run.
89.408–96 Post-test procedures.
89.409–96 Data logging.
89.410–96 Engine test cycle.
89.411–96 Exhaust sample procedure—gaseous components.
89.412–96 Raw gaseous exhaust sampling and analytical system description.
89.413–96 Raw sampling procedures.
89.414–96 Air flow measurement specifications.
89.415–96 Fuel flow measurement specifications.
89.416–96 Raw exhaust gas flow.
89.417–96 Data evaluation for gaseous emissions.
89.418–96 Raw emission sampling calculations.
89.419–96 Dilute gaseous exhaust sampling and analytical system description.
89.420–96 Background sample.
89.421–96 Exhaust gas analytical system; CVS bag sample.
89.422–96 Dilute sampling procedures—CVS calibration.
89.423–96 CVS calibration frequency.
89.424–96 Dilute emission sampling calculations.
89.425–96 Particulate adjustment factor.

APPENDIX A TO SUBPART E—FIGURES

APPENDIX B TO SUBPART E—TABLE 1

Subpart F—Selective Enforcement Auditing

89.501–96 Applicability.
89.502–96 Definitions.
89.503–96 Test orders.
89.504–96 Testing by the Administrator.
89.505–96 Maintenance of records; submittal of information.
89.506–96 Right of entry and access.
89.507–96 Sample selection.
89.508–96 Test procedures.
89.509–96 Calculation and reporting of test results.
89.510–96 Compliance with acceptable quality level and passing and failing criteria for selective enforcement audits.
89.511–96 Suspension and revocation of certificates of conformity.
89.512–96 Request for public hearing.
89.513–96 Administrative procedures for public hearing.

89.514–96 Hearing procedures.
89.515–96 Appeal of hearing decision.
89.516–96 Treatment of confidential information.

APPENDIX A TO SUBPART F—SAMPLING PLANS FOR SELECTIVE ENFORCEMENT AUDITING OF NONROAD ENGINES

Subpart G—Importation of Nonconforming Nonroad Engines

89.601–96 Applicability.
89.602–96 Definitions.
89.603–96 General requirements for importation of nonconforming nonroad engines.
89.604–96 Conditional admission.
89.605–96 Final admission of certified nonroad engines.
89.606–96 Inspection and testing of imported nonroad engines.
89.607–96 Maintenance of independent commercial importer's records.
89.608–96 ''In Use'' inspections and recall requirements.
89.609–96 Final admission of modification nonroad engines and test nonroad engines.
89.610–96 Maintenance instructions, warranties, emission labeling.
89.611–96 Exemptions and exclusions.
89.612–96 Prohibited acts; penalties.
89.613–96 Treatment of confidential information.

Subpart H—Recall Regulations

89.701 Applicability.
89.702 Definitions.
89.703 Applicability of part 85, subpart S.

Subpart I—Emission Defect Reporting Requirements

89.801 Applicability.
89.802 Definitions.
89.803 Applicability of part 85, subpart T.

Subpart J—Exemption Provisions

89.901 Applicability.
89.902 Definitions.
89.903 Application of section 216(10) of the Act.
89.904 Who may request an exemption.
89.905 Testing exemption.
89.906 Manufacturer-owned exemption and precertification exemption.
89.907 Display exemption.
89.908 National security exemption.
89.909 Export exemptions.
89.910 Granting of exemptions.
89.911 Submission of exemption requests.
89.912 Treatment of confidential information.

Subpart K—General Enforcement Provisions and Prohibited Acts

89.1001 Applicability.
89.1002 Definitions.
89.1003 Prohibited acts.
89.1004 General enforcement provisions.
89.1005 Injunction proceedings for prohibited acts.
89.1006 Penalties.
89.1007 Warranty provisions.
89.1008 In-use compliance provisions.

AUTHORITY: Sections 202, 203, 204, 205, 206, 207, 208, 209, 213, 215, 216, and 301(a) of the Clean Air Act, as amended (42 U.S.C. 7521, 7522, 7523, 7524, 7525, 7541, 7542, 7543, 7547, 7549, 7550, and 7601(a)).

SOURCE: 59 FR 31335, June 17, 1994, unless otherwise noted.

Subpart A—General

§ 89.1 Applicability.

(a) This part applies to nonroad compression-ignition engines that have a gross power output at or above 37 kilowatts (kW) and that are used for any purpose.

(b) The following nonroad engines are not subject to the provisions of this part:

(1) Engines used in aircraft as defined in § 87.1(a) of this chapter;

(2) Engines used in underground mining or engines used in underground mining equipment and regulated by the Mining Safety and Health Administration (MSHA) in 30 CFR parts 7, 31, 32, 36, 56, 57, 70, and 75;

(3) Engines used to propel a locomotive; and

(4) Engines used in marine vessels as defined in the General Provisions of the United States Code, 1 U.S.C. 3 (1992).

§ 89.2 Definitions.

The following definitions apply to part 89. All terms not defined herein have the meaning given them in the Act.

Act means the Clean Air Act, as amended, 42 U.S.C. 7401 *et seq.*

Adjustable parameter means any device, system, or element of design which is physically capable of being adjusted (including those which are difficult to access) and which, if adjusted, may affect emissions or engine performance during emission testing.

Administrator means the Administrator of the Environmental Protection Agency or his or her authorized representative.

Auxiliary emission control device (AECD) means any element of design that senses temperature, vehicle speed, engine RPM, transmission gear, or any other parameter for the purpose of activating, modulating, delaying, or deactivating the operation of any part of the emission control system.

Certification means, with respect to new nonroad engines, obtaining a certificate of conformity for an engine family complying with the nonroad engine emission standards and requirements specified in this part.

Emission control system means any device, system, or element of design which controls or reduces the emission of substances from an engine.

Engine, as used in this part, refers to nonroad engine.

Engine manufacturer means any person engaged in the manufacturing or assembling of new nonroad engines or importing such engines for resale, or who acts for and is under the control of any such person in connection with the distribution of such engines. Engine manufacturer does not include any dealer with respect to new nonroad engines received by such person in commerce.

Engine used in a locomotive means either an engine placed in the locomotive to move other equipment, freight, or passenger traffic, or an engine mounted on the locomotive to provide auxiliary power.

EPA enforcement officer means any officer or employee of the Environmental Protection Agency so designated in writing by the Administrator (or by his or her designee).

Family emission limit (FEL) means an emission level that is declared by the manufacturer to serve in lieu of an emission standard for certification purposes and for the averaging, banking, and trading program. A FEL must be expressed to the same number of decimal places as the applicable emission standard.

Gross power means the power measured at the crankshaft or its equivalent, the engine being equipped only with the standard accessories (such as oil pumps, coolant pumps, and so forth) necessary for its operation on the test bed. Alternators must be used, if necessary, to run the engine. Fans, air conditioners, and other accessories may be used at the discretion of the manufacturer, but no power adjustments for these accessories may be made.

Identification number means a specification (for example, model number/serial number combination) which allows a particular nonroad engine to be distinguished from other similar engines.

Locomotive means a self-propelled piece of on-track equipment (other than equipment designed for operation both on highways and rails, specialized maintenance equipment, and other similar equipment) designed for moving other equipment, freight or passenger traffic.

Model year (MY) means the manufacturer's annual new model production period which includes January 1 of the calendar year, ends no later than December 31 of the calendar year, and does not begin earlier than January 2 of the previous calendar year. Where a manufacturer has no annual new model production period, model year means calendar year.

New, for purposes of this part, means a nonroad engine, nonroad vehicle, or nonroad equipment the equitable or legal title to which has never been transferred to an ultimate purchaser until after the engine, vehicle, or equipment is placed into service, then the engine, vehicle, or equipment will no longer be new after it is placed into service. A nonroad engine, vehicle, or equipment is placed into service when it is used for its functional purposes. With respect to imported nonroad engines, nonroad vehicles, or nonroad equipment, the term ''new'' means an engine, vehicle, or piece of equipment that is not covered by a certificate of conformity issued under this part at the time of importation, and that is manufactured after the effective date of a regulation issued under this part which is applicable to such engine, vehicle, or equipment (or which would be applicable to such engine, vehicle, or equipment had it been manufactured for importation into the United States.

Nonroad compression-ignition engine means a nonroad engine which utilizes the compression-ignition combustion cycle.

Nonroad engine means:

(1) Except as discussed in paragraph (2) of this definition, a nonroad engine is any internal combustion engine:

(i) in or on a piece of equipment that is self-propelled or serves a dual purpose by both propelling itself and performing another function (such as garden tractors, off-highway mobile cranes and bulldozers); or

(ii) in or on a piece of equipment that is intended to be propelled while performing its function (such as lawnmowers and string trimmers); or

(iii) that, by itself or in or on a piece of equipment, is portable or transportable, meaning designed to be and capable of being carried or moved from one location to another. Indicia of transportability include, but are not limited to, wheels, skids, carrying handles, dolly, trailer, or platform.

(2) An internal combustion engine is not a nonroad engine if:

(i) the engine is used to propel a motor vehicle or a vehicle used solely for competition, or is subject to standards promulgated under section 202 of the Act; or

(ii) the engine is regulated by a federal New Source Performance Standard promulgated under section 111 of the Act; or

(iii) the engine otherwise included in paragraph (1)(iii) of this definition remains or will remain at a location for more than 12 consecutive months or a shorter period of time for an engine located at a seasonal source. A location is any single site at a building, structure, facility, or installation. Any engine (or engines) that replaces an engine at a location and that is intended to perform the same or similar function as the engine replaced will be included in calculating the consecutive time period. An engine located at a seasonal source is an engine that remains at a seasonal source during the full annual operating period of the seasonal source. A seasonal source is a stationary source that remains in a single location on a permanent basis (i.e., at least two years) and that operates at that single location approximately three months (or more) each year. This paragraph does not apply to an engine after the engine is removed from the location.

Nonroad equipment means equipment that is powered by nonroad engines.

Nonroad vehicle means a vehicle that is powered by a nonroad engine as defined in this section and that is not a motor vehicle or a vehicle used solely for competition.

Nonroad vehicle or nonroad equipment manufacturer means any person engaged in the manufacturing or assembling of new nonroad vehicles or equipment or importing such vehicles or equipment for resale, or who acts for and is under the control of any such person in connection with the distribution of such vehicles or equipment. A nonroad vehicle or equipment manufacturer does not include any dealer with respect to new nonroad vehicles or equipment received by such person in commerce.

Opacity means the fraction of a beam of light, expressed in percent, which fails to penetrate a plume of smoke.

Operating hours means:

(1) For engine storage areas or facilities, all times during which personnel other than custodial personnel are at work in the vicinity of the storage area or facility and have access to it.

(2) For all other areas or facilities, all times during which an assembly line is in operation or all times during which testing, maintenance, service accumulation, production or compilation of records, or any other procedure or activity related to certification testing, to translation of designs from the test stage to the production stage, or to engine manufacture or assembly is being carried out in a facility.

Presentation of credentials means the display of the document designating a person as an EPA enforcement officer or EPA authorized representative.

Test fleet means the engine or group of engines that a manufacturer uses during certification to determine compliance with emission standards.

Ultimate purchaser means, with respect to any new nonroad engine, new nonroad vehicle, or new nonroad equipment, the first person who in good faith purchases such new nonroad engine, nonroad vehicle, or nonroad

equipment for purposes other than resale.

Used solely for competition means exhibiting features that are not easily removed and that would render its use other than in competition unsafe, impractical, or highly unlikely.

[59 FR 31335, June 17, 1994, as amended at 61 FR 52102, Oct. 4, 1996]

§89.3 Acronyms and abbreviations.

The following acronyms and abbreviations apply to part 89.

AECD	Auxiliary emission control device.
ASME	American Society of Mechanical Engineers.
ASTM	American Society for Testing and Materials.
CAA	Clean Air Act.
CAAA	Clean Air Act Amendments of 1990.
CI	Compression-ignition.
CO	Carbon monoxide.
CO_2	Carbon dioxide.
EPA	Environmental Protection Agency.
FEL	Family emission limit.
FTP	Federal Test Procedure.
g/kW-hr	Grams per kilowatt hour.
HC	Hydrocarbons.
ICI	Independent Commercial Importer.
kW	Kilowatt.
NIST	National Institute for Standards and Testing.
NTIS	National Technical Information Service.
NO	Nitric oxide.
NO_2	Nitrogen dioxide.
NO_X	Oxides of nitrogen.
O_2	Oxygen.
OEM	Original equipment manufacturer.
SAE	Society of Automotive Engineers.
SEA	Selective Enforcement Auditing.
SI	Spark-ignition.
U.S.C.	United States Code.
VOC	Volatile organic compounds.

§89.4 Section numbering.

(a) Sections are numbered sequentially by subpart.

(b) Where two different standards or requirements are concurrently applicable, the model year of applicability is indicated by the number following the main section number. The two digits following the hyphen designate the first model year for which a section is effective.

EXAMPLE: Section 89.304–96 applies to the 1996 and subsequent model years until superseded. If a §89.304–98 is promulgated, it would take effect beginning with the 1998 model year; §89.304–96 would apply to model years 1996 through 1997. Therefore, in calendar year 1997, a manufacturer may be certifying both 1997 and 1998 model year engines, requiring the use of different requirements concurrently.

NOTE: Model year 2000 and later will appear sequentially with 1999 and earlier based on the order of the last two digits of the year, not in calendar year order; that is, §89.304–03 will appear before §89.304–99.

(c) A section without the model year designation is applicable to all model years as designated in the applicability section for the subpart or part or in the text of the section.

§89.5 Table and figure numbering; position.

(a) Tables for each subpart appear in an appendix at the end of the subpart. Tables are numbered consecutively by order of appearance in the appendix. The table title will indicate the model year (if applicable) and the topic.

(b) Figures for each subpart appear in an appendix at the end of the subpart. Figures are numbered consecutively by order of appearance in the appendix. The figure title will indicate the model year (if applicable) and the topic.

§89.6 Reference materials.

(a) *Incorporation by reference.* The documents in paragraph (b) of this section have been incorporated by reference. The incorporation by reference was approved by the Director of the Federal Register in accordance with 5 U.S.C. 552(a) and 1 CFR part 51. Copies may be inspected at US EPA, OAR, 401 M Street SW., Washington, DC 20460, or at the Office of the Federal Register, 800 N. Capitol Street NW., Suite 700, Washington, DC.

(b) The following paragraphs and tables set forth the material that has

been incorporated by reference in this part.

(1) *ASTM material.* The following table sets forth material from the American Society for Testing and Materials which has been incorporated by reference. The first column lists the number and name of the material. The second column lists the section(s) of this part, other than § 89.6, in which the matter is referenced. The second column is presented for information only and may not be all inclusive. Copies of these materials may be obtained from American Society for Testing and Materials, 1916 Race St., Philadelphia, PA 19103.

Document number and name	40 CFR part 89 reference
ASTM D86–90:	
Standard Test Method for Distillation of Petroleum Products	Appendix A to Subpart D.
ASTM D93–90:	
Standard Test Methods for Flash Point by Pensky-Martens Closed Tester	Appendix A to Subpart D.
ASTM D129–91:	
Standard Test Method for Sulfur in Petroleum Products (General Bomb Method)	Appendix A to Subpart D.
ASTM D287–92:	
Standard Test Method for API Gravity of Crude Petroleum and Petroleum Products (Hydrometer Method).	Appendix A to Subpart D.
ASTM D445–88:	
Standard Test Method for Kinematic Viscosity of Transparent and Opaque Liquids (and the Calculation of Dynamic Viscosity).	Appendix A to Subpart D.
ASTM D613–86:	
Standard Test Method for Ignition Quality of Diesel Fuels by the Cetane Method	Appendix A to Subpart D.
ASTM D1319–89:	
Standard Test Method for Hydrocarbon Types in Liquid Petroleum Products by Fluorescent Indicator Adsorption.	Appendix A to Subpart D.
ASTM D2622–92:	
Standard Test Method for Sulfur in Petroleum Products by X-ray Spectrometry	Appendix A to Subpart D.
ASTM E29–90:	
Standard Practice for Using Significant Digits in Test Data to Determine Conformance with Specifications.	89.207–96; 89.509–96.

(2) *SAE material.* The following table sets forth material from the Society of Automotive Engineers which has been incorporated by reference. The first column lists the number and name of the material. The second column lists the section(s) of this part, other than § 89.6, in which the matter is referenced. The second column is presented for information only and may not be all inclusive. Copies of these materials may be obtained from Society of Automotive Engineers International, 400 Commonwealth Dr., Warrendale, PA 15096–0001.

Document number and name	40 CFR part 89 reference
SAE J244 June 83:	
Recommended Practice for Measurement of Intake Air or Exhaust Gas Flow of Diesel Engines	89.416–96
SAE J1937 November 89:	
Recommended Practice for Engine Testing with Low Temperature Charge Air Cooler Systems in a Dynamometer Test Cell	89.327–96
SAE Paper 770141:	
Optimization of a Flame Ionization Detector for Determination of Hydrocarbon in Diluted Automotive Exhausts, Glenn D. Reschke	89.319–96

(3) *California Air Resources Board Test Procedure.* The following table sets forth material from the Title 13, California Code of Regulations, Sections 2420–2427, as amended by California Air Resources Board Resolution 92–2 and published in California Air Resources Board mail out #93–42, September 1, 1993) which has been incorporated by reference. The first column lists the number and name of the material. The second column lists the section(s) of this part, other than § 89.6, in which the matter is referenced. The second column is presented for information only and may not be all inclusive. Copies of

these materials may be obtained from California Air Resources Board, Haagen-Smit Laboratory, 9528 Telstar Avenue, El Monte, CA 91731–2990.

Document number and name	40 CFR part 89 reference
California Regulations for New 1996 and Later Heavy-Duty Off-Road Diesel Cycle Engines	89.112–96 89.119–96 89.508–96

§89.7 Treatment of confidential information.

(a) Any manufacturer may assert that some or all of the information submitted pursuant to this part is entitled to confidential treatment as provided by part 2, subpart B of this chapter.

(b) Any claim of confidentiality must accompany the information at the time it is submitted to EPA.

(c) To assert that information submitted pursuant to this part is confidential, a manufacturer must indicate clearly the items of information claimed confidential by marking, circling, bracketing, stamping, or otherwise specifying the confidential information. Furthermore, EPA requests, but does not require, that the submitter also provide a second copy of its submittal from which all confidential information has been deleted. If a need arises to publicly release nonconfidential information, EPA will assume that the submitter has accurately deleted the confidential information from this second copy.

(d) If a claim is made that some or all of the information submitted pursuant to this part is entitled to confidential treatment, the information covered by that confidentiality claim will be disclosed by the Administrator only to the extent and by means of the procedures set forth in part 2, subpart B of this chapter.

(e) Information provided without a claim of confidentiality at the time of submission may be made available to the public by EPA without further notice to the submitter, in accordance with §2.204(c)(2)(i)(A) of this chapter.

APPENDIX A TO SUBPART A—INTERNAL COMBUSTION ENGINES MANUFACTURED PRIOR TO JULY 18, 1994

This appendix sets forth the Environmental Protection Agency's (EPA's) interpretation of the Clean Air Act regarding the status of certain internal combustion engines manufactured before July 18, 1994, (the effective date of the final rulemaking promulgating EPA's definition of nonroad engine). This interpretation does not alter, replace, supersede, or change the scope of subpart A. It is not final agency action subject to judicial review.

1. EPA interprets the Clean Air Act as not precluding state regulation of internal combustion engines manufactured prior to July 18, 1994, except that state regulation of such engines that are used in motor vehicles or vehicles used solely for competition is precluded. EPA believes that the language of Clean Air Act section 302(z) generally excluding emissions resulting directly from nonroad engines and nonroad vehicles from the definition of stationary source could not be applied until after the definition of nonroad engine was specified in final regulations promulgated by EPA. EPA believes that if the exclusionary language of section 302(z) were applied before EPA's definition of nonroad engine became final, states would have been frustrated from regulating internal combustion engines manufactured during that time, given the uncertain nature of the definition of such engines. EPA believes that Congress did not intend states to be prevented from regulating these engines before a final EPA definition was promulgated. EPA does not believe that Congress intended the exclusionary language of section 302(z) regarding nonroad engines and vehicles to be applied retroactively to engines, vehicles, and equipment regulated pursuant to a permit issued before the date that the terms nonroad engine and nonroad vehicle were defined.

2. EPA further believes that internal combustion engines manufactured prior to July 18, 1994 are not preempted, under Clean Air Act section 209, from state regulation. The two sections of the Act preempting state regulation of nonroad engines, section 209(e)(1) and section 209(a) (as incorporated by section 213(d)), refer to ''nonroad engines subject to regulation under this Act'' or to engines ''subject to this part'' (i.e., part A of title II of the Act). EPA believes that, until EPA promulgated final regulations defining nonroad engines and subjecting such engines to regulation, these engines were not preempted from state regulation under the Act,

as the engines were not yet defined as nonroad engines, nor were they subject to any regulation under title II of the Act. In the regulations with an effective date of July 18, 1994, EPA has issued final rules defining nonroad engines and, thus, subjecting nonroad engines to regulation under part A of title II of the Act. Accordingly, EPA believes that pursuant to Clean Air Act section 209, state regulation of new nonroad engines is preempted for engines manufactured on or after that date, and is not preempted as to engines manufactured before that date.

3. Moreover, EPA believes that states are not precluded under section 209 from regulating the use and operation of nonroad engines, such as regulations on hours of usage, daily mass emission limits, or sulfur limits on fuel; nor are permits regulating such operations precluded once the engine is placed into service or once the equitable or legal title to the engine or vehicle is transferred to an ultimate purchaser, as long as no certification, inspection, or other approval related to the control on emissions is required as a condition precedent to the initial retail sale, titling, or registration of the engine or equipment. EPA believes that states are not prevented by section 209 from requiring retrofitting of nonroad engines in certain circumstances once a reasonable time has passed after the engine is no longer new, as long as the requirements do not amount to a standard relating back to the original manufacturer. Therefore, EPA believes that modest retrofit requirements may be required after a reasonable amount of time (e.g., at the time of reregistration or rebuilding) and more significant retrofit requirements may be required after a more significant period of time (e.g., after the end of the useful life of the engine).

Subpart B—Emission Standards and Certification Provisions

§ 89.101–96 Applicability.

The requirements of subpart B are applicable to all new nonroad compression-ignition engines subject to the provisions of subpart A of part 89, pursuant to the schedule delineated in § 89.102–96.

§ 89.102–96 Effective dates, optional inclusion.

(a) This subpart applies to all engines described in § 89.101–96 with the following gross power output and manufactured after the following dates:

(1) Greater than or equal to 37 kW but less than 75 kW and manufactured on or after January 1, 1998;

(2) Greater than or equal to 75 kW but less than 130 kW and manufactured on or after January 1, 1997;

(3) Greater than or equal to 130 kW but less than or equal to 560 kW and manufactured on or after January 1, 1996;

(4) Greater than 560 kW and manufactured on or after January 1, 2000.

(b) A manufacturer can optionally certify engines manufactured up to one calendar year prior to the effective date of mandatory certification to earn emission credits under the averaging, banking, and trading program. Such optionally certified engines are subject to all provisions relating to mandatory certification and enforcement described in this part.

§ 89.103–96 Definitions.

The definitions in subpart A of part 89 apply to this subpart. All terms not defined herein or in subpart A have the meaning given them in the Act.

§ 89.104–96 Useful life, recall, and warranty periods.

(a) The useful life is a period of 8,000 hours of operation or ten years of use, whichever first occurs.

(b) Engines are subject to recall testing for a period of 6,000 hours of operation or seven years of use, whichever first occurs. However, in a recall, engines in the subject class or category must be recalled regardless of actual years or hours of operation.

(c) Warranties imposed by the Clean Air Act are for 3,000 hours of operation or five years of use, whichever first occurs.

(d) Manufacturers may apply to the Administrator for approval for a shorter useful life period for engines that are subject to severe service in seasonal equipment, or are designed specifically for lower useful life hours to match equipment life. Such an application must be made prior to certification.

§ 89.105–96 Certificate of conformity.

Every manufacturer of a new nonroad compression-ignition engine must obtain a certificate of conformity covering the engine family, as described in § 89.116–96. The certificate of conformity must be obtained from the

Administrator prior to selling, offering for sale, introducing into commerce, or importing into the United States the new nonroad compression-ignition engine for each model year.

§ 89.106–96 Prohibited controls.

(a) An engine may not be equipped with an emission control system for the purpose of complying with emission standards if such system will cause or contribute to an unreasonable risk to public health, welfare, or safety in its operation or function.

(b) An engine with an emission control system may not emit any noxious or toxic substance which would not be emitted in the operation of such engine in the absence of such system except as specifically permitted by regulation.

§ 89.107–96 Defeat devices.

(a) An engine may not be equipped with a defeat device.

(b) For purposes of this section, ''defeat device'' means any device, system, or element of design which senses operation outside normal emission test conditions and reduces emission control effectiveness.

(1) Defeat device includes any auxiliary emission control device (AECD) that reduces the effectiveness of the emission control system under conditions which may reasonably be expected to be encountered in normal operation and use unless such conditions are included in the test procedure.

(2) Defeat device does not include such items which either operate only during engine starting or are necessary to protect the engine (or equipment in which it is installed) against damage or accident during its operation.

§ 89.108–96 Adjustable parameters, requirements.

(a) Nonroad engines equipped with adjustable parameters must comply with all requirements of this subpart for any adjustment in the physically adjustable range.

(b) An operating parameter is not considered adjustable if it is permanently sealed or otherwise not normally accessible using ordinary tools.

(c) The Administrator may require that adjustable parameters be set to any specification within its adjustable range for certification, selective enforcement audit, or in-use testing to determine compliance with the requirements of this subpart.

§ 89.109–96 Maintenance instructions.

The manufacturer must furnish or cause to be furnished to the ultimate purchaser of each new nonroad engine written instructions for the maintenance needed to assure proper functioning of the emission control system.

§ 89.110–96 Emission control information label.

(a) The manufacturer must affix at the time of manufacture a permanent and legible label identifying each nonroad engine. The label must meet the following requirements:

(1) Be attached in such a manner that it cannot be removed without destroying or defacing the label;

(2) Be durable and readable for the entire engine life;

(3) Be secured to an engine part necessary for normal engine operation and not normally requiring replacement during engine life;

(4) Be written in English; and

(5) Be located so as to be readily visible to the average person after the engine is installed in the equipment. A supplemental label meeting all the requirements of this section may be attached to a location other than the engine, in cases where the required label must be obscured after the engine is installed in the equipment.

(b) The label must contain the following information:

(1) The heading ''Important Engine Information;''

(2) The full corporate name and trademark of the manufacturer;

(3) EPA standardized engine family designation;

(4) Engine displacement;

(5) Advertised power;

(6) Engine tuneup specifications and adjustments. These should indicate the proper transmission position during tuneup, and accessories (for example, air conditioner), if any, that should be in operation;

(7) Fuel requirements;

(8) Date of manufacture (month and year). The manufacturer may, in lieu of including the date of manufacture

on the engine label, maintain a record of the engine manufacture dates. The manufacturer shall provide the date of manufacture records to the Administrator upon request;

(9) Family emission limits (FELs) if applicable; and

(10) The statement: ''This engine conforms to [model year] U.S. EPA regulations large nonroad compression- ignition engines.''

(c) Other information concerning proper maintenance and use or indicating compliance or noncompliance with other standards may be indicated on the label.

(d) Each engine must have a legible unique engine identification number permanently affixed to or engraved on the engine.

§ 89.111–96 Averaging, banking, and trading of exhaust emissions.

Regulations regarding the availability of an averaging, banking, and trading program along with applicable record- keeping requirements are found in subpart C of this part. Participation in the averaging, banking, and trading program is optional.

§ 89.112–96 Oxides of nitrogen, carbon monoxide, hydrocarbon, and particulate matter exhaust emission standards.

(a) Nonroad engines to which this subpart is applicable must meet the following exhaust emission standards:

(1) Exhaust emissions of oxides of nitrogen shall not exceed 9.2 grams per kilowatt hour (g/kW-hr).

(2) Exhaust emissions of carbon monoxide shall not exceed 11.4 g/kW-hr for engines at and above 130 kW.

(3) Exhaust emissions of hydrocarbon shall not exceed 1.3 g/kW-hr for engines at and above 130 kW.

(4) Exhaust emissions of particulate matter shall not exceed 0.54 g/kW-hr for engines at and above 130 kW.

(b) Exhaust emission of oxides of nitrogen, carbon monoxide, and hydrocarbon is measured using the procedures set forth in subpart E of this part.

(c) Exhaust emission of particulate matter is measured using the California Regulations for New 1996 and Later Heavy-Duty Off-Road Diesel Cycle Engines. This procedure is incorporated by reference. See § 89.6.

(d) In lieu of the standard specified in paragraph (a)(1) of this section, manufacturers may elect to include engine families in the averaging, banking, and trading program, the provisions of which are specified in subpart C of this part. The manufacturer must set a family emission limit (FEL) not to exceed 14.6 grams per kilowatt hour. This FEL serves as the standard for that family.

§ 89.113–96 Smoke emission standard.

(a) Exhaust opacity from compression-ignition nonroad engines for which this subpart is applicable must not exceed:

(1) 20 percent during the acceleration mode;

(2) 15 percent during the lugging mode; and

(3) 50 percent during the peaks in either the acceleration or lugging modes.

(b) Opacity levels are to be measured and calculated as set forth in part 86, subpart I.

§ 89.114–96 Special test procedures.

(a) *Use of special test procedures by EPA.* The Administrator may, on the basis of written application by a manufacturer, establish special test procedures other than those set forth in this part, for any nonroad engine that the Administrator determines is not susceptible to satisfactory testing under the specified test procedures set forth in subpart E of this part or part 86, subpart I.

(b) *Use of alternate test procedures by manufacturer.*

(1) A manufacturer may elect to use an alternate test procedure provided that it yields equivalent results to the specified procedures, its use is approved in advance by the Administrator, and the basis for equivalent results with the specified test procedures is fully described in the manufacturer's application.

(2) The Administrator may reject data generated under alternate test procedures which do not correlate with data generated under the specified procedures.

§89.115–96 Application for certificate.

(a) For each engine family that complies with all applicable standards and requirements, the engine manufacturer must submit to the Administrator a completed application for a certificate of conformity.

(b) The application must be approved and signed by the authorized representative of the manufacturer.

(c) The application will be updated and corrected by amendment as provided for in §89.123–96 to accurately reflect the manufacturer's production.

(d) *Required content.* Each application must include the following information:

(1) A description of the basic engine design including, but not limited to, the engine family specifications, the provisions of which are contained in §89.116–96;

(2) An explanation of how the emission control system operates, including a detailed description of all emission control system components, each auxiliary emission control device (AECD), and all fuel system components to be installed on any production or test engine(s);

(3) Proposed test fleet selection and the rationale for the test fleet selection;

(4) Special or alternate test procedures, if applicable;

(5) The period of operation necessary to accumulate service hours on test engines and stabilize emission levels;

(6) A description of all adjustable operating parameters (including, but not limited to, injection timing and fuel rate), including the following:

(i) The nominal or recommended setting and the associated production tolerances;

(ii) The intended physically adjustable range;

(iii) The limits or stops used to establish adjustable ranges;

(iv) Production tolerances of the limits or stops used to establish each physically adjustable range; and

(v) Information relating to why the physical limits or stops used to establish the physically adjustable range of each parameter, or any other means used to inhibit adjustment, are effective in preventing adjustment of parameters to settings outside the manufacturer's intended physically adjustable ranges on in-use engines;

(7) For families participating in the averaging, banking, and trading program, the information specified in subpart C of this part;

(8) A description of the test equipment and fuel proposed to be used;

(9) All test data obtained by the manufacturer on each test engine;

(10) An unconditional statement certifying that all engines in the engine family comply with all requirements of this part and the Clean Air Act.

(e) At the Administrator's request, the manufacturer must supply such additional information as may be required to evaluate the application including, but not limited to, projected nonroad engine production.

(f)(1) The Administrator may modify the information submission requirements of paragraph (d) of this section, provided that all of the information specified therein is maintained by the engine manufacturer as required by §89.124–96, and amended, updated, or corrected as necessary.

(2) For the purposes of this paragraph, §89.124–96(a)(1) includes all information specified in paragraph (d) of this section whether or not such information is actually submitted to the Administrator for any particular model year.

(3) The Administrator may review an engine manufacturer's records at any time. At the Administrator's discretion, this review may take place either at the manufacturer's facility or at another facility designated by the Administrator.

[59 FR 31335, June 17, 1994, as amended at 61 FR 20741, May 8, 1996]

§89.116–96 Engine families.

(a) A manufacturer's product line is divided into engine families that are comprised of engines expected to have similar emission characteristics throughout their useful life periods.

(b) The following characteristics distinguish engine families:

(1) Fuel;

(2) Cooling medium;

(3) Method of air aspiration;

(4) Method of exhaust aftertreatment (for example, catalytic converter or particulate trap);

(5) Combustion chamber design;
(6) Bore;
(7) Stroke;
(8) Number of cylinders, (engines with aftertreatment devices only); and
(9) Cylinder arrangement (engines with aftertreatment devices only).

(c) Upon a showing by the manufacturer that the useful life period emission characteristics are expected to be similar, engines differing in one or more of the characteristics in paragraph (b) of this section may be grouped in the same engine family.

(d) Upon a showing by the manufacturer that the expected useful life period emission characteristics will be different, engines identical in all the characteristics of paragraph (b) of this section may be divided into separate engine families.

§ 89.117–96 Test fleet selection.

(a) The manufacturer must select for testing, from each engine family, the engine with the most fuel injected per stroke of an injector at maximum power.

(b) Each engine in the test fleet must be constructed to be representative of production engines.

(c) After review of the manufacturer's test fleet, the Administrator may select from the available fleet one additional test engine from each engine family.

§ 89.118–96 Service accumulation.

(a)(1) Each test engine in the test fleet must be operated with all emission control systems operating properly for a period sufficient to stabilize emissions.

(2) A manufacturer may elect to consider as stabilized emission levels from engines with no more than 125 hours of service.

(b) No maintenance, other than recommended lubrication and filter changes, may be performed during service accumulation without the Administrator's approval.

(c) Service accumulation should be performed in a manner using good engineering judgment to ensure that emissions are representative of in-use engines.

(d) The manufacturer must maintain, and provide to the Administrator if requested, records stating the rationale for selecting the service accumulation period and records describing the method used to accumulate service hours on the test engine(s).

§ 89.119–96 Emission tests.

(a) *Manufacturer testing.* (1) Upon completion of service accumulation, the manufacturer must test each test engine using the specified test procedures, except as provided in § 89.114–96. The procedures to be used are set forth in:

(i) Subpart E of this part;

(ii) The California Regulations for New 1996 and Later Heavy-Duty Off-Road Diesel Cycle Engines. This procedure has been incorporated by reference. See § 89.6; and

(iii) Part 86, subpart I of this chapter.

(2) Each test engine must be configured to be representative of actual in-use operation. The Administrator may specify the adjustment of any adjustable parameter. All test results must be reported to the Administrator.

(b) *Confirmatory testing.* The Administrator may conduct confirmatory testing or other testing on any test engine. The manufacturer must deliver test engines as directed by the Administrator. When the Administrator conducts confirmatory testing or other testing, those test results are used to determine compliance with emission standards.

(c) *Use of carryover test data.* In lieu of testing to certify an engine family for a given model year, the manufacturer may submit, with the Administrator's approval, emission test data used to certify that engine family in previous years. This ''carryover'' data is only allowable if the submitted test data show that the test engine would comply with the emission standard(s) for the model year for which certification is being sought.

(d) *Test fuels.* EPA may use the fuel specified in either Table 4 or Table 5 of appendix A to subpart D of this part in confirmatory testing or other testing on any test engine. Emission test results based on use of Table 5 fuel will be used to confirm compliance with HC, CO, NO_X, PM, and smoke standards. Emission test results based on Table 4 fuel will be used to confirm

compliance with HC, CO, NO_X, and smoke standards; when a manufacturer uses the fuel specified in Table 4 of appendix A to subpart D of this part for its certification testing, EPA has the option to use the PM emission result, corrected using the PM correction factor specified in §89.425–96, to confirm compliance with the PM standard.

§89.120–96 Compliance with emission standards.

(a) If all test engines representing an engine family have emissions less than or equal to each emission standard, that family complies with the emission standards.

(b) If any test engine representing an engine family has emissions greater than each emission standard, that family will be deemed not in compliance with the emission standard(s).

(c) If aftertreatment is employed by an engine family, then a deterioration factor must be determined and applied.

(d) For engine families included in the averaging, banking, and trading program, the families' emission limits (FELs) are used in lieu of the applicable federal emission standard.

§89.121–96 Certificate of conformity effective dates.

The certificate of conformity is valid from the date of issuance by EPA until 31 December of the model year or calendar year for which it is issued.

§89.122–96 Certification.

(a) If, after a review of the manufacturer's application, request for certificate, information obtained from any inspection, and such other information as the Administrator may require, the Administrator determines that the application is complete and that the engine family meets the requirements of this part and the Clean Air Act, the Administrator shall issue a certificate of conformity.

(b) If, after a review of the information described in paragraph (a) of this section, the Administrator determines that the requirements of this part and the Clean Air Act have not been met, the Administrator will deny certification. The Administrator must give a written explanation when certification is denied. The manufacturer may request a hearing on a denial.

§89.123–96 Amending the application and certificate of conformity.

(a) The manufacturer of nonroad compression-ignition engines must notify the Administrator when changes to information required to be described in the application for certification are to be made to a product line covered by a certificate of conformity. This notification must include a request to amend the application or the existing certificate of conformity. Except as provided in paragraph (e) of this section, the manufacturer shall not make said changes or produce said engines prior to receiving approval from EPA.

(b) A manufacturer's request to amend the application or the existing certificate of conformity shall include the following information:

(1) A full description of the change to be made in production or of the engine to be added;

(2) Engineering evaluations or data showing that engines as modified or added will comply with all applicable emission standards; and

(3) A determination whether the manufacturer's original test fleet selection is still appropriate, and if the original test fleet selection is determined not to be appropriate, proposed test fleet selection(s) representing the engines changed or added which would have been required if the engines had been included in the original application for certification.

(c) The Administrator may require the manufacturer to perform tests on the engine representing the engine to be added or changed.

(d) *Decision by Administrator.* (1) Based on the description of the proposed amendment and data derived from such testing as the Administrator may require or conduct, the Administrator will determine whether the proposed change or addition would still be covered by the certificate of conformity then in effect.

(2) If the Administrator determines that the change or new engine(s) meets the requirements of this subpart and the Act, the appropriate certificate of conformity is amended.

(3) If the Administrator determines that the changed or new engine(s) does not meet the requirements of this subpart and the Act, the certificate of conformity will not be amended. The Administrator shall provide a written explanation to the manufacturer of the decision not to amend the certificate. The manufacturer may request a hearing on a denial.

(e) A manufacturer may make changes in or additions to production engines concurrently with notifying the Administrator as required by paragraph (a) of this section, if the manufacturer complies with the following requirements:

(1) In addition to the information required in paragraph (b) of this section, the manufacturer must supply supporting documentation, test data, and engineering evaluations as appropriate to demonstrate that all affected engines will still meet applicable emission standards.

(2) If, after a review, the Administrator determines additional testing is required, the manufacturer must provide required test data within 30 days or cease production of the affected engines.

(3) If the Administrator determines that the affected engines do not meet applicable requirements, the Administrator will notify the manufacturer to cease production of the affected engines and to recall and correct at no expense to the owner all affected engines previously produced.

(4) Election to produce engines under this paragraph will be deemed to be a consent to recall all engines which the Administrator determines do not meet applicable standards and to cause such nonconformity to be remedied at no expense to the owner.

§ 89.124–96 Record retention, maintenance, and submission.

(a) The manufacturer of any nonroad compression-ignition engine must maintain the following adequately organized records:

(1) Copies of all applications filed with the Administrator.

(2) A detailed history of each test engine used for certification including the following:

(i) A description of the test engine's construction, including a general description of the origin and buildup of the engine, steps taken to ensure that it is representative of production engines, description of components specially built for the test engine, and the origin and description of all emission-related components;

(ii) A description of the method used for service accumulation, including date(s) and the number of hours accumulated;

(iii) A description of all maintenance, including modifications, parts changes, and other servicing performed, and the date(s) and reason(s) for such maintenance;

(iv) A description of all emission tests performed (except tests performed by the EPA directly) including routine and standard test documentation, as specified in subpart E of this part, date(s) and the purpose of each test;

(v) A description of all tests performed to diagnose engine or emission control performance, giving the date and time of each and the reason(s) for the test; and

(vi) A description of any significant event(s) affecting the engine during the period covered by the history of the test engine but not described by an entry under one of the previous paragraphs of this section.

(b) Routine emission test data, such as those reporting test cell temperature and relative humidity at start and finish of test and raw emission results from each mode or test phase, must be retained for a period of one year after issuance of all certificates of conformity to which they relate. All other information specified in paragraph (a) of this section must be retained for a period of eight years after issuance of all certificates of conformity to which they relate.

(c) Records may be kept in any format and on any media, provided that at the Administrator's request, organized, written records in English are promptly supplied by the manufacturer.

(d) The manufacturer must supply, at the Administrator's request, copies of any engine maintenance instructions

or explanations issued by the manufacturer.

§ 89.125–96 Production engines, annual report.

(a) Upon the Administrator's request, the manufacturer must supply a reasonable number of production engines for testing and evaluation. These engines must be representative of typical production and must be supplied for testing at such time and place and for such reasonable periods as the Administrator may require.

(b) The manufacturer must annually, within 30 days after the end of the model year, notify the Administrator of the number of engines produced by engine family, by gross power, by displacement, by fuel system, or by other categories as the Administrator may require.

§ 89.126–96 Denial, revocation of certificate of conformity.

(a) If, after review of the manufacturer's application, request for certification, information obtained from any inspection, and any other information the Administrator may require, the Administrator determines that one or more test engines do not meet applicable standards (or family emission limits, as appropriate), then the Administrator will notify the manufacturer in writing, setting forth the basis for this determination.

(b) Notwithstanding the fact that engines described in the application may comply with all other requirements of this subpart, the Administrator may deny the issuance of, suspend, or revoke a previously issued certificate of conformity if the Administrator finds any one of the following infractions to be substantial:

(1) The manufacturer submits false or incomplete information;

(2) The manufacturer denies an EPA enforcement officer or EPA authorized representative the opportunity to conduct authorized inspections;

(3) The manufacturer fails to supply requested information or amend its application to include all engines being produced;

(4) The manufacturer renders inaccurate any test data which it submits or otherwise circumvents the intent of the Act or this part;

(5) The manufacturer denies an EPA enforcement officer or EPA authorized representative reasonable assistance (as defined in § 89.129–96(e)).

(c) If a manufacturer knowingly commits an infraction specified in paragraph (b)(1) or (b)(4) of this section, knowingly commits any other fraudulent act which results in the issuance of a certificate of conformity, or fails to comply with the conditions specified in §§ 89.203–96(f), 89.206–96(d), 89.209–96(c) or 89.210–96(g), the Administrator may deem such certificate void ab initio.

(d) When the Administrator denies, suspends, revokes, or voids ab initio a certificate of conformity the manufacturer will be provided a written determination. The manufacturer may request a hearing under § 89.127–96 on the Administrator's decision.

(e) Any suspension or revocation of a certificate of conformity shall extend no further than to forbid the introduction into commerce of engines previously covered by the certification which are still in the hands of the manufacturer, except in cases of such fraud or other misconduct that makes the certification invalid ab initio.

§ 89.127–96 Request for hearing.

(a) A manufacturer may request a hearing on the Administrator's denial, suspension, voiding ab initio or revocation of a certificate of conformity.

(b) The manufacturer's request must be filed within 30 days of the Administrator's decision, be in writing, and set forth the manufacturer's objections to the Administrator's decision and data to support the objections.

(c) If, after review of the request and supporting data, the Administrator finds that the request raises a substantial and factual issue, the Administrator will grant the manufacturer's request for a hearing.

§ 89.128–96 Hearing procedures.

(a)(1) After granting a request for a hearing the Administrator shall designate a Presiding Officer for the hearing.

(2) The hearing will be held as soon as practicable at a time and place determined by the Administrator or by the Presiding Officer.

(3) The Administrator may, at his or her discretion, direct that all argument and presentation of evidence be concluded within a specified period established by the Administrator. Said period may be no less than 30 days from the date that the first written offer of a hearing is made to the manufacturer. To expedite proceedings, the Administrator may direct that the decision of the Presiding Officer (who may, but need not, be the Administrator) shall be the final EPA decision.

(b)(1) Upon appointment pursuant to paragraph (a) of this section, the Presiding Officer will establish a hearing file. The file shall consist of the following:

(i) The determination issued by the Administrator under § 89.126–96(d);

(ii) The request for a hearing and the supporting data submitted therewith;

(iii) All documents relating to the request for certification and all documents submitted therewith; and

(iv) Correspondence and other data material to the hearing.

(2) The hearing file will be available for inspection by the applicant at the office of the Presiding Officer.

(c) An applicant may appear in person or may be represented by counsel or by any other duly authorized representative.

(d)(1) The Presiding Officer, upon the request of any party or at his or her discretion, may arrange for a prehearing conference at a time and place he/she specifies. Such prehearing conference will consider the following:

(i) Simplification of the issues;

(ii) Stipulations, admissions of fact, and the introduction of documents;

(iii) Limitation of the number of expert witnesses;

(iv) Possibility of agreement disposing of any or all of the issues in dispute; and

(v) Such other matters as may aid in the disposition of the hearing, including such additional tests as may be agreed upon by the parties.

(2) The results of the conference shall be reduced to writing by the Presiding Officer and made part of the record.

(e)(1) Hearings shall be conducted by the Presiding Officer in an informal but orderly and expeditious manner. The parties may offer oral or written evidence, subject to the exclusion by the Presiding Officer of irrelevant, immaterial, and repetitious evidence.

(2) Witnesses will not be required to testify under oath. However, the Presiding Officer shall call to the attention of witnesses that their statements may be subject to the provisions of 18 U.S.C. 1001 which imposes penalties for knowingly making false statements or representations or using false documents in any matter within the jurisdiction of any department or agency of the United States.

(3) Any witness may be examined or cross-examined by the Presiding Officer, the parties, or their representatives.

(4) Hearings shall be reported verbatim. Copies of transcripts of proceedings may be purchased by the applicant from the reporter.

(5) All written statements, charts, tabulations, and similar data offered in evidence at the hearings shall, upon a showing satisfactory to the Presiding Officer of their authenticity, relevancy, and materiality, be received in evidence and shall constitute a part of the record.

(6) Oral argument may be permitted at the discretion of the Presiding Officer and shall be reported as part of the record unless otherwise ordered by the Presiding Officer.

(f)(1) The Presiding Officer shall make an initial decision which shall include written findings and conclusions and the reasons or basis regarding all the material issues of fact, law, or discretion presented on the record. The findings, conclusions, and written decision shall be provided to the parties and made a part of the record. The initial decision shall become the decision of the Administrator without further proceedings, unless there is an appeal to the Administrator or motion for review by the Administrator within 20 days of the date the initial decision was filed. If the Administrator has determined under paragraph (a) of this section that the decision of the Presiding Officer is final, there is no right of appeal to the Administrator.

(2) On appeal from or review of the initial decision, the Administrator shall have all the powers which he or she would have in making the initial decision, including the discretion to require or allow briefs, oral argument, the taking of additional evidence, or the remanding to the Presiding Officer for additional proceedings. The decision by the Administrator may adopt the original decision or shall include written findings and conclusions and the reasons or basis therefor on all the material issues of fact, law, or discretion presented on the appeal or considered in the review.

§ 89.129–96 Right of entry.

(a) Any manufacturer who has applied for certification of a new engine or engine family subject to certification testing under this subpart shall admit or cause to be admitted to any of the following facilities during operating hours any EPA enforcement officer or EPA authorized representative on presentation of credentials.

(1) Any facility where any such certification testing or any procedures or activities connected with such certification testing are or were performed;

(2) Any facility where any new engine which is being, was, or is to be tested is present;

(3) Any facility where any construction process or assembly process used in the modification or buildup of such an engine into a certification engine is taking place or has taken place; and

(4) Any facility where any record or other document relating to any of the above is located.

(b) Upon admission to any facility referred to in paragraph (a)(1) of this section, any EPA enforcement officer or EPA authorized representative shall be allowed:

(1) To inspect and monitor any part or aspect of such procedures, activities, and testing facilities, including, but not limited to, monitoring engine preconditioning, emission tests and service accumulation, maintenance, and engine storage procedures, and to verify correlation or calibration of test equipment;

(2) To inspect and make copies of any such records, designs, or other documents; and

(3) To inspect and photograph any part or aspect of any such certification engine and any components to be used in the construction thereof.

(c) To allow the Administrator to determine whether production engines conform in all material respects to the design specifications applicable to those engines, as described in the application for certification for which a certificate of conformity has been issued, any manufacturer shall admit any EPA enforcement officer or EPA authorized representative on presentation of credentials to:

(1) Any facility where any document, design, or procedure relating to the translation of the design and construction of engines and emission-related components described in the application for certification or used for certification testing into production engines is located or carried on; and

(2) Any facility where any engines to be introduced into commerce are manufactured or assembled.

(d) On admission to any such facility referred to in paragraph (c) of this section, any EPA enforcement officer or EPA authorized representative shall be allowed:

(1) To inspect and monitor any aspects of such manufacture or assembly and other procedures;

(2) To inspect and make copies of any such records, documents or designs; and

(3) To inspect and photograph any part or aspect of any such new engines and any component used in the assembly thereof that are reasonably related to the purpose of his or her entry.

(e) Any EPA enforcement officer or EPA authorized representative shall be furnished by those in charge of a facility being inspected with such reasonable assistance as he or she may request to help the enforcement officer or authorized representative discharge any function listed in this paragraph. Each applicant for or recipient of certification is required to cause those in charge of a facility operated for its benefit to furnish such reasonable assistance without charge to EPA whether or not the applicant controls the facility.

(1) Reasonable assistance includes, but is not limited to, clerical, copying,

interpretation and translation services; the making available on request of personnel of the facility being inspected during their working hours to inform the EPA enforcement officer or EPA authorized representative of how the facility operates and to answer the officer's questions; and the performance on request of emission tests on any engine which is being, has been, or will be used for certification testing. Such tests shall be nondestructive, but may require appropriate service accumulation.

(2) A manufacturer may be compelled to cause any employee at a facility being inspected to appear before an EPA enforcement officer or EPA authorized representative. The request for the employee's appearance shall be in writing, signed by the Assistant Administrator for Air and Radiation, and served on the manufacturer. Any employee who has been instructed by the manufacturer to appear will be entitled to be accompanied, represented, and advised by counsel.

(f) The duty to admit or cause to be admitted any EPA enforcement officer or EPA authorized representative applies whether or not the applicant owns or controls the facility in question and applies both to domestic and to foreign manufacturers and facilities. EPA will not attempt to make any inspections which it has been informed that local law forbids. However, if local law makes it impossible to do what is necessary to ensure the accuracy of data generated at a facility, no informed judgment that an engine is certifiable or is covered by a certificate can properly be based on those data. It is the responsibility of the manufacturer to locate its testing and manufacturing facilities in jurisdictions where this situation will not arise.

(g) Any entry without 24 hours prior written or oral notification to the affected manufacturer shall be authorized in writing by the Assistant Administrator for Enforcement.

Subpart C—Averaging, Banking, and Trading Provisions

§ 89.201–96 Applicability.

Nonroad compression-ignition engines subject to the provisions of subpart A of this part are eligible to participate in the averaging, banking, and trading program described in this subpart.

§ 89.202–96 Definitions.

The definitions in subpart A of this part apply to this subpart. The following definitions also apply to this subpart:

Averaging for nonroad engines means the exchange of emission credits among engine families within a given manufacturer's product line.

Banking means the retention of nonroad engine emission credits by the manufacturer generating the emission credits for use in future model year averaging or trading as permitted by these regulations.

Emission credits represent the amount of emission reduction or exceedance, by a nonroad engine family, below or above the emission standard, respectively. Emission reductions below the standard are considered as ''positive credits,'' while emission exceedances above the standard are considered as ''negative credits.'' In addition, ''projected credits'' refer to emission credits based on the projected applicable production/sales volume of the engine family. ''Reserved credits'' are emission credits generated within a model year waiting to be reported to EPA at the end of the model year. ''Actual credits'' refer to emission credits based on actual applicable production/sales volume as contained in the end-of-year reports submitted to EPA. Some or all of these credits may be revoked if EPA review of the end-of-year reports or any subsequent audit action(s) uncovers problems or errors.

Trading means the exchange of nonroad engine emission credits between manufacturers.

§ 89.203–96 General provisions.

(a) The averaging, banking, and trading program for NO_X emissions from eligible nonroad engines is described in this subpart. Participation in this program is voluntary.

(b) A nonroad engine family is eligible to participate in the averaging, banking, and trading program for NO_X emissions if it is subject to regulation

under subpart B of this part with certain exceptions specified in subsection (c) of this section. No averaging, banking, and trading program is available for meeting the HC, CO, PM, or smoke emission standards specified in subpart B of this part.

(c) Nonroad engines may not participate in the averaging, banking, and trading program if they are subject to state engine emission standards, are exported, or use an alternate or special test procedure under §89.114–96.

(d) A manufacturer may certify one or more nonroad engine families at family emission limits (FELs) above or below the applicable emission standard, provided the summation of the manufacturer's projected balance of all credit transactions in a given model year is greater than or equal to zero, as determined under §89.207–96.

(1) FELs for NO_X may not exceed 14.6 grams per kilowatt hour.

(2) An engine family certified to an FEL is subject to all provisions specified in subparts B, D, E, G, H, I, J, and K of this part, except that the applicable FEL replaces the NO_X emission standard for the family participating in the averaging, banking, and trading program.

(3) A manufacturer of an engine family with an FEL exceeding the applicable emission standard must obtain emission credits sufficient to address the associated credit shortfall via averaging, banking, or trading.

(4) An engine family with an FEL below the applicable standard may generate emission credits for averaging, banking, trading, or a combination thereof. Emission credits may not be used to offset an engine family's emissions that exceed its applicable FEL. Credits may not be used to remedy nonconformity determined by a Selective Enforcement Audit (SEA) or by recall (in-use) testing. However, in the case of an SEA failure, credits may be used to allow subsequent production of engines for the family in question if the manufacturer elects to recertify to a higher FEL.

(e) Credits generated in a given model year may be used in the following three model years. Credits not used by the end of the third model year after being generated are forfeited. Credits generated in one model year may not be used for prior model years.

(f) Manufacturers must demonstrate compliance under the averaging, banking, and trading program for a particular model year by 270 days after the model year. Engine families without an adequate amount of emission credits will violate the conditions of the certificates of conformity. The certificates of conformity may be voided ab initio under §89.126–96(c) for those engine families.

§89.204–96 Averaging.

(a) A manufacturer may use averaging to offset an emission exceedance of a nonroad engine family caused by an FEL above the applicable emission standard. Credits used in averaging may be obtained from credits generated by another engine family in the same model year, credits banked in the three previous model years, or credits obtained through trading.

(b) Credits scheduled to expire in the earliest model year must be used first, before using other available credits.

§89.205–96 Banking.

(a) A manufacturer of a nonroad engine family with an FEL below the applicable standard for a given model year may bank credits in that model year for use in averaging and trading in the following three model years. Credits not withdrawn within the three model years after they are banked are forfeited.

(b) A manufacturer of a nonroad engine family may bank credits up to one calendar year prior to the effective date of mandatory certification. Such engines must meet the requirements of subparts A, B, D, E, F, G, H, I, J, and K of this part.

(c) A manufacturer may bank actual credits only after the end of the model year and after EPA has reviewed the manufacturer's end-of-year reports. During the model year and before submittal of the end-of-year report, credits originally designated in the certification process for banking will be considered reserved and may be redesignated for trading or averaging in the end-of-year report and final report.

(d) Credits declared for banking from the previous model year that have not

been reviewed by EPA may be used in averaging or trading transactions. However, such credits may be revoked at a later time following EPA review of the end-of-year report or any subsequent audit actions.

§ 89.206–96 Trading.

(a) A nonroad engine manufacturer may exchange emission credits with other nonroad engine manufacturers in trading.

(b) Credits for trading can be obtained from credits banked in the three previous model years or credits generated during the model year of the trading transaction. Traded credits expire if they are not used in averaging within three model years following the model year in which they were generated.

(c) Traded credits can be used for averaging, banking, or further trading transactions.

(d) In the event of a negative credit balance resulting from a transaction, both the buyer and the seller are liable, except in cases involving fraud. Certificates of all engine families participating in a negative trade may be voided ab initio under § 89.126–96(c).

§ 89.207–96 Credit calculation.

For each participating engine family, emission credits (positive or negative) are to be calculated according to one of the following equations and rounded, in accordance with ASTM E29–90, to the nearest one-tenth of a megagram per hour (Mg/hr). ASTM E29–90 has been incorporated by reference. See § 89.6. Consistent units are to be used throughout the equation.

(a) For determining credit availability from all engine families generating credits:

$$\text{Emission credits} = (\text{Std} - \text{FEL}) \times (\text{Volume}) \times (\text{MinPR}) \times (10^{-6})$$

(b) For determining credit usage for all engine families requiring credits to offset emissions in excess of the standard:

$$\text{Emission credits} = (\text{Std} - \text{FEL}) \times (\text{Volume}) \times (\text{MaxPR}) \times (10^{-6})$$

Where:

Std=the current and applicable nonroad engine emission standard in grams per brake horsepower hour.

FEL=the family emission limit for the engine family in grams per brake horsepower hour.

Volume=the number of nonroad engines eligible to participate in the averaging, banking, and trading program within the given engine family during the model year. Quarterly production projections are used for initial certification. Actual applicable production/sales volumes is used for end-of-year compliance determination.

MinPR=the power rating of the configuration within an engine family with the lowest power rating.

MaxPR=the power rating of the configuration within an engine family with the highest power rating.

§ 89.208–96 Labeling.

For all nonroad engines included in the averaging, banking, and trading program, the family emission limit to which the engine is certified must be included on the label required in § 89.110–96.

§ 89.209–96 Certification.

(a) In the application for certification a manufacturer must:

(1) Declare its intent to include specific engine families in the averaging, banking, and trading program.

(2) Submit a statement that the engines for which certification is requested will not, to the best of the manufacturer's belief, cause the manufacturer to have a negative credit balance when all credits are calculated for all the manufacturer's engine families participating in the averaging, banking, and trading program.

(3) Declare an FEL for each engine family participating in averaging, banking, and trading.

(i) The FEL must be to the same number of significant digits as the emission standard.

(ii) In no case may the FEL exceed the upper limit prescribed in § 89.203–96(d).

(4) Indicate the projected number of credits generated/needed for this family; the projected applicable production/sales volume, by quarter; and the values required to calculate credits as given in § 89.207–96.

(5) Submit calculations in accordance with § 89.207–96 of projected emission credits (positive or negative) based on

quarterly production projections for each participating family.

(6)(i) If the engine family is projected to have negative emission credits, state specifically the source (manufacturer/engine family or reserved) of the credits necessary to offset the credit deficit according to quarterly projected production.

(ii) If the engine family is projected to generate credits, state specifically (manufacturer/engine family or reserved) where the quarterly projected credits will be applied.

(b) All certificates issued are conditional upon manufacturer compliance with the provisions of this subpart both during and after the model year of production.

(c) Failure to comply with all provisions of this subpart will be considered to be a failure to satisfy the conditions upon which the certificate was issued, and the certificate may be deemed void ab initio.

(d) The manufacturer bears the burden of establishing to the satisfaction of the Administrator that the conditions upon which the certificate was issued were satisfied or waived.

(e) Projected credits based on information supplied in the certification application may be used to obtain a certificate of conformity. However, any such credits may be revoked based on review of end-of-year reports, follow-up audits, and any other verification steps deemed appropriate by the Administrator.

§ 89.210–96 Maintenance of records.

(a) The manufacturer of any nonroad engine that is certified under the averaging, banking, and trading program must establish, maintain, and retain the following adequately organized and indexed records for each such engine produced:

(1) EPA engine family;

(2) Engine identification number;

(3) Engine model year and build date,

(4) Power rating;

(5) Purchaser and destination; and

(6) Assembly plant.

(b) The manufacturer of any nonroad engine family that is certified under the averaging, banking, and trading program must establish, maintain, and retain the following adequately organized and indexed records for each such family:

(1) EPA engine family;

(2) Family emission limit (FEL);

(3) Power rating for each configuration tested;

(4) Projected applicable production/sales volume for the model year; and

(5) Actual applicable production/sales volume for the model year.

(c) Any manufacturer producing an engine family participating in trading reserved credits must maintain the following records on a quarterly basis for each engine family in the trading program:

(1) The engine family;

(2) The actual quarterly and cumulative applicable production/sales volume;

(3) The value required to calculate credits as given in § 89.207–96;

(4) The resulting type and number of credits generated/required;

(5) How and where credit surpluses are dispersed; and

(6) How and through what means credit deficits are met.

(d) The manufacturer must retain all records required to be maintained under this section for a period of eight years from the due date for the end-of-model-year report. Records may be retained as hard copy or reduced to microfilm, ADP diskettes, and so forth, depending on the manufacturer's record retention procedure; provided, that in every case all information contained in the hard copy is retained.

(e) Nothing in this section limits the Administrator's discretion in requiring the manufacturer to retain additional records or submit information not specifically required by this section.

(f) Pursuant to a request made by the Administrator, the manufacturer must submit to the Administrator the information that the manufacturer is required to retain.

(g) EPA may void ab initio under § 89.126–96(c) a certificate of conformity for an engine family for which the manufacturer fails to retain the records required in this section or to provide such information to the Administrator upon request.

§ 89.211–96 End-of-year and final reports.

(a) End-of-year and final reports must indicate the engine family, the actual applicable production/sales volume, the values required to calculate credits as given in § 89.207–96, and the number of credits generated/required. Manufacturers must also submit how and where credit surpluses were dispersed (or are to be banked) and/or how and through what means credit deficits were met. Copies of contracts related to credit trading must be included or supplied by the broker, if applicable. The report shall include a calculation of credit balances to show that the summation of the manufacturer's use of credits results in a credit balance equal to or greater than zero.

(b) The applicable production/sales volume for end-of-year and final reports must be based on the location of the point of first retail sale (for example, retail customer, dealer, secondary manufacturer) also called the final product purchase location.

(c)(1) End-of-year reports must be submitted within 90 days of the end of the model year to: Director, Manufacturers Operations Division (6405–J), U.S. Environmental Protection Agency, 401 M Street SW., Washington, DC 20460.

(2) Final reports must be submitted within 270 days of the end of the model year to: Director, Manufacturers Operations Division (6405–J), U.S. Environmental Protection Agency, 401 M Street SW., Washington, DC 20460.

(d) Failure by a manufacturer participating in the averaging, banking, or trading program to submit any end-of-year or final reports in the specified time for all engines is a violation of sections 203(a)(1) and 213 of the Clean Air Act for each engine.

(e) A manufacturer generating credits for deposit only who fails to submit end-of-year reports in the applicable specified time period (90 days after the end of the model year) may not use the credits until such reports are received and reviewed by EPA. Use of projected credits pending EPA review is not permitted in these circumstances.

(f) Errors discovered by EPA or the manufacturer in the end-of-year report, including errors in credit calculation, may be corrected in the final report up to 270 days from the end of the model year.

(g) If EPA or the manufacturer determines that a reporting error occurred on an end-of-year or final report previously submitted to EPA under this section, the manufacturer's credits and credit calculations will be recalculated. Erroneous positive credits will be void except as provided in paragraph (h) of this section. Erroneous negative credit balances may be adjusted by EPA.

(h) If within 270 days of the end of the model year, EPA review determines a reporting error in the manufacturer's favor (that is, resulting in an increased credit balance) or if the manufacturer discovers such an error within 270 days of the end of the model year, the credits shall be restored for use by the manufacturer.

§ 89.212–96 Notice of opportunity for hearing.

Any voiding of the certificate under §§ 89.203–96(f), 89.206–96(d), 89.209–96(c) and 89.210–96(g) will be made only after the manufacturer concerned has been offered an opportunity for a hearing conducted in accordance with §§ 89.512 and 89.513 and, if a manufacturer requests such a hearing, will be made only after an initial decision by the Presiding Officer.

Subpart D—Emission Test Equipment Provisions

§ 89.301–96 Scope; applicability.

(a) This subpart describes the equipment required in order to perform exhaust emission tests on new nonroad compression-ignition engines subject to the provisions of subpart B of part 89.

(b) Exhaust gases, either raw or dilute, are sampled while the test engine is operated using an 8-mode test cycle on an engine dynamometer. The exhaust gases receive specific component analysis determining concentration of pollutant, exhaust volume, the fuel flow, and the power output during each mode. Emission is reported as grams per kilowatt hour (g/kw-hr). See subpart E of this part for a complete description of the test procedure.

(c) General equipment and calibration requirements are given in §89.304–96 through 89.324–96. Sections 89.325–96 through 89.331–96 set forth general test specifications.

(d) Additional information about system design, calibration methodologies, and so forth, for raw gas sampling can be found in part 86, subpart D of this chapter. Examples for system design, calibration methodologies, and so forth, for dilute exhaust gas sampling can be found in part 86, subpart N of this chapter.

§89.302–96 Definitions.

The definitions in subpart A of part 89 apply to this subpart. For terms not defined in part 89, the definitions in part 86, subparts A, D, I, and N apply to this subpart. The following definition also applies to this subpart.

Specific emissions, g/kW-hr, is expressed on the basis of observed gross brake power. When it is not possible to test the engine in the gross conditions, for example, if the engine and transmission form a single integral unit, the engine may be tested in the net condition. Power corrections from net to gross conditions will be allowed with prior approval of the Administrator.

§89.303–96 Symbols/abbreviations.

(a) The abbreviations in §86.094–3 or part 89.3 of this chapter apply to this subpart.

(b) The abbreviations in Table 1 in appendix A of this subpart apply to this subpart. Some abbreviations from §89.3 have been included for the convenience of the reader.

(c) The symbols in Table 2 in appendix A of this subpart apply to this subpart.

§89.304–96 Equipment required for gaseous emissions; overview.

(a) All engines subject to this subpart are tested for exhaust emissions. Engines are operated on dynamometers meeting the specification given in §89.306–96.

(b) The exhaust is tested for gaseous emissions using a raw gas sampling system as described in §89.412–96 or a constant volume sampling (CVS) system as described in §89.419–96. Both systems require analyzers (see paragraph (c) of this section) specific to the pollutant being measured.

(c) Analyzers used are a non-dispersive infrared (NDIR) absorption type for carbon monoxide and carbon dioxide analysis; paramagnetic (PMD), zirconia (ZRDO), or electrochemical type (ECS) for oxygen analysis; a heated flame ionization (HFID) type for hydrocarbon analysis; and a chemiluminescent detector (CLD) or heated chemiluminescent detector (HCLD) for oxides of nitrogen analysis. Sections 89.309–96 through 89.324–96 set forth a full description of analyzer requirements and specifications.

§89.305–96 Equipment measurement accuracy/calibration frequency.

The accuracy of measurements must be such that the maximum tolerances shown in Table 3 in appendix A of this subpart are not exceeded. Calibrate all equipment and analyzers according to the frequencies shown in Table 3 in appendix A of this subpart.

§89.306–96 Dynamometer specifications and calibration weights.

(a) *Dynamometer specifications.* The dynamometer test stand and other instruments for measurement of power output must meet the accuracy and calibration frequency requirements shown in Table 3 in appendix A of this subpart. The dynamometer must be capable of performing the test cycle described in §89.410–96.

(b) *Dynamometer calibration weights.* A minimum of six calibration weights for each range used are required. The weights must be spaced to reflect good engineering judgement such that they cover the range of weights required and must be traceable to within 0.5 percent of NIST weights. Laboratories located in foreign countries may certify calibration weights to local government bureau standards.

§89.307–96 Dynamometer calibration.

(a) If necessary, follow the dynamometer manufacturer's instructions for initial start-up and basic operating adjustments.

(b) Check the dynamometer torque measurement for each range used by the following method:

(1) Warm up the dynamometer following the dynamometer manufacturer's specifications.

(2) Determine the dynamometer calibration moment arm (a distance/weight measurement). Dynamometer manufacturer's data, actual measurement, or the value recorded from the previous calibration used for this subpart may be used.

(3) When calibrating the engine flywheel torque transducer, any lever arm used to convert a weight or a force through a distance into a torque must be in a horizontal position (±5 degrees).

(4) Calculate the indicated torque (IT) for each calibration weight to be used by:

IT = calibration weight (N) × calibration moment arm (m)

(5) Attach each calibration weight specified in § 89.306–96 to the moment arm at the calibration distance determined in paragraph (b)(2) of this section. Record the power measurement equipment response (N − m) to each weight.

(6) For each calibration weight, compare the torque value measured in paragraph (b)(5) of this section to the calculated torque determined in paragraph (b)(4) of this section.

(7) The measured torque must be within 2 percent of the calculated torque.

(8) If the measured torque is not within 2 percent of the calculated torque, adjust or repair the system. Repeat steps in paragraphs (b)(1) through (b)(6) of this section with the adjusted or repaired system.

(c) Optional. A master load-cell or transfer standard may be used to verify the torque measurement system.

(1) The master load-cell and read out system must be calibrated with weights at each test weight specified in § 89.306–96. The calibration weights must be traceable to within 0.1 percent of applicable national standards.

(2) Warm up the dynamometer following the equipment manufacturer's specifications.

(3) Attach the master load-cell and loading system.

(4) Load the dynamometer to a minimum of 6 equally spaced torque values as indicated by the master load-cell for each in-use range used.

(5) The in-use torque measurement must be within 2 percent of the torque measured by the master system for each load used.

(6) If the in-use torque is not within 2 percent of the master torque, adjust or repair the system. Repeat steps in paragraphs (c)(2) through (c)(5) of this section with the adjusted or repaired system.

(d) Calibrated resistors may not be used for engine flywheel torque transducer calibration, but may be used to span the transducer prior to engine testing.

(e) Perform other engine dynamometer system calibrations as dictated by good engineering practice.

§ 89.308–96 Sampling system requirements for gaseous emissions.

(a) For each component (pump, sample line section, filters, and so forth) in the heated portion of the sampling system that has a separate source of power or heating element, use engineering judgment to locate the coolest portion of that component and monitor the temperature at that location. If several components are within an oven, then only the surface temperature of the component with the largest thermal mass and the oven temperature need be measured.

(b) If water is removed by condensation, the sample gas temperature or sample dewpoint must be monitored either within the water trap or downstream. It may not exceed 7 °C.

§ 89.309–96 Analyzers required for gaseous emissions.

(a) *Analyzers.* The following instruments are required for analyzing the measured gases:

(1) *Carbon Monoxide (CO) analysis.* (i) The carbon monoxide analyzer must be of the non-dispersive infrared (NDIR) absorption type.

(ii) The use of linearizing circuits is permitted.

(2) *Carbon Dioxide (CO_2) analysis.* (i) The carbon dioxide analyzer must be of the non-dispersive infrared (NDIR) absorption type.

(ii) The use of linearizing circuits is permitted.

(3) *Oxygen (O_2) analysis.* Oxygen (O_2) analyzers may be of the paramagnetic

(PMD), zirconia (ZRDO) or electrochemical type (ECS).

(4) *Hydrocarbon (HC) analysis.* (i) The hydrocarbon analyzer must be of the heated flame ionization (HFID) type.

(ii) If the temperature of the exhaust gas at the sample probe is below 190 °C, the temperature of the valves, pipework, and so forth, must be controlled so as to maintain a wall temperature of 190 °C ± 11 °C. If the temperature of the exhaust gas at the sample probe is above 190 °C, the temperature of the valves, pipework, and so forth, must be controlled so as to maintain a wall temperature greater than 180 °C.

(iii) The oven must be capable of maintaining temperature within 2 °C of the set point.

(iv) Fuel and burner air must conform to the specifications in § 89.312–96.

(v) The percent of oxygen interference must be less than 3 percent, as specified in § 89.319–96(d).

(5) *Oxides of nitrogen (NO_X) analysis.* (i) This analysis device must consist of the subsequent items, following the sample probe, in the given order:

(A) Pipework, valves, and so forth, controlled so as to maintain a wall temperature above 60 °C.

(B) A NO_2 to NO converter. The NO_2 to NO converter efficiency must be at least 90 percent.

(C) An ice bath or other cooling device located after the NO_X converter.

(D) A chemiluminescent detector (CLD).

(ii) The quench interference must be less than 3.0 percent as measured in § 89.318–96.

(b) Other gas analyzers yielding equivalent results may be used with advance approval of the Administrator.

(c) The following requirements must be incorporated in each system used for testing under this subpart.

(1) Carbon monoxide and carbon dioxide measurements must be made on a dry basis (for raw exhaust measurement only). Specific requirements for the means of drying the sample can be found in § 89.309–96(e).

(2) Calibration or span gases for the NO_X measurement system must pass through the NO_2 to NO converter.

(d) The electromagnetic compatibility (EMC) of the equipment must be on a level as to minimize additional errors.

(e) *Gas drying.* Chemical dryers are not an acceptable method of removing water from the sample. Water removal by condensation is acceptable. A water trap performing this function and meeting the specifications in § 89.308–96(b) is an acceptable method. Means other than condensation may be used only with prior approval from the Administrator.

§ 89.310–96 Analyzer accuracy and specifications.

(a) *Measurement accuracy—general.* The analyzers must have a measuring range which allows them to measure the concentrations of the exhaust gas sample pollutants with the accuracies shown in Table 3 in Appendix A of this subpart.

(1) *Response time.* The analyzer response time must be measured and accounted for before recording of data begins.

(2) *Precision.* The precision of the analyzer must be, at worst, ±1 percent of full-scale concentration for each range used at or above 100 ppm (or ppmC) or ±2 percent for each range used below 100 ppm (or ppmC). The precision is defined as 2.5 times the standard deviation(s) of 10 repetitive responses to a given calibration or span gas.

(3) *Noise.* The analyzer peak-to-peak response to zero and calibration or span gases over any 10-second period must not exceed 2 percent of full-scale chart deflection on all ranges used.

(4) *Zero drift.* The analyzer zero-response drift during a 1-hour period must be less than 2 percent of full-scale chart deflection on the lowest range used. The zero-response is defined as the mean response including noise to a zero-gas during a 30-second time interval.

(5) *Span drift.* The analyzer span drift during a 1-hour period must be less than 2 percent of full-scale chart deflection on the lowest range used. The analyzer span is defined as the difference between the span-response and the zero-response. The span-response is defined as the mean response including noise to a span gas during a 30-second time interval.

(b) *Operating procedure for analyzers and sampling system.* Follow the start-up and operating instructions of the instrument manufacturer. Adhere to the minimum requirements given in § 89.314–96 to § 89.323–96.

(c) *Emission measurement accuracy—Bagged sampling.* (1) Good engineering practice dictates that exhaust emission sample analyzer readings below 15 percent of full-scale chart deflection should generally not be used.

(2) Some high resolution read-out systems, such as computers, data loggers, and so forth, can provide sufficient accuracy and resolution below 15 percent of full scale. Such systems may be used provided that additional calibrations are made to ensure the accuracy of the calibration curves. If a gas divider is used, the gas divider must conform to the accuracy requirements specified in § 89.312–96(c). The following procedure for calibration below 15 percent of full scale may be used:

(i) Span the full analyzer range using a top range calibration gas meeting the accuracy requirements of § 89.312–96(c).

(ii) Generate a calibration curve according to, and meeting the requirements of, §§ 89.319–96 through 89.323–96.

(iii) Select a calibration gas (a span gas may be used for calibrating the CO_2 analyzer) with a concentration midway between the two lowest calibration gases or non-zero gas divider increments. This gas must be ''named'' to an accuracy of ±2.0 percent of NIST gas standards, or other standards approved by the Administrator.

(iv) Using the calibration curve fitted to the points generated in paragraphs (c)(2)(i) and (ii) of this section, check the concentration of the gas selected in paragraph (c)(2)(iii) of this section. The concentration derived from the curve must be within ±2.3 percent (±2.8 percent for CO_2 span gas) of the original named gas concentration.

(v) Provided the requirements of paragraph (c)(2)(iv) of this section are met, use the gas divider with the gas selected in paragraph (c)(2)(iii) of this section and determine the remainder of the calibration points. Fit a calibration curve per §§ 89.319–96 through 89.322–96 of this chapter for the entire analyzer range.

(d) *Emission measurement accuracy—continuous sampling.* Analyzers used for continuous analysis must be operated such that the measured concentration falls between 15 and 100 percent of full-scale chart deflection. Exceptions to these limits are:

(1) The analyzer's response may be less than 15 percent or more than 100 percent of full scale if automatic range change circuitry is used and the limits for range changes are between 15 and 100 percent of full-scale chart deflection;

(2) The analyzer's response may be less than 15 percent of full scale if:

(i) Alternative (c)(2) of this section is used to ensure that the accuracy of the calibration curve is maintained below 15 percent; or

(ii) The full-scale value of the range is 155 ppm (or ppmC) or less.

§ 89.311–96 Analyzer calibration frequency.

(a) Prior to initial use and after major repairs, bench check each analyzer (see § 89.315–96).

(b) Calibrations are performed as specified in §§ 89.319–96 through 89.324–96.

(c) At least monthly, or after any maintenance which could alter calibration, the following calibrations and checks are performed.

(1) Leak check the vacuum side of the system (see § 89.316–96).

(2) Check that the analysis system response time has been measured and accounted for.

(3) Verify that the automatic data collection system (if used) meets the requirements found in Table 3 in appendix A of this subpart.

(4) Check the fuel flow measurement instrument to insure that the specifications in Table 3 in appendix A of this subpart are met.

(d) Verify that all NDIR analyzers meet the water rejection ratio and the CO_2 rejection ratio as specified in § 89.318–96.

(e) Verify that the dynamometer test stand and power output instrumentation meet the specifications in Table 3 in appendix A of this subpart.

§89.312–96 Analytical gases.

(a) The shelf life of all calibration gases must not be exceeded. The expiration date of the calibration gases stated by the gas manufacturer shall be recorded.

(b) *Pure gases.* The required purity of the gases is defined by the contamination limits given below. The following gases must be available for operation:

(1) Purified nitrogen (Contamination ≤ 1 ppm C, ≤ 1 ppm CO, ≤ 400 ppm CO_2, ≤ 0.1 ppm NO)

(2) Purified oxygen (Purity 99.5 percent vol O_2)

(3) Hydrogen-helium mixture (40 ± 2 percent hydrogen, balance helium) (Contamination ≤ 31 ppm C, ≤ 400 ppm CO)

(4) Purified synthetic air (Contamination ≤ 1 ppm C, ≤ 1 ppm CO, ≤ 400 ppm CO_2, ≤ 0.1 ppm NO) (Oxygen content between 18–21 percent vol.)

(c) *Calibration and span gases.* (1) Calibration gas values are to be derived from NIST Standard Reference Materials (SRM's) or other standardized gas samples and are to be single blends as listed in the following paragraph.

(2) Mixtures of gases having the following chemical compositions shall be available:

C_3H_8 and purified synthetic air (dilute measurements);

C_3H_8 and purified nitrogen (raw measurements);

CO and purified nitrogen;

NO_X and purified nitrogen (the amount of NO_2 contained in this calibration gas must not exceed 5 percent of the NO content);

CO_2 and purified nitrogen

(3) The true concentration of a span gas must be within ±2 percent of the NIST gas standard. The true concentration of a calibration gas must be within ±1 percent of the NIST gas standard. The use of precision blending devices (gas dividers) to obtain the required calibration gas concentrations is acceptable, provided that the blended gases are accurate to within ±1.5 percent of NIST gas standards, or other gas standards which have been approved by the Administrator. This accuracy implies that primary gases used (or blending) must be ''named'' to an accuracy of at least ±1 percent, traceable to NIST or other approved gas standards. All concentrations of calibration gas shall be given on a volume basis (volume percent or volume ppm).

(4) The gas concentrations used for calibration and span may also be obtained by means of a gas divider, either diluting with purified N_2 or diluting with purified synthetic air. The accuracy of the mixing device must be such that the concentration of the diluted gases may be determined to within ±2 percent.

(d) Oxygen interference check gases shall contain propane with 350 ppmC ±75 ppmC hydrocarbon. The concentration value shall be determined to calibration gas tolerances by chromatographic analysis of total hydrocarbons plus impurities or by dynamic blending. Nitrogen shall be the predominant diluent with the balance oxygen.

(e) Fuel for the FID shall be a blend of 40 percent ±2 percent hydrogen with the balance being helium. The mixture shall contain less than 1 ppm equivalent carbon response; 98 to 100 percent hydrogen fuel may be used with advance approval of the Administrator.

(f) *Hydrocarbon analyzer burner air.* The concentration of oxygen must be within 1 mole percent of the oxygen concentration of the burner air used in the latest oxygen interference check ($\%O_2I$). If the difference in oxygen concentration is greater than 1 mole percent, then the oxygen interference must be checked and, if necessary, the analyzer adjusted to meet the $\%O_2I$ requirements. The burner air must contain less than 2 ppmC hydrocarbon.

§89.313–96 Initial calibration of analyzers.

(a) *Warming-up time.* The warming-up time should be according to the recommendations of the manufacturer. If not specified, a minimum of two hours shall be allowed for warming up the analyzers.

(b) *NDIR and HFID analyzer.* The NDIR analyzer shall be tuned and maintained according to the instrument manufacturer's instructions. The combustion flame of the HFID analyzer shall be optimized in order to meet the specifications in §89.319–96(b)(2).

(c) *Zero setting and calibration.* (1) Using purified synthetic air (or nitrogen), the CO, CO_2, NO_X, and HC analyzers shall be set at zero.

(2) Introduce the appropriate calibration gases to the analyzers and the values recorded. The same gas flow rates shall be used as when sampling exhaust.

(d) *Rechecking of zero setting.* The zero setting shall be rechecked and the procedure described in paragraph (c) of this section repeated, if necessary.

§ 89.314–96 Pre- and post-test calibration of analyzers.

Each operating range used during the test shall be checked prior to and after each test in accordance with the following procedure. (A chronic need for parameter adjustment can indicate a need for instrument maintenance.):

(a) The calibration is checked by using a zero gas and a span gas whose nominal value is between 80 percent and 100 percent of full-scale, inclusive, of the measuring range.

(b) After the emission test a zero gas and the same span gas will be used for rechecking. The analysis will be considered acceptable if the difference between the two measuring results is less than 2 percent of full scale.

§ 89.315–96 Analyzer bench checks.

(a) Prior to initial use and after major repairs verify that each analyzer complies with the specifications given in Table 3 in appendix A of this subpart.

(b) If a stainless steel NO_2 to NO converter is used, condition all new or replacement converters. The conditioning consists of either purging the converter with air for a minimum of 4 hours or until the converter efficiency is greater than 90 percent. The converter must be at operational temperature while purging. Do not use this procedure prior to checking converter efficiency on in-use converters.

§ 89.316–96 Analyzer leakage and response time.

(a) *Vacuum side leak check.* (1) Any location within the analysis system where a vacuum leak could affect the test results must be checked.

(2) The maximum allowable leakage rate on the vacuum side is 0.5 percent of the in-use flow rate for the portion of the system being checked. The analyzer flows and bypass flows may be used to estimate the in-use flow rates.

(3) The sample probe and the connection between the sample probe and valve V2 (see Figure 1 in appendix B of this subpart) may be excluded from the leak check.

(b) *Pressure side leak check.* The maximum allowable leakage rate on the pressure side is 5 percent of the in-use flow rate.

(c) The response time shall be accounted for in all emission measurement and calculations.

§ 89.317–96 NO_X converter check.

(a) Prior to its introduction into service, and monthly thereafter, the chemiluminescent oxides of nitrogen analyzer shall be checked for NO_2 to NO converter efficiency. Figure 2 in appendix B of this subpart is a reference for the following paragraphs.

(b) Follow good engineering practices for instrument start-up and operation. Adjust the analyzer to optimize performance.

(c) Zero the oxides of nitrogen analyzer with zero-grade air or zero-grade nitrogen.

(d) Connect the outlet of the NO_X generator to the sample inlet of the oxides of nitrogen analyzer which has been set to the most common operating range.

(e) Introduce into the NO_X generator analyzer-system an NO-in-nitrogen (N_2) mixture with an NO concentration equal to approximately 80 percent of the most common operating range. The NO_2 content of the gas mixture shall be less than 5 percent of the NO concentration.

(f) With the oxides of nitrogen analyzer in the NO mode, record the concentration of NO indicated by the analyzer.

(g) Turn on the NO_X generator O_2 (or air) supply and adjust the O_2 (or air) flow rate so that the NO indicated by the analyzer is about 10 percent less than indicated in paragraph (b)(5) of this section. Record the concentration of NO in this $NO+O_2$ mixture.

(h) Switch the NO_X generator to the generation mode and adjust the generation rate so that the NO measured on the analyzer is 20 percent of that measured in paragraph (b)(5) of this section. There must be at least 10 percent unreacted NO at this point. Record the concentration of residual NO.

(i) Switch the oxides of nitrogen analyzer to the NO_X mode and measure total NO_X. Record this value.

(j) Switch off the NO_X generator but maintain gas flow through the system. The oxides of nitrogen analyzer will indicate the NO_X in the $NO+O_2$ mixture. Record this value.

(k) Turn off the NO_X generator O_2 (or air) supply. The analyzer will now indicate the NO_X in the original NO-in-N_2 mixture. This value should be no more than 5 percent above the value indicated in paragraph (b)(4) of this section.

(l) Calculate the efficiency of the NO_X converter by substituting the concentrations obtained into the following equation:

$$\text{percent efficiency} = \left(1 + \frac{a-b}{c-d}\right) \times 100$$

Where:

a=concentration obtained in paragraph (i),

b=concentration obtained in paragraph (j),

c=concentration obtained in paragraph (g),

d=concentration obtained in paragraph (h).

If converter efficiency is not greater than 90 percent, corrective action will be required.

§ 89.318–96 Analyzer interference checks.

(a) Gases present in the exhaust other than the one being analyzed can interfere with the reading in several ways. Positive interference occurs in NDIR and PMD instruments when the interfering gas gives the same effect as the gas being measured, but to a lesser degree. Negative interference occurs in NDIR instruments by the interfering gas broadening the absorption band of the measured gas and in CLD instruments by the interfering gas quenching the radiation. The interference checks described in this section are to be made initially and after any major repairs that could affect analyzer performance.

(b) *CO analyzer water and CO_2 interference checks.* Prior to its introduction into service and annually thereafter, the NDIR carbon monoxide analyzer shall be checked for response to water vapor and CO_2:

(1) Follow good engineering practices for instrument start-up and operation. Adjust the analyzer to optimize performance on the most sensitive range to be used.

(2) Zero the carbon monoxide analyzer with either zero-grade air or zero-grade nitrogen.

(3) Bubble a mixture of 3 percent CO_2 in N_2 through water at room temperature and record analyzer response.

(4) An analyzer response of more than 1 percent of full scale for ranges above 300 ppm full scale or more than 3 ppm on ranges below 300 ppm full scale requires corrective action. (Use of conditioning columns is one form of corrective action which may be taken.)

(c) *NO_X analyzer quench check.* The two gases of concern for CLD (and HCLD) analyzers are CO_2 and water vapor. Quench responses to these two gases are proportional to their concentrations and, therefore, require test techniques to determine quench at the highest expected concentrations experienced during testing.

(1) *NO_X analyzer CO_2 quench check.* A CO_2 span gas having a concentration of 80 percent to 100 percent of full scale of the maximum operating range used during testing shall be passed through the CO_2 NDIR analyzer and the value recorded as *a*. It is diluted approximately 50 percent with NO span gas and then passed through the CO_2 NDIR and CLD (or HCLD), with the CO_2 and NO values recorded as *b* and *c* respectively. The CO_2 shall then be shut off and only the NO span gas passed through the CLD (or HCLD) and the NO value recorded as *d*. Percent CO_2 quench shall be calculated as follows and shall not exceed 3 percent:

$$\%\,CO_2\ \text{quench} = 100 \times \left(1 - \frac{(c \times a)}{(d \times a) - (d \times b)}\right) \times (a / b)$$

Where:

a=Undiluted CO_2 concentration (percent)

b=Diluted CO2 concentration (percent)

c=Diluted NO concentration (ppm)

d=Undiluted NO concentration (ppm)

(2) *NO_X analyzer water quench check.* (i) This check applies to wet measurements only. An NO span gas having a concentration of 80 percent to 100 percent of full scale of a normal operating range shall be passed through the CLD (or HCLD) and the response recorded as *D*. The NO span gas shall then be bubbled through water at room temperature and passed through the CLD (or HCLD) and the analyzer response recorded as *AR*. Determine and record the analyzer absolute operating pressure and the bubbler water temperature. (It is important that the NO span gas contains minimal NO_2 concentration for this check. No allowance for absorption of NO_2 in water has been made in the following quench calculations.)

(ii) Calculations for water quench must consider dilution of the NO span gas with water vapor and scaling of the water vapor concentration of the mixture to that expected during testing. Determine the mixture's saturated vapor pressure (designated as *Pwb*) that corresponds to the bubbler water temperature. Calculate the water concentration (Z1, percent) in the mixture by the following equation:

$$Z1 = 100 \times \frac{Pwb}{GP}$$

where GP = analyzer operating pressure (Pa)

(iii) Calculate the expected dilute NO span gas and water vapor mixture concentration (designated as *D1*) by the following equation:

$$D1 = D \times \left(1 - \frac{Z1}{100}\right)$$

(iv) For diesel (compression-ignition) exhaust, the maximum raw or dilute exhaust water vapor concentration expected during testing (designated as *Wm*) can be estimated from the CO_2 span gas (designated as *A*) criteria in paragraph (c)(1) of this section and the assumption of a fuel atom H/C ratio of 1.8:1 as:

$$Wm(\%) = 0.9 \times A(\%)$$

Where:

A = undiluted CO_2 concentration.

Percent water quench shall not exceed 3 percent and shall be calculated by:

$$\%\text{Water Quench} = 100 \times \frac{D1 - AR}{D1} \times \frac{Wm}{Z1}$$

§ 89.319–96 Hydrocarbon analyzer calibration.

(a) The FID hydrocarbon analyzer shall receive the initial and periodic calibration as described in this section. The HFID used with petroleum-fueled diesel (compression-ignition) engines shall be operated to a set point ±5.5 °C between 185 and 197 °C.

(b) *Initial and periodic optimization of detector response.* Prior to introduction into service and at least annually thereafter, adjust the FID hydrocarbon analyzer for optimum hydrocarbon response as specified in this paragraph. Alternate methods yielding equivalent results may be used, if approved in advance by the Administrator.

(1) Follow good engineering practices for initial instrument start-up and basic operating adjustment using the appropriate fuel (see § 89.312–96(e)) and zero-grade air.

(2) One of the following procedures is required for FID or HFID optimization:

(i) The procedure outlined in Society of Automotive Engineers (SAE) paper No. 770141, ''Optimization of a Flame Ionization Detector for Determination of Hydrocarbon in Diluted Automotive Exhausts''; author, Glenn D. Reschke.

This procedure has been incorporated by reference. See § 89.6.

(ii) The HFID optimization procedures outlined in § 86.331–79 of this chapter.

(iii) Alternative procedures may be used if approved in advance by the Administrator.

(3) After the optimum flow rates have been determined, record them for future reference.

(c) *Initial and periodic calibration.* Prior to introduction into service and monthly thereafter, the FID or HFID hydrocarbon analyzer shall be calibrated on all normally used instrument ranges using the steps in this paragraph. Use the same flow rate and pressures as when analyzing samples. Calibration gases shall be introduced directly at the analyzer, unless the ''overflow'' calibration option of § 86.1310–90(b)(3)(i) of this chapter for the HFID is taken.

(1) Adjust analyzer to optimize performance.

(2) Zero the hydrocarbon analyzer with zero-grade air.

(3) Calibrate on each used operating range with propane-in-air (dilute) or propane-in-nitrogen (raw) calibration gases having nominal concentrations starting between 10–15 percent and increasing in at least six incremental steps to 90 percent of that range. The incremental steps are to be spaced to represent good engineering practice. For each range calibrated, if the deviation from a least-squares best-fit straight line is 2 percent or less of the value at each data point, concentration values may be calculated by use of a single calibration factor for that range. If the deviation exceeds 2 percent at any point, the best-fit non-linear equation which represents the data to within 2 percent of each test point shall be used to determine concentration.

(d) *Oxygen interference optimization.* Choose a range where the oxygen interference check gases will fall in the upper 50 percent. Conduct the test, as outlined in this paragraph, with the oven temperature set as required by the instrument manufacturer. Oxygen interference check gas specifications are found in § 89.312–96(d).

(1) Zero the analyzer.

(2) Span the analyzer with the purified synthetic air specified in § 89.312–96(b)(4).

(3) Recheck zero response. If it has changed more than 0.5 percent of full scale repeat paragraphs (d)(1) and (d)(2) of this section to correct problem.

(4) Introduce the 5 percent and 10 percent oxygen interference check gases.

(5) Recheck the zero response. If it has changed more ±1 percent of full scale, repeat the test.

(6) Calculate the percent of oxygen interference (designated as *percent* O_2I) for each mixture in paragraph (d)(4) of this section.

$$\text{percent } O_2I = \frac{(B-C)}{B}(100)$$

A=hydrocarbon concentration (ppmC) of the span gas used in paragraph (d)(2) of this section.

B=hydrocarbon concentration (ppmC) of the oxygen interference check gases used in paragraph (d)(4) of this section.

$$C = \text{analyzer response (ppmC)} = \frac{A}{D}$$

D=percent of full-scale analyzer response due to *A*.

(7) The percent of oxygen interference (designated as $\%O_2I$) must be less than ± 3.0 percent for all required oxygen interference check gases prior to testing.

(8) If the oxygen interference is greater than the specifications, incrementally adjust the air flow above and below the manufacturer's specifications, repeating paragraphs (d)(1) through (d)(7) of this section for each flow.

(9) If the oxygen interference is greater than the specification after adjusting the air flow, vary the fuel flow and thereafter the sample flow, repeating paragraphs (d)(1) through (d)(7) of this section for each new setting.

(10) If the oxygen interference is still greater than the specifications, repair or replace the analyzer, FID fuel, or burner air prior to testing. Repeat this section with the repaired or replaced equipment or gases.

§ 89.320–96 Carbon monoxide analyzer calibration.

(a) Calibrate the NDIR carbon monoxide as described in this section.

(b) *Initial and periodic interference check.* Prior to its introduction into service and annually thereafter, the NDIR carbon monoxide analyzer shall be checked for response to water vapor and CO_2 in accordance with § 318.96(b).

(c) *Initial and periodic calibration.* Prior to its introduction into service and monthly thereafter, the NDIR carbon monoxide analyzer shall be calibrated.

(1) Adjust the analyzer to optimize performance.

(2) Zero the carbon monoxide analyzer with either zero-grade air or zero-grade nitrogen.

(3) Calibrate on each used operating range with carbon monoxide-in-N_2 calibration gases having nominal concentrations starting between 10 and 15 percent and increasing in at least six incremental steps to 90 percent of that range. The incremental steps are to be spaced to represent good engineering practice. For each range calibrated, if the deviation from a least-squares best-fit straight line is 2 percent or less of the value at each data point, concentration values may be calculated by use of a single calibration factor for that range. If the deviation exceeds 2 percent at any point, the best-fit non-linear equation which represents the data to within 2 percent of each test point shall be used to determine concentration.

(d) The initial and periodic interference, system check, and calibration test procedures specified in part 86, subpart D of this chapter may be used in lieu of the procedures specified in this section.

§ 89.321–96 Oxides of nitrogen analyzer calibration.

(a) The chemiluminescent oxides of nitrogen analyzer shall receive the initial and periodic calibration described in this section.

(b) Prior to its introduction into service, and monthly thereafter, the chemiluminescent oxides of nitrogen analyzer is checked for NO_2 to NO converter efficiency according to § 89.317–96.

(c) *Initial and periodic calibration.* Prior to its introduction into service, and monthly thereafter, the chemiluminescent oxides of nitrogen analyzer shall be calibrated on all normally used instrument ranges. Use the same flow rate as when analyzing samples. Proceed as follows:

(1) Adjust analyzer to optimize performance.

(2) Zero the oxides of nitrogen analyzer with zero-grade air or zero-grade nitrogen.

(3) Calibrate on each normally used operating range with NO-in-N_2 calibration gases with nominal concentrations starting at between 10 and 15 percent and increasing in at least six incremental steps to 90 percent of that range. The incremental steps are to be spaced to represent good engineering practice. For each range calibrated, if the deviation from a least-squares best-fit straight line is 2 percent or less of the value at each data point, concentration values may be calculated by use of a single calibration factor for that range. If the deviation exceeds 2 percent at any point, the best-fit non-linear equation which represents the data to within 2 percent of each test point shall be used to determine concentration.

(d) The initial and periodic interference, system check, and calibration test procedures specified in part 86, subpart D of this chapter may be used in lieu of the procedures specified in this section.

§ 89.322–96 Carbon dioxide analyzer calibration.

(a) Prior to its introduction into service, and monthly thereafter, the NDIR carbon dioxide analyzer shall be calibrated as follows:

(1) Follow good engineering practices for instrument start-up and operation. Adjust the analyzer to optimize performance.

(2) Zero the carbon dioxide analyzer with either zero-grade air or zero-grade nitrogen.

(3) Calibrate on each normally used operating range with carbon dioxide-in-N_2 calibration or span gases having nominal concentrations starting between 10 and 15 percent and increasing in at least six incremental steps to 90 percent of that range. The incremental

steps are to be spaced to represent good engineering practice. For each range calibrated, if the deviation from a least-squares best-fit straight line is 2 percent or less of the value at each data point, concentration values may be calculated by use of a single calibration factor for that range. If the deviation exceeds 2 percent at any point, the best-fit non-linear equation which represents the data to within 2 percent of each test point shall be used to determine concentration.

(b) The initial and periodic interference, system check, and calibration test procedures specified in part 86, subpart D of this chapter may be used in lieu of the procedures in this section.

§89.323–96 NDIR analyzer calibration.

(a) *Detector optimization.* If necessary, follow the instrument manufacturer's instructions for initial start-up and basic operating adjustments.

(b) *Calibration curve.* Develop a calibration curve for each range used as follows:

(1) Zero the analyzer.

(2) Span the analyzer to give a response of approximately 90 percent of full-scale chart deflection.

(3) Recheck the zero response. If it has changed more than 0.5 percent of full scale, repeat the steps given in paragraphs (b)(1) and (b)(2) of this section.

(4) Record the response of calibration gases having nominal concentrations starting between 10 and 15 percent and increasing in at least six incremental steps to 90 percent of that range. The incremental steps are to be spaced to represent good engineering practice.

(5) Generate a calibration curve. The calibration curve shall be of fourth order or less, have five or fewer coefficients. If any range is within 2 percent of being linear a linear calibration may be used. Include zero as a data point. Compensation for known impurities in the zero gas can be made to the zero-data point. The calibration curve must fit the data points within 2 percent of point.

(6) Optional. A new calibration curve need not be generated if:

(i) A calibration curve conforming to paragraph (b)(5) of this section exists; or

(ii) The responses generated in paragraph (b)(4) of this section are within 1 percent of full scale or 2 percent of point, whichever is less, of the responses predicted by the calibration curve for the gases used in paragraph (b)(4) of this section.

(7) If multiple range analyzers are used, the lowest range used must meet the curve fit requirements below 15 percent of full scale.

§89.324–96 Calibration of other equipment.

Other test equipment used for testing shall be calibrated as often as required by the instrument manufacturer or as necessary according to good practice.

§89.325–96 Engine intake air temperature measurement.

(a) Engine intake air temperature measurement must be made within 122 cm of the engine. The measurement location must be made either in the supply system or in the air stream entering the supply system.

(b) The temperature measurements shall be accurate to within ±2 °C.

§89.326–96 Engine intake air humidity measurement.

(a) *Humidity conditioned air supply.* Air that has had its absolute humidity altered is considered humidity- conditioned air. For this type of intake air supply, the humidity measurements must be made within the intake air supply system and after the humidity conditioning has taken place.

(b) *Nonconditioned air supply procedure.* Humidity measurements in nonconditioned intake air supply systems must be made in the intake air stream entering the supply system. Alternatively, the humidity measurements can be measured within the intake air supply stream.

§89.327–96 Charge cooling.

For engines with an air-to-air intercooler (or any other low temperature charge air cooling device) between the turbocharger compressor and the intake manifold, follow SAE J1937. This

procedure has been incorporated by reference. See § 89.6. The temperature of the cooling medium and the temperature of the charge air shall be monitored and recorded.

§ 89.328–96 Inlet and exhaust restrictions.

(a) The manufacturer is liable for emission compliance over the full range of restrictions that are specified by the manufacturer for that particular engine.

(b) Perform testing at the following inlet and exhaust restriction settings.

(1) Equip the test engine with an air inlet system presenting an air inlet restriction at the upper limit at maximum air flow, as specified by the engine manufacturer for a clean air cleaner. A system representative of the installed engine may be used. In other cases a test shop system may be used.

(2) The exhaust backpressure must be at the upper limit at maximum declared power, as specified by the engine manufacturer. A system representative of the installed engine may be used. In other cases a test shop system may be used.

§ 89.329–96 Engine cooling system.

An engine cooling system is required with sufficient capacity to maintain the engine at normal operating temperatures as prescribed by the engine manufacturer.

§ 89.330–96 Lubricating oil and test fuels.

(a) *Lubricating oil.* Use the engine lubricating oil for testing that meets the requirements as specified by the manufacturer for a particular engine and intended usage. Record the specifications of the lubricating oil used for the test.

(b) *Test fuels.* (1) Use diesel fuels for testing which are clean and bright, with pour and cloud points adequate for operability. The diesel fuel may contain nonmetallic additives as follows: Cetane improver, metal deactivator, antioxidant, dehazer, antirust, pour depressant, dye, dispersant, and biocide.

(2) Use only petroleum fuel meeting the specifications in Table 4 in appendix A of this subpart, or substantially equivalent specifications approved by the Administrator, for exhaust emission testing. Alternatively, petroleum fuel meeting the specifications in Table 5 in appendix A of this subpart may be used in exhaust emission testing. The grade of diesel fuel used must be commercially designated as ''Type 2–D'' grade diesel fuel and recommended by the engine manufacturer. If the fuel specified in Table 4 in Appendix A of this subpart is used, the adjustment factor specified in § 89.425–96 may be applied to particulate emission values to account for the impact of sulfur in fuel on particulate emissions.

(c) Other fuels may be used for testing provided they meet the following qualifications:

(1) They are commercially available;

(2) Information acceptable to the Administrator is provided to show that only the designated fuel would be used in customer service;

(3) Use of a fuel listed under paragraph (b) of this section would have a detrimental effect on emissions or durability; and

(4) Fuel specifications are approved in writing by the Administrator prior to the start of testing.

(d) Report the specification range of the fuel to be used under paragraphs (b)(2) and (c)(1) through (c)(4) of this section in the application for certification in accordance with § 89.115–96 (a)(8).

§ 89.331–96 Test conditions.

(a) *General requirements.* Calculate all volumes and volumetric flow rates at standard conditions for temperature and pressure (0 °C and 101.3 kPa), and these conditions must be used consistently throughout all calculations.

(b) *Engine test conditions.* Measure the absolute temperature (designated as T and expressed in Kelvin) of the engine air at the inlet to the engine, and the dry atmospheric pressure (designated as p and expressed in kPa), and determine the parameter f according to the following provisions:

(1) Naturally aspirated and mechanically supercharged engines:

$$f = \frac{99}{p_s} \times \left(\frac{T}{298}\right)^{0.7}$$

(2) Turbocharged engine with or without cooling of inlet air:

$$f = \left(\frac{99}{p_s}\right)^{0.7} \times \left(\frac{T}{298}\right)^{1.5}$$

(c) For a test to be recognized as valid, the parameter *f* shall be between the limits as shown below:

$$0.98 < f < 1.02$$

APPENDIX A TO SUBPART D—TABLES

TABLE 1.—ABBREVIATIONS USED IN SUBPART D

CLD	Chemiluminescent detector.
CO	Carbon monoxide.
CO_2	Carbon dioxide.
HC	Hydrocarbons.
HCLD	Heated chemiluminescent detector.
HFID	Heated flame ionization detector.
NDIR	Non-dispersive infra-red analyzer.
NIST	National Institute for Standards and Testing.
NO	Nitric Oxide.
NO_2	Nitrogen Dioxide.
NOx	Oxides of nitrogen.
O_2	Oxygen.
PMD	Paramagnetic detector.
ZROD	Zirconiumdioxyde sensor.

TABLE 2.—SYMBOLS USED IN SUBPART D

Symbol	Term	Unit
Conc	Concentration (ppm by volume)	ppm
f	Engine specific parameter considering atmospheric conditions	
F_{FCB}	Fuel specific factor for the carbon balance calculation	
F_{FD}	Fuel specific factor for exhaust flow calculation on dry basis	
F_{FH}	Fuel specific factor representing the hydrogen to carbon ratio	
F_{FW}	Fuel specific factor for exhaust flow calculation on wet basis	
G_{AIRW}	Intake air mass flow rate on wet basis	kg/h
G_{AIRD}	Intake air mass flow rate on dry basis	kg/h
G_{EXHW}	Exhaust gas mass flow rate on wet basis	kg/h
G_{Fuel}	Fuel mass flow rate	kg/h
H	Absolute humidity (water content related to dry air)	g/kg
i	Subscript denoting an individual mode	
K_H	Humidity correction factor	
L	Percent torque related to maximum torque for the test mode	%
Mass	Pollutant mass flow	g/h
$n_{d,i}$	Engine speed (average at the i'th mode during the cycle)	1/min
P_s	Dry atmospheric pressure	kPa
P_d	Test ambient saturation vapor pressure at ambient temperature	kPa
P	Gross power output uncorrected	kW
P_{AUX}	Declared total power absorbed by auxiliaries fitted for the test	kW
P_M	Maximum power measured at the test speed under test conditions	kW
P_i	$P_i=P_{M,i}+P_{AUX,i}$	
P_B	Total barometric pressure (average of the pre-test and post-test values)	kPa
R_a	Relative humidity of the ambient air	%
S	Dynamometer setting	kW
T	Absolute temperature at air inlet	K
T_{be}	Air temperature after the charge air cooler (if applicable) (average)	K
T_{clout}	Coolant temperature outlet (average)	K
T_{Dd}	Absolute dewpoint temperature	K
$T_{d,i}$	Torque (average at the i'th mode during the cycle)	N-m
T_{SC}	Temperature of the intercooled air	K
$T_{ref.}$	Reference temperature	K
V_{EXHD}	Exhaust gas volume flow rate on dry basis	m^3/h
V_{AIRW}	Intake air volume flow rate on wet basis	m^3/h
P_B	Total barometric pressure	kPa
V_{EXHW}	Exhaust gas volume flow rate on wet basis	m^3/h
WF	Weighing factor.	
WF_E	Effective weighing factor.	

TABLE 3.—MEASUREMENT ACCURACY CALIBRATION FREQUENCY (MY96 AND LATER)

No.	Item	Permissible deviation from reading [1]		Calibration frequency
		Nonidle	Idle	
1	Engine speed	±2%	±2%	30 days.
2	Torque	±2%	±5%	30 days.
3	Fuel consumption	±1%	±5%	30 days.

TABLE 3.—MEASUREMENT ACCURACY CALIBRATION FREQUENCY (MY96 AND LATER)—Continued

No.	Item	Permissible deviation from reading [1]		Calibration frequency
		Nonidle	Idle	
4	Air consumption	±2%	±5%	As required.
5	Coolant temperature	±2 °K	Same	As required.
6	Lubricant temperature	±2 °K	Same	As required.
7	Exhaust backpressure	±5%	Same	As required.
8	Inlet depression	±5%	Same	As required.
9	Exhaust gas temperature	±15 °K	Same	As required.
10	Air inlet temperature (combustion air)	±2 °K	Same	As required.
11	Atmospheric pressure	±0.5%	Same	As required.
12	Humidity (combustion air) (relative)	±3.0%	Same	As required.
13	Fuel temperature	±2 °K	Same	As required.
14	Temperature with regard to dilution tunnel	±2 °K	Same	As required.
15	Dilution air humidity	±3% absolute	Same	As required.
16	HC analyzer	±2% [2]	Same	30 days.
17	CO analyzer	±2% [2]	Same	30 days.
18	NO_X analyzer	±2% [2]	Same	30 days.
19	NO_X converter efficiency check	90%	Same	30 days.
20	CO_2 analyzer	±2% [2]	Same	30 days.

[1] All accuracy requirements pertain to the final recorded value which is inclusive of the data acquisition system.
[2] If reading is under 100 ppm then the accuracy shall be ±2 ppm.

TABLE 4. TEST FUEL SPECIFICATIONS FOR MY96 AND LATER:FEDERAL SPECIFICATIONS

Item	Procedure (ASTM) [1]	Value (type 2–D)
Cetane	D613–86	42–50
Distillation range:		
IBP, °C	D86–90	171–204
10% point, °C	D86–90	204–235
50% point, °C	D86–90	243–283
90% point, °C	D86–90	293–332
EP, °C	D86–90	321–366
Gravity, API	D287–92	33–37
Total sulfur, %mass	D129–91 or D2622–92	>0.05—0.5
Hydrocarbon composition:		
Aromatics, %vol.	D1319–89	[2]10
Parafins,	D1319–89	(3)
Napthenes,		
Olefins,		
Flashpoint, °C (minimum)	D93–90	54
Viscosity @ 38 °C, Centistokes	D445–88	2.0–3.2

[1] All ASTM procedures in this table have been incorporated by reference. See § 89.6.
[2] Minimum.
[3] Remainder.

TABLE 5.—TEST FUEL SPECIFICATIONS FOR MY96 AND LATER: CALIFORNIA SPECIFICATIONS

Item	Procedure (ASTM) [1]	Value (type 2–D)
Cetane	D613–86	40–48
Distillation range:		
IBP, °C	D86–90	171–204
10% point, °C	D86–90	204–235
50% point, °C	D86–90	243–283
90% point, °C	D86–90	293–332
EP, °C	D86–90	321–366
Gravity, API	D287–92	33–37
Total sulfur, %mass	D129–91 or D2622–92	.03–.05
Hydrocarbon composition:		
Aromatics %vol.	D1319–89	10 [2]
Parafins	D1319–89	([3])
Napthenes		
Olefins		
Flashpoint, °C (minimum)	D93–90	54
Viscosity @ 38 °C, centistokes	D445–88	2.0–3.2

[1] All ASTM procedures in this table have been incorporated by reference. See § 89.6.
[2] Minimum.
[3] Remainder.

APPENDIX B TO SUBPART D—FIGURES

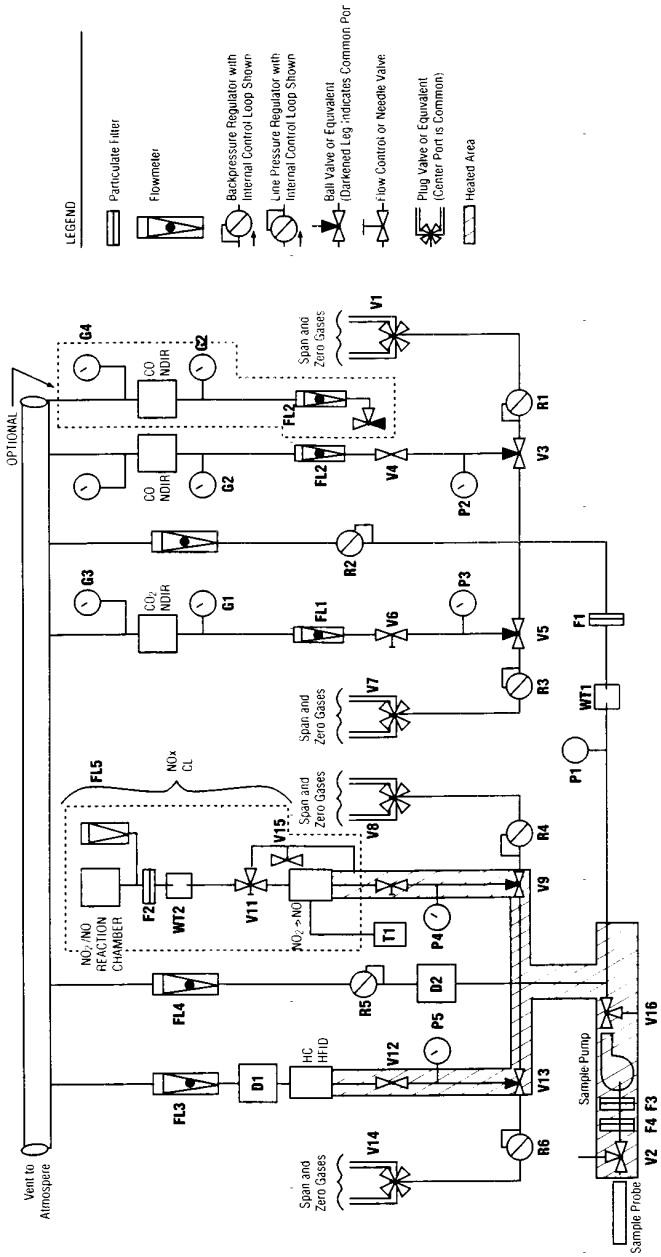

Figure 1. — Exhaust Gas Sampling and Analytical Train

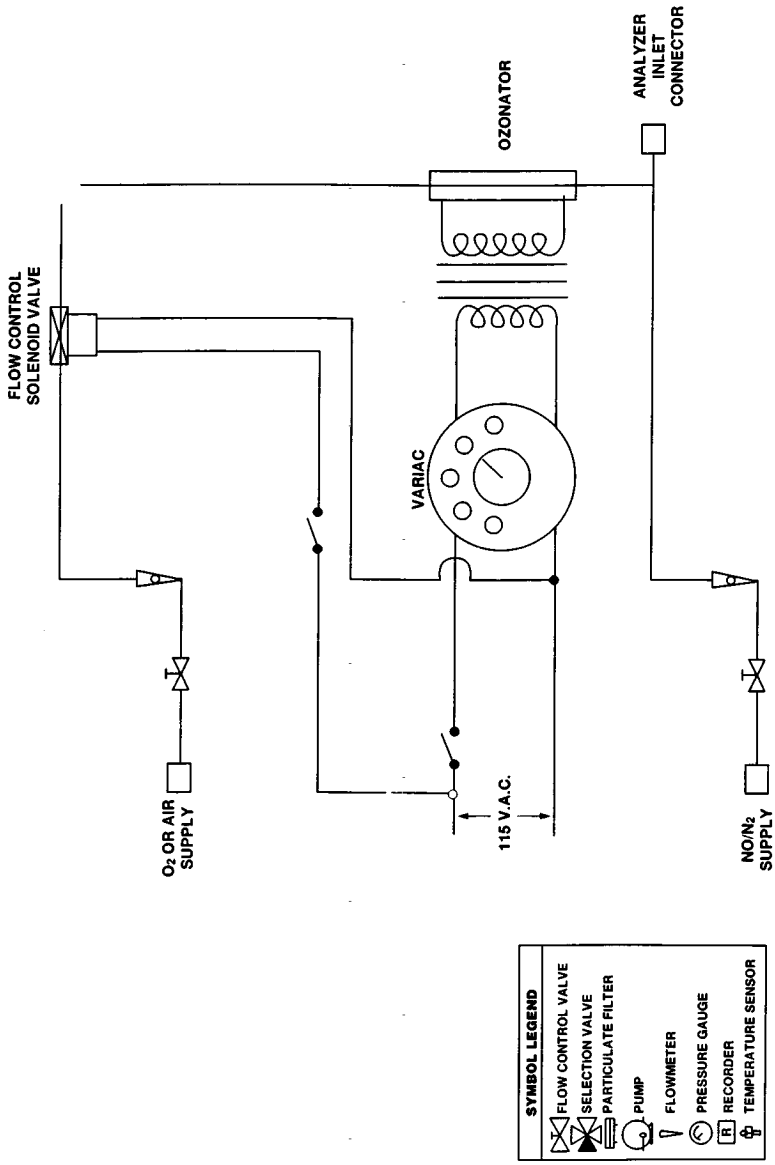

Figure 2. — NOx Converter Efficiency Detector

Subpart E—Exhaust Emission Test Procedures

§89.401–96 Scope; applicability.

(a) This subpart describes the procedures to follow in order to perform exhaust emission tests on new nonroad compression-ignition engines subject to the provisions of subpart B of this part.

(b) Exhaust gases, either raw or dilute, are sampled while the test engine is operated using an 8-mode test cycle on an engine dynamometer. The exhaust gases receive specific component analysis determining concentration of pollutant, exhaust volume, the fuel flow, and the power output during each mode. Emission is reported as grams per kilowatt hour (g/kW-hr).

(c) Requirements for emission test equipment and calibrating this equipment are found in subpart D of this part.

§89.402–96 Definitions.

The definitions in subpart A of this part apply to this subpart. For terms not defined in this part, the definitions in part 86, subparts A, D, I, and N of this chapter apply to this subpart. The following definition also applies to this subpart.

Specific emissions, (g/kW-hr), shall be expressed on the basis of observed gross power.

When it is not possible to test the engine in the gross conditions, for example, if the engine and transmission form a single integral unit, the engine may be tested in the net condition. Power corrections from net to gross conditions will be allowed with prior approval of the Administrator.

§89.403–96 Symbols/abbreviations.

(a) The abbreviations in §86.094–3 or §89.3 of this chapter apply to this subpart.

(b) The abbreviations in Table 1 in appendix A to subpart D also apply to this subpart. Some abbreviations from §89.3 have been included for the convenience of the reader.

(c) The symbols in Table 2 in appendix A to subpart D apply to this subpart.

§89.404–96 Test procedure overview.

(a) The test consists of prescribed sequences of engine operating conditions to be conducted on an engine dynamometer. The exhaust gases, generated raw or dilute during engine operation, are sampled for specific component analysis through the analytical train. The test is applicable to engines equipped with catalytic or direct-flame afterburners, induction system modifications, or other systems, or to uncontrolled engines.

(b) The test is designed to determine the brake-specific emissions of hydrocarbons, carbon monoxide, and oxides of nitrogen. The test consists of one idle mode, four power modes at one speed and three power modes at another speed. These procedures require the determination of the concentration of each pollutant, exhaust volume, the fuel flow, and the power output during each mode. The measured values are weighted and used to calculate the grams of each pollutant emitted per kilowatt hour (g/kW-hr).

(c)(1) When an engine is tested for exhaust emissions, the complete engine shall be tested with all emission control devices installed and functioning.

(2) On air-cooled engines, the fan shall be installed.

(3) Additional accessories (for example, oil cooler, alternators, or air compressors) may be installed but such accessory loading will be considered parasitic in nature and observed power shall be used in the emission calculation.

(d) All emission control systems installed on or incorporated in the application must be functioning during all procedures in this subpart. In cases of component malfunction or failure, maintenance to correct component failure or malfunction must be authorized in accordance with §86.094–25 of this chapter.

(e) The engine must be equipped with an electrical generation device typical of one used in customer service (such as an alternator). The power drain from it must be no greater than what is sufficient to operate the engine on the test stand.

§ 89.405–96 Recorded information.

(a) The information described in this section must be recorded, where applicable, for each test.

(b) *Engine description and specification.* A copy of the information specified in this paragraph must accompany each engine sent to the Administrator for compliance testing. The manufacturer need not record the information specified in this paragraph for each test if the information, with the exception of paragraphs (b)(3) and (b)(9) of this section, is included in the manufacturer's application for certification.

(1) Engine-system combination.

(2) Engine identification numbers.

(3) Number of hours of operation accumulated on engine.

(4) Rated maximum horsepower and torque.

(5) Maximum horsepower and torque speeds.

(6) Engine displacement.

(7) Governed speed.

(8) Idle rpm.

(9) Fuel consumption at maximum power and torque.

(10) Maximum air flow.

(11) Air inlet restriction.

(12) Exhaust pipe diameter(s).

(13) Maximum exhaust system backpressure.

(c) *Test data; general.*

(1) Engine-system combination.

(2) Engine identification number.

(3) Instrument operator.

(4) Engine operator.

(5) Number of hours of operation accumulated on the engine prior to beginning the warm-up portion of the test.

(6) Fuel identification.

(7) Date of most recent analytical assembly calibration.

(8) All pertinent instrument information such as tuning, gain, serial numbers, detector number, and calibration curve numbers. As long as this information is available for inspection by the Administrator, it may be summarized by system number or analyzer identification numbers.

(d) *Test data; pre-test.*

(1) Date and time of day.

(2) Test number.

(3) Barometric pressure, pre-test segment.

(4) Engine intake humidity, pre-test segment for compression-ignition engines with non-conditioned air supply systems.

(5) Maximum observed torque for intermediate and rated speeds.

(6) Recorder chart or equivalent. Identify for each test segment zero traces for each range used, and span traces for each range used.

(7) Air temperature after and pressure drop across the charge air cooler (if applicable) at maximum observed torque and rated speed.

(e) *Test data; modal.*

(1) Recorder chart or equivalent. Identify for each test mode the emission concentration traces and the associated analyzer range(s). The start and finish of each test.

(2) Observed engine torque.

(3) Observed engine rpm.

(4) Record engine torque and engine rpm continuously with a chart recorder or equivalent recording device.

(5) Intake air flow and depression for each mode.

(6) Engine intake air temperature for each mode.

(7) Mass fuel flow for each mode.

(8) Engine intake humidity.

(9) Coolant temperature outlet.

(10) Engine fuel inlet temperature, location to be representative of in-use as specified by each manufacturer.

(f) *Test data; post-test.*

(1) Recorder chart or equivalent. Identify the zero traces for each range used and the span traces for each range used. Identify hangup check, if performed.

(2) Total number of hours of operation accumulated on the engine.

(3) Barometric pressure, post-test segment.

(4) Engine intake humidity, post-test segment for compression-ignition engines with non-conditioned air supply systems.

§ 89.406–96 Pre-test procedures.

(a) Allow a minimum of 30 minutes warmup in the standby or operating mode prior to spanning the analyzers.

(b) Replace or clean the filter elements and then vacuum leak check the system per § 89.316–96(a). A pressure leak check is also permitted per § 89.316–96(b). Allow the heated sample

line, filters, and pumps to reach operating temperature.

(c) Perform the following system checks:

(1) Check the sample-line temperature (see §86.310–79 of this chapter for raw test procedures or §86.1310–90 of this chapter for dilute test procedures).

(2) Check that the system response time has been accounted for prior to sample collection data recording.

(3) A hang-up check is permitted, but is optional.

(d) Check analyzer zero and span at a minimum before and after each test. Further, check analyzer zero and span any time a range change is made or at the maximum demonstrated time span for stability for each analyzer used.

(e) Check system flow rates and pressures.

§89.407–96 Engine dynamometer test run.

(a) Measure and record the temperature of the air supplied to the engine, the fuel temperature at the pump inlet, and the observed barometric pressure.

(b) The governor and fuel system shall have been adjusted to provide engine performance at the levels reported in the application for certification required under §89.115–96.

(c) The following steps are taken for each test:

(1) Install instrumentation and sample probes as required.

(2) Perform the pre-test procedure as specified in §89.406–96.

(3) Read and record the general test data as specified in §89.405–96(c).

(4) Start cooling system.

(5) Precondition (warm up) the engine in the following manner:

(i) Operate the engine at idle for 2 to 3 minutes;

(ii) Operate the engine at approximately 50 percent power at the peak torque speed for 5 to 7 minutes;

(iii) Operate the engine at rated speed and maximum horsepower for 25 to 30 minutes;

(iv) Optional. It is permitted to precondition the engine at rated speed and maximum horsepower until the oil and water temperatures are stabilized. The temperatures are defined as stabilized if they are maintained within ±2 °C for 2 minutes. The engine must be operated a minimum of 10 minutes for this option. This optional procedure may be substituted for the procedure in paragraph (c)(5)(iii) of this section;

(v) Optional. If the engine has been operating on service accumulation for a minimum of 40 minutes, the service accumulation may be substituted for the procedure in paragraphs (c)(5)(i) through (iii) of this section.

(6) Read and record all pre-test data specified in §89.405–96(d).

(7) Start the test cycle (see §89.410–96) within 20 minutes of the end of the warmup. (See paragraph (c)(13) of this section.)

(8) During the first mode calculate the torque corresponding to 75, 50, and 10 percent of the maximum observed torque for the rated speed.

(9) During the fifth mode calculate the torque corresponding to 75 and 50 percent of the maximum observed torque for the intermediate speed.

(10) Record all modal data specified in §89.405–96(e) during a minimum of the last 60 seconds of each mode.

(11) Record the analyzer(s) response to the exhaust gas during the a minimum of the last 60 seconds of each mode.

(12) Test modes may be repeated, as long as the engine is preconditioned by running the previous mode.

(13) If a delay of more than 20 minutes occurs between the end of one mode and the beginning of another mode, the test is void. If the delay is under four hours, the test may be restarted without preconditioning (begin at the point in the procedure described at paragraph (c)(6) of this section). If the delay exceeds 4 hours, the test shall include preconditioning (begin at paragraph (c)(2) of this section).

(14) The engine speed and torque must be measured within the accuracy requirements of Table 3 (in appendix A to subpart D), and maintained within the requirements of Table 1 (in appendix B to this subpart) during a minimum of the last 60 seconds of each mode.

(15) If at any time during a test mode, the test equipment malfunctions or the specifications in paragraph (c)(14) of this section are not met, the test mode is void and may be aborted.

The test mode may be restarted without preconditioning (begin with paragraph (c)(6) of this section).

(16) Fuel flow and air flow during the idle load condition may be determined just prior to or immediately following the dynamometer sequence, if longer times are required for accurate measurements.

(d) *Exhaust gas measurements.* (1) Measure HC, CO, CO_2, and NO_X concentration in the exhaust sample.

(2) Each analyzer range that may be used during a test mode must have the zero and span responses recorded prior to the execution of that test mode. Only the zero and span for the range(s) used to measure the emissions during a test mode are required to be recorded after the completion of the test mode.

(3) It is permissible to change filter elements between test modes.

(4) A leak check is permitted between test segments.

(5) A hangup check is permitted between test segments.

(6) If, during the emission measurement portion of a test segment, the value of the gauges downstream of the NDIR analyzer(s) *G3* or *G4* (see Figure 1 in appendix B to subpart D) differs by more than ±0.5 kPa from the pretest value, the test segment is void.

§ 89.408–96 Post-test procedures.

(a) A hangup check is recommended at the completion of the last test mode using the following procedure:

(1) Within 30 seconds introduce a zero-grade gas or room air into the sample probe or valve *V2* (see Figure 1 in appendix B to subpart D) to check the ''hangup zero'' response. Simultaneously start a time measurement.

(2) Select the lowest HC range used during the test.

(3) Within four minutes of beginning the time measurement in paragraph (a)(1) of this section, the difference between the span-zero response and the hangup zero response shall not be greater than 5.0 percent of full scale or 10 ppmC whichever is greater.

(b) Begin the analyzer span checks within 6 minutes after the completion of the last mode in the test. Record for each analyzer the zero and span response for each range used during the preceding test or test segment.

(c) If during the test, the filter element(s) were replaced or cleaned, a vacuum check must be performed per § 89.316–96(a) immediately after the span checks. If the vacuum side leak check does not meet the requirements of § 89.316–96(a), the test is void.

(d) Record the post-test data specified in § 89.405–96(f).

(e) For a valid test, the analyzer drift between the before-mode and after-mode span checks for each analyzer must meet the following requirements:

(1) The span drift (defined as the change in the difference between the zero response and the span response) must not exceed 2 percent of full-scale chart deflection for each range used.

(2) The zero response drift must not exceed 2 percent of full-scale chart deflection for each range used above 155 ppm (or ppmC) or 3 percent of full-scale chart deflection for each range below 155 ppm (or ppmC).

§ 89.409–96 Data logging.

(a) A computer or any other automatic data processing device(s) may be used as long as the system meets the requirements of this subpart.

(b) Determine from the data collection records the analyzer responses corresponding to the end of each mode.

(c) Record data at a minimum of once every 5 seconds.

(d) Determine the final value for CO_2, CO, HC, and NO_X concentrations by averaging the concentration of each point taken during the sample period for each mode.

(e) For purposes of this section, calibration data includes calibration curves, linearity curves, span-gas responses, and zero-gas responses.

§ 89.410–96 Engine test cycle.

(a) The 8-mode cycle (see Table 1 in appendix B to this subpart) shall be followed in dynamometer operation tests of compression-ignition nonroad engines.

(b) During each non-idle mode, hold the specified speed and load to within ±2 percent of point. During each idle mode, speed must be held within the manufacturer's specifications for the engine, and the throttle must be in the fully closed position and torque must

not exceed 5 percent of the peak torque value of mode 5.

(c) If the operating conditions specified in paragraph (b) of this section for modes 2, 3, 4, 6, and 7 cannot be maintained, the Administrator may authorize deviations from the specified load conditions. Such deviations shall not exceed 10 percent of the maximum torque at the test speed. The minimum deviations, above and below the specified load, necessary for stable operation shall be determined by the manufacturer and approved by the Administrator prior to the test run.

(d) Power generated during the idle mode may not be included in the calculation of emission results.

§89.411–96 Exhaust sample procedure—gaseous components.

(a) *Automatic data collection equipment requirements.* The analyzer response may be read by automatic data collection (ADC) equipment such as computers, data loggers, and so forth. If ADC equipment is used, the following is required:

(1) For bag sample analysis, the analyzer response must be stable at greater than 99 percent of the final reading for the dilute exhaust sample bag. A single value representing the average chart deflection over a 10-second stabilized period shall be stored.

(2) For continuous analysis systems, a single value representing the average integrated concentration over a cycle shall be stored.

(3) The chart deflections or average integrated concentrations required in paragraphs (a)(1) and (a)(2) of this section may be stored on long-term computer storage devices such as computer tapes, storage discs, punch cards, and so forth, or they may be printed in a listing for storage. In either case a chart recorder is not required and records from a chart recorder, if they exist, need not be stored.

(4) If ADC equipment is used to interpret analyzer values, the ADC equipment is subject to the calibration specifications of the analyzer as if the ADC equipment is part of analyzer system.

(b) Data records from any one or a combination of analyzers may be stored as chart recorder records.

(c) *Bag sample analysis.* For bag sample analysis perform the following sequence:

(1) Warm up and stabilize the analyzers; clean and/or replace filter elements, conditioning columns (if used), and so forth, as necessary.

(2) Obtain a stable zero reading.

(3) Zero and span the analyzers with zero and span gases. The span gases must have concentrations between 75 and 100 percent of full-scale chart deflection. The flow rates and system pressures during spanning shall be approximately the same as those encountered during sampling. A sample bag may be used to identify the required analyzer range.

(4) Recheck zero response. If this zero response differs from the zero response recorded in paragraph (c)(3) of this section by more than 1 percent of full scale, then paragraphs (c)(2), (c)(3), and (c)(4) of this section must be repeated.

(5) If a chart recorder is used, identify and record the most recent zero and span response as the pre-analysis values.

(6) If ADC equipment is used, electronically record the most recent zero and span response as the pre-analysis values.

(7) Measure HC, CO, CO_2, and NO_X background concentrations in the sample bag(s) with approximately the same flow rates and pressures used in paragraph (c)(3) of this section. (Constituents measured continuously do not require bag analysis.)

(8) A post-analysis zero and span check of each range must be performed and the values recorded. The number of events that may occur between the pre- and post-analysis checks is not specified. However, the difference between pre-analysis zero and span values (recorded in paragraph (c)(5) or (c)(6) of this section) versus those recorded for the post-analysis check may not exceed the zero drift limit or the span drift limit of 2 percent of full-scale chart deflection for any range used. Otherwise the test is void.

(d) *Continuous sample analysis.* For continuous sample analysis perform the following sequence:

(1) Warm up and stabilize the analyzers; clean and/or replace filter elements, conditioning columns (if used), and so forth, as necessary.

(2) Leak check portions of the sampling system that operate at negative gauge pressures when sampling, and allow heated sample lines, filters, pumps, and so forth to stabilize at operating temperature.

(3) Optional: Perform a hangup check for the HFID sampling system:

(i) Zero the analyzer using zero air introduced at the analyzer port.

(ii) Flow zero air through the overflow sampling system. Check the analyzer response.

(iii) If the overflow zero response exceeds the analyzer zero response by 2 percent or more of the HFID full-scale deflection, hangup is indicated and corrective action must be taken.

(iv) The complete system hangup check specified in paragraph (e) of this section is recommended as a periodic check.

(4) Obtain a stable zero reading.

(5) Zero and span each range to be used on each analyzer operated prior to the beginning of the test cycle. The span gases shall have a concentration between 75 and 100 percent of full-scale chart deflection. The flow rates and system pressures shall be approximately the same as those encountered during sampling. The HFID analyzer shall be zeroed and spanned through the overflow sampling system.

(6) Re-check zero response. If this zero response differs from the zero response recorded in paragraph (d)(5) of this section by more than 1 percent of full scale, then paragraphs (d)(4), (d)(5), and (d)(6) of this section must be repeated.

(7) If a chart recorder is used, identify and record the most recent zero and span response as the pre-analysis values.

(8) If ADC equipment is used, electronically record the most recent zero and span response as the pre-analysis values.

(9) Collect background HC, CO, CO_2, and NO_X in a sample bag (for dilute exhaust sampling only, see § 89.420–96).

(10) Perform a post-analysis zero and span check for each range used at the conditions specified in paragraph (d)(5) of this section. Record these responses as the post-analysis values.

(11) Neither the zero drift nor the span drift between the pre-analysis and post-analysis checks on any range used may exceed 3 percent for HC, or 2 percent for NO_X, CO, and CO_2, of full scale chart deflection, or the test is void. (If the HC drift is greater than 3 percent of full-scale chart deflection, hydrocarbon hangup is likely.)

(12) Determine background levels of NO_X, CO, or CO_2 (for dilute exhaust sampling only) by the bag sample technique outlined in paragraph (c) of this section.

(e) *Hydrocarbon hangup.* If HC hangup is indicated, the following sequence may be performed:

(1) Fill a clean sample bag with background air.

(2) Zero and span the HFID at the analyzer ports.

(3) Analyze the background air sample bag through the analyzer ports.

(4) Analyze the background air through the entire sample probe system.

(5) If the difference between the readings obtained is 2 ppm or more, clean the sample probe and the sample line.

(6) Reassemble the sample system, heat to specified temperature, and repeat the procedure in paragraphs (e)(1) through (e)(6) of this section.

§ 89.412–96 Raw gaseous exhaust sampling and analytical system description.

(a) *Schematic drawing.* An example of a sampling and analytical system which may be used for testing under this subpart is shown in Figure 1 in appendix B to subpart D. All components or parts of components that are wetted by the sample or corrosive calibration gases shall be either chemically cleaned stainless steel or inert material, for example, polytetrafluoroethylene resin. The use of ''gauge savers'' or ''protectors'' with nonreactive diaphragms to reduce dead volumes is permitted.

(b) *Sample probe.* (1) The sample probe shall be a straight, closed-end, stainless steel, multi-hole probe. The inside diameter shall not be greater than the inside diameter of the sample line plus 0.03 cm. The wall thickness of the

probe shall not be greater than 0.10 cm. The fitting that attaches the probe to the exhaust pipe shall be as small as practical in order to minimize heat loss from the probe.

(2) The probe shall have a minimum of three holes. The spacing of the radial planes for each hole in the probe must be such that they cover approximately equal cross-sectional areas of the exhaust duct. See Figure 1 in appendix A to this subpart. The angular spacing of the holes must be approximately equal. The angular spacing of any two holes in one plane may not be 180° ±20° (that is, section view C-C of Figure 1 in appendix A to this subpart). The holes should be sized such that each has approximately the same flow. If only three holes are used, they may not all be in the same radial plane.

(3) The probe shall extend radially across the exhaust duct. The probe must pass through the approximate center and must extend across at least 80 percent of the diameter of the duct.

(c) *Sample transfer line.* (1) The maximum inside diameter of the sample line shall not exceed 1.32 cm.

(2) If valve *V2* is used, the sample probe must connect directly to valve *V2*. The location of optional valve *V2* may not be greater than 1.22 m from the exhaust duct.

(3) The location of optional valve *V16* may not be greater than 61 cm from the sample pump. The leakage rate for this section on the pressure side of the sample pump may not exceed the leakage rate specification for the vacuum side of the pump.

(d) *Venting.* All vents, including analyzer vents, bypass flow, and pressure relief vents of regulators, should be vented in such a manner to avoid endangering personnel in the immediate area.

(e) Any variation from the specifications in this subpart including performance specifications and emission detection methods may be used only with prior approval by the Administrator.

(f) Additional components, such as instruments, valves, solenoids, pumps, switches, and so forth, may be employed to provide additional information and coordinate the functions of the component systems.

(g) The following requirements must be incorporated in each system used for raw testing under this subpart.

(1) The sample for all components shall be taken with one sample probe, except as allowed under §89.413–96, and internally split to the different analyzers.

(2) The sample transport system from the engine exhaust pipe to the HC analyzer and the NO_X analyzer must be heated as indicated in Figure 1 in appendix B of subpart D.

§89.413–96 Raw sampling procedures.

Follow these procedures when sampling for gaseous emissions.

(a) The gaseous emission sampling probe must be installed at least 0.5 m or 3 times the diameter of the exhaust pipe—whichever is the larger—upstream of the exit of the exhaust gas system.

(b) In the case of a multi-cylinder engine with a branched exhaust manifold, the inlet of the probe shall be located sufficiently far downstream so as to ensure that the sample is representative of the average exhaust emissions from all cylinders.

(c) In multi-cylinder engines having distinct groups of manifolds, such as in a ''Vee'' engine configuration, it is permissible to:

(1) Sample after all exhaust pipes have been connected together into a single exhaust pipe.

(2) For each mode, sample from each exhaust pipe and average the gaseous concentrations to determine a value for each mode.

(3) Sample from all exhaust pipes simultaneously with the sample lines connected to a common manifold prior to the analyzer. It must be demonstrated that the flow rate through each individual sample line is ±4 percent of the average flow rate through all the sample lines.

(4) Use another method, if it has been approved in advance by the Administrator.

(d) All heated sampling lines shall be fitted with a heated filter to extract solid particles from the flow of gas required for analysis. The sample line for CO, CO_2, and O_2 analysis may be heated or unheated.

(e) If the composition of the exhaust gas is influenced by any treatment such as heat exchanger or air injection (except catalysts and soot filters) then the exhaust probe must be taken upstream of this device.

§ 89.414–96 Air flow measurement specifications.

(a) The air flow measurement method used must have a range large enough to accurately measure the air flow over the engine operating range during the test. Overall measurement accuracy must be ±2 percent of the reading for all modes except the idle mode. For the idle mode, the measurement accuracy shall be ±5 percent or less of the reading. The Administrator must be advised of the method used prior to testing.

(b) When an engine system incorporates devices that affect the air flow measurement (such as air bleeds) that result in understated exhaust emission results, corrections to the exhaust emission results shall be made to account for such effects.

§ 89.415–96 Fuel flow measurement specifications.

The fuel flow rate measurement instrument must have a minimum accuracy of ±1 percent of full-scale flow rate for each measurement range used. An exception is allowed at the idle point. For this mode (idle), the minimum accuracy is ±2 percent of full-scale flow rate for the measurement range used. The controlling parameters are the elapsed time measurement of the event and the weight or volume measurement.

§ 89.416–96 Raw exhaust gas flow.

The exhaust gas flow shall be determined by one of the methods described in this section and conform to the tolerances of Table 3 in appendix A to subpart D:

(a) Measurement of the air flow and the fuel flow by suitable metering systems (for details see SAE J244. This procedure has been incorporated by reference. See § 89.6.) and calculation of the exhaust gas flow as follows:

$G_{EXHW}=G_{AIRW}+G_{FUEL}$ (for wet exhaust mass)

or

$V_{EXHD}=V_{AIRD}+(-.767)\times G_{FUEL}$ (for dry exhaust volume)

or

$V_{EXHW}=V_{AIRW}+.749\times G_{FUEL}$ (for wet exhaust volume)

(b) Exhaust mass calculation from fuel consumption (see § 89.415–96) and exhaust gas concentrations using the method found in § 89.418–96.

§ 89.417–96 Data evaluation for gaseous emissions.

For the evaluation of the gaseous emission recording, the last 60 seconds of each mode are recorded, and the average values for HC, CO, CO_2, and NO_X during each mode are determined from the average concentration readings determined from the corresponding calibration data.

§ 89.418–96 Raw emission sampling calculations.

(a) The final test results shall be derived through the steps described in this section.

(b) The exhaust gas flow rate G_{EXHW} and V_{EXHW} shall be determined (see § 89.416–96) for each mode.

(c) When applying G_{EXHW} the measured concentration shall be converted to a wet basis according to the following formula, if not already measured on a wet basis.

$$K_W = \left[1 - F_{FH} \times \frac{G_{fuel}}{G_{air}}\right] - K_{W1} \text{ only applicable for raw exhaust}$$

F_{FH}=1.783 if air/fuel ratio is 1.00
1.865 if air/fuel ratio is 1.35
1.920 if air/fuel ratio is 3.50

(d) As the NO_X emission depends on ambient air conditions, the NO_X concentration shall be corrected for ambient air temperature and humidity with the factor K_H given in the following formulas. Equation (1) of this paragraph is to be used when testing in uncontrolled dynamometer rooms or at other sites with uncontrolled temperatures and humidities. Equation (2) of this paragraph is to be used for all testing when performed in controlled condition rooms. For engines operating on alternative combustion cycles, other correction formulas may be used if they can be justified or validated.

(1) For compression-ignition engines operating in uncontrolled conditions:

$$K_H = \frac{1}{1 + A(H - 10.71) + B(T - 298)}$$

Where:
A=0.309 (f/a) − 0.0266
B=-0.209 (f/a)+0.00954
T=temperature of the air in K
H=humidity of the inlet air in grams of water per kilogram of dry air in which:

$$H = \frac{6.220 \times R_a \times p_d}{(p_B - p_d) \times R_a \times 10^{-2}}$$

(2) For compression-ignition engines operating in controlled conditions:

$$K_H = \frac{1}{(1 - 0.0182(H - 10.71))}$$

If required the dry fuel/air ratio may be calculated from the following equation: Where:

$$(f/a)\ \text{Stoich} = \frac{M_c + aM_H}{138.18(1 + a/4)}$$

$$X = \frac{DCO_2}{10^2} + \frac{DCO}{10^6} + \frac{DHC}{10^6}$$

$$K = 3.5$$

(e) The pollutant mass flow for each mode shall be calculated as follows:

Gas mass = u×Gas conc.×G_{EXHW}
Gas mass = v×Gas conc.×V_{EXHD}
Gas mass = w×Gas conc.×V_{EXHW}

The coefficients u (wet), v (dry), and w (wet) are to be used according to the following table:

Gas	u	v	w	Conc.
NO_X	0.001587	0.00205	0.00205	ppm.
CO	0.000966	0.00125	0.00125	ppm.
HC	0.000478		0.000618	ppm.
CO_2	15.19	19.64	19.64	percent.
O_2	11.05	14.29	14.29	percent.

NOTE: The given coefficients u, v, and w are calculated for 273.15 °K (0 °C) and 101.3 kPa. In cases where the reference conditions vary from those stated, an error may occur in the calculations.

(f) The following equations may be used to calculate the coefficients u, v, and w in paragraph (e) of this section for other conditions of temperature and pressure.

(1) For ideal gases at 273.15 °K (0 °C) and 101.3 kPa:

For the calculation of u, v, and w for NO_X (as NO_2), CO, HC (in paragraph (e) of this section as $H_{1.85}$; CO_2; O_2

w=4.4615.10^{-5} * M if conc. in ppm
w=4.4615.10^{-1} * M if conc. in percent
v=w
u=w/P_{Air}
M=Molecular weight
p_{Air}=Density of dry air at 273.15 °K (0 °C), 101.3 kPa=1.293 kg/m^3

(2) For real gases at 273.15 °K (0 °C) and 101.3 kPa: For the calculation of u, v, and w

w=gas×10^{-6} if conc. in ppm
v=w
u = w/p_{Air}
p_{Gas} = Density of measured gas at 0 °C, 101.3 kPas in g/m^3

(3) General formulas for the calculation of concentrations at temperature (designated as T) and pressure (designated as p):

—for ideal gases

$$\text{conc}\frac{g}{m_3} = \frac{M}{M_v} \times \frac{T_o}{T_o + T} \times \frac{P}{P_o} \quad \frac{\text{Conc(ppm)}}{10^6}$$

—for real gases

$$\text{conc}\frac{g}{m_3} = \rho_{Gas} \times \frac{T_o}{T_o + T} \times \frac{P}{P_o} \quad \frac{\text{Conc(ppm)}}{10^6}$$

with:

1% = 10^4 ppm

M = Molecular weight in g/Mo1

M_v = Molecular Volume = 22.414×10^{-3} m^3/Mol for ideal gases

$T_\bullet$ = reference temperature 273.15 K

$p_\bullet$ = reference pressure 101.3 kPa

T = Temperature in °C

p = pressure in kPa

p_{Gas} = Density of the measured gas at 0 °C, 101.3 kPa

Conc. = Gas concentration

(g) The emission shall be calculated for all individual components in the following way:

$$\text{individual gas} = \frac{\sum_{i=1}^{i=n} \text{Gas Mass}_i \times WF_i}{\sum_{i=1}^{i=n-1} P_i \times WF_i}$$

The weighting factors and the number of modes (n) used in the above calculation are according to § 89.410–96.

§ 89.419–96 Dilute gaseous exhaust sampling and analytical system description.

(a) *General.* The exhaust gas sampling system described in this section is designed to measure the true mass of gaseous emissions in the exhaust of petroleum-fueled nonroad compression-ignition engines. This system utilizes the CVS concept (described in § 86.1310–90 of this chapter) of measuring mass emissions of HC, CO, and CO_2. A continuously integrated system is required for HC and NO_X measurement and is allowed for all CO and CO_2 measurements. The mass of gaseous emissions is determined from the sample concentration and total flow over the test period. As an option, the measurement of total fuel mass consumed over a cycle may be substituted for the exhaust measurement of CO_2. General requirements are as follows:

(1) This sampling system requires the use of a PDP–CVS and a heat exchanger or a CFV–CVS with either a heat exchanger or electronic flow compensation. Figure 2 in appendix A to this subpart is a schematic drawing of the PDP–CVS system. Figure 3 in appendix A to this subpart is a schematic drawing of the CFV–CVS system.

(2) The HC analytical system for petroleum-fueled compression-ignition engines requires a heated flame ionization detector (HFID) and heated sample system (191 ±11 °C).

(i) The HFID sample must be taken directly from the diluted exhaust stream through a heated probe and integrated continuously over the test cycle. Unless compensation for varying flow is made, the HFID must be used with a constant flow system to ensure a representative sample.

(ii) The heated probe shall be located in the primary dilution tunnel and far enough downstream of the mixing chamber to ensure a uniform sample distribution across the CVS duct at the point of sampling.

(3) The CO and CO_2 analytical system requires:

(i) Bag sampling (see § 86.1309–90 of this chapter) and analytical capabilities (see § 86.1311–90 of this chapter), as shown in Figure 2 and Figure 3 in appendix A to this subpart; or

(ii) Continuously integrated measurement of diluted CO and CO_2 meeting

the minimum requirements and technical specifications contained in paragraph (b)(4) of this section. Unless compensation for varying flow is made, a constant flow system must be used to ensure a representative sample.

(4) The NO_X analytical system requires a continuously integrated measurement of diluted NO_X meeting the minimum requirements and technical specifications contained in paragraph (b)(4) of this section. Unless compensation for varying flow is made, a constant flow system must be used to ensure a representative sample.

(5) Since various configurations can produce equivalent results, exact conformance with these drawings is not required. Additional components such as instruments, valves, solenoids, pumps, and switches may be used to provide additional information and coordinate the functions of the component systems. Other components, such as snubbers, which are not needed to maintain accuracy on some systems, may be excluded if their exclusion is based upon good engineering judgment.

(6) Other sampling and/or analytical systems may be used if shown to yield equivalent results and if approved in advance by the Administrator.

(b) *Component description.* The components necessary for exhaust sampling shall meet the following requirements:

(1) *Exhaust dilution system.* The PDP–CVS shall conform to all of the requirements listed for the exhaust gas PDP–CVS in § 86.1309–90(b) of this chapter. The CFV–CVS shall conform to all of the requirements listed for the exhaust gas CFV–CVS in § 86.1309–90(c) of this chapter. In addition, the CVS must conform to the following requirements:

(i) The flow capacity of the CVS must be sufficient to maintain the diluted exhaust stream at or below the temperature required for the measurement of hydrocarbon emissions noted in the following paragraph and to prevent condensation of water at any point in the dilution tunnel.

(ii) The flow capacity of the CVS must be sufficient to maintain the diluted exhaust stream in the primary dilution tunnel at a temperature of 191 °C or less at the sampling zone for hydrocarbon measurement and as required to prevent condensation at any point in the dilution tunnel. Gaseous emission samples may be taken directly from this sampling point.

(iii) For the CFV–CVS, either a heat exchanger or electronic flow compensation is required (see Figure 3 in appendix A to this subpart).

(iv) For the CFV–CVS when a heat exchanger is used, the gas mixture temperature, measured at a point immediately ahead of the critical flow venturi, shall be within ±11 °C) of the average operating temperature observed during the test with the simultaneous requirement that condensation does not occur. The temperature measuring system (sensors and readout) shall have an accuracy and precision of ±2 °C. For systems utilizing a flow compensator to maintain proportional flow, the requirement for maintaining constant temperature is not necessary.

(v) The primary dilution air shall have a temperature of 25 °C ±5 °C.

(2) *Continuous HC measurement system.* (i) The continuous HC sample system (as shown in Figure 2 or 3 in appendix A to this subpart) uses an ''overflow'' zero and span system. In this type of system, excess zero or span gas spills out of the probe when zero and span checks of the analyzer are made. The ''overflow'' system may also be used to calibrate the HC analyzer per § 86.1321–90(b) of this chapter, although this is not required.

(ii) No other analyzers may draw a sample from the continuous HC sample probe, line or system, unless a common sample pump is used for all analyzers and the sample line system design reflects good engineering practice.

(iii) The overflow gas flow rates into the sample line shall be at least 105 percent of the sample system flow rate.

(iv) The overflow gases shall enter the heated sample line as close as practical to the outside surface of the CVS duct or dilution tunnel.

(v) The continuous HC sampling system shall consist of a probe (which must raise the sample to the specified temperature) and, where used, a sample transfer system (which must maintain the specified temperature). The continuous hydrocarbon sampling system (exclusive of the probe) shall:

(A) Maintain a wall temperature of 191 °C ±11 °C as measured at every separately controlled heated component (that is, filters, heated line sections), using permanent thermocouples located at each of the separate components.

(B) Have a wall temperature of 191 °C ±11 °C over its entire length. The temperature of the system shall be demonstrated by profiling the thermal characteristics of the system where possible at initial installation and after any major maintenance performed on the system. The profiling shall be accomplished using the insertion thermocouple probing technique. The system temperature will be monitored continuously during testing at the locations and temperature described in § 86.1310–90(b)(3)(v).

(C) Maintain a gas temperature of 191 °C ±11 °C immediately before the heated filter and HFID. These gas temperatures will be determined by a temperature sensor located immediately upstream of each component.

(vi) The continuous hydrocarbon sampling probe shall:

(A) Be defined as the first 25 cm to 76 cm of the continuous hydrocarbon sampling system.

(B) Have a 0.48 cm minimum inside diameter.

(C) Be installed in the primary dilution tunnel at a point where the dilution air and exhaust are well mixed (that is, approximately 10 tunnel diameters downstream of the point where the exhaust enters the dilution tunnel).

(D) Be sufficiently distant (radially) from other probes and the tunnel wall so as to be free from the influence of any wakes or eddies.

(E) Increase the gas stream temperature to 191 °C ±11 °C at the exit of the probe. The ability of the probe to accomplish this shall be demonstrated using the insertion thermocouple technique at initial installation and after any major maintenance. Compliance with the temperature specification shall be demonstrated by continuously recording during each test the temperature of either the gas stream or the wall of the sample probe at its terminus.

(vii) The response time of the continuous measurement system shall be no greater than:

(A) 1.5 seconds from an instantaneous step change at the port entrance to the analyzer to within 90 percent of the step change.

(B) 20 seconds from an instantaneous step change at the entrance to the sample probe or overflow span gas port to within 90 percent of the step change. Analysis system response time shall be coordinated with CVS flow fluctuations and sampling time/test cycle offsets if necessary.

(C) For the purpose of verification of response times, the step change shall be at least 60 percent of full-scale chart deflection.

(3) *Primary dilution tunnel.* (i) The primary dilution tunnel shall be:

(A) Small enough in diameter to cause turbulent flow (Reynolds Number greater than 4000) and of sufficient length to cause complete mixing of the exhaust and dilution air;

(B) At least 46 cm in diameter; (engines below 110 kW may use a dilution tunnel that is 20 cm in diameter or larger)

(C) Constructed of electrically conductive material which does not react with the exhaust components; and

(D) Electrically grounded.

(ii) The temperature of the diluted exhaust stream inside of the primary dilution tunnel shall be sufficient to prevent water condensation.

(iii) The engine exhaust shall be directed downstream at the point where it is introduced into the primary dilution tunnel.

(4) *Continuously integrated* NO_X, CO, and CO_2 measurement systems. (i) The sample probe shall:

(A) Be in the same plane as the continuous HC probe, but shall be sufficiently distant (radially) from other probes and the tunnel wall so as to be free from the influences of any wakes or eddies.

(B) Heated and insulated over the entire length, to prevent water condensation, to a minimum temperature of 55 °C. Sample gas temperature immediately before the first filter in the system shall be at least 55 °C.

(ii) The continuous NO_X, CO, or CO_2 sampling and analysis system shall

conform to the specifications of part 86, subpart D of this chapter with the following exceptions and revisions:

(A) The system components required to be heated by part 86, subpart D of this chapter need only be heated to prevent water condensation, the minimum component temperature shall be 55 °C.

(B) The system response shall be no greater than 20 seconds. Analysis system response time shall be coordinated with CVS flow fluctuations and sampling time/test cycle offsets, if necessary.

(C) Alternative NO_X measurement techniques outlined in §86.346–79 of this chapter are not permitted for NO_X measurement in this subpart.

(D) All analytical gases must conform to the specifications of §89.312–96.

(E) Any range on a linear analyzer below 155 ppm must have and use a calibration curve conforming to §89.310–96.

(iii) The chart deflections or voltage output of analyzers with non-linear calibration curves shall be converted to concentration values by the calibration curve(s) specified in §89.323–96 before flow correction (if used) and subsequent integration takes place.

§89.420–96 Background sample.

(a) Background samples are produced by drawing a sample of the dilution air during the 60 second exhaust collection phase of each test cycle mode.

(1) Individual background samples may be produced and analyzed for each mode. Hence, a unique background value will be used for the emission calculations for each mode.

(2) Alternatively, a single background sample may be produced by drawing a sample during the collection phase of each of the test cycle modes. Hence, a single cumulative background value will be used for the emission calculations for each mode.

(b) For analysis of the individual sample described in paragraph (a)(1) of this section, a single value representing the average chart deflection over a 10-second stabilized period is stored. All readings taken during the 10-second interval must be stable at the final value to within ±1 percent of full scale.

(c) Measure HC, CO, CO_2, and NO_X exhaust and background concentrations in the sample bag(s) with approximately the same flow rates and pressures used during calibration.

§89.421–96 Exhaust gas analytical system; CVS bag sample.

(a) *Schematic drawings.* Figure 4 in appendix A to this subpart is a schematic drawing of the exhaust gas analytical system used for analyzing CVS bag samples from compression- ignition engines. Since various configurations can produce accurate results, exact conformance with the drawing is not required. Additional components such as instruments, valves, solenoids, pumps and switches may be used to provide additional information and coordinate the functions of the component systems. Other components such as snubbers, which are not needed to maintain accuracy in some systems, may be excluded if their exclusion is based upon good engineering judgment.

(b) *Major component description.* The analytical system, Figure 4 in appendix A to this subpart, consists of a flame ionization detector (FID) (heated for petroleum-fueled compression-ignition engines to 191 °C ±6 °C) for the measurement of hydrocarbons, nondispersive infrared analyzers (NDIR) for the measurement of carbon monoxide and carbon dioxide, and a chemiluminescence detector (CLD) (or HCLD) for the measurement of oxides of nitrogen. The exhaust gas analytical system shall conform to the following requirements:

(1) The CLD (or HCLD) requires that the nitrogen dioxide present in the sample be converted to nitric oxide before analysis. Other types of analyzers may be used if shown to yield equivalent results and if approved in advance by the Administrator.

(2) If CO instruments are used which are essentially free of CO_2 and water vapor interference, the use of the conditioning column may be deleted. (See §§86.1322–84 and 86.1342–90 of this chapter.)

(3) A CO instrument will be considered to be essentially free of CO_2 and water vapor interference if its response to a mixture of 3 percent CO_2 in N2, which has been bubbled through water at room temperature, produces an

equivalent CO response, as measured on the most sensitive CO range, which is less than 1 percent of full scale CO concentration on ranges above 300 ppm full scale or less than 3 ppm on ranges below 300 ppm full scale. (See § 86.1322–84 of this chapter.)

(c) *Alternate analytical systems.* Analysis systems meeting the specifications of part 86, subpart D of this chapter (with the exception of §§ 86.346–79 and 86.347–79) may be used for the testing required under this subpart. Heated analyzers may be used in their heated configuration.

(d) Other analyzers and equipment. Other types of analyzers and equipment may be used if shown to yield equivalent results and if approved in advance by the Administrator.

§ 89.422–96 Dilute sampling procedures—CVS calibration.

(a) The CVS is calibrated using an accurate flowmeter and restrictor valve.

(1) The flowmeter calibration must be traceable to NIST measurements, and will serve as the reference value (NIST ''true'' value) for the CVS calibration. (Note: In no case should an upstream screen or other restriction which can affect the flow be used ahead of the flowmeter unless calibrated throughout the flow range with such a device.)

(2) The CVS calibration procedures are designed for use of a ''metering venturi'' type flowmeter. Large radius or ASME flow nozzles are considered equivalent if traceable to NIST measurements. Other measurement systems may be used if shown to be equivalent under the test conditions in this section and traceable to NIST measurements.

(3) Measurements of the various flowmeter parameters are recorded and related to flow through the CVS.

(4) Procedures used by EPA for both PDP–CVS and CFV–CVS are outlined below. Other procedures yielding equivalent results may be used if approved in advance by the Administrator.

(b) After the calibration curve has been obtained, verification of the entire system may be performed by injecting a known mass of gas into the system and comparing the mass indicated by the system to the true mass injected. An indicated error does not necessarily mean that the calibration is wrong, since other factors can influence the accuracy of the system (for example, analyzer calibration, leaks, or HC hangup). A verification procedure is found in paragraph (e) of this section.

(c) *PDP–CVS calibration.* (1) The following calibration procedure outlines the equipment, the test configuration, and the various parameters which must be measured to establish the flow rate of the PDP–CVS pump.

(i) All the parameters related to the pump are simultaneously measured with the parameters related to a flowmeter which is connected in series with the pump.

(ii) The calculated flow rate, in (cm^3/s), (at pump inlet absolute pressure and temperature) can then be plotted versus a correlation function which is the value of a specific combination of pump parameters.

(iii) The linear equation which relates the pump flow and the correlation function is then determined.

(iv) In the event that a CVS has a multiple speed drive, a calibration for each range used must be performed.

(2) This calibration procedure is based on the measurement of the absolute values of the pump and flowmeter parameters that relate the flow rate at each point. Two conditions must be maintained to assure the accuracy and integrity of the calibration curve:

(i) The temperature stability must be maintained during calibration. (Flowmeters are sensitive to inlet temperature oscillations; this can cause the data points to be scattered. Gradual changes in temperature are acceptable as long as they occur over a period of several minutes.)

(ii) All connections and ducting between the flowmeter and the CVS pump must be absolutely void of leakage.

(3) During an exhaust emission test the measurement of these same pump parameters enables the user to calculate the flow rate from the calibration equation.

(4) Connect a system as shown in Figure 5 in appendix A to this subpart. Although particular types of equipment are shown, other configurations that

yield equivalent results may be used if approved in advance by the Administrator. For the system indicated, the following measurements and accuracies are required:

CALIBRATION DATA MEASUREMENTS

Parameter	Symbol	Units	Sensor-readout tolerances
Barometric pressure (corrected)	P_B	kPa	±.34 kPa
Ambient temperature	T_A	°C	±.3 °C
Air temperature into metering venturi	*ETI*	°C	±1.1 °C
Pressure drop between the inlet and throat of metering venturi.	*EDP*	kPa	±.01 kPa
Air flow	Q_S	m³/min	±.5% of NIST value.
Air temperature at CVS pump inlet	*PTI*	°C	±1.1 °C
Pressure depression at CVS pump inlet	*PPI*	kPa	±.055 kPa
Pressure head at CVS pump outlet	*PPO*	kPa	±.055 kPa
Air temperature at CVS pump outlet (optional)	*PTO*	°C	±1.1 °C
Pump revolutions during test period	*N*	Revs	±1 Rev.
Elapsed time for test period	*t*	s	±.5 s.

(5) After the system has been connected as shown in Figure 5 in appendix A to this subpart, set the variable restrictor in the wide open position and run the CVS pump for 20 minutes. Record the calibration data.

(6) Reset the restrictor valve to a more restricted condition in an increment of pump inlet depression that will yield a minimum of six data points for the total calibration. Allow the system to stabilize for 3 minutes and repeat the data acquisition.

(7) Data analysis:

(i) The air flow rate, Q_s, at each test point is calculated in standard cubic meters per minute (0 °C, 101.3 kPa) from the flowmeter data using the manufacturer's prescribed method.

(ii) The air flow rate is then converted to pump flow, V_o, in cubic meter per revolution at absolute pump inlet temperature and pressure:

$$V_o = \frac{Q_s}{n} \times \frac{T_p}{273} \times \frac{101.3}{P_p}$$

Where:

V_o=Pump flow, (m³/rev) at T_p, P_p.

Q_s=Meter air flow rate in standard cubic meters per minute, standard conditions are 0 °C, 101.3 kPa.

n=Pump speed in revolutions per minute.

T_p=Pump inlet temperature °K=P_{ti}+273 °K, P_{ti}=Pump inlet temp °C

P_p=Absolute pump inlet pressure, (kPa) $=P_B - P_{PI}$

Where:

P_B=barometric pressure, (kPa).

P_{PI}=Pump inlet depression, (kPa).

(iii) The correlation function at each test point is then calculated from the calibration data:

$$X_o = \frac{1}{n}\sqrt{\left(\frac{\Delta p}{P_e}\right)}$$

X_o=correlation function.

Δp=The pressure differential from pump inlet to pump outlet, (kPa). $=P_e - P_p$.

P_e=Absolute pump outlet pressure, (kPa) $=P_B + P_{PO}$

Where:

P_{PO}=Pressure head at pump outlet, (kPa).

(iv) A linear least squares fit is performed to generate the calibration equation which has the form:

$V_o = D_o - M(X_o)$

D_o and M are the intercept and slope constants, respectively, describing the regression line.

(8) A CVS system that has multiple speeds must be calibrated on each speed used. The calibration curves generated for the ranges will be approximately parallel and the intercept values, D_o, will increase as the pump flow range decreases.

(9) If the calibration has been performed carefully, the calculated values from the equation will be within ±0.50 percent of the measured value of V_o. Values of M will vary from one pump

to another, but values of D_o for pumps of the same make, model, and range should agree within ±3 percent of each other. Calibrations should be performed at pump start-up and after major maintenance to assure the stability of the pump slip rate. Analysis of mass injection data will also reflect pump slip stability.

(d) *CFV–CVS calibration.* (1) Calibration of the CFV is based upon the flow equation for a critical venturi. Gas flow is a function of inlet pressure and temperature:

$$Q_s = \frac{K_v P}{\sqrt{T}}$$

Where:

Qs=flow.

Kv=calibration coefficient.

P=absolute pressure.

T=absolute temperature.

The calibration procedure described in paragraph (d)(3) of this section establishes the value of the calibration coefficient at measured values of pressure, temperature, and air flow.

(2) The manufacturer's recommended procedure shall be followed for calibrating electronic portions of the CFV.

(3) Measurements necessary for flow calibration are as follows:

CALIBRATION DATA MEASUREMENTS

Parameter	Symbol	Units	Tolerances
Barometric Pressure (corrected)	P_B	kPa	±.34 kPa
Air temperature, into flowmeter	*ETI*	°C	(±.3 °C
Pressure drop between the inlet and throat of metering venturi.	*EDP*	kPa	±.01 kPa
Air flow	Q_S	m³/min.	±.5% of NIST value.
CFV inlet depression	*PPI*	kPa	±.055 kPa
Temperature at venturi inlet	T_V	°C	±2.2 °C

(4) Set up equipment as shown in Figure 6 in appendix A to subpart and eliminate leaks. (Leaks between the flow measuring devices and the critical flow venturi will seriously affect the accuracy of the calibration.)

(5) Set the variable flow restrictor to the open position, start the blower, and allow the system to stabilize. Record data from all instruments.

(6) Vary the flow restrictor and make at least eight readings across the critical flow range of the venturi.

(7) *Data analysis.* The data recorded during the calibration are to be used in the following calculations:

(i) The air flow rate (designated as Q_s) at each test point is calculated in standard cubic feet per minute from the flow meter data using the manufacturer's prescribed method.

(ii) Calculate values of the calibration coefficient for each test point:

$$K_v = \frac{Q_s \sqrt{T_v}}{P_v}$$

Where:

Q_s = Flow rate in standard cubic meter per minute, at the standard conditions of 0 °C, 101.3 kPa.

T_v = Temperature at venturi inlet, °K.

P_v = PB - PPI (= Pressure at venturi inlet, kPA)

Where:

P_{PI} = Venturi inlet pressure depression, (kPa).

(iii) Plot K_v as a function of venturi inlet pressure. For choked flow, K_v will have a relatively constant value. As pressure decreases (vacuum increases), the venturi becomes unchoked and K_v decreases. (See Figure 7 in appendix A to this subpart.)

(iv) For a minimum of eight points in the critical region calculate an average K_v and the standard deviation.

(v) If the standard deviation exceeds 0.3 percent of the average K_v, take corrective action.

(e) *CVS system verification.* The following ''gravimetric'' technique can be used to verify that the CVS and analytical instruments can accurately measure a mass of gas that has been injected into the system. (Verification can also be accomplished by constant

flow metering using critical flow orifice devices.)

(1) Obtain a small cylinder that has been charged with 99.5 percent or greater propane or carbon monoxide gas (Caution—carbon monoxide is poisonous).

(2) Determine a reference cylinder weight to the nearest 0.01 grams.

(3) Operate the CVS in the normal manner and release a quantity of pure propane into the system during the sampling period (approximately 5 minutes).

(4) The calculations are performed in the normal way except in the case of propane. The density of propane (0.6109 kg/m^3/carbon atom)) is used in place of the density of exhaust hydrocarbons.

(5) The gravimetric mass is subtracted from the CVS measured mass and then divided by the gravimetric mass to determine the percent accuracy of the system.

(6) Good engineering practice requires that the cause for any discrepancy greater than ±2 percent must be found and corrected.

§ 89.423–96 CVS calibration frequency.

The CVS positive displacement pump or critical flow venturi shall be calibrated following initial installation, major maintenance or as necessary when indicated by the CVS system verification (described in § 89.352–96(e)).

§ 89.424–96 Dilute emission sampling calculations.

(a) The final reported emission test results are computed by use of the following formula:

$$A_{WM} = \frac{\sum_{i=1}^{i=n} \left(g_i \times WF_i\right)}{\sum_{i=1}^{i=n-1} \left(kW - hr_i \times WF_i\right)}$$

Where:

A_{wm} = Weighted mass emission level (HC, CO, CO_2, or NO_X) in grams per kilowatt-hour.

g_i = Mass emission level in grams, measured during the mode.

WF_i = Effective weighing factor.

$kW\text{-}hr_i$ = Total kilowatt-hours (kilowatts integrated over time) for the mode.

(b) The mass of each pollutant for each mode for bag measurements and diesel heat exchanger system measurements is determined from the following equations:

(1) Hydrocarbon mass:

$HC_{mass} = V_{mix} \times Density_{HC} \times (HC_{conc}/10^6)$

(2) Oxides of nitrogen mass:

$NO_{Xmass} = V_{mix} \times Density_{NO2} \times KH \times (NO_{Xconc}/10^6)$

(3) Carbon monoxide mass:

$CO_{mass} = V_{mix} \times Density_{CO} \times (CO_{conc}/10^6)$

(4) Carbon dioxide mass:

$CO_{2mass} = V_{mix} \times Density_{CO2} \times (CO_{2conc}/10_2)$

(c) The mass of each pollutant for the mode for flow compensated sample systems is determined from the following equations:

$$HC_{mass} = V_{mix} \times Density_{HC} \frac{HC_e - HC_d\left(1 - \frac{1}{DF}\right)}{10^6}$$

$$NOX_{mass} = K_H \frac{NOX_e - NOX_d\left(1 - \frac{1}{DF}\right)}{10^6} V_{mix} \times Density_{NO_2}$$

$$CO_{mass} = V_{mix} \times Density_{CO} \frac{CO_c - CO_d\left(1 - \frac{1}{DF}\right)}{10^6}$$

$$CO_{2_{mass}} = V_{mix} \times Density_{CO_2} \frac{CO_{2_e} - CO_{2_d}\left(1 - \frac{1}{DF}\right)}{10^6}$$

(d) Meaning of symbols:

(1) For hydrocarbon equations:

HC_{mass} = Hydrocarbon emissions, in grams per test mode.

$Density_{HC}$ = Density of hydrocarbons is (.5800 kg/m³) for #1 diesel, and (0.5746 kg/m³) for #2 diesel, assuming an average carbon to hydrogen ratio of 1:1.93 for #1 diesel, and 1:1.80 for #2 diesel at 20 °C and 101.3 kPa pressure.

HC_{conc} = Hydrocarbon concentration of the dilute exhaust sample corrected for background, in ppm carbon equivalent (that is, equivalent propane times 3).

$$HC_{conc} = HC_e - HC_d\left(1 - \frac{1}{DF}\right)$$

Where:

HC_e = Hydrocarbon concentration of the dilute exhaust bag sample or, for diesel heat exchanger systems, average hydrocarbon concentration of the dilute exhaust sample as calculated from the integrated HC traces, in ppm carbon equivalent. For flow compensated sample systems $(HC_e)_i$ is the instantaneous concentration.

HC_d = Hydrocarbon concentration of the dilution air as measured, in ppm carbon equivalent.

(2) For oxides of nitrogen equations:

NO_{Xmass} = Oxides of nitrogen emissions, in grams per test mode.

$Density\ NO_2$ = Density of oxides of nitrogen is 1.913 kg/m³, assuming they are in the form of nitrogen dioxide, at 20 °C and 101.3 kPa pressure.

NO_{Xconc} = Oxides of nitrogen concentration of the dilute exhaust sample corrected for background, in ppm:

$$NOx_{conc} = NOx_e - NOx_d\left(1 - \frac{1}{DF}\right)$$

Where:

NO_{Xe} = Oxides of nitrogen concentration of the dilute exhaust bag sample as measured, in ppm. For flow compensated sample systems $(NO_{Xe})_i$ is the instantaneous concentration.

NO_{Xd} = Oxides of nitrogen concentration of the dilute air as measured, in ppm.

(3) For carbon monoxide equations:

CO_{mass}=Carbon monoxide emissions, grams per test mode. $Density_{CO}$=Density of carbon monoxide (1.164 kg/m³ at 20 °C and 101.3 kPa pressure).

CO_{conc}=Carbon monoxide concentration of the dilute exhaust sample corrected for background, water vapor, and CO_2 extraction, ppm.

$$CO_{conc} = CO_e - CO_d\left(1 - \frac{1}{DF}\right)$$

Where:

CO_e=Carbon monoxide concentration of the dilute exhaust bag sample volume corrected for water vapor and carbon dioxide extraction, ppm. For flow compensated sample systems, $(CO_e)_i$ is the instantaneous concentration.

The following calculation assumes the carbon to hydrogen ratio of the fuel is 1:1.85. As an option the measured actual carbon to hydrogen ratio may be used:

$CO_e=[1-0.01925CO_{2e}-0.000323R]CO_{em}$

Where:

CO_{em}=Carbon monoxide concentration of the dilute exhaust sample as measured, ppm.

CO_{2e}=Carbon dioxide concentration of the dilute exhaust bag sample, in percent, if measured. For flow compensated sample systems, $(CO_{2e})_i$ is the instantaneous concentration. For cases where exhaust sampling of CO_2 is not performed, the following approximation is permitted:

$$CO_{2_e} = \frac{44.010}{12.011 + 1.008\alpha} \; \frac{M^1 \; 453.6}{Density_{CO_2}} \; \frac{100}{V_{mix}}$$

^{a}=Average carbon to hydrogen ratio.

M^1=Fuel mass consumed during the test cycle.

R=Relative humidity of the dilution air, percent.

CO_d=Carbon monoxide concentration of the dilution air corrected for water vapor extraction, ppm.

$CO_d=(1-0.000323R)CO_{dm}$

Where:

CO_{dm}=Carbon monoxide concentration of the dilution air sample as measured, ppm.

NOTE: If a CO instrument which meets the criteria specified in §86.1311–90 of this chapter is used and the conditioning column has been deleted, CO_{em} must be substituted directly for CO_e and CO_{dm} must be substituted directly for CO_d.

(4) For carbon dioxide equation:

CO_{2mass}=Carbon dioxide emissions, in grams per test mode.

Density CO_2=Density of carbon dioxide is 1.830 kg/m^3, at 20 °C and 760 mm Hg pressure.

CO_{2conc}=Carbon dioxide concentration of the dilute exhaust sample corrected for background, in percent.

$$CO_{2_{mass}} = CO_{2_e} - CO_{2_d}\left(1 - \frac{1}{DF}\right)$$

Where:

CO_{2d}=Carbon dioxide concentration of the dilution air as measured, in percent.

$$(5)\; DF = \frac{13.4}{CO_{2_e} + \left(HC_e + CO_e \times 10^{-4}\right)}, \text{ or } DF = \frac{13.4}{CO_{2_e}}.$$

(6) KH=Humidity correction factor. For compression-ignition engines:

$KH=1/[1-0.0182\,(H-10.71)]$.

Where:

H=Absolute humidity of the engine intake air in grams of water per kilogram of dry air and

$H=(6.211)R_i \times P_d)/(P_b-(P_d \times R_i/100))$

Where:

R_i=Relative humidity of the engine intake air, in percent.

P_d=Saturated vapor pressure (kPa) at the engine intake air dry bulb temperature.

P_B=Barometric pressure (kPa).

(e) The final reported brake-specific fuel consumption (*BSFC*) shall be computed by use of the following formula:

$$BSFC = \frac{M}{kW - hr}$$

Where:

BSFC=brake-specific fuel consumption in grams of fuel per kilowatt-hr (kW-hr)

M=mass of fuel in grams, used by the engine during a mode

kW-hr=total kilowatts integrated with respect to time for a mode

(f) The mass of fuel for the mode is determined from mass fuel flow measurements made during the mode, or from the following equation:

$$M = \left(\frac{G_S}{R_2}\right)\left(\frac{1}{273.15}\right)$$

Where:

M=Mass of fuel, in grams, used by the engine during the mode.

G_s=Grams of carbon measured during the mode:

$$G_S = \left[\frac{12.011}{12.011 + \alpha\,(1.008)}\right] HC_{mass} + 0.429CO_{mass} + 0.273CO_{2_{mass}}$$

R_2=Grams C in fuel per gram of fuel

Where:

HC_{mass}=hydrocarbon emissions, in grams for the mode

CO_{2mass}=carbon monoxide emissions, in grams for the mode

CO_{2mass}=carbon dioxide emissions, in grams for the mode

α=The atomic hydrogen to carbon ratio of the fuel.

§ 89.425–96 Particulate adjustment factor.

The following equation may be used to adjust the particulate measurement when the test fuel specified in Table 4 of Subpart D of this Part is used:

$$PM_{adj} = PM - [BSFC * (FSF - USLF_{CA})] * 0.0917$$

Where:

PM_{adj}=adjusted measured PM level [g/Kw-hr]

PM=measured weighted PM level [g/Kw-hr]

BSFC=measured brake specific fuel consumption [G/Kw-hr]

FSF=fuel sulfur weight fraction

$USLF_{CA}$=upper sulfur level weight fraction of California specification.

This adjustment only applies to engines with no exhaust gas after treatment. No adjustment is provided for engines with exhaust gas after treatment.

APPENDIX A TO SUBPART E—FIGURES

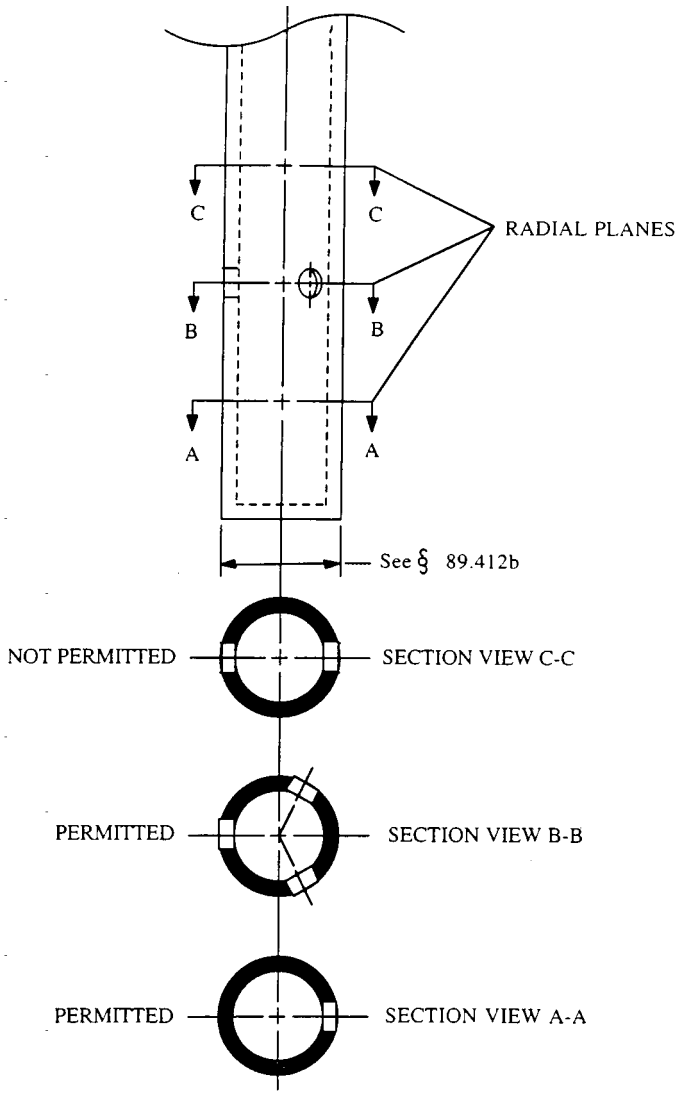

Figure 1.--SAMPLE PROBE AND TYPICAL HOLE SPACING

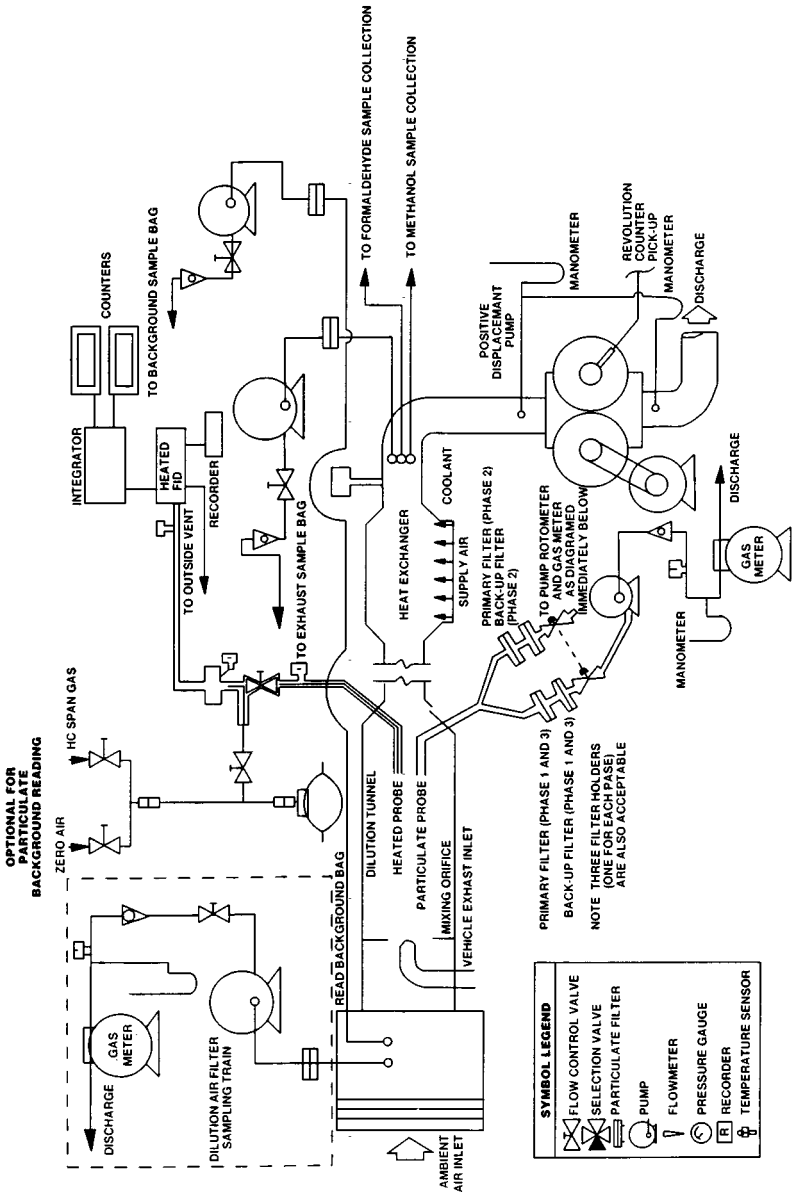

Figure 2 — Gaseous & Particulate Emissions Sampling System (PDP-CVS)

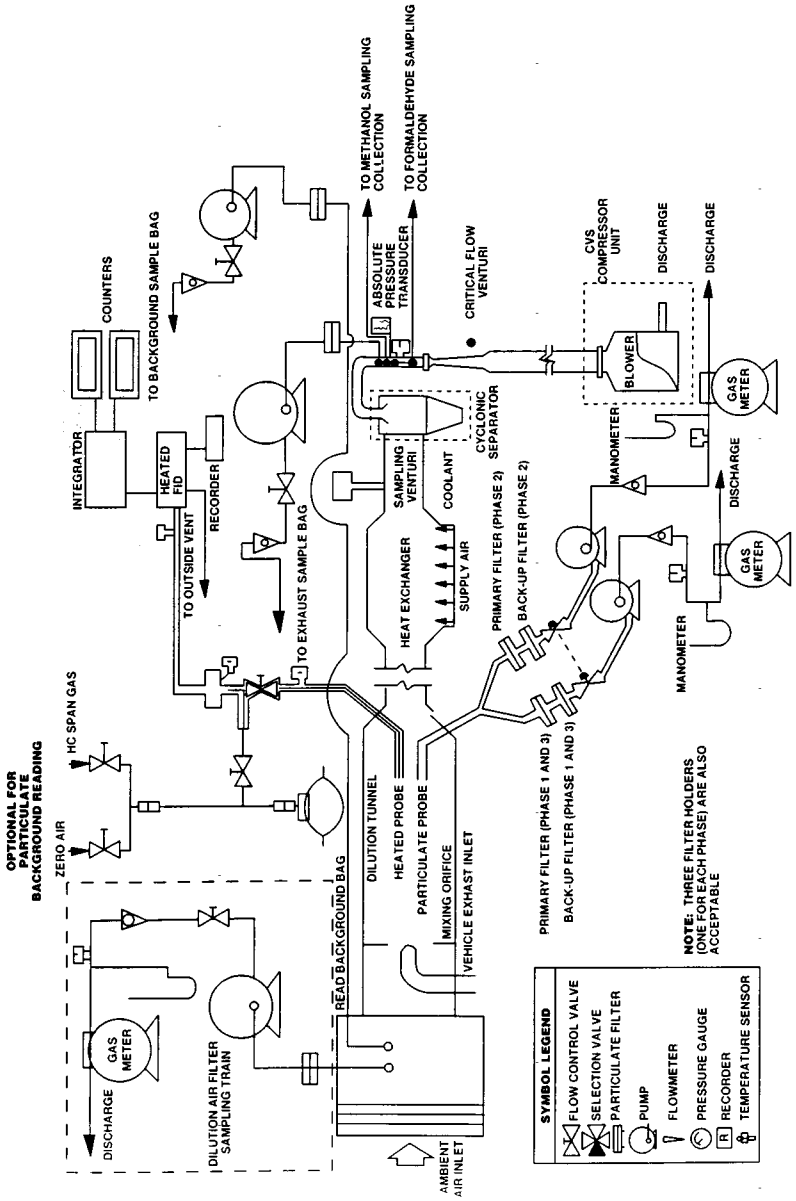

Figure 3. — Gaseous and Particulate Emissions Sampling System (CVF-CVS)

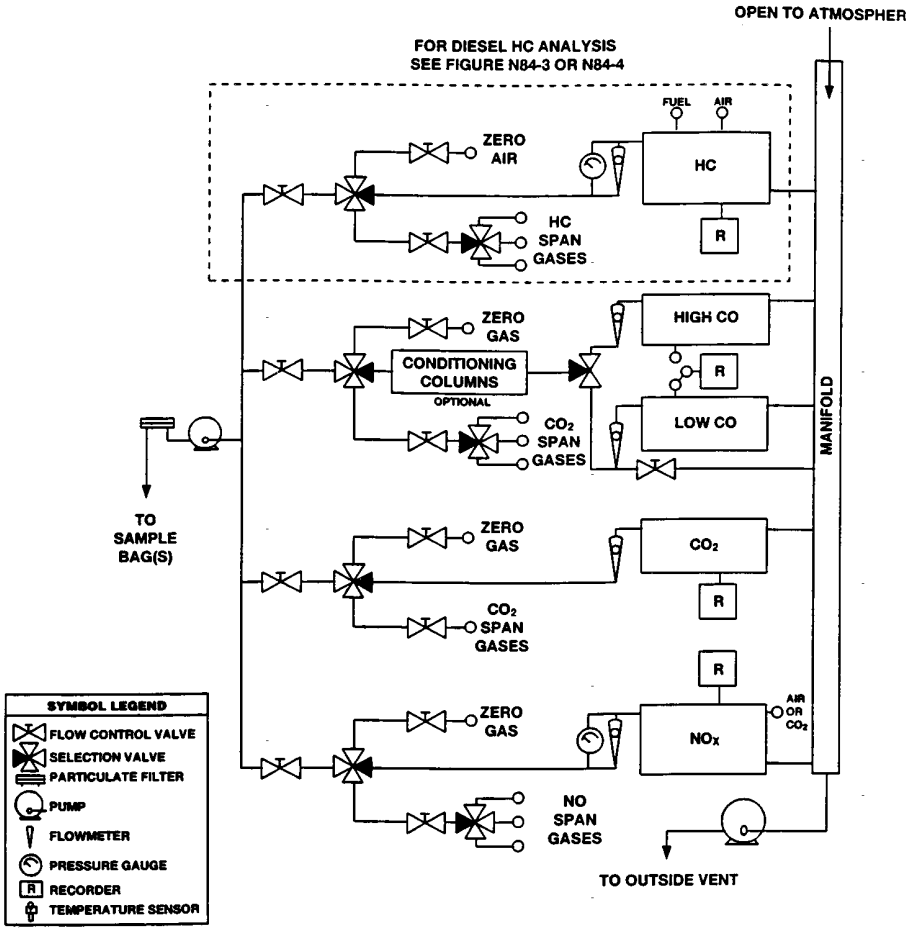

Figure 4. — Exhaust Gas Analytical System

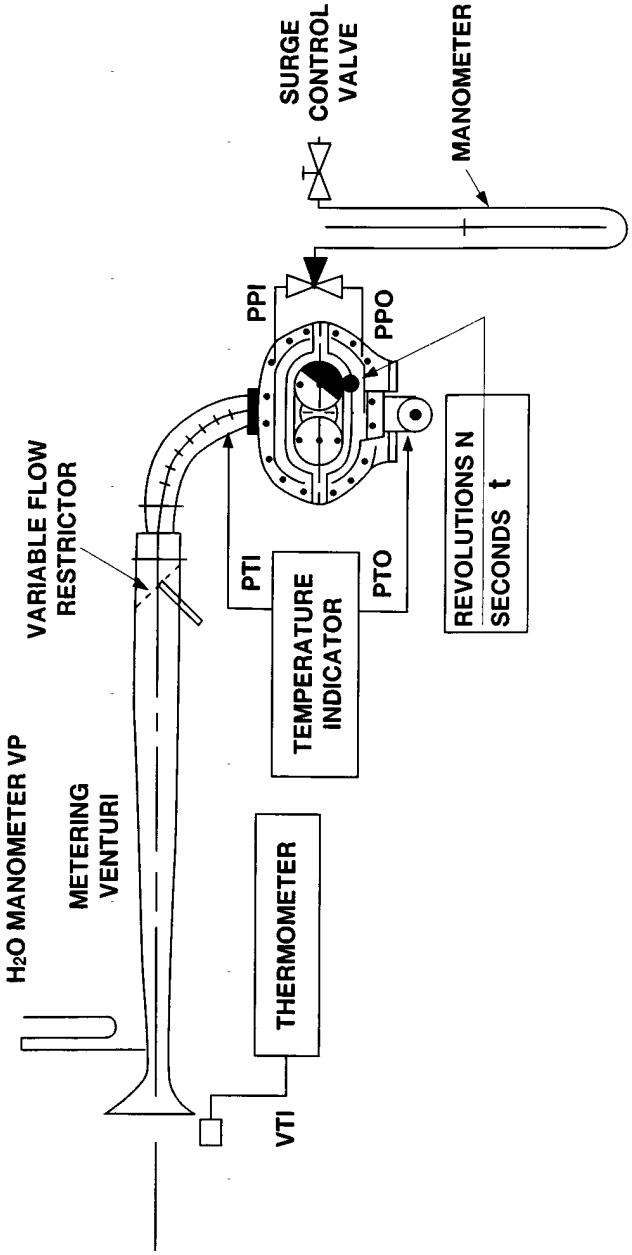

Figure 5. — PDP-CVS Calibration Configuration

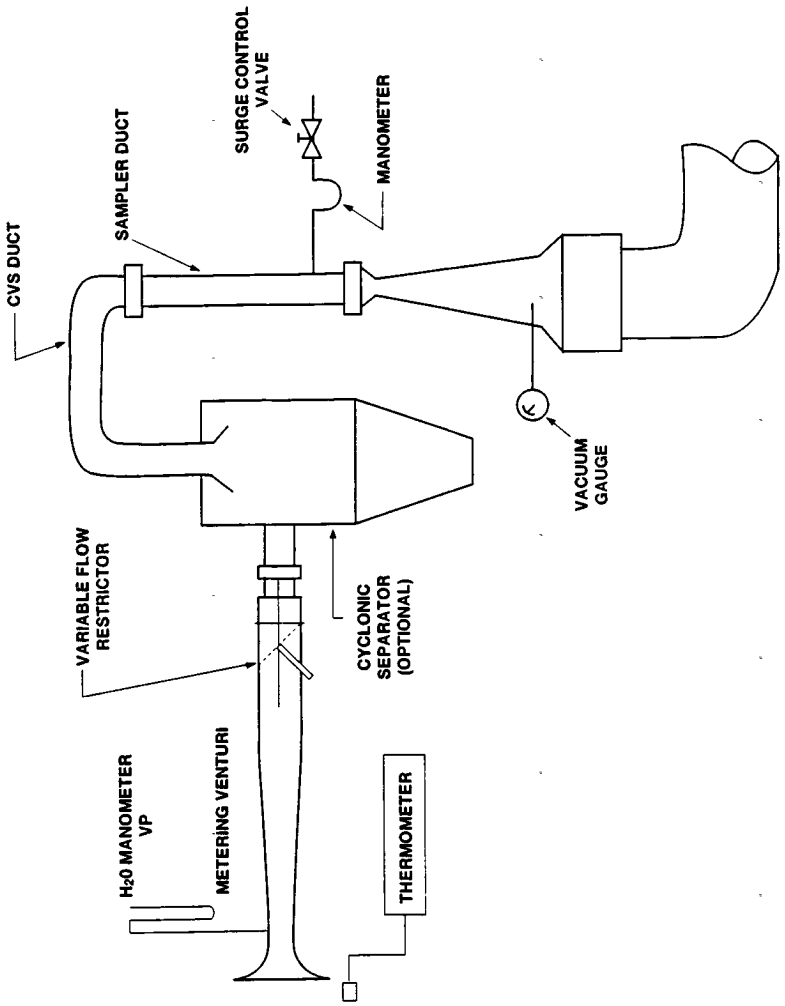

Figure 6. — CFV-CVS Calibration Configuration

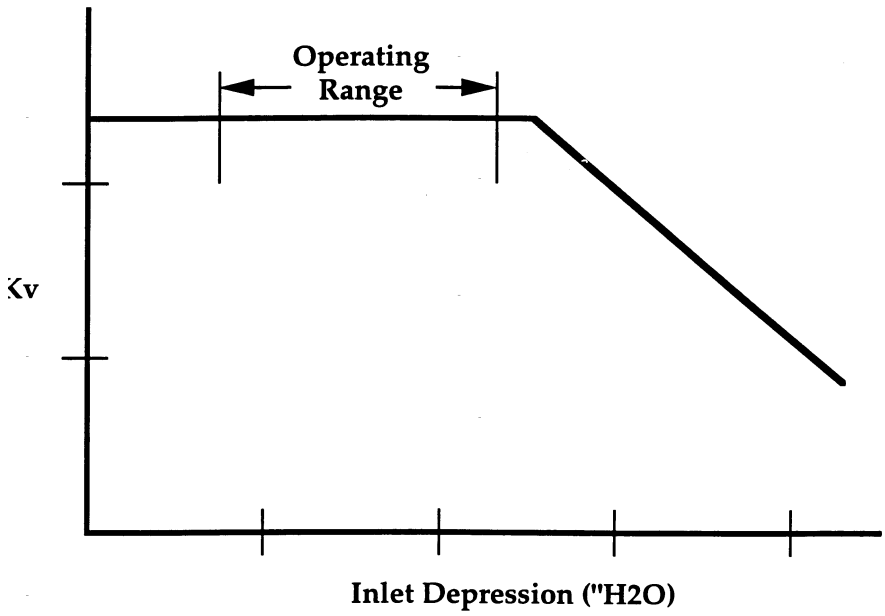

Figure 7.—Sonic Flow Choking

APPENDIX B TO SUBPART E—TABLE 1

TABLE 1.—8. MODE TEST CYCLE (MY96 AND LATER)

Test segment	Mode No.	Engine speed (1)	Observed torque (2) (percent of maximum observed)	Time in mode (minutes)		Weighting factors
				Min	Max	
1	1	Rated	100	5.0	20.0	0.15
1	2	Rated	75	5.0	20.0	0.15
1	3	Rated	50	5.0	20.0	0.15
1	4	Rated	10	5.0	20.0	0.10
2	5	Int	100	5.0	20.0	0.10
2	6	Int	75	5.0	20.0	0.10
2	7	Int	50	5.0	20.0	0.10
2	8	Idle	0	5.0	20.0	0.15

(1) Engine speed (non-idle): ±1 percent of rated or ±3 rpm, which ever is greater. Engine speed (idle): Within manufacturer's specifications. Rated speed, intermediate speed, and idle speed are specified by the manufacturer. If no intermediate speed is stated, 60 percent of rated speed shall be used.

(2) Torque (non-idle): Throttle fully open for 100 percent points. Other non-idle points: ±2 percent of set point. Torque (idle): Throttle fully closed. Load less than 5 percent of peak torque.

Subpart F—Selective Enforcement Auditing

§ 89.501–96 Applicability.

The requirements of subpart F are applicable to all nonroad engines subject to the provisions of subpart A of part 89.

§ 89.502–96 Definitions.

The definitions in subpart A of this part apply to this subpart. The following definitions also apply to this subpart.

Acceptable quality level (AQL) means the maximum percentage of failing engines that can be considered a satisfactory process average for sampling inspections.

Configuration means any subclassification of an engine family which can be described on the basis of gross power, emission control system, governed speed, injector size, engine calibration, and other parameters as designated by the Administrator.

Inspection criteria means the pass and fail numbers associated with a particular sampling plan.

Test engine means an engine in a test sample.

Test sample means the collection of engines selected from the population of an engine family for emission testing.

§ 89.503–96 Test orders.

(a) A test order addressed to the manufacturer is required for any testing under this subpart.

(b) The test order is signed by the Assistant Administrator for Air and Radiation or his or her designee. The test order must be delivered in person by an EPA enforcement officer or EPA authorized representative to a company representative or sent by registered mail, return receipt requested, to the manufacturer's representative who signed the application for certification submitted by the manufacturer, pursuant to the requirements of the applicable section of subpart B of this part. Upon receipt of a test order, the manufacturer must comply with all of the provisions of this subpart and instructions in the test order.

(c) *Information included in test order.* (1) The test order will specify the engine family to be selected for testing, the manufacturer's engine assembly plant or associated storage facility or port facility (for imported engines) from which the engines must be selected, the time and location at which engines must be selected, and the procedure by which engines of the specified family must be selected. The test order may specify the configuration to be audited and/or the number of engines to be selected per day. Engine manufacturers are required to select a minimum of four engines per day unless an alternate selection procedure is approved pursuant to § 89.507–96(a), or unless total production of the specified configuration is less than four engines per day. If total production of the specified configuration is less than four engines per day, the manufacturer selects the actual number of engines produced per day.

(2) The test order may include alternate families to be selected for testing at the Administrator's discretion in the event that engines of the specified family are not available for testing because those engines are not being manufactured during the specified time or are not being stored at the specified assembly plant, associated storage facilities, or port of entry.

(3) If the specified family is not being manufactured at a rate of at least two engines per day in the case of manufacturers specified in § 89.508–96(g)(1), or one engine per day in the case of manufacturers specified in § 89.508–96(g)(2), over the expected duration of the audit, the Assistant Administrator or her or his designated representative may select engines of the alternate family for testing.

(4) In addition, the test order may include other directions or information essential to the administration of the required testing.

(d) A manufacturer may submit a list of engine families and the corresponding assembly plants, associated storage facilities, or (in the case of imported engines) port facilities from which the manufacturer prefers to have engines selected for testing in response to a test order. In order that a manufacturer's preferred location be considered for inclusion in a test order for a particular engine family, the list must be submitted prior to issuance of the test

order. Notwithstanding the fact that a manufacturer has submitted the list, the Administrator may order selection at other than a preferred location.

(e) Upon receipt of a test order, a manufacturer must proceed in accordance with the provisions of this subpart.

(f)(1) During a given model year, the Administrator may not issue to a manufacturer more Selective Enforcement Auditing (SEA) test orders than an annual limit determined to be the larger of the following factors:

(i) Production factor, determined by dividing the projected nonroad engine sales in the United States for that model year, as declared by the manufacturer under §89.505- 96(c)(1), by 16,000 and rounding to the nearest whole number. If the projected sales are less than 8,000, this factor is one.

(ii) Family factor, determined by dividing the manufacturer's total number of certified engine families by five and rounding to the nearest whole number.

(2) If a manufacturer submits to EPA in writing prior to or during the model year a reliable sales projection update or adds engine families or deletes engine families from its production, that information is used for recalculating the manufacturer's annual limit of SEA test orders.

(3) Any SEA test order for which the family fails under §89.510–96 or for which testing is not completed is not counted against the annual limit.

(4) When the annual limit has been met, the Administrator may issue additional test orders to test those families for which evidence exists indicating noncompliance. An SEA test order issued on this basis will include a statement as to the reason for its issuance.

§89.504–96 Testing by the Administrator.

(a) The Administrator may require by test order under §89.503–96 that engines of a specified family be selected in a manner consistent with the requirements of §89.507–96 and submitted to the Administrator at the place designated for the purpose of conducting emission tests. These tests will be conducted in accordance with §89.508–96 to determine whether engines manufactured by the manufacturer conform with the regulations with respect to which the certificate of conformity was issued.

(b) *Designating official data.* (1) Whenever the Administrator conducts a test on a test engine or the Administrator and manufacturer each conduct a test on the same test engine, the results of the Administrator's test comprise the official data for that engine.

(2) Whenever the manufacturer conducts all tests on a test engine, the manufacturer's test data is accepted as the official data, provided that if the Administrator makes a determination based on testing conducted under paragraph (a) of this section that there is a substantial lack of agreement between the manufacturer's test results and the Administrator's test results, no manufacturer's test data from the manufacturer's test facility will be accepted for purposes of this subpart.

(c) If testing conducted under §89.503–96 is unacceptable under paragraph (b)(2) of this section, the Administrator must:

(1) Notify the manufacturer in writing of the Administrator's determination that the test facility is inappropriate for conducting the tests required by this subpart and the reasons therefor; and

(2) Reinstate any manufacturer's data upon a showing by the manufacturer that the data acquired under §89.503–96 was erroneous and the manufacturer's data was correct.

(d) The manufacturer may request in writing that the Administrator reconsider the determination in paragraph (b)(2) of this section based on data or information which indicates that changes have been made to the test facility and these changes have resolved the reasons for disqualification.

§89.505–96 Maintenance of records; submittal of information.

(a) The manufacturer of any new nonroad engine subject to any of the provisions of this subpart must establish, maintain, and retain the following adequately organized and indexed records:

(1) *General records.* A description of all equipment used to test engines in accordance with §89.508–96 pursuant to a

test order issued under this subpart, specifically, the equipment requirements specified in §§ 86.884–8 and 86.884–9 of this chapter and the equipment requirements specified in §§ 89.306–96, 89.308–96, 89.309–96, and 89.312–96.

(2) *Individual records.* These records pertain to each audit conducted pursuant to this subpart and include:

(i) The date, time, and location of each test;

(ii) The number of hours of service accumulated on the engine when the test began and ended;

(iii) The names of all supervisory personnel involved in the conduct of the audit;

(iv) A record and description of any repairs performed prior to and/or subsequent to approval by the Administrator, giving the date, associated time, justification, name(s) of the authorizing personnel, and names of all supervisory personnel responsible for the conduct of the repair;

(v) The date the engine was shipped from the assembly plant, associated storage facility or port facility, and date the engine was received at the testing facility;

(vi) A complete record of all emission tests performed pursuant to this subpart (except tests performed directly by EPA), including all individual worksheets and/or other documentation relating to each test, or exact copies thereof, to be in accordance with the record requirements specified in § 89.404–96 or § 86.884–10 of this chapter.

(vii) A brief description of any significant audit events not described under paragraph (a)(2) of this section, commencing with the test engine selection process and including such extraordinary events as engine damage during shipment.

(3) The manufacturer must record test equipment description, pursuant to paragraph (a)(1) of this section, for each test cell that can be used to perform emission testing under this subpart.

(b) The manufacturer must retain all records required to be maintained under this subpart for a period of one year after completion of all testing in response to a test order. Records may be retained as hard copy or reduced to microfilm, floppy disc, and so forth, depending upon the manufacturer's record retention procedure; provided, that in every case, all the information contained in the hard copy is retained.

(c) The manufacturer must, upon request by the Administrator, submit the following information with regard to engine production:

(1) Projected production for each engine configuration within each engine family for which certification is requested;

(2) Number of engines, by configuration and assembly plant, scheduled for production for the time period designated in the request;

(3) Number of engines, by configuration and by assembly plant, storage facility or port facility, scheduled to be stored at facilities for the time period designated in the request; and

(4) Number of engines, by configuration and assembly plant, produced during the time period designated in the request that are complete for introduction into commerce.

(d) Nothing in this section limits the Administrator's discretion in requiring the manufacturer to retain additional records or submit information not specifically required by this section.

(e) All reports, submissions, notifications, and requests for approvals made under this subpart are addressed to: Director, Manufacturers Operations Division, U.S. Environmental Protection Agency, 6405–J, 401 M Street SW, Washington, DC 20460.

§ 89.506–96 Right of entry and access.

(a) To allow the Administrator to determine whether a manufacturer is complying with the provisions of this subpart and a test order issued thereunder, EPA enforcement officers or EPA authorized representatives may enter during operating hours and upon presentation of credentials any of the following places:

(1) Any facility where any engine to be introduced into commerce, including ports of entry, or any emission-related component is manufactured, assembled, or stored;

(2) Any facility where any tests conducted pursuant to a test order or any procedures or activities connected with these tests are or were performed;

(3) Any facility where any engine which is being tested, was tested, or will be tested is present; and

(4) Any facility where any record or other document relating to any of the above is located.

(b) Upon admission to any facility referred to in paragraph (a) of this section, EPA enforcement officers or EPA authorized representatives are authorized to perform the following inspection-related activities:

(1) To inspect and monitor any aspects of engine manufacture, assembly, storage, testing and other procedures, and the facilities in which these procedures are conducted;

(2) To inspect and monitor any aspect of engine test procedures or activities, including, but not limited to, engine selection, preparation, service accumulation, emission test cycles, and maintenance and verification of test equipment calibration;

(3) To inspect and make copies of any records or documents related to the assembly, storage, selection, and testing of an engine in compliance with a test order; and

(4) To inspect and photograph any part or aspect of any engine and any component used in the assembly thereof that is reasonably related to the purpose of the entry.

(c) EPA enforcement officers or EPA authorized representatives are authorized to obtain reasonable assistance without cost from those in charge of a facility to help the officers perform any function listed in this subpart and they are authorized to request the recipient of a test order to make arrangements with those in charge of a facility operated for the manufacturer's benefit to furnish reasonable assistance without cost to EPA whether or not the recipient controls the facility.

(1) Reasonable assistance includes, but is not limited to, clerical, copying, interpretation and translation services; the making available on an EPA enforcement officer's or EPA authorized representative's request of personnel of the facility being inspected during their working hours to inform the EPA enforcement officer or EPA authorized representative of how the facility operates and to answer the officer's or representative's questions; and the performance on request of emission tests on any engine which is being, has been, or will be used for SEA testing.

(2) A manufacturer may be compelled to cause the personal appearance of any employee at such a facility before an EPA enforcement officer or EPA authorized representative by written request for his appearance, signed by the Assistant Administrator for Air and Radiation, served on the manufacturer. Any such employee who has been instructed by the manufacturer to appear will be entitled to be accompanied, represented, and advised by counsel.

(d) EPA enforcement officers or EPA authorized representatives are authorized to seek a warrant or court order authorizing the EPA enforcement officers or EPA authorized representatives to conduct activities related to entry and access as authorized in this section, as appropriate, to execute the functions specified in this section. EPA enforcement officers or authorized representatives may proceed ex parte to obtain a warrant whether or not the EPA enforcement officers or EPA authorized representatives first attempted to seek permission of the recipient of the test order or the party in charge of the facilities in question to conduct activities related to entry and access as authorized in this section.

(e) A recipient of a test order must permit an EPA enforcement officer(s) or EPA authorized representative(s) who presents a warrant or court order to conduct activities related to entry and access as authorized in this section and as described in the warrant or court order. The recipient must also cause those in charge of its facility or a facility operated for its benefit to permit entry and access as authorized in this section pursuant to a warrant or court order whether or not the recipient controls the facility. In the absence of a warrant or court order, an EPA enforcement officer(s) or EPA authorized representative(s) may conduct activities related to entry and access as authorized in this section only upon the consent of the recipient of the test order or the party in charge of the facilities in question.

(f) It is not a violation of this part or the Clean Air Act for any person to refuse to permit an EPA enforcement

officer(s) or EPA authorized representative(s) to conduct activities related to entry and access as authorized in this section if the officer(s) or representative(s) appears without a warrant or court order.

(g) A manufacturer is responsible for locating its foreign testing and manufacturing facilities in jurisdictions where local law prohibits an EPA enforcement officer(s) or EPA authorized representative(s) from conducting the entry and access activities specified in this section. EPA will not attempt to make any inspections which it has been informed that local foreign law prohibits.

§ 89.507–96 Sample selection.

(a) Engines comprising a test sample will be selected at the location and in the manner specified in the test order. If a manufacturer determines that the test engines cannot be selected in the manner specified in the test order, an alternative selection procedure may be employed, provided the manufacturer requests approval of the alternative procedure prior to the start of test sample selection, and the Administrator approves the procedure.

(b) The manufacturer must assemble the test engines of the family selected for testing using its normal mass production process for engines to be distributed into commerce. If, between the time the manufacturer is notified of a test order and the time the manufacturer finishes selecting test engines, the manufacturer implements any change(s) in its production processes, including quality control, which may reasonably be expected to affect the emissions of the engines selected, then the manufacturer must, during the audit, inform the Administrator of such changes. If the test engines are selected at a location where they do not have their operational and emission control systems installed, the test order will specify the manner and location for selection of components to complete assembly of the engines. The manufacturer must assemble these components onto the test engines using normal assembly and quality control procedures as documented by the manufacturer.

(c) No quality control, testing, or assembly procedures will be used on the test engine or any portion thereof, including parts and subassemblies, that have not been or will not be used during the production and assembly of all other engines of that family, unless the Administrator approves the modification in assembly procedures pursuant to paragraph (b) of this section.

(d) The test order may specify that an EPA enforcement officer(s) or authorized representative(s), rather than the manufacturer, select the test engines according to the method specified in the test order.

(e) The order in which test engines are selected determines the order in which test results are to be used in applying the sampling plan in accordance with § 89.510–96.

(f) The manufacturer must keep on hand all untested engines, if any, comprising the test sample until a pass or fail decision is reached in accordance with § 89.510–96(e). The manufacturer may ship any tested engine which has not failed the requirements as set forth in § 89.510–96(b). However, once the manufacturer ships any test engine, it relinquishes the prerogative to conduct retests as provided in § 89.508–96(i).

§ 89.508–96 Test procedures.

(a)(1) For nonroad engines subject to the provisions of this subpart, the prescribed test procedures are the nonroad engine 8-mode test procedure as described in subpart E of this part, the federal smoke test as described in part 86, subpart I of this chapter, and the particulate test procedure as adopted in the California Regulations for New 1996 and Later Heavy-Duty Off-Road Diesel Cycle Engines. This procedure is incorporated by reference. See § 89.6.

(2) The Administrator may, on the basis of a written application by a manufacturer, prescribe test procedures other than those specified in paragraph (a)(1) of this section for any nonroad engine he or she determines is not susceptible to satisfactory testing using the procedures specified in paragraph (a)(1) of this section.

(b)(1) The manufacturer may not adjust, repair, prepare, or modify the engines selected for testing and may not perform any emission tests on engines

selected for testing pursuant to the test order unless this adjustment, repair, preparation, modification, and/or tests are documented in the manufacturer's engine assembly and inspection procedures and are actually performed or unless these adjustments and/or tests are required or permitted under this subpart or are approved in advance by the Administrator.

(2) The Administrator may adjust or cause to be adjusted any engine parameter which the Administrator has determined to be subject to adjustment for certification and Selective Enforcement Audit testing in accordance with §89.108–96, to any setting within the physically adjustable range of that parameter, as determined by the Administrator in accordance with §89.108–96, prior to the performance of any tests. However, if the idle speed parameter is one which the Administrator has determined to be subject to adjustment, the Administrator may not adjust it to any setting which causes a lower engine idle speed than would have been possible within the physically adjustable range of the idle speed parameter if the manufacturer had accumulated 125 hours of service on the engine under paragraph (c) of this section, all other parameters being identically adjusted for the purpose of the comparison. The manufacturer may be requested to supply information needed to establish an alternate minimum idle speed. The Administrator, in making or specifying these adjustments, may consider the effect of the deviation from the manufacturer's recommended setting on emission performance characteristics as well as the likelihood that similar settings will occur on in-use engines. In determining likelihood, the Administrator may consider factors such as, but not limited to, the effect of the adjustment on engine performance characteristics and surveillance information from similar in-use engines.

(c) *Service Accumulation.* Prior to performing exhaust emission testing on an SEA test engine, the manufacturer may accumulate on each engine a number of hours of service equal to the greater of 125 hours or the number of hours the manufacturer accumulated during certification on the emission data engine corresponding to the family specified in the test order.

(1) Service accumulation must be performed in a manner using good engineering judgment to obtain emission results representative of normal production engines. This service accumulation must be consistent with the new engine break-in instructions contained in the applicable owner's manual.

(2) The manufacturer must accumulate service at a minimum rate of 16 hours per engine during each 24-hour period, unless otherwise approved by the Administrator.

(i) The first 24-hour period for service begins as soon as authorized checks, inspections, and preparations are completed on each engine.

(ii) The minimum service or mileage accumulation rate does not apply on weekends or holidays.

(iii) If the manufacturer's service or target is less than the minimum rate specified (16 hours per day), then the minimum daily accumulation rate is equal to the manufacturer's service target.

(3) Service accumulation must be completed on a sufficient number of test engines during consecutive 24-hour periods to assure that the number of engines tested per day fulfills the requirements of paragraphs (g)(1) and (g)(2) of this section.

(d) The manufacturer may not perform any maintenance on test engines after selection for testing, nor may the Administrator allow deletion of any engine from the test sequence, unless requested by the manufacturer and approved by the Administrator before any engine maintenance or deletion.

(e) The manufacturer must expeditiously ship test engines from the point of selection to the test facility. If the test facility is not located at or in close proximity to the point of selection, the manufacturer must assure that test engines arrive at the test facility within 24 hours of selection. The Administrator may approve more time for shipment based upon a request by the manufacturer accompanied by a satisfactory justification.

(f) If an engine cannot complete the service accumulation or an emission

test because of a malfunction, the manufacturer may request that the Administrator authorize either the repair of that engine or its deletion from the test sequence.

(g) Whenever a manufacturer conducts testing pursuant to a test order issued under this subpart, the manufacturer must notify the Administrator within one working day of receipt of the test order as to which test facility will be used to comply with the test order. If no test cells are available at a desired facility, the manufacturer must provide alternate testing capability satisfactory to the Administrator.

(1) A manufacturer with projected nonroad engine sales for the United States market for the applicable year of 7,500 or greater must complete emission testing at a minimum rate of two engines per 24-hour period, including each voided test and each smoke test.

(2) A manufacturer with projected nonroad engine sales for the United States market for the applicable year of less than 7,500 must complete emission testing at a minimum rate of one engine per 24-hour period, including each voided test and each smoke test.

(3) The Administrator may approve a lower daily rate of emission testing based upon a request by a manufacturer accompanied by a satisfactory justification.

(h) The manufacturer must perform test engine selection, shipping, preparation, service accumulation, and testing in such a manner as to assure that the audit is performed in an expeditious manner.

(i) *Retesting.* (1) The manufacturer may retest any engines tested during a Selective Enforcement Audit once a fail decision for the audit has been reached in accordance with § 89.510–96(e).

(2) The Administrator may approve retesting at other times based upon a request by the manufacturer accompanied by a satisfactory justification.

(3) The manufacturer may retest each engine a total of three times. The manufacturer must test each engine or vehicle the same number of times. The manufacturer may accumulate additional service before conducting a retest, subject to the provisions of paragraph (c) of this section.

(j) A manufacturer must test engines with the test procedure specified in subpart E of this part to demonstrate compliance with the exhaust emission standard (or applicable FEL) for oxides of nitrogen. If alternate procedures were used in certification pursuant to § 89.114–96, then those alternate procedures must be used.

§ 89.509–96 Calculation and reporting of test results.

(a) Initial test results are calculated following the applicable test procedure specified in paragraph (a) of § 89.508–96. The manufacturer rounds these results, in accordance with ASTM E29–90, to the number of decimal places contained in the applicable emission standard expressed to one additional significant figure. This procedure has been incorporated by reference. See § 89.6.

(b) Final test results are calculated by summing the initial test results derived in paragraph (a) of this section for each test engine, dividing by the number of tests conducted on the engine, and rounding in accordance with ASTM E29–90 to the same number of decimal places contained in the applicable standard expressed to one additional significant figure.

(c) Within five working days after completion of testing of all engines pursuant to a test order, the manufacturer must submit to the Administrator a report which includes the following information:

(1) The location and description of the manufacturer's exhaust emission test facilities which were utilized to conduct testing reported pursuant to this section;

(2) The applicable standards and/or FEL against which the engines were tested;

(3) A description of the engine and its associated emission-related component selection method used;

(4) For each test conducted;

(i) Test engine description, including:

(A) Configuration and engine family identification;

(B) Year, make, and build date;

(C) Engine identification number; and

(D) Number of hours of service accumulated on engine prior to testing;

(ii) Location where service accumulation was conducted and description of accumulation procedure and schedule;

(iii) Test number, date, test procedure used, initial test results before and after rounding, and final test results for all exhaust emission tests, whether valid or invalid, and the reason for invalidation, if applicable;

(iv) A complete description of any modification, repair, preparation, maintenance, and/or testing which was performed on the test engine and has not been reported pursuant to any other paragraph of this subpart and will not be performed on all other production engines;

(v) Where an engine was deleted from the test sequence by authorization of the Administrator, the reason for the deletion;

(vi) Any other information the Administrator may request relevant to the determination as to whether the new engines being manufactured by the manufacturer do in fact conform with the regulations with respect to which the certificate of conformity was issued; and

(5) The following statement and endorsement:

This report is submitted pursuant to sections 213 and 208 of the Clean Air Act. This Selective Enforcement Audit was conducted in complete conformance with all applicable regulations under 40 CFR part 89 *et seq.* and the conditions of the test order. No emission-related changes to production processes or quality control procedures for the engine family tested have been made between receipt of the test order and conclusion of the audit. All data and information reported herein is, to the best of (Company Name) knowledge, true and accurate. I am aware of the penalties associated with violations of the Clean Air Act and the regulations thereunder. (Authorized Company Representative.)

§89.510–96 Compliance with acceptable quality level and passing and failing criteria for selective enforcement audits.

(a) The prescribed acceptable quality level is 40 percent.

(b) A failed engine is one whose final test results pursuant to §89.509–96(b), for one or more of the applicable pollutants, exceed the applicable emission standard or family emission level.

(c) The manufacturer must test engines comprising the test sample until a pass decision is reached for all pollutants or a fail decision is reached for one pollutant. A pass decision is reached when the cumulative number of failed engines, as defined in paragraph (b) of this section, for each pollutant is less than or equal to the pass decision number, as defined in paragraph (d) of this section, appropriate to the cumulative number of engines tested. A fail decision is reached when the cumulative number of failed engines for one or more pollutants is greater than or equal to the fail decision number, as defined in paragraph (d) of this section, appropriate to the cumulative number of engines tested.

(d) The pass and fail decision numbers associated with the cumulative number of engines tested are determined by using the tables in appendix A to this subpart, ''Sampling Plans for Selective Enforcement Auditing of Nonroad Engines,'' appropriate to the projected sales as made by the manufacturer in its report to EPA under §89.505–96(c)(1). In the tables in appendix A to this subpart, sampling plan ''stage'' refers to the cumulative number of engines tested. Once a pass or fail decision has been made for a particular pollutant, the number of engines with final test results exceeding the emission standard for that pollutant shall not be considered any further for the purposes of the audit.

(e) Passing or failing of an SEA occurs when the decision is made on the last engine required to make a decision under paragraph (c) of this section.

(f) The Administrator may terminate testing earlier than required in paragraph (c) of this section.

§89.511–96 Suspension and revocation of certificates of conformity.

(a) The certificate of conformity is suspended with respect to any engine failing pursuant to paragraph (b) of §89.510–96 effective from the time that testing of that engine is completed.

(b) The Administrator may suspend the certificate of conformity for a family which does not pass an SEA, pursuant to paragraph §89.510–96(c), based on the first test or all tests conducted on each engine. This suspension will not

occur before ten days after failure of the audit, unless the manufacturer requests an earlier suspension.

(c) If the results of testing pursuant to these regulations indicate that engines of a particular family produced at one plant of a manufacturer do not conform to the regulations with respect to which the certificate of conformity was issued, the Administrator may suspend the certificate of conformity with respect to that family for engines manufactured by the manufacturer at all other plants.

(d) Notwithstanding the fact that engines described in the application may be covered by a certificate of conformity, the Administrator may suspend such certificate immediately in whole or in part if the Administrator finds any one of the following infractions to be substantial:

(1) The manufacturer refuses to comply with the provisions of a test order issued by the Administrator under § 89.503–96.

(2) The manufacturer refuses to comply with any of the requirements of this subpart.

(3) The manufacturer submits false or incomplete information in any report or information provided to the Administrator under this subpart.

(4) The manufacturer renders inaccurate any test data submitted under this subpart.

(5) An EPA enforcement officer(s) or EPA authorized representative(s) is denied the opportunity to conduct activities related to entry and access as authorized in this subpart and a warrant or court order is presented to the manufacturer or the party in charge of a facility in question.

(6) An EPA enforcement officer(s) or EPA authorized representative(s) is unable to conduct activities related to entry and access as authorized in § 89.506–96 because a manufacturer has located a facility in a foreign jurisdiction where local law prohibits those activities.

(e) The Administrator must notify the manufacturer in writing of any suspension or revocation of a certificate of conformity in whole or in part; a suspension or revocation is effective upon receipt of the notification or ten days, except that the certificate is immediately suspended with respect to any failed engines as provided for in paragraph (a) of this section.

(f) The Administrator may revoke a certificate of conformity for a family when the certificate has been suspended pursuant to paragraph (b) or (c) of this section if the proposed remedy for the nonconformity, as reported by the manufacturer to the Administrator, is one requiring a design change or changes to the engine and/or emission control system as described in the application for certification of the affected family.

(g) Once a certificate has been suspended for a failed engine, as provided for in paragraph (a) of this section, the manufacturer must take the following actions before the certificate is reinstated for that failed engine:

(1) Remedy the nonconformity.

(2) Demonstrate that the engine conforms to applicable standards or family emission levels by retesting the engine in accordance with these regulations.

(3) Submit a written report to the Administrator, after successful completion of testing on the failed engine, which contains a description of the remedy and test results for each engine in addition to other information that may be required by this part.

(h) Once a certificate for a failed family has been suspended pursuant to paragraph (b) or (c) of this section, the manufacturer must take the following actions before the Administrator will consider reinstating the certificate:

(1) Submit a written report to the Administrator which identifies the reason for the noncompliance of the engines, describes the proposed remedy, including a description of any proposed quality control and/or quality assurance measures to be taken by the manufacturer to prevent future occurrences of the problem, and states the date on which the remedies will be implemented.

(2) Demonstrate that the engine family for which the certificate of conformity has been suspended does in fact comply with these regulations by testing engines selected from normal production runs of that engine family, at the plant(s), port facility(ies) or associated storage facility(ies) specified by the Administrator, in accordance with

the conditions specified in the initial test order. If the manufacturer elects to continue testing individual engines after suspension of a certificate, the certificate is reinstated for an engine actually determined to be in conformance with the applicable standards or family emission levels through testing in accordance with the applicable test procedures, provided that the Administrator has not revoked the certificate pursuant to paragraph (f) of this section.

(i) Once the certificate for a family has been revoked under paragraph (f) of this section and the manufacturer desires to continue introduction into commerce of a modified version of that family, the following actions must be taken before the Administrator may consider issuing a certificate for that modified family:

(1) If the Administrator determines that the proposed change(s) in engine design may have an effect on emission performance deterioration, the Administrator will notify the manufacturer, within five working days after receipt of the report in paragraph (g) of this section, whether subsequent testing under this subpart is sufficient to evaluate the proposed change or changes or whether additional testing is required; and

(2) After implementing the change or changes intended to remedy the nonconformity, the manufacturer must demonstrate that the modified engine family does in fact conform with these regulations by testing engines selected from normal production runs of that modified engine family in accordance with the conditions specified in the initial test order. If the subsequent audit results in passing of the audit, the Administrator will reissue the certificate or issue a new certificate, as the case may be, to include that family, provided that the manufacturer has satisfied the testing requirements of paragraph (i)(1) of this section. If the subsequent audit is failed, the revocation remains in effect. Any design change approvals under this subpart are limited to the family affected by the test order.

(j) At any time subsequent to an initial suspension of a certificate of conformity for a test engine pursuant to paragraph (a) of this section, but not later than 15 days (or such other period as may be allowed by the Administrator) after notification of the Administrator's decision to suspend or revoke a certificate of conformity in whole or in part pursuant to paragraph (b), (c), or (f) of this section, a manufacturer may request a hearing as to whether the tests have been properly conducted or any sampling methods have been properly applied.

(k) Any suspension of a certificate of conformity under paragraph (d) of this section:

(1) will be in writing and will include the offer of an opportunity for a hearing conducted in accordance with §§89.512–96, 89.513–96, and 89.514–96 and

(2) need not apply to engines no longer in the hands of the manufacturer.

(l) After the Administrator suspends or revokes a certificate of conformity pursuant to this section and prior to the commencement of a hearing under §89.512–96, if the manufacturer demonstrates to the Administrator's satisfaction that the decision to suspend, revoke, or void the certificate was based on erroneous information, the Administrator will reinstate the certificate.

(m) To permit a manufacturer to avoid storing non-test engines when conducting an audit of a family subsequent to a failure of an SEA and while reauditing of the failed family, it may request that the Administrator conditionally reinstate the certificate for that family. The Administrator may reinstate the certificate subject to the condition that the manufacturer consents to recall all engines of that family produced from the time the certificate is conditionally reinstated if the family fails the subsequent audit at the level of the standard and to remedy any nonconformity at no expense to the owner.

§89.512–96 Request for public hearing.

(a) If the manufacturer disagrees with the Administrator's decision under §89.511–96 (b), (c), (d), or (f) to suspend or revoke a certificate or disputes the basis for an automatic suspension pursuant to §89.511–96 (a), the

manufacturer may request a public hearing.

(b) The manufacturer's request must be filed with the Administrator not later than 15 days after the Administrator's notification of the decision to suspend or revoke, unless otherwise specified by the Administrator. The manufacturer must simultaneously serve two copies of this request upon the Director of the Manufacturers Operations Division and file two copies with the Hearing Clerk of the Agency. Failure of the manufacturer to request a hearing within the time provided constitutes a waiver of the right to a hearing. Subsequent to the expiration of the period for requesting a hearing as of right, the Administrator may, at her or his discretion and for good cause shown, grant the manufacturer a hearing to contest the suspension or revocation.

(c) The manufacturer's request for a public hearing must include:

(1) A statement as to which engine configuration(s) within a family is to be the subject of the hearing;

(2) A concise statement of the issues to be raised by the manufacturer at the hearing, except that in the case of the hearing requested under § 89.511–96(j), the hearing is restricted to the following issues:

(i) Whether tests have been properly conducted, specifically, whether the tests were conducted in accordance with applicable regulations under this part and whether test equipment was properly calibrated and functioning;

(ii) Whether sampling plans have been properly applied, specifically, whether sampling procedures specified in appendix A of this subpart were followed and whether there exists a basis for distinguishing engines produced at plants other than the one from which engines were selected for testing which would invalidate the Administrator's decision under § 89.511–96(c);

(3) A statement specifying reasons why the manufacturer believes it will prevail on the merits of each of the issues raised; and

(4) A summary of the evidence which supports the manufacturer's position on each of the issues raised.

(d) A copy of all requests for public hearings will be kept on file in the Office of the Hearing Clerk and will be made available to the public during Agency business hours.

§ 89.513–96 Administrative procedures for public hearing.

(a) The Presiding Officer is an Administrative Law Judge appointed pursuant to 5 U.S.C. 3105 (see also 5 CFR part 930 as amended).

(b) The Judicial Officer is an officer or employee of the Agency appointed as a Judicial Officer by the Administrator, pursuant to this section, who meets the qualifications and performs functions as follows:

(1) *Qualifications.* A Judicial Officer may be a permanent or temporary employee of the Agency who performs other duties for the Agency. The Judicial Officer may not be employed by the Office of Enforcement or have any connection with the preparation or presentation of evidence for a hearing held pursuant to this subpart. The Judicial Officer must be a graduate of an accredited law school and a member in good standing of a recognized Bar Association of any state or the District of Columbia.

(2) *Functions.* The Administrator may consult with the Judicial Officer or delegate all or part of the Administrator's authority to act in a given case under this section to a Judicial Officer, provided that this delegation does not preclude the Judicial Officer from referring any motion or case to the Administrator when the Judicial Officer determines such referral to be appropriate.

(c) For the purposes of this section, one or more Judicial Officers may be designated. As work requires, a Judicial Officer may be designated to act for the purposes of a particular case.

(d) *Summary decision.* (1) In the case of a hearing requested under § 89.511–96(j), when it clearly appears from the data and other information contained in the request for a hearing that no genuine and substantial question of fact or law exists with respect to the issues specified in § 89.512–96(c)(2), the Administrator may enter an order denying the request for a hearing and reaffirming the original decision to suspend or revoke a certificate of conformity.

(2) In the case of a hearing requested under §89.512–96 to challenge a suspension of a certificate of conformity for the reasons specified in §89.511–96(d), when it clearly appears from the data and other information contained in the request for the hearing that no genuine and substantial question of fact or law exists with respect to the issue of whether the refusal to comply with the provisions of a test order or any other requirement of §89.503–96 was caused by conditions and circumstances outside the control of the manufacturer, the Administrator may enter an order denying the request for a hearing and suspending the certificate of conformity.

(3) Any order issued under paragraph (d)(1) or (d)(2) of this section has the force and effect of a final decision of the Administrator, as issued pursuant to §89.515–96.

(4) If the Administrator determines that a genuine and substantial question of fact or law does exist with respect to any of the issues referred to in paragraphs (d)(1) and (d)(2) of this section, the Administrator will grant the request for a hearing and publish a notice of public hearing in the FEDERAL REGISTER or by such other means as the Administrator finds appropriate to provide notice to the public.

(e) *Filing and service.* (1) An original and two copies of all documents or papers required or permitted to be filed pursuant to this section and §89.512–96(c) must be filed with the Hearing Clerk of the Agency. Filing is considered timely if mailed, as determined by the postmark, to the Hearing Clerk within the time allowed by this section and §89.512–96(b). If filing is to be accomplished by mailing, the documents must be sent to the address set forth in the notice of public hearing referred to in paragraph (d)(4) of this section.

(2) To the maximum extent possible, testimony will be presented in written form. Copies of written testimony will be served upon all parties as soon as practicable prior to the start of the hearing. A certificate of service will be provided on or accompany each document or paper filed with the Hearing Clerk. Documents to be served upon the Director of the Manufacturers Operations Division must be sent by registered mail to: Director, Manufacturers Operations Division, U.S. Environmental Protection Agency, 6405–J, 401 M Street SW, Washington, DC 20460. Service by registered mail is complete upon mailing.

(f) *Computation of time.* (1) In computing any period of time prescribed or allowed by this section, except as otherwise provided, the day of the act or event from which the designated period of time begins to run is not included. Saturdays, Sundays, and federal legal holidays are included in computing the period allowed for the filing of any document or paper, except that when the period expires on a Saturday, Sunday, or federal legal holiday, the period is extended to include the next following business day.

(2) A prescribed period of time within which a party is required or permitted to do an act is computed from the time of service, except that when service is accomplished by mail, three days will be added to the prescribed period.

(g) *Consolidation.* The Administrator or the Presiding Officer in his discretion may consolidate two or more proceedings to be held under this section for the purpose of resolving one or more issues whenever it appears that consolidation will expedite or simplify consideration of these issues. Consolidation does not affect the right of any party to raise issues that could have been raised if consolidation had not occurred.

(h) *Hearing date.* To the extent possible hearings under §89.512–96 will be scheduled to commence within 14 days of receipt of the application in §89.512–96.

§89.514–96 Hearing procedures.

The procedures provided in §86.1014–84 (i) to (s) apply for hearings requested pursuant to §89.512–96, suspension, revocation, or voiding of a certificate of conformity.

§89.515–96 Appeal of hearing decision.

The procedures provided in §86.1014–84 (t) to (aa) apply for appeals filed with respect to hearings held pursuant to §89.514–96.

§ 89.516–96 Treatment of confidential information.

The provisions for treatment of confidential information as described in § 89.7 apply.

APPENDIX A TO SUBPART F—SAMPLING PLANS FOR SELECTIVE ENFORCEMENT AUDITING OF NONROAD ENGINES

TABLE 1.—SAMPLING PLAN CODE LETTER

Annual engine family sales	Code letter
20–50	AA[1]
20–99	A
100–299	B
300–299	C
500 or greater	D

[1] A manufacturer may optionally use either the sampling plan for code letter ''AA'' or sampling plan for code letter ''A'' for Selective Enforcement Audits of engine families with annual sales between 20 and 50 engines. Additionally, the manufacturer may switch between these plans during the audit.

TABLE 2.—SAMPLING PLAN FOR CODE LETTER ''AA''

[Sample inspection criteria]

Stage	Pass No.	Fail No.
1	(1)	(2)
2	(1)	(2)
3	0	(2)
4	0	(2)
5	1	5
6	1	6
7	2	6
8	2	7
9	3	7
10	3	8
11	4	8
12	4	9
13	5	9
14	5	10
15	6	10
16	6	10
17	7	10
18	8	10
19	8	10
20	9	10

[1] Test sample passing not permitted at this stage.
[2] Test sample failure not permitted at this stage.

TABLE 3.—SAMPLING PLAN FOR CODE LETTER ''A''

[Sample inspection criteria]

Stage	Pass No.	Fail No.
1	(1)	(2)
2	(1)	(2)
3	(1)	(2)
4	0	(2)
5	0	(2)
6	1	6
7	1	7
8	2	7
9	2	8
10	3	8
11	3	8

TABLE 3.—SAMPLING PLAN FOR CODE LETTER ''A''—Continued

[Sample inspection criteria]

Stage	Pass No.	Fail No.
12	4	9
13	5	10
14	5	10
15	6	11
16	6	11
17	7	12
18	7	12
19	8	13
20	8	13
21	9	14
22	10	14
23	10	15
24	11	15
25	11	16
26	12	16
27	12	17
28	13	17
29	14	17
30	16	17

[1] Test sample passing not permitted at this stage.
[2] Test sample failure not permitted at this stage.

TABLE 4.—SAMPLING PLAN FOR CODE LETTER ''B''

[Sample Inspection Criteria]

Stage	Pass No.	Fail No.
1	(1)	(2)
2	(1)	(2)
3	(1)	(2)
4	(1)	(2)
5	0	(2)
6	1	6
7	1	7
8	2	7
9	2	8
10	3	8
11	3	9
12	4	9
13	4	10
14	5	10
15	5	11
16	6	12
17	6	12
18	7	13
19	8	13
20	8	14
21	9	14
22	9	15
23	10	15
24	10	16
25	11	16
26	11	17
27	12	17
28	12	18
29	13	18
30	13	19
31	14	19
32	14	20
33	15	20
34	16	21
35	16	21
36	17	22
37	17	22
38	18	22
39	18	22
40	21	22

[1] Test sample passing not permitted at this stage.

[2] Test sample failure not permitted at this stage.

TABLE 5.—SAMPLING PLAN FOR CODE LETTER "C"

[Sample Inspection Criteria]

Stage	Pass No.	Fail No.
1	(1)	(2)
2	(1)	(2)
3	(1)	(2)
4	(1)	(2)
5	0	(2)
6	0	6
7	1	7
8	2	7
9	2	8
10	3	9
11	3	9
12	4	10
13	4	10
14	5	11
15	5	11
16	6	12
17	6	12
18	7	13
19	7	13
20	8	14
21	8	14
22	9	15
23	10	15
24	10	16
25	11	16
26	11	17
27	12	17
28	12	18
29	13	18
30	13	19
31	14	19
32	14	20
33	15	20
34	15	21
35	16	21
36	16	22
37	17	22
38	18	23
39	18	23
40	19	24
41	19	24
42	20	25
43	20	25
44	21	26
45	21	27
46	22	27
47	22	27
48	23	27
49	23	27
50	26	27

[1] Test sample passing not permitted at this stage.
[2] Test sample failure not permitted at this stage.

TABLE 6.—SAMPLING PLAN FOR CODE LETTER "D"

[Sample Inspection Criteria]

Stage	Pass No.	Fail No.
1	(1)	(2)
2	(1)	(2)
3	(1)	(2)
4	(1)	(2)
5	0	(2)
6	0	6
7	1	7

TABLE 6.—SAMPLING PLAN FOR CODE LETTER "D"—Continued

[Sample Inspection Criteria]

Stage	Pass No.	Fail No.
8	2	8
9	2	8
10	3	9
11	3	9
12	4	10
13	4	10
14	5	11
15	5	11
16	6	12
17	6	12
18	7	13
19	7	13
20	8	14
21	8	14
22	9	15
23	9	15
24	10	16
25	11	16
26	11	17
27	12	17
28	12	18
29	13	19
30	13	19
31	14	20
32	14	20
33	15	21
34	15	21
35	16	22
36	16	22
37	17	23
38	17	23
39	18	24
40	18	24
41	19	25
42	19	26
43	20	26
44	21	27
45	21	27
46	22	28
47	22	28
48	23	29
49	23	29
50	24	30
51	24	30
52	25	31
53	25	31
54	26	32
55	26	32
56	27	33
57	27	33
58	28	33
59	28	33
60	32	33

[1] Test sample passing not permitted at this stage.
[2] Test sample failure not permitted at this stage.

Subpart G—Importation of Nonconforming Nonroad Engines

§ 89.601–96 Applicability.

(a) Except where otherwise indicated, this subpart is applicable to nonroad engines for which the Administrator has promulgated regulations under this part prescribing emission standards and nonroad vehicles and equipment

containing such nonroad engines that are offered for importation or imported into the United States, but which engines, at the time of conditional importation, are not covered by certificates of conformity issued under section 213 and section 206(a) of the Clean Air Act as amended (that is, which are nonconforming nonroad engines as defined in § 89.602–96), and this part. Compliance with regulations under this subpart does not relieve any person or entity from compliance with other applicable provisions of the Clean Air Act.

(b) Regulations prescribing further procedures for the importation of nonroad engines and nonroad vehicles and equipment into the customs territory of the United States, as defined in 19 U.S.C. 1202, are set forth in U.S. Bureau of Customs regulations.

(c) For the purposes of this subpart, the term ''nonroad engine'' includes all nonroad engines incorporated into nonroad equipment or nonroad vehicles at the time they are imported or offered for import into the United States.

§ 89.602–96 Definitions.

The definitions in subpart A of this part apply to this subpart. The following definitions also apply to this subpart.

Certificate of conformity. The document issued by the Administrator under section 213 and section 206(a) of the Act.

Currently valid certificate of conformity. A certificate of conformity for which the current date is within the effective period as specified on the certificate of conformity, and which has not been withdrawn, superseded, voided, suspended, revoked, or otherwise rendered invalid.

Fifteen working day hold period. The period of time between a request for final admission and the automatic granting of final admission (unless EPA intervenes) for a nonconforming nonroad engine conditionally imported pursuant to § 89.605–96 or § 89.609–96. Day one of the hold period is the first working day (see definition below) after the Manufacturers Operations Division of EPA receives a complete and valid application for final admission.

Independent commercial importer (ICI). An importer who is not an original engine manufacturer (OEM) (see definition below), but is the entity in whose name a certificate of conformity for a class of nonroad engines has been issued.

Model year for imported engines. The manufacturer's annual production period (as determined by the Administrator) which includes January 1 of the calendar year; provided, that if the manufacturer has no annual production period, the term ''model year'' means the calendar year in which a nonroad engine is modified. An independent commercial importer (ICI) is deemed to have produced a nonroad engine when the ICI has modified (including labeling) the nonconforming nonroad engine to meet applicable emission requirements.

Nonconforming nonroad engine. A nonroad engine which is not covered by a certificate of conformity prior to final or conditional admission (or for which such coverage has not been adequately demonstrated to EPA) and which has not been finally admitted into the United States under the provisions of § 89.605–96 or § 89.609–96.

Original engine manufacturer (OEM). The entity which originally manufactured the nonroad engine.

Original production (OP) year. The calendar year in which the nonroad engine was originally produced by the OEM.

Original production (OP) years old. The age of a nonroad engine as determined by subtracting the original production year of the nonroad engine from the calendar year of importation.

Production changes. Those changes in nonroad engine configuration, equipment, or calibration which are made by an OEM or ICI in the course of nonroad engine production and required to be reported under § 89.123–96.

United States. United States includes the customs territory of the United States as defined in 19 U.S.C. 1202, and the Virgin Islands, Guam, American Samoa, and the Commonwealth of the Northern Mariana Islands.

Useful life. A period of time as specified in subpart B of this part which for a nonconforming nonroad engine begins at the time of resale (for a nonroad engine owned by the ICI at the time of importation) or release to the owner (for a nonroad engine not owned

by the ICI at the time of importation) of the nonroad engine by the ICI after modification and/or testing pursuant to §89.605–96 or §89.609–96.

Working day. Any day on which federal government offices are open for normal business. Saturdays, Sundays, and official federal holidays are not working days.

§89.603–96 General requirements for importation of nonconforming nonroad engines.

(a) A nonconforming nonroad engine offered for importation into the United States is to be imported only by an Independent Commercial Importer (ICI) who is a holder of a currently valid certificate of conformity unless an exemption or exclusion is granted by the Administrator under §89.611–96 of this subpart. For a nonroad engine imported pursuant to §89.605–96, the ICI must hold a currently valid certificate of conformity for that specific nonroad engine model.

(b) Any nonroad engine imported into the United States must have a legible unique engine identification number permanently affixed to or engraved on the engine.

(c) Final admission may not be granted unless:

(1) The nonroad engine is covered by a certificate of conformity issued under subpart B of this part in the name of the ICI and the ICI has complied with all requirements of §89.605–96; or

(2) The nonroad engine is modified and emission tested in accordance with the provisions of §89.609–96 and the ICI has complied with all other requirements of §89.609–96; or

(3) The nonroad engine is exempted or excluded under §89.611–96.

(d) The ICI must submit to the Manufacturers Operations Division of EPA a copy of all approved applications for certification used to obtain certificates of conformity for the purpose of importing nonconforming nonroad engines pursuant to §89.605–96 or §89.609–96. In addition, the ICI must submit to the Manufacturers Operations Division a copy of all approved production changes implemented pursuant to §89.605–96 or subpart B of this part. Documentation submitted pursuant to this paragraph must be provided to the Manufacturers Operations Division within 10 working days of approval of the certification application (or production change) by the Certification Division of EPA.

§89.604–96 Conditional admission.

(a) A nonroad engine offered for importation under §89.605–96 or §89.609–96 may be conditionally admitted into the United States. These engines are refused final admission, unless at the time of conditional admission the importer has submitted to the Administrator a written report that the subject nonroad engine has been permitted conditional admission pending EPA approval of its application for final admission under §89.605–96 or §89.609–96. This written report is to contain the following:

(1) Identification of the importer of the nonroad engine and the importer's address, telephone number, and taxpayer identification number;

(2) Identification of the nonroad engine owner, the owner's address, telephone number, and taxpayer identification number;

(3) Identification of the nonroad engine including make, model, identification number, and original production year;

(4) Information indicating under what provision of these regulations the nonroad engine is to be imported;

(5) Identification of the place where the subject nonroad engine is to be stored until EPA approval of the importer's application to the Administrator for final admission;

(6) Authorization for EPA enforcement officers to conduct inspections or testing otherwise permitted by the Act or regulations thereunder;

(7) Identification of the Independent Commercial Importer's (ICI) certificate of conformity that permits the ICI to import that nonroad engine (for importation under §89.605–96 or §89.609–96); and

(8) Such other information as is deemed necessary by the Administrator.

(b) EPA will not require a U.S. Customs Service bond for a nonconforming nonroad engine which is imported

under § 89.605–96 or § 89.609–96. The period of conditional admission may not exceed 120 days. Nonroad engines imported under § 89.605–96 or § 89.609–96 may not be operated during the period of conditional admission except for that operation necessary to comply with the requirements of this subpart. During the period of conditional admission applicable to § 89.605–96 or § 89.609–96, the importer must store the nonroad engine at a location where the Administrator has reasonable access to the nonroad engine for inspection.

(c) During the period of conditional admission under § 89.605–96 or § 89.609–96, an ICI may transfer responsibility of a nonroad engine to another qualified ICI for the purposes of complying with this subpart.

(1) The transferee ICI must be a holder of a currently valid certificate of conformity for the specific nonroad engine being transferred or be authorized to import the nonroad engine pursuant to § 89.609–96 as of the transfer date. The transferee ICI must comply with all the requirements of § 89.603–96, § 89.604–96, and either § 89.605–96 or § 89.609–96, as applicable.

(2) For the purpose of this subpart, the transferee ICI has ''imported'' the nonroad engine as of the transfer date as designated in a written record that is signed by both ICIs.

(3) The ICI that originally imported the nonroad engine is responsible for all requirements of this subpart from the actual date of importation until the date of transfer as designated in the written record. The transferee ICI is responsible for all requirements of this subpart beginning on the date of transfer.

(4) A copy of the written record is to be submitted to the Manufacturers Operations Division of EPA within five working days of the transfer date.

(d) Notwithstanding any other requirement of this subpart or U.S. Customs Service regulations, an ICI may also assume responsibility for the modification and testing of a nonconforming nonroad engine which was previously imported by another party. The ICI must be a holder of a currently valid certificate of conformity for that specific nonroad engine or authorized to import it pursuant to § 89.609–96 at the time of assuming such responsibility. The ICI must comply with all the requirements of § 89.603–96, § 89.604–96, and either § 89.605–96 or § 89.609–96, as applicable. For the purposes of this subpart, the ICI has ''imported'' the nonroad engine as of the date the ICI assumes responsibility for the modification and testing of the nonroad engine. The ICI must submit written notification to the Manufacturers Operations Division of EPA within 10 working days of the assumption of that responsibility.

§ 89.605–96 Final admission of certified nonroad engines.

(a) A nonroad engine may be finally admitted into the United States upon approval of the ICI's application to the Administrator. The application is made by completing EPA forms in accordance with EPA instructions. The application contains:

(1) The information required in § 89.604–96(a);

(2) Information demonstrating that the nonroad engine has been modified in accordance with a valid certificate of conformity. Demonstration is made in one of the following ways:

(i) The ICI attests that the nonroad engine has been modified in accordance with the provisions of the ICI's certificate of conformity; presents to EPA a statement written by the applicable Original Engine Manufacturer (OEM) that the OEM must provide to the ICI, and to EPA, information concerning production changes to the class of nonroad engines described in the ICI's application for certification; delivers to the Manufacturers Operations Division of EPA notification by the ICI of any production changes already implemented by the OEM at the time of application and their effect on emissions; and obtains from EPA written approval to use this demonstration option; or

(ii) The ICI attests that the nonroad engine has been modified in accordance with the provisions of the ICI's certificate of conformity. The ICI also attests that it has conducted, within 120 days of entry, an applicable and valid emission test on every third nonroad engine imported under that certificate of conformity to demonstrate compliance with federal emission requirements.

The test is to be conducted at a laboratory located within the United States. Sequencing of the tests is determined by the date of importation of each nonroad engine beginning with the prototype nonroad engine used to obtain the applicable certificate of conformity. Should the ICI exceed a threshold of 300 nonroad engines imported under the certificate of conformity without adjustments or other changes in accordance with paragraph (a)(3) of this section, the amount of required testing is reduced to every fifth nonroad engine.

(3) The results of every emission test which the ICI conducted on the nonroad engine pursuant to paragraph (a)(2)(ii) of this section. Should a subject nonroad engine fail an emission test at any time, the following procedures are applicable:

(i) The ICI may either:

(A) Conduct one retest that involves no adjustment of the nonroad engine from the previous test (for example, adjusting the RPM, timing, air-to-fuel ratio, and so forth) other than adjustments to adjustable parameters that, upon inspection, were found to be out of tolerance. When such an allowable adjustment is made, the parameter may be reset only to the specified (that is, nominal) value (and not any other value within the tolerance band); or

(B) Initiate a change in production (production change) under the provisions of subpart B of this part that causes the nonroad engine to meet federal emission requirements.

(ii) If the ICI chooses to retest in accordance with paragraph (a)(3)(i)(A) of this section:

(A) The retests are to be completed no later than five working days subsequent to the first emission test;

(B) Should the subject nonroad engine fail the second emission test, then the ICI must initiate a change in production (a production change) under the provisions of subpart B of this part that causes the nonroad engine to meet federal emission requirements.

(iii) If the ICI chooses to initiate a change in production (a production change) under the provisions of subpart B of this part that causes the nonroad engine to meet federal requirements, a change involving adjustments of adjustable nonroad engine parameters (for example, adjusting the RPM, timing, air/fuel ratio) represents a change in the specified (that is, nominal) value to be deemed acceptable by EPA.

(iv) A production change made in accordance with this section is to be implemented on all subsequent nonroad engines imported under the certificate of conformity after the date of importation of the nonroad engine which gave rise to the production change.

(v) Commencing with the first nonroad engine receiving the production change, every third nonroad engine imported under the certificate of conformity is to be emission tested to demonstrate compliance with federal emission requirements until, as in paragraph (a)(2)(ii) of this section, a threshold of 300 nonroad engines imported under the certificate of conformity is exceeded without adjustments or other changes in accordance with paragraph (a)(3)(i)(A) of this section, at which time the amount of required emission testing is reduced to every fifth nonroad engine.

(vi) A report concerning these production changes is to be made to both the Manufacturers Operations and Certification Divisions of EPA within ten working days of initiation of the production change. The cause of any failure of an emission test is to be identified, if known;

(4) The applicable deterioration factor, if any;

(5) The emission test results adjusted by the deterioration factor;

(6) Other information that may be specified by applicable regulations or on the certificate of conformity under which the nonroad engine has been modified in order to assure compliance with requirements of the Act;

(7) All information required under §89.610–96 related to maintenance, warranties, and labeling;

(8) An attestation by the ICI that the ICI is responsible for the nonroad engine's compliance with federal emission requirements, regardless of whether the ICI owns the nonroad engine imported under this section;

(9) The name, address, and telephone number of the person who the ICI prefers to receive EPA notification under §89.605–96(c);

(10) An attestation by the ICI that all requirements of § 89.607–96 and § 89.610–96 have been met; and

(11) Other information as is deemed necessary by the Administrator.

(b) EPA approval for final admission of a nonroad engine under this section is to be presumed not to have been granted if a requirement of this subpart has not been met. This includes, but is not limited to, properly modifying the nonroad engine to be in conformity in all material respects with the description in the application for certification or not complying with the provisions of § 89.605–96(a)(2) or if the final emission test results, adjusted by the deterioration factor, if applicable, do not comply with applicable emission standards.

(c) Except as provided in paragraph (b) of this section, EPA approval for final admission of a nonroad engine under this section is presumed to have been granted if the ICI does not receive oral or written notice from EPA to the contrary within 15 working days of the date that the Manufacturers Operations Division of EPA receives the ICI's application under paragraph (a) of this section. EPA notice of non-approval may be made to any employee of the ICI. It is the responsibility of the ICI to ensure that the Manufacturers Operations Division of EPA receives the application and to confirm the date of receipt. During this 15 working day hold period, the nonroad engine is to be stored at a location where the Administrator has reasonable access to the nonroad engine for the Administrator's inspection. The storage is to be within 50 miles of the ICI's testing facility to allow the Administrator reasonable access for inspection and/or testing. A storage facility not meeting this criterion must be approved in writing by the Administrator prior to the submittal of the ICI's application under paragraph (a) of this section.

§ 89.606–96 Inspection and testing of imported nonroad engines.

(a) In order to allow the Administrator to determine whether an ICI's production nonroad engines comply with applicable emission requirements or requirements of this subpart, an EPA enforcement officer or authorized representative is authorized to conduct inspections and/or tests of nonroad engines imported by the ICI. The ICI must admit an EPA enforcement officer or authorized representative during operating hours to any of the following places upon demand and upon presentation of credentials:

(1) Any facility where any nonroad engine imported by the ICI under this subpart was or is being modified, tested, or stored and

(2) Any facility where any record or other document relating to modification, testing, or storage of the nonroad engine, or required to be kept by § 89.607–96, is located. EPA may require inspection or testing of nonroad engines at the test facility used by the ICI or at an EPA-designated testing facility, with transportation and/or testing costs to be borne by the ICI.

(b) Upon admission to any facility referred to in paragraph (a) of this section, an EPA enforcement officer or authorized representative is allowed during operating hours:

(1) To inspect and monitor any part or aspect of activities relating to the ICI's modification, testing, and/or storage of nonroad engines imported under this subpart;

(2) To inspect and make copies of record(s) or document(s) related to modification, testing, and storage of a nonroad engine, or required by § 89.607–96; and

(3) To inspect and photograph any part or aspect of the nonroad engine and any component used in the assembly thereof.

(c) An EPA enforcement officer or authorized representative is to be furnished, by those in charge of a facility being inspected, with such reasonable assistance as the officer or representative may request to help discharge any function listed in this subpart. An ICI must make arrangements with those in charge of a facility operated for its benefit to furnish such reasonable assistance without charge to EPA. Reasonable assistance includes, but is not limited to, clerical, copying, interpretation and translation services, and the making available on request of personnel of the facility being inspected during their working hours to inform the EPA enforcement officer or authorized

representative of how the facility operates and to answer any questions.

(d) The requirements of paragraphs (a), (b), and (c) of this section apply whether or not the ICI owns or controls the facility in question. It is the ICI's responsibility to make such arrangements as may be necessary to assure compliance with paragraphs (a), (b), and (c) of this section. Failure to do so, or other failure to comply with paragraphs (a), (b), or (c), may result in sanctions as provided for in the Act or §89.612–96(e).

(e) Duly designated enforcement officers are authorized to proceed ex parte to seek warrants authorizing the inspection or testing of the nonroad engines described in paragraph (a) of this section whether or not the enforcement officers first attempted to seek permission from the ICI or facility owner to inspect such nonroad engines.

(f) The results of the Administrator's test under this section comprise the official test data for the nonroad engine for purposes of determining whether the nonroad engine should be permitted final entry under §89.605–96 or §89.609–96.

§89.607–96 Maintenance of independent commercial importer's records.

(a) The Independent Commercial Importer (ICI) subject to any of the provisions of this subpart must establish and maintain adequately organized and indexed records, correspondence and other applicable documents relating to the certification, modification, test, purchase, sale, storage, registration, and importation of that nonroad engine. The ICI must retain such records for 8 years from the date of final admission or exportation of a nonconforming nonroad engine imported by the ICI. These records include, but are not limited to:

(1) The declaration required by U.S. Bureau of Customs regulations.

(2) Any documents or other written information required by a federal government agency to be submitted or retained in conjunction with the certification, importation or emission testing (if applicable) of nonroad engines;

(3) All bills of sale, invoices, purchase agreements, purchase orders, principal or agent agreements, and correspondence between the ICI and the ultimate purchaser of each nonroad engine and between any agents of the above parties;

(4) For nonroad engines imported by an ICI pursuant to §89.605–96 or §89.609–96, documents providing parts identification data (including calibration changes and part numbers and location of such parts on each nonroad engine) associated with the emission control system installed on each nonroad engine demonstrating that such emission control system was properly installed on such nonroad engine;

(5) For nonroad engines imported by an ICI pursuant to §89.605–96 or §89.609–96, documents demonstrating that, where applicable, each nonroad engine was emission tested in accordance with subpart E of this part and part 86, subpart I of this chapter;

(6) Documents providing evidence that the requirements of §89.610–96 have been met;

(7) Documents providing evidence of compliance with all relevant requirements of the Clean Air Act;

(8) Documents providing evidence of the initiation of the 15 working day hold period (that is, evidence that the application submitted pursuant to §89.605–96(a) or §89.609–96(b) was received by EPA) for each nonroad engine imported pursuant to §89.605–96 or §89.609–96;

(9) For nonroad engines owned by the ICI at the time of importation, documents providing evidence of the date of sale and date of delivery to the ultimate purchaser, together with the name, address, and telephone number of the ultimate purchaser for each nonroad engine imported pursuant to §89.605–96 or §89.609–96;

(10) For nonroad engines not owned by the ICI at the time of importation, documents providing evidence and date of release to the owner (including owner's name, address, and telephone number) for each nonroad engine imported pursuant to §89.605–96 or §89.609–96;

(11) Documents providing evidence of the date of original manufacture of the nonroad engine. The importer may substitute an alternate date in lieu of the date of original manufacture, provided that the substitution of such alternate

date is approved in advance by the Administrator.

(b) The ICI is responsible for ensuring the maintenance of records required by this section, regardless of whether or not facilities used by the ICI to comply with requirements of this subpart are under the control of the ICI.

§ 89.608–96 "In Use" inspections and recall requirements.

(a) Nonroad engines which have been imported by an Independent Commercial Importer (ICI) pursuant to § 89.605–96 or § 89.609–96 and finally admitted by EPA may be inspected and emission tested by EPA for the recall period specified in § 89.104–96(b).

(b) ICIs must maintain for eight years, and provide to EPA upon request, a list of owners or ultimate purchasers of all nonroad engines imported by the ICI under this subpart.

(c) The Administrator must notify the ICI whenever the Administrator has determined that a substantial number of a class or category of the ICI's nonroad engines, although properly maintained and used, do not conform to the regulations prescribed under section 213 of the Act when in actual use throughout their useful lives. After such notification, the recall regulations at subpart H of this part govern the ICI's responsibilities. References to a manufacturer in the recall regulations apply to the ICI.

§ 89.609–96 Final admission of modification nonroad engines and test nonroad engines.

(a) A nonroad engine may be imported under this section by an Independent Commercial Importer (ICI) possessing a currently valid certificate of conformity only if:

(1) The nonroad engine is six original production years old or older; and

(2) The ICI's name has not been placed on a currently effective EPA list of ICIs ineligible to import such modification/test nonroad engines, as described in paragraph (e) of this section; and

(3) The ICI has a currently valid certificate of conformity for the same nonroad engine class and fuel type as the nonroad engine being imported.

(b) A nonroad engine conditionally imported under this section may be finally admitted into the United States upon approval of the ICI's application by the Administrator. The application is to be made by completing EPA forms, in accordance with EPA instructions. The ICI includes in the application:

(1) The identification information required in § 89.604–96;

(2) An attestation by the ICI that the nonroad engine has been modified and tested in accordance with the applicable emission tests as specified in Subpart B § 89.119–96(a) of this part at a laboratory within the United States;

(3) The results of all emission tests;

(4) The applicable deterioration factor assigned by EPA, if any;

(5) The emission test results adjusted by the applicable deterioration factor;

(6) All information required under § 89.610–96 related to maintenance, warranties, and labeling;

(7) An attestation by the ICI that the ICI is responsible for the nonroad engine's compliance with federal emission requirements, regardless of whether the ICI owns the nonroad engine imported under this section;

(8) The applicable address and telephone number of the ICI, or the name, address, and telephone number of the person who the ICI prefers to receive EPA notification under § 89.609–96(d);

(9) An attestation by the ICI that all requirements of § 89.607–95 and § 89.610–96 have been met; and

(10) Such other information as is deemed necessary by the Administrator.

(c) EPA approval for final admission of a nonroad engine under this section is presumed not to have been granted if any requirement of this subpart has not been met.

(d) Except as provided in paragraph (c) of this section, EPA approval for final admission of a nonroad engine under this section is presumed to have been granted if the ICI does not receive oral or written notice from EPA to the contrary within 15 working days of the date that the Manufacturers Operations Division of EPA receives the ICI's application under paragraph (b) of this section. Such EPA notice of non-approval may be made to any employee

of the ICI. It is the responsibility of the ICI to ensure that the Manufacturers Operations Division of EPA receives the application and to confirm the date of receipt. During this 15 working day hold period, the nonroad engine is stored at a location where the Administrator has reasonable access to the nonroad engine for the Administrator's inspection. The storage is to be within 50 miles of the ICI's testing facility to allow the Administrator reasonable access for inspection and/or testing. A storage facility not meeting this criterion must be approved in writing by the Administrator prior to the submittal of the ICI's application under paragraph (b) of this section.

(e) *EPA list of ICIs ineligible to import nonroad engines for modification/test.* EPA maintains a current list of ICIs who have been determined to be ineligible to import nonroad engines under this section. The determination of ineligibility is made in accordance with the criteria and procedures in §89.612–96(e) of this subpart.

(f) *Inspections.* Prior to final admission, a nonroad engine imported under this section is subject to special inspections as described in §89.606–96 with these additional provisions:

(1) If, in the judgment of the Administrator, a significant number of nonroad engines imported by an ICI fail to comply with emission requirements upon inspection or retest or if the ICI fails to comply with a provision of these regulations that pertain to nonroad engines imported pursuant to §89.609–96, the ICI may be placed on the EPA list of ICIs ineligible to import nonroad engines under this section as specified in paragraph (e) of this section and §89.612–96(e).

(2) An individual nonroad engine which fails a retest or inspection is to be repaired and retested, as applicable, to demonstrate compliance with emission requirements before final admission is granted by EPA.

(3) Unless otherwise specified by EPA, the ICI bears the costs of all retesting under this subsection, including transportation.

(g) *In-use inspection and testing.* A nonroad engine imported under this section may be tested or inspected by EPA at any time during the recall period specified in §89.104–96(b), in accordance with §89.608–96(a). If, in the judgment of the Administrator, a significant number of properly maintained and used nonroad engines imported by the ICI pursuant to this section fail to meet emission requirements, the name of the ICI may be placed on the EPA list of ICIs ineligible to import nonroad engines under the modification/test provision as specified in paragraph (e) of this section and §89.612–96(e).

§89.610–96 Maintenance instructions, warranties, emission labeling.

The provisions of this section are applicable to all nonroad engines imported under the provisions of §89.605–96 or §89.609–96.

(a) *Maintenance instructions.* (1) The Independent Commercial Importer (ICI) must furnish to the purchaser, or to the owner of each nonroad engine imported under §89.605–96 or §89.609–96 of this subpart, written instructions for the maintenance and use of the nonroad engine by the purchaser or owner. Each application for final admission of a nonroad engine is to provide an attestation that such instructions have been or will be (if the ultimate purchaser is unknown) furnished to the purchaser or owner of such nonroad engine at the time of sale or delivery. The ICI must maintain a record of having furnished such instructions.

(2) For each nonroad engine imported under §89.609–96, a copy of the maintenance and use instructions is to be maintained in a file containing the records for that nonroad engine.

(3) The maintenance and use instructions are not to contain requirements more restrictive than those set forth in §89.109–96 (Maintenance Instructions) and are to be in sufficient detail and clarity that a mechanic of average training and ability can maintain or repair the nonroad engine.

(4) For each nonroad engine imported pursuant to §89.605–96 or §89.609–96, ICIs must furnish with each nonroad engine a list of the emission control parts, emission-related parts added by the ICI, and the emission control and emission-related parts furnished by the Original Engine Manufacturer (OEM).

(5) The information required in this section to be furnished to the ultimate purchaser or owner is to be copied and maintained in a file containing the records for that nonroad engine prior to submitting each application for final admission pursuant to § 89.605–96(a) or § 89.609–96(b).

(b) *Warranties.* (1) ICIs must submit to the Manufacturers Operations Division of EPA sample copies (including revisions) of any warranty documents required by this section prior to importing nonroad engines under this subpart.

(2) ICIs must provide to nonroad engine owners emission warranties identical to those required by sections 207(a) of the Act. The warranty period for each nonroad engine is to commence on the date the nonroad engine is delivered by the ICI to the ultimate purchaser or owner.

(3) ICIs must provide warranty insurance coverage by a prepaid mandatory service insurance policy underwritten by an independent insurance company. The policy is to:

(i) Be subject to the approval of the Administrator if the insurance coverage is less than the required warranty;

(ii) At a minimum, provide coverage for emission-related components installed or modified by the ICI and, to the maximum extent possible, the emission-related components installed by the OEM;

(iii) Be transferable to each successive owner for the periods specified in § 89.104–96(c); and

(iv) Provide that in the absence of an ICI's facility being reasonably available (that is, within 50 miles) for performance of warranty repairs, the warranty repairs may be performed anywhere.

(4) ICIs must attest in each application for final admission that the warranty requirements have been met, that the mandatory insurance has been paid and is in effect, and that certificates and statements of the warranties have been or will be provided to the owner or ultimate purchaser. A copy of the warranties and evidence that the warranties are paid and in effect is to be maintained in a file containing the records for each nonroad engine prior to submitting each application for final admission pursuant to § 89.605–96(a) or § 89.609–96(b).

(c) *Emission labeling.* (1) For each nonroad engine imported pursuant to § 89.605–96 or § 89.609–96, the ICI must affix a permanent legible label which identifies each nonroad engine and also satisfies the following:

(i) The label meets all the requirements of § 89.110–96 and contains the following statement ''This nonroad engine was originally produced in (month and year of original production). It has been imported and modified by (ICI's name, address, and telephone number) to conform to United States emission regulations applicable to the (year) model year.''

(ii) If the nonroad engine is owned by the ICI at the time of importation, the label also states ''This nonroad engine is warranted for five years or 3000 hours of operation from the date of purchase, whichever first occurs.''

(iii) If the nonroad engine is not owned by the ICI at the time of importation, the label states ''This nonroad engine is warranted for five years or 3000 hours of operation from the date of release to the owner, whichever first occurs.''

(iv) For nonroad engines imported under § 89.609–96, the label clearly states in bold letters that ''This nonroad engine has not been manufactured under a certificate of conformity but conforms to United States emission regulations under a modification/test program.'' For all nonroad engines imported pursuant to § 89.605–96 or § 89.609–96, the label contains the vacuum hose routing diagram applicable to the nonroad engines.

(2) As part of the application to the Administrator for final admission of each individual nonroad engine under § 89.609–96, the ICI must maintain a copy of the labels for each nonroad engine in a file containing the records for that nonroad engine prior to submitting each application for final admission. ICIs importing under § 89.605–96 or § 89.609–96 must attest to compliance with the preceding labeling requirements of this section in each application for final admission.

§89.611–96 Exemptions and exclusions.

(a) Individuals, as well as ICIs, are eligible for importing nonroad engines into the United States under the provisions of this section, unless otherwise specified.

(b) Notwithstanding other requirements of this subpart, a nonroad engine entitled to one of the temporary exemptions of this paragraph may be conditionally admitted into the United States if prior written approval for the conditional admission is obtained from the Administrator. Conditional admission is to be under bond. The Administrator may request that the U.S. Customs Service require a specific bond amount to ensure compliance with the requirements of the Act and this subpart. A written request for approval from the Administrator is to contain the identification required in §89.604–96(a) (except for §89.604–96(a)(5)) and information that demonstrates that the importer is entitled to the exemption. Noncompliance with provisions of this section may result in the forfeiture of the total amount of the bond or exportation of the nonroad engine. The following temporary exemptions are permitted by this paragraph:

(1) *Exemption for repairs or alterations.* Upon written approval by EPA, an owner of nonroad engines may conditionally import under bond such nonroad engines solely for purpose of repair(s) or alteration(s). The nonroad engines may not be operated in the United States other than for the sole purpose of repair or alteration. They may not be sold or leased in the United States and are to be exported upon completion of the repair(s) or alteration(s).

(2) *Testing exemption.* A test nonroad engine may be conditionally imported by a person subject to the requirements of §89.905. A test nonroad engine may be operated in the United States provided that the operation is an integral part of the test. This exemption is limited to a period not exceeding one year from the date of importation unless a request is made by the appropriate importer concerning the nonroad engine in accordance with §89.905(f) for a subsequent one-year period.

(3) *Precertification exemption.* A prototype nonroad engine for use in applying to EPA for certification pursuant to this subpart may be conditionally imported subject to applicable provisions of §89.906 and the following requirements:

(i) No more than one prototype nonroad engine for each engine family for which an importer is seeking certification is to be imported.

(ii) The granting of precertification exemptions by the Administrator is discretionary. Normally, no more than three outstanding precertification exemptions are allowed for each importer. No precertification exemption is allowed if the importer requesting the exemption is in noncompliance with any requirement of this subpart until the noncompliance is corrected.

(iii) Unless a certificate of conformity is issued for the prototype nonroad engine and the nonroad engine is finally admitted pursuant to the requirements of §89.605 within 180 days from the date of entry, the total amount of the bond is to be forfeited or the nonroad engine exported unless an extension is granted by the Administrator. A request for an extension is to be in writing and received by the Administrator prior to the date that the precertification exemption expires.

(iv) Such precertification nonroad engine may not be operated in the United States other than for the sole purpose of the precertification exemption.

(4) *Display exemptions.* (i) A nonroad engine intended solely for display may be conditionally imported subject to the requirements of §89.907.

(ii) A display nonroad engine may be imported by any person for purposes related to a business or the public interest. Such purposes do not include collections normally inaccessible or unavailable to the public on a daily basis, display of a nonroad engine at a dealership, private use, or other purpose that the Administrator determines is not appropriate for display exemptions. A display nonroad engine may not be sold in the United States and may not be operated in the United States except for the operation incident and necessary to the display purpose.

(iii) A temporary display exemption is granted for 12 months or for the duration of the display purpose, whichever is shorter. Two extensions of up to 12 months each are available upon approval by the Administrator. In no circumstances, however, may the total period of exemption exceed 36 months. The U.S. Customs Service bonds a temporary display exemption.

(c) Notwithstanding any other requirement of this subpart, a nonroad engine may be finally admitted into the United States under this paragraph if prior written approval for such final admission is obtained from the Administrator. Conditional admission of these nonroad engines under this subpart is not permitted for the purpose of obtaining such written approval from the Administrator. A request for approval is to contain the identification information required in § 89.604–96(a) (except for § 89.604–96(a)(5)) and information that demonstrates that the importer is entitled to the exemption or exclusion. The following exemptions or exclusions are permitted by this paragraph:

(1) *National security exemption*. A nonroad engine may be imported under the national security exemption found at § 89.908.

(2) *Hardship exemption*. The Administrator may exempt on a case-by-case basis a nonroad engine from federal emission requirements to accommodate unforeseen cases of extreme hardship or extraordinary circumstances.

(3) *Exemption for nonroad engines identical to United States certified versions.*

(i) A person (including businesses) is eligible for importing a nonroad engine into the United States under the provisions of this paragraph. An exemption will be granted if the nonroad engine:

(A) is owned by the importer;

(B) is not offered for importation for the purpose of resale; and

(C) is proven to be identical, in all material respects, to a nonroad engine certified by the Original Engine Manufacturer (OEM) for sale in the United States or is proven to have been modified to be identical, in all material respects, to a nonroad engine certified by the OEM for sale in the United States according to complete written instructions provided by the OEM's United States representative, or his/her designee.

(ii) *Proof of conformity*. (A) Documentation submitted pursuant to this section for the purpose of proving conformity of individual nonroad engines is to contain sufficiently organized data or evidence demonstrating that the nonroad engine identified pursuant to § 89.604–96(a) is identical, in all material respects, to a nonroad engine identified in an OEM's application for certification.

(B) If the documentation does not contain all the information required by this part, or is not sufficiently organized, EPA notifies the importer of any areas of inadequacy, and that the documentation does not receive further consideration until the required information or organization is provided.

(C) If EPA determines that the documentation does not clearly or sufficiently demonstrate that a nonroad engine is eligible for importation, EPA notifies the importer in writing.

(D) If EPA determines that the documentation clearly and sufficiently demonstrates that a nonroad engine is eligible for importation, EPA grants approval for importation and notifies the importer in writing. Notwithstanding any other requirement of this subpart, the notice constitutes approval for final admission into the United States.

(d) Foreign diplomatic and military personnel may import a nonconforming nonroad engine without bond. At the time of admission, the importer must submit to the Administrator the written report required in § 89.604–96(a) (except for information required by § 89.604–96(a)(5)) and a statement from the U.S. Department of State confirming qualification for this exemption. The nonroad engine may not be sold in the United States and must be exported if the individual's diplomatic status is no longer applicable, as determined by the Department of State, unless subsequently brought into conformity in accordance with §§ 89.605–96, 89.609–96, or 89.611–96(c)(3).

(e) *Competition exclusion*. A nonconforming engine may be imported by any person provided the importer demonstrates to the Administrator that the engine is used to propel a vehicle

used solely for competition and obtains prior written approval from the Administrator. A nonconforming engine imported pursuant to this paragraph may not be operated in the United States except for that operation incident and necessary for the competition purpose, unless subsequently brought into conformity with United States emission requirements in accordance with §§89.605–96, 89.609–96, or 89.611–96(c)(3).

(f) *Exclusions/exemptions based on date of original manufacture.* (1) Notwithstanding any other requirements of this subpart, the following nonroad engines are excluded, as determined by the engine's gross power output, from the requirements of the Act in accordance with section 213 of the Act and may be imported by any person:

(i) All nonroad engines greater than or equal to 37 kW but less than 75 kW originally manufactured prior to January 1, 1998.

(ii) All nonroad engines greater than or equal to 75 kW but less than 130 kW originally manufactured prior to January 1, 1997.

(iii) All nonroad engines greater than or equal to 130 kW but less than or equal to 560 kW originally manufactured prior to January 1, 1996.

(iv) All nonroad engines greater than 560 kW originally manufactured prior to January 1, 2000.

(2) Notwithstanding other requirements of this subpart, a nonroad engine not subject to an exclusion under §89.611–96(f)(1) but greater than 20 original production (OP) years old is entitled to an exemption from the requirements of the Act, provided that it has not been modified in those 20 OP years and it is imported into the United States by an ICI. At the time of admission, the ICI must submit to the Administrator the written report required in §89.604–96(a) (except for information required by §89.604–96(a)(5)).

(g) An application for exemption and exclusion provided for in paragraphs (b), (c), and (e) of this section is to be mailed to: U.S. Environmental Protection Agency, Office of Mobile Sources, Manufacturers Operations Division (6405–J), 401 M Street, SW, Washington, DC 20460, Attention: Imports.

§89.612–96 Prohibited acts; penalties.

(a) The importation of a nonroad engine, including a nonroad engine incorporated into a nonroad vehicle or nonroad equipment, which is not covered by a certificate of conformity other than in accordance with this subpart and the entry regulations of the U.S. Customs Service is prohibited. Failure to comply with this section is a violation of section 213(d) and section 203 of the Act.

(b) Unless otherwise permitted by this subpart, during a period of conditional admission, the importer of a nonroad engine may not:

(1) Register, license, or operate the nonroad engine in the United States;

(2) Sell or offer the nonroad engine for sale;

(3) Store the nonroad engine on the premises of a dealer (unless approved by the Administrator), owner, or purchaser;

(4) Relinquish control of the nonroad engine to the owner or purchaser; or

(5) Cause a nonroad engine to be altered in any manner subsequent to modification and testing, if applicable, for which an application for final admission is based and submitted to the Administrator, unless approved in advance by the Administrator.

(c) A nonroad engine conditionally admitted pursuant to §89.604–96 and not granted final admission within 120 days of such conditional admission, or within such additional time as the Administrator and the U.S. Customs Service may allow, is deemed to be unlawfully imported into the United States in violation of section 213(d) and section 203 of the Act, unless the nonroad engine has been delivered to the U.S. Customs Service for export or other disposition under applicable Customs laws and regulations. A nonroad engine not so delivered is subject to seizure by the U.S. Customs Service.

(d) An importer who violates section 213(d) and section 203 of the Act is subject to the provisions of section 209 of the Act and is also subject to a civil penalty under section 205 of the Act of not more than $25,000 for each nonroad engine subject to the violation. In addition to the penalty provided in the Act, where applicable, a person or entity

who imports an engine under the exemption provisions of § 89.611–96(b) and, who fails to deliver the nonroad engine to the U.S. Customs Service is liable for liquidated damages in the amount of the bond required by applicable Customs laws and regulations.

(e)(1) An ICI whose nonroad engines imported under § 89.605–96 or § 89.609–96 fail to conform to federal emission requirements after modification and/or testing or who fails to comply with applicable provisions of this subpart, may, in addition to any other applicable sanctions and penalties, be subject to any, or all, of the following sanctions:

(i) The ICI's currently held certificates of conformity may be revoked or suspended;

(ii) The ICI may be deemed ineligible to apply for new certificates of conformity for up to three years; and

(iii) The ICI may be deemed ineligible to import nonroad engines under § 89.609–96 in the future and be placed on a list of ICIs ineligible to import nonroad engines under the provisions of § 89.609–96.

(2) Grounds for the actions described in paragraph (e)(1) of this section include, but are not limited to, the following:

(i) Action or inaction by the ICI or the laboratory performing the emission test on behalf of the ICI, which results in fraudulent, deceitful, or grossly inaccurate representation of any fact or condition which affects a nonroad engine's eligibility for admission to the United States under this subpart;

(ii) Failure of a significant number of imported nonroad engines to comply with federal emission requirements upon EPA inspection or retest; or

(iii) Failure by an ICI to comply with requirements of this subpart.

(3) The following procedures govern any decision to suspend, revoke, or refuse to issue certificates of conformity under this subpart:

(i) When grounds appear to exist for the actions described in paragraph (e)(1) of this section, the Administrator must notify the ICI in writing of any intended suspension or revocation of a certificate of conformity, proposed ineligibility to apply for new certificates of conformity, or intended suspension of eligibility to conduct modification/testing under § 89.609–96, and the grounds for such action.

(ii) Except as provided by paragraph (e)(3)(iv), the ICI must take the following actions before the Administrator will consider withdrawing notice of intent to suspend or revoke the ICI's certificate of conformity or to deem the ICI ineligible to apply for new certification or to deem the ICI ineligible to perform modification/testing under § 89.609–96:

(A) Submit a written report to the Administrator which identifies the reason for the noncompliance of the nonroad engine, describes the proposed remedy, including a description of any proposed quality control and/or quality assurance measures to be taken by the ICI to prevent the future occurrence of the problem, and states the date on which the remedies are to be implemented or

(B) Demonstrate that the nonroad engine does in fact comply with applicable regulations in this chapter by retesting, if applicable, the nonroad engine in accordance with the applicable emission test specified in subpart E of this part.

(iii) An ICI may request, within 15 calendar days of the Administrator's notice of intent to suspend or revoke the ICI's certificate of conformity or to deem the ICI ineligible to apply for new certificates or to deem the ICI ineligible to perform modification/testing under § 89.609- 96, that the Administrator grant such ICI a hearing:

(A) As to whether the tests, if applicable, have been properly conducted,

(B) As to any substantial factual issue raised by the Administrator's proposed action.

(iv) If, after the Administrator notifies an ICI of the intent to suspend or revoke the ICI's certificate of conformity or to deem the ICI ineligible to apply for new certificates or to deem the ICI ineligible to perform modification/testing under § 89.609–96 and prior to any final suspension or revocation, the ICI demonstrates to the Administrator's satisfaction that the decision to initiate suspension or revocation of the certificate of conformity or eligibility to perform modification/testing under § 89.609–96 was based on erroneous

information, the Administrator will withdraw the notice of intent.

(4) Hearings on suspensions and revocations of certificates of conformity or of eligibility to apply for new certificates or of eligibility to perform modification/testing under §89.609–96 will be held in accordance with the following:

(i) The procedures prescribed by this section will apply whenever an ICI requests a hearing pursuant to paragraph (e)(3)(iii) of this section.

(ii) Hearings under paragraph (e)(3)(iii) will be held in accordance with the procedures outlined in §86.614 of this chapter, where applicable, provided that where §86.612 is referred to in §86.614: §86.612(a) is replaced by §89.612–96(e)(2); and §86.612(i) is replaced by §89.612–96(e)(3)(iii).

(5) When a hearing is requested under this section and it clearly appears from the data or other information contained in the request for a hearing, or submitted at the hearing, that no genuine and substantial question of fact exists with respect to the issue of whether the ICI failed to comply with this subpart, the Administrator will enter an order denying the request for a hearing, or terminating the hearing, and suspending or revoking the certificate of conformity and/or deeming the ICI ineligible to apply for new certificates or to perform modification/testing under §89.609–96.

(6) In lieu of requesting a hearing under paragraph (e)(3)(iii) of this section, an ICI may respond in writing to EPA's charges in the notice of intent to suspend or revoke. An ICI's written response must be received by EPA within 30 days of the date of EPA's notice of intent. No final decision to suspend or revoke will be made before that time.

§89.613–96 Treatment of confidential information.

The provisions for treatment of confidential information as described in §89.7 apply.

Subpart H—Recall Regulations

§89.701 Applicability.

The requirements of subpart H are applicable to all nonroad engines subject to the provisions of subpart A of part 89.

§89.702 Definitions.

The definitions in subpart A of this part apply to this subpart.

§89.703 Applicability of part 85, subpart S.

(a) Nonroad engines subject to provisions of subpart B of this part are subject to recall regulations specified in part 85, subpart S of this title, except for the items set forth in this section.

(b) Reference to section 214 of the Clean Air Act in §85.1801 is replaced by reference to section 216 of the Clean Air Act.

(c) Reference to section 202 of the Act in §85.1802(a) is replaced by reference to section 213 of the Act.

(d) Reference to ''family particulate emission limits as defined in Part 86 promulgated under section 202 of the Act'' in §85.1803(a) and §85.1805(a)(1) is replaced by reference to family emission limits as defined in part 89 promulgated under section 213 of the Act.

(e) Reference to ''vehicles or engines'' throughout the subpart is replaced by reference to ''engines.''

Subpart I—Emission Defect Reporting Requirements

§89.801 Applicability.

The requirements of subpart I are applicable to all nonroad engines subject to the provisions of subpart A of part 89. The requirement to report emission-related defects affecting a given class or category of engines remains applicable for five years from the end of the model year in which such engines were manufactured.

§89.802 Definitions.

The definitions in subpart A of this part apply to this subpart.

§89.803 Applicability of part 85, subpart T.

(a) Nonroad engines subject to provisions of subpart B of this part are subject to emission defect reporting requirements specified in part 85, subpart T of this chapter, except for the items set forth in this section.

(b) Section 85.1901 is replaced by § 89.801.

(c) Reference to the Clean Air Act, 42 U.S.C. 1857 in § 85.1902(a) is replaced by reference to the Clean Air Act, 42 U.S.C. 7401.

(d) Reference to the ''approved Application for Certification required by 40 CFR 86.077–22 and like provisions of Part 85 and Part 86 of Title 40 of the Code of Federal Regulations'' in § 85.1902(b) is replaced by reference to the approved application for certification required by § 89.115–96 and like provisions of part 89 of this chapter.

(e) Reference to section 202(d) of the Act in § 85.1902(c) is replaced by reference to section 202(d) and section 213 of the Act.

(f) Reference to section 214 of the Act in § 85.1902 (e) and (f) is replaced by reference to section 216 of the Act.

(g) Reference to ''vehicles or engines'' throughout the subpart is replaced by reference to ''engines.''

Subpart J—Exemption Provisions

§ 89.901 Applicability.

The requirements of subpart J are applicable to all nonroad engines subject to the provisions of subpart A of part 89.

§ 89.902 Definitions.

The definitions in subpart A of this part apply to this subpart. The following definitions also apply to this subpart.

Exemption means exemption from the prohibitions of § 89.1006.

Export exemption means an exemption granted under § 89.1004(b) for the purpose of exporting new nonroad engines.

National security exemption means an exemption which may be granted under § 89.1004(b) for the purpose of national security.

Manufacturer-owned nonroad engine means an uncertified nonroad engine owned and controlled by a nonroad engine manufacturer and used in a manner not involving lease or sale by itself or in a vehicle or piece of equipment employed from year to year in the ordinary course of business for product development, production method assessment, and market promotion purposes.

Testing exemption means an exemption which may be granted under § 89.1004(b) for the purpose of research investigations, studies, demonstrations or training, but not including national security.

§ 89.903 Application of section 216(10) of the Act.

(a) For the purpose of determining the applicability of section 216(10) of the Act, an internal combustion engine (including the fuel system) that is not used in a motor vehicle is deemed a nonroad engine if it meets the definition in subpart A of this part.

(b) EPA will maintain a list of nonroad engines that have been determined to be excluded because they are used solely for competition. This list will be available to the public and may be obtained by writing to the following address: Chief, Selective Enforcement Auditing Section, Manufacturers Operations Division (6405–J), Environmental Protection Agency, 401 M Street SW, Washington, DC 20460.

(c) Upon written request, EPA will make written determinations as to whether certain engines are or are not nonroad engines. Engines that are determined not to be nonroad engines are excluded from regulations under this part.

§ 89.904 Who may request an exemption.

(a) Any person may request a testing exemption under § 89.905.

(b) Any nonroad engine manufacturer may request a national security exemption under § 89.908.

(c) For nonroad engine manufacturers, nonroad engines manufactured for export purposes are exempt without application, subject to the provisions of § 89.909.

(d) For eligible manufacturers, as determined by § 89.906, manufacturer-owned nonroad engines are exempt without application, subject to the provisions of § 89.906.

(e) For any person, display nonroad engines are exempt without application, subject to the provisions of § 89.907.

§89.905 Testing exemption.

(a) Any person requesting a testing exemption must demonstrate the following:

(1) That the proposed test program has a purpose which constitutes an appropriate basis for an exemption in accordance with this section;

(2) That the proposed test program necessitates the granting of an exemption;

(3) That the proposed test program exhibits reasonableness in scope; and

(4) That the proposed test program exhibits a degree of control consonant with the purpose of the test program and EPA's monitoring requirements.

(5) Paragraphs (b), (c), (d), and (e) of this section describe what constitutes a sufficient demonstration for each of the four identified elements.

(b) With respect to the purpose of the proposed test program, an appropriate purpose would be research, investigations, studies, demonstrations, or training, but not national security. A concise statement of purpose is a required item of information.

(c) With respect to the necessity that an exemption be granted, necessity arises from an inability to achieve the stated purpose in a practicable manner without performing or causing to be performed one or more of the prohibited acts under §89.1003. In appropriate circumstances, time constraints may be a sufficient basis for necessity, but the cost of certification alone, in the absence of extraordinary circumstances, is not a basis for necessity.

(d) With respect to reasonableness, a test program must exhibit a duration of reasonable length and affect a reasonable number of engines. In this regard, required items of information include:

(1) An estimate of the program's duration, and

(2) The maximum number of nonroad engines involved.

(e) With respect to control, the test program must incorporate procedures consistent with the purpose of the test and be capable of affording EPA monitoring capability. As a minimum, required items of information include:

(1) The technical nature of the test;

(2) The site of the test;

(3) The time or mileage duration of the test;

(4) The ownership arrangement with regard to the engines involved in the test;

(5) The intended final disposition of the engines;

(6) The manner in which the engine identification numbers will be identified, recorded, and made available; and

(7) The means or procedure whereby test results will be recorded.

(f) A manufacturer of new nonroad engines may request a testing exemption to cover nonroad engines intended for use in test programs planned or anticipated over the course of a subsequent one-year period. Unless otherwise required by the Director, Manufacturers Operations Division, a manufacturer requesting such an exemption need only furnish the information required by paragraphs (a)(1) and (d)(2) of this section along with a description of the record-keeping and control procedures that will be employed to assure that the engines are used for purposes consistent with paragraph (a) of this section.

§89.906 Manufacturer-owned exemption and precertification exemption.

(a) Except as provided in paragraph (b) of this section, any manufacturer-owned nonroad engine, as defined by §89.902, is exempt from §89.1003, without application, if the manufacturer complies with the following terms and conditions:

(1) The manufacturer must establish, maintain, and retain the following adequately organized and indexed information on each exempted engine:

(i) Engine identification number,

(ii) Use of the engine on exempt status and

(iii) Final disposition of any engine removed from exempt status; and

(2) The manufacturer must provide right of entry and access to these records to EPA authorized representatives as outlined in §89.506–96.

(3) Unless the requirement is waived or an alternate procedure is approved by the Director, Manufacturers Operations Division, the manufacturer must permanently affix a label to each

nonroad engine on exempt status. This label should

(i) Be affixed in a readily visible portion of the engine,

(ii) Be attached in such a manner that cannot be removed without destruction or defacement,

(iii) State in the English language and in block letters and numerals of a color that contrasts with the background of the label, the following information:

(A) The label heading ''Emission Control Information;''

(B) Full corporate name and trademark of manufacturer;

(C) Engine displacement, engine family identification, and model year of engine; or person of office to be contacted for further information about the engine;

(D) The statement ''This nonroad engine is exempt from the prohibitions of 40 CFR section 90.1003.''

(4) No provision of paragraph (a)(3) of this section prevents a manufacturer from including any other information it desires on the label.

(b) Any independent commercial importer that desires a precertification exemption pursuant to § 89.611(b)(3) and is in the business of importing, modifying, or testing uncertified nonroad engines for resale under the provisions of § 89.611 et seq., must apply to the Director, Manufacturers Operations Division. The Director may require such independent commercial importer to submit information regarding the general nature of the fleet activities, the number of nonroad engines involved, and a demonstration that adequate record-keeping procedures for control purposes will be employed.

§ 89.907 Display exemption.

Where an uncertified nonroad engine is a display engine to be used solely for display purposes, will only be operated incident and necessary to the display purpose, and will not be sold unless an applicable certificate of conformity has been received or the engine has been finally admitted pursuant to subpart G of this part, no request for exemption of the engine is necessary.

§ 89.908 National security exemption.

(a)(1) Any nonroad engine, otherwise subject to this part, which is used in a vehicle that exhibits substantial features ordinarily associated with military combat such as armor and/or permanently affixed weaponry and which will be owned and/or used by an agency of the federal government with responsibility for national defense, will be considered exempt from these regulations for purposes of national security. No request for exemption is necessary.

(2) Manufacturers may request a national security exemption for any nonroad engine, otherwise subject to this part, which does not meet the conditions described in paragraph (a)(1) of this section. A manufacturer requesting a national security exemption must state the purpose for which the exemption is required and the request must be endorsed by an agency of the federal government charged with responsibility for national defense.

(b) EPA will maintain a list of models of nonroad engines (and the vehicles which use them) that have been granted a national security exemption under paragraph (a)(2) of this section. This list will be available to the public and may be obtained by writing to the following address: Group Manager, Engine Compliance Programs Group, Engine Programs and Compliance Division (6403J) Environmental Protection Agency, 401 M Street SW., Washington, DC 20460.

[61 FR 52102, Oct. 4, 1996]

§ 89.909 Export exemptions.

(a) A new nonroad engine intended solely for export, and so labeled or tagged on the outside of the container and on the engine itself, is subject to the provisions of § 89.1003, unless the importing country has new nonroad engine emission standards which differ from EPA standards.

(b) For the purpose of paragraph (a) of this section, a country having no standards, whatsoever, is deemed to be a country having emission standards which differ from EPA standards.

(c) EPA will maintain a list of foreign countries that have in force nonroad emission standards identical to EPA standards and have so notified

EPA. This list may be obtained by writing to the following address: Chief, Selective Enforcement Auditing Section, Manufacturers Operations Division (6405–J), Environmental Protection Agency, 401 M Street, SW., Washington, DC 20460. New nonroad engines exported to such countries must comply with EPA certification regulations.

(d) It is a condition of any exemption for the purpose of export under paragraph (a) of this section, that such exemption is void ab initio with respect to a new nonroad engine intended solely for export, where such nonroad engine is sold, or offered for sale, to an ultimate purchaser or otherwise distributed or introduced into commerce in the United States for purposes other than export.

§ 89.910 Granting of exemptions.

(a) If upon completion of the review of an exemption request made pursuant to § 89.905 or § 89.908, EPA determines it is appropriate to grant such an exemption, a memorandum of exemption is to be prepared and submitted to the person requesting the exemption. The memorandum is to set forth the basis for the exemption, its scope, and such terms and conditions as are deemed necessary. Such terms and conditions generally include, but are not limited to, agreements by the applicant to conduct the exempt activity in the manner described to EPA, create and maintain adequate records accessible to EPA at reasonable times, employ labels for the exempt engines setting forth the nature of the exemption, take appropriate measures to assure that the terms of the exemption are met, and advise EPA of the termination of the activity and the ultimate disposition of the engines.

(b) Any exemption granted pursuant to paragraph (a) of this section is deemed to cover any subject engine only to the extent that the specified terms and conditions are complied with. A breach of any term or condition causes the exemption to be void ab initio with respect to any engine. Consequently, the causing or the performing of an act prohibited under § 89.1003(a)(1) or (a)(3), other than in strict conformity with all terms and conditions of this exemption, renders the person to whom the exemption is granted, and any other person to whom the provisions of § 89.1003(a) are applicable, liable to suit under sections 204 and 205 of the Act.

§ 89.911 Submission of exemption requests.

Requests for exemption or further information concerning exemptions and/or the exemption request review procedure should be addressed to: Chief, Selective Enforcement Auditing Section, Manufacturers Operations Division (6405–J), Environmental Protection Agency, 401 M Street SW, Washington, DC 20460.

§ 89.912 Treatment of confidential information.

The provisions for treatment of confidential information as described in § 89.7 apply.

Subpart K—General Enforcement Provisions and Prohibited Acts

§ 89.1001 Applicability.

The requirements of subpart K are applicable to all nonroad engines subject to the provisions of subpart A of part 89, and to all nonroad vehicles and equipment that contain such nonroad engines.

§ 89.1002 Definitions.

The definitions in subpart A of this part apply to this subpart.

§ 89.1003 Prohibited acts.

(a) The following acts and the causing thereof are prohibited:

(1)(i) In the case of a manufacturer of new nonroad engines, vehicles, or equipment for distribution in commerce, the sale, or the offering for sale, or the introduction, or delivery for introduction, into commerce, of any new nonroad engine manufactured after the applicable effective date under this part, or any nonroad vehicle or equipment containing such engine, unless such engine is covered by a certificate of conformity issued (and in effect) under regulations found in this part.

(ii) In the case of any person, except as provided in subpart G of this part, the importation into the United States

of any new nonroad engine manufactured after the applicable effective date under this part, or any nonroad vehicle or equipment containing such engine, unless such engine is covered by a certificate of conformity issued (and in effect) under regulations found in this part.

(2)(i) For a person to fail or refuse to permit access to or copying of records or to fail to make reports or provide information required under § 89.1004.

(ii) For a person to fail or refuse to permit entry, testing, or inspection authorized under §§ 89.129–96, 89.506–96 or 89.1004.

(iii) For a person to fail or refuse to perform tests, or to have tests performed as required under §§ 89.119–96 or 89.1004.

(iv) For a person to fail to establish or maintain records as required under § 89.1004.

(3)(i) For a person to remove or render inoperative a device or element of design installed on or in a nonroad engine, vehicle or equipment in compliance with regulations under this part prior to its sale and delivery to the ultimate purchaser, or for a person knowingly to remove or render inoperative such a device or element of design after the sale and delivery to the ultimate purchaser; or

(ii) For a person to manufacture, sell or offer to sell, or install, a part or component intended for use with, or as part of, a nonroad engine, vehicle or equipment, where a principal effect of the part or component is to bypass, defeat, or render inoperative a device or element of design installed on or in a nonroad engine in compliance with regulations issued under this part, and where the person knows or should know that the part or component is being offered for sale or installed for this use or put to such use.

(4) For a manufacturer of a new nonroad engine subject to standards prescribed under this part:

(i) To sell, offer for sale, or introduce or deliver into commerce, a nonroad engine unless the manufacturer has complied with the requirements of § 89.1007.

(ii) To sell, offer for sale, or introduce or deliver into commerce, a nonroad engine unless a label or tag is affixed to the engine in accordance with § 89.110–96.

(iii) To fail or refuse to comply with the requirements of § 89.1008.

(iv) Except as provided in § 89.109–96, to provide directly or indirectly in any communication to the ultimate purchaser or a subsequent purchaser that the coverage of a warranty under the Act is conditioned upon use of a part, component, or system manufactured by the manufacturer or a person acting for the manufacturer or under its control, or conditioned upon service performed by such persons.

(v) To fail or refuse to comply with the terms and conditions of the warranty under § 89.1007.

(5) For a person to circumvent or attempt to circumvent the residence time requirements of subsection (b)(2)(iii) of the nonroad engine definition in § 89.2.

(6) For a manufacturer of nonroad vehicles or equipment to distribute in commerce, sell, offer for sale, or introduce into commerce a nonroad vehicle or piece of equipment, manufactured on or after the implementation date applicable to engines in such vehicle or equipment under § 89.102–96(a), which contains an engine not covered by a certificate of conformity.

(b) For the purposes of enforcement of this part, the following apply:

(1) Nothing in paragraph (a)(3) of this section is to be construed to require the use of manufacturer parts in maintaining or repairing a nonroad engine.

(2) Actions for the purpose of repair or replacement of a device or element of design or any other item are not considered prohibited acts under § 89.1003(a) if the action is a necessary and temporary procedure, the device or element is replaced upon completion of the procedure, and the action results in the proper functioning of the device or element of design.

(3) Actions for the purpose of a conversion of a nonroad engine for use of a clean alternative fuel (as defined in Title II of the Act) are not considered prohibited acts under § 89.1003(a) if:

(i) the vehicle complies with the applicable standard when operating on the alternative fuel, and the device or element is replaced upon completion of the conversion procedure, and

(ii) in the case of engines converted to dual fuel or flexible use, the action results in proper functioning of the device or element when the nonroad engine operates on conventional fuel.

(4) Certified nonroad engines shall be used in all vehicles and equipment manufactured on or after the applicable dates in § 89.102–96(a) that are self-propelled, portable, transportable, or are intended to be propelled while performing their function unless the manufacturer of the vehicle or equipment can prove that the vehicle or equipment will be used in a manner consistent with paragraph (2) of the definition of nonroad engine in § 89.2. Nonroad vehicle and equipment manufacturers may continue to use noncertified nonroad engines built prior to the effective date until noncertified engine inventories are depleted; however, stockpiling of noncertified nonroad engines will be considered a violation of this section.

(5) A manufacturer of nonroad vehicles may install an engine certified to the motor vehicle requirements of 40 CFR part 86 in a nonroad vehicle or equipment where:

(i) The subject nonroad vehicle or equipment is designed for travel on public streets and highways to get from one job site to another; and

(ii) The engine serves to propel the vehicle or equipment when it is operated on public roads; and

(iii) There is no adjustment outside of the manufacturer's specifications or removal or rendering inoperative of devices or elements of design installed on or in the engine by the original engine manufacturer for purposes of emission control or any other action that may be considered tampering under section 203 of the Clean Air Act or paragraph (a)(3) of this section; and

(iv) A certified nonroad engine is not available with appropriate physical or performance characteristics; or

(v) A state requires the use of an on-highway engine pursuant to a waiver granted by EPA under section 209(e) of the Clean Air Act.

(6) A manufacturer that produces nonroad vehicles or equipment by performing modifications to complete or incomplete motor vehicles may retain the motor vehicle engine in such vehicle or equipment provided that:

(i) The engine is certified to the motor vehicle requirements of 40 CFR part 86; and

(ii) The on-highway vehicle is not available from its manufacturer with a certified nonroad engine having appropriate performance characteristics; and

(iii) There is no adjustment outside of the manufacturer's specifications or removal or rendering inoperative of devices or elements of design installed on or in the engine or vehicle by the original engine or vehicle manufacturer for purposes of emission control, or any other action that may be considered tampering under section 203 of the Clean Air Act or paragraph (a)(3) of this section.

(7) A new nonroad engine, intended solely to replace an engine in a piece of nonroad equipment manufactured prior to the applicable implementation date in § 89.102–96(a), shall not be subject to the prohibitions of paragraph (a)(1) of this section or the requirements of § 89.105–96 and paragraph (b)(4) of this section provided that:

(i) The engine manufacturer has ascertained that no engine produced by itself or the manufacturer of the engine that is being replaced, if different, and certified to the requirements of this subpart, is available with the appropriate physical or performance characteristics to repower the equipment; and

(ii) The engine manufacturer or its agent takes ownership and possession of the old engine in partial exchange for the replacement engine; and

(iii) The replacement engine is clearly labeled with the following language, or similar alternate language approved by the Administrator: THIS ENGINE DOES NOT COMPLY WITH FEDERAL NONROAD OR ON-HIGHWAY EMISSION REQUIREMENTS. SALE OR INSTALLATION OF THIS ENGINE FOR ANY PURPOSE OTHER THAN AS A REPLACEMENT ENGINE IN A NONROAD VEHICLE OR PIECE OF NONROAD EQUIPMENT BUILT BEFORE JANUARY 1, [INSERT APPROPRIATE YEAR] IS A VIOLATION OF

FEDERAL LAW SUBJECT TO CIVIL PENALTY.

[59 FR 31335, June 17, 1994, as amended at 61 FR 58106, Nov. 12, 1996]

§ 89.1004 General enforcement provisions.

(a) *Information collection provisions.* (1) Every manufacturer of new nonroad engines and other persons subject to the requirements of this part must establish and maintain records, perform tests where such testing is not otherwise reasonably available under this part, make reports and provide information the Administrator may reasonably require to determine whether the manufacturer or other person has acted or is acting in compliance with this part or to otherwise carry out the provisions of this part, and must, upon request of an officer or employee duly designated by the Administrator, permit the officer or employee at reasonable times to have access to and copy such records. The manufacturer shall comply in all respects with the requirements of subpart I of this part.

(2) For purposes of enforcement of this part, an officer or employee duly designated by the Administrator, upon presenting appropriate credentials, is authorized:

(i) To enter, at reasonable times, any establishment of the manufacturer, or of any person whom the manufacturer engaged to perform any activity required under paragraph (a) (1) of this section, for the purposes of inspecting or observing any activity conducted pursuant to paragraph (a)(1) of this section, and

(ii) To inspect records, files, papers, processes, controls, and facilities used in performing an activity required by paragraph (a)(1) of this section, by the manufacturer or by a person whom the manufacturer engaged to perform the activity.

(b) *Exemption provision.* The Administrator may exempt a new nonroad engine from § 89.1003 upon such terms and conditions as the Administrator may find necessary for the purpose of export, research, investigations, studies, demonstrations, or training, or for reasons of national security.

(c) *Importation provision.* (1) A new nonroad engine, vehicle, or equipment offered for importation or imported by a person in violation of § 89.1003 is to be refused admission into the United States, but the Secretary of the Treasury and the Administrator may, by joint regulation, provide for deferring a final determination as to admission and authorizing the delivery of such a nonroad engine offered for import to the owner or consignee thereof upon such terms and conditions (including the furnishing of a bond) as may appear to them appropriate to insure that the nonroad engine will be brought into conformity with the standards, requirements, and limitations applicable to it under this part.

(2) If a nonroad engine is finally refused admission under this paragraph, the Secretary of the Treasury shall cause disposition thereof in accordance with the customs laws unless it is exported, under regulations prescribed by the Secretary, within 90 days of the date of notice of the refusal or additional time as may be permitted pursuant to the regulations.

(3) Disposition in accordance with the customs laws may not be made in such manner as may result, directly or indirectly, in the sale, to the ultimate consumer, of a new nonroad engine that fails to comply with applicable standards of the Administrator under this part.

(d) *Export provision.* A new nonroad engine intended solely for export, and so labeled or tagged on the outside of the container and on the engine itself, shall be subject to the provisions of § 89.1003, except that if the country that is to receive the engine has emission standards that differ from the standards prescribed under subpart B of this part, then the engine must comply with the standards of the country that is to receive the engine.

§ 89.1005 Injunction proceedings for prohibited acts.

(a) The district courts of the United States have jurisdiction to restrain violations of § 89.1003(a).

(b) Actions to restrain violations of § 89.1003(a) must be brought by and in the name of the United States. In an action, subpoenas for witnesses who are required to attend a district court

in any district may run into any other district.

§89.1006 Penalties.

(a) *Violations.* A violation of the requirements of this subpart is a violation of the applicable provisions of the Act, including sections 213(d) and 203, and is subject to the penalty provisions thereunder.

(1) A person who violates §89.1003(a)(1), (a)(4), or (a)(6), or a manufacturer or dealer who violates §89.1003(a)(3)(i), is subject to a civil penalty of not more than $25,000 for each violation.

(2) A person other than a manufacturer or dealer who violates §89.1003(a)(3)(i) or any person who violates §89.1003(a)(3)(ii) is subject to a civil penalty of not more than $2,500 for each violation.

(3) A violation with respect to §89.1003 (a)(1), (a)(3)(i), (a)(4), or (a)(6) constitutes a separate offense with respect to each nonroad engine.

(4) A violation with respect to §89.1003(a)(3)(ii) constitutes a separate offense with respect to each part or component. Each day of a violation with respect to §89.1003(a)(5) constitutes a separate offense.

(5) A person who violates §89.1003(a)(2) or (a)(5) is subject to a civil penalty of not more than $25,000 per day of violation.

(b) *Civil actions.* The Administrator may commence a civil action to assess and recover any civil penalty under paragraph (a) of this section.

(1) An action under this paragraph may be brought in the district court of the United States for the district in which the defendant resides or has the Administrator's principal place of business, and the court has jurisdiction to assess a civil penalty.

(2) In determining the amount of a civil penalty to be assessed under this paragraph, the court is to take into account the gravity of the violation, the economic benefit or savings (if any) resulting from the violation, the size of the violator's business, the violator's history of compliance with Title II of the Act, action taken to remedy the violation, the effect of the penalty on the violator's ability to continue in business, and such other matters as justice may require.

(3) In any such action, subpoenas for witnesses who are required to attend a district court in any district may run into any other district.

(c) *Administrative assessment of certain penalties*—(1) *Administrative penalty authority.* In lieu of commencing a civil action under paragraph (b) of this section, the Administrator may assess any civil penalty prescribed in paragraph (a) of this section, except that the maximum amount of penalty sought against each violator in a penalty assessment proceeding shall not exceed $200,000, unless the Administrator and the Attorney General jointly determine that a matter involving a larger penalty amount is appropriate for administrative penalty assessment. Any such determination by the Administrator and the Attorney General is not subject to judicial review. Assessment of a civil penalty shall be by an order made on the record after opportunity for a hearing held in accordance with the procedures found at part 22 of this chapter. The Administrator may compromise, or remit, with or without conditions, any administrative penalty which may be imposed under this section.

(2) *Determining amount.* In determining the amount of any civil penalty assessed under this paragraph, the Administrator shall take into account the gravity of the violation, the economic benefit or savings (if any) resulting from the violation, the size of the violator's business, the violator's history of compliance with Title II of the Act, action taken to remedy the violation, the effect of the penalty on the violator's ability to continue in business, and such other matters as justice may require.

(3) *Effect of administrator's action.*

(i) Action by the Administrator under this paragraph does not affect or limit the Administrator's authority to enforce any provisions of the Act; except that any violation with respect to which the Administrator has commenced and is diligently prosecuting an action under this paragraph, or for which the Administrator has issued a final order not subject to further judicial review and for which the violator

has paid a penalty assessment under this paragraph shall not be the subject of a civil penalty action under paragraph (b) of this section.

(ii) No action by the Administrator under this paragraph shall affect a person's obligation to comply with a section of this part.

(4) *Finality of order.* An order issued under this subsection is to become final 30 days after its issuance unless a petition for judicial review is filed under paragraph (c)(5) of this section.

(5) *Judicial review.* A person against whom a civil penalty is assessed in accordance with this subsection may seek review of the assessment in the United States District Court for the District of Columbia or for the district in which the violation is alleged to have occurred, in which such person resides, or where the person's principal place of business is located, within the 30-day period beginning on the date a civil penalty order is issued. The person shall simultaneously send a copy of the filing by certified mail to the Administrator and the Attorney General. The Administrator shall file in the court within 30 days a certified copy, or certified index, as appropriate, of the record on which the order was issued. The court is not to set aside or remand any order issued in accordance with the requirements of this paragraph unless substantial evidence does not exist in the record, taken as a whole, to support the finding of a violation or unless the Administrator's assessment of the penalty constitutes an abuse of discretion, and the court is not to impose additional civil penalties unless the Administrator's assessment of the penalty constitutes an abuse of discretion. In any proceedings, the United States may seek to recover civil penalties assessed under this section.

(6) *Collection.* (i) If any person fails to pay an assessment of a civil penalty imposed by the Administrator as provided in this part after the order making the assessment has become final or after a court in an action brought under paragraph (c)(5) of this section has entered a final judgment in favor of the Administrator, the Administrator shall request that the Attorney General bring a civil action in an appropriate district court to recover the amount assessed (plus interest at rates established pursuant to section 6621(a)(2) of the Internal Revenue Code of 1986 from the date of the final order or the date of final judgment, as the case may be). In such an action, the validity, amount, and appropriateness of the penalty is not subject to review.

(ii) A person who fails to pay on a timely basis the amount of an assessment of a civil penalty as described in paragraph (c)(6)(i) of this section shall be required to pay, in addition to that amount and interest, the United States' enforcement expenses, including attorney's fees and costs for collection proceedings, and a quarterly nonpayment penalty for each quarter during which the failure to pay persists. The nonpayment penalty is an amount equal to ten percent of the aggregate amount of that person's penalties and nonpayment penalties which are unpaid as of the beginning of such quarter.

§ 89.1007 Warranty provisions.

(a) The manufacturer of each nonroad engine must warrant to the ultimate purchaser and each subsequent purchaser that the engine is designed, built, and equipped so as to conform at the time of sale with applicable regulations under section 213 of the Act, and is free from defects in materials and workmanship which cause such engine to fail to conform with applicable regulations for its warranty period (as determined under § 89.104–96).

(b) In the case of a nonroad engine part, the manufacturer or rebuilder of the part may certify according to § 85.2112 that use of the part will not result in a failure of the engine to comply with emission standards promulgated in this part.

(c) For the purposes of this section, the owner of any nonroad engine warranted under this part is responsible for the proper maintenance of the engine. Proper maintenance includes replacement and service, at the owner's expense at a service establishment or facility of the owner's choosing, such items as spark plugs, points, condensers, and any other part, item, or device related to emission control (but not designed for emission control) under the terms of the last sentence of section

207(a)(3) of the Act, unless such part, item, or device is covered by any warranty not mandated by this Act.

§ 89.1008 In-use compliance provisions.

(a) Effective with respect to nonroad vehicles, equipment, and engines manufactured during model years 1996 and after:

(1) If the Administrator determines that a substantial number of any class or category of engines, although properly maintained and used, do not conform to the regulations prescribed under section 213 of the Act when in actual use throughout their recall period (as defined under § 89.104–96(b)), the Administrator shall immediately notify the manufacturer of such nonconformity and require the manufacturer to submit a plan for remedying the nonconformity of the engines with respect to which such notification is given.

(i) The manufacturer's plan shall provide that the nonconformity of any such engines which are properly used and maintained will be remedied at the expense of the manufacturer.

(ii) If the manufacturer disagrees with such determination of nonconformity and so advises the Administrator, the Administrator shall afford the manufacturer and other interested persons an opportunity to present their views and evidence in support thereof at a public hearing. Unless, as a result of such hearing, the Administrator withdraws such determination of nonconformity, the Administrator shall, within 60 days after the completion of such hearing, order the manufacturer to provide prompt notification of such nonconformity in accordance with paragraph (a)(2) of this section. The manufacturer shall comply in all respects with the requirements of subpart G of this part.

(2) Any notification required to be given by the manufacturer under paragraph (a)(1) of this section with respect to any class or category of engines shall be given to dealers, ultimate purchasers, and subsequent purchasers (if known) in such manner and containing such information as required in subparts H and I of this part.

(3)(i) The manufacturer shall furnish with each new nonroad engine written instructions for the proper maintenance and use of the engine by the ultimate purchaser as required under § 89.109–96. The manufacturer shall provide in boldface type on the first page of the written maintenance instructions notice that maintenance, replacement, or repair of the emission control devices and systems may be performed by any nonroad engine repair establishment or individual using any nonroad engine part which has been certified as provided in § 89.1007(a).

(ii) The instruction under paragraph (3)(i) of this section must not include any condition on the ultimate purchaser's using, in connection with such engine, any component or service (other than a component or service provided without charge under the terms of the purchase agreement) which is identified by brand, trade, or corporate name. Subject instructions also must not directly or indirectly distinguish between service performed by the franchised dealers of such manufacturer, or any other service establishments with which such manufacturer has a commercial relationship, and service performed by independent nonroad engine repair facilities with which such manufacturer has no commercial relationship.

(iii) The prohibition of paragraph (a)(3)(ii) of this section may be waived by the Administrator if:

(A) The manufacturer satisfies the Administrator that the engine will function properly only if the component or service so identified is used in connection with such engine, and

(B) The Administrator finds that such a waiver is in the public interest.

(iv) In addition, the manufacturer shall indicate by means of a label or tag permanently affixed to the engine that the engine is covered by a certificate of conformity issued for the purpose of assuring achievement of emission standards prescribed under section 213 of the Act. This label or tag shall also contain information relating to control of emissions as prescribed under § 89.110–96.

(b) The manufacturer bears all cost obligation a dealer incurs as a result of a requirement imposed by paragraph (a) of this section. The transfer of any

such cost obligation from a manufacturer to a dealer through franchise or other agreement is prohibited.

(c) If a manufacturer includes in an advertisement a statement respecting the cost or value of emission control devices or systems, the manufacturer shall set forth in the statement the cost or value attributed to these devices or systems by the Secretary of Labor (through the Bureau of Labor Statistics). The Secretary of Labor, and his or her representatives, has the same access for this purpose to the books, documents, papers, and records of a manufacturer as the Comptroller General has to those of a recipient of assistance for purposes of section 311 of the Act.

(d) Any inspection of a nonroad engine for purposes of paragraph (a)(1) of this section, after its sale to the ultimate purchaser, is to be made only if the owner of such vehicle or engine voluntarily permits such inspection to be made, except as may be provided by any state or local inspection program.

PART 90—CONTROL OF EMISSIONS FROM NONROAD SPARK–IGNITION ENGINES

Subpart A—General

Sec.
90.1 Applicability.
90.2 Effective dates.
90.3 Definitions.
90.4 Treatment of confidential information.
90.5 Acronyms and abbreviations.
90.6 Table and figure numbering; position.
90.7 Reference materials.

Subpart B—Emission Standards and Certification Provisions

90.101 Applicability.
90.102 Definitions.
90.103 Exhaust emission standards.
90.104 Compliance with emission standards.
90.105 Useful life period.
90.106 Certificate of conformity.
90.107 Application for certification.
90.108 Certification.
90.109 Requirement of certification—closed crankcase.
90.110 Requirement of certification—prohibited controls.
90.111 Requirement of certification—prohibition of defeat devices.
90.112 Requirement of certification—adjustable parameters.
90.113 In-use testing programs.
90.114 Requirement of certification—engine information label.
90.115 Requirement of certification—supplying production engines upon request.
90.116 Certification procedure—determining engine displacement, engine class, and engine families.
90.117 Certification procedure—test engine selection.
90.118 Certification procedure—service accumulation.
90.119 Certification procedure—testing.
90.120 Certification procedure—use of special test procedures.
90.121 Certification procedure—record-keeping.
90.122 Amending the application and certificate of conformity.
90.123 Denial, revocation of certificate of conformity.
90.124 Request for hearing.
90.125 Hearing procedures.
90.126 Right of entry and access.

Subpart C [Reserved]

Subpart D—Emission Test Equipment Provisions

90.301 Applicability.
90.302 Definitions.
90.303 Symbols, acronyms, abbreviations.
90.304 Test equipment overview.
90.305 Dynamometer specifications and calibration accuracy.
90.306 Dynamometer torque cell calibration.
90.307 Engine cooling system.
90.308 Lubricating oil and test fuels.
90.309 Engine intake air temperature measurement.
90.310 Engine intake air humidity measurement.
90.311 Test conditions.
90.312 Analytical gases.
90.313 Analyzers required.
90.314 Analyzer accuracy and specifications.
90.315 Analyzer initial calibration.
90.316 Hydrocarbon analyzer calibration.
90.317 Carbon monoxide analyzer calibration.
90.318 Oxides of nitrogen analyzer calibration.
90.319 NO_X converter check.
90.320 Carbon dioxide analyzer calibration.
90.321 NDIR analyzer calibration.
90.322 Calibration of other equipment.
90.323 Analyzer bench checks.
90.324 Analyzer leakage check.
90.325 Analyzer interference checks.
90.326 Pre-and post-test analyzer calibration.
90.327 Sampling system requirements.
90.328 Measurement equipment accuracy/calibration frequency table.
90.329 Catalyst thermal stress test.
APPENDIX A TO SUBPART D OF PART 90—TABLES

APPENDIX B TO SUBPART D OF PART 90—FIGURES

Subpart E—Gaseous Exhaust Test Procedures

90.401 Applicability.
90.402 Definitions.
90.403 Symbols, acronyms, and abbreviations.
90.404 Test procedure overview.
90.405 Recorded information.
90.406 Engine parameters to be measured and recorded.
90.407 Engine inlet and exhaust systems.
90.408 Pre-test procedures.
90.409 Engine dynamometer test run.
90.410 Engine test cycle.
90.411 Post-test analyzer procedures.
90.412 Data logging.
90.413 Exhaust sample procedure—gaseous components.
90.414 Raw gaseous exhaust sampling and analytical system description.
90.415 Raw gaseous sampling procedures.
90.416 Intake air flow measurement specifications.
90.417 Fuel flow measurement specifications.
90.418 Data evaluation for gaseous emissions.
90.419 Raw emission sampling calculations—gasoline fueled engines.
90.420 CVS concept of exhaust gas sampling system.
90.421 Dilute gaseous exhaust sampling and analytical system description.
90.422 Background sample.
90.423 Exhaust gas analytical system; CVS grab sample.
90.424 Dilute sampling procedures—CVS calibration.
90.425 CVS calibration frequency.
90.426 Dilute emission sampling calculations—gasoline fueled engines.
90.427 Catalyst thermal stress resistance evaluation.
APPENDIX A TO SUBPART E OF PART 90—TABLES
APPENDIX B TO SUBPART E OF PART 90—FIGURES

Subpart F—Selective Enforcement Auditing

90.501 Applicability.
90.502 Definitions.
90.503 Test orders.
90.504 Testing by the Administrator.
90.505 Maintenance of records; submittal of information.
90.506 Right of entry and access.
90.507 Sample selection.
90.508 Test procedures.
90.509 Calculation and reporting of test results.
90.510 Compliance with acceptable quality level and passing and failing criteria for selective enforcement audits.
90.511 Suspension and revocation of certificates of conformity.
90.512 Request for public hearing.
90.513 Administrative procedures for public hearing.
90.514 Hearing procedures.
90.515 Appeal of hearing decision.
90.516 Treatment of confidential information.
APPENDIX A TO SUBPART F OF PART 90—SAMPLING PLANS FOR SELECTIVE ENFORCEMENT AUDITING OF NONROAD ENGINES

Subpart G—Importation of Nonconforming Engines

90.601 Applicability.
90.602 Definitions.
90.603 (Reserved)
90.604 General requirements.
90.605–90.610 (Reserved)
90.611 Importation for purposes other than resale.
90.612 Exemptions and exclusions.
90.613 Prohibited acts; penalties.
90.614 Treatment of confidential information.

Subpart H [Reserved]

Subpart I—Emission-related Defect Reporting Requirements, Voluntary Emission Recall Program

90.801 Applicability.
90.802 Definitions.
90.803 Emission defect information report.
90.804 Voluntary emissions recall.
90.805 Reports, voluntary recall plan filing, record retention.
90.806 Responsibility under other legal provisions preserved.
90.807 Disclaimer of production warranty applicability.

Subpart J—Exclusion and Exemption of Nonroad Engines From Regulations

90.901 Applicability.
90.902 Definitions.
90.903 Exclusions, application of section 216 (10) and (11) of the Act.
90.904 Who may request an exemption.
90.905 Testing exemption.
90.906 Manufacturer-owned exemption and precertification exemption.
90.907 Display exemption.
90.908 National security exemption.
90.909 Export exemptions.
90.910 Granting of exemptions.
90.911 Submission of exemption requests.
90.912 Treatment of confidential information.

Subpart K—Prohibited Acts and General Enforcement Provisions

90.1001 Applicability.
90.1002 Definitions.
90.1003 Prohibited acts.
90.1004 General enforcement provisions.
90.1005 Injunction proceedings for prohibited acts.
90.1006 Penalties.

Subpart L—Emission Warranty and Maintenance Instructions

90.1101 Applicability.
90.1102 Definitions.
90.1103 Emission warranty, warranty period.
90.1104 Furnishing of maintenance instructions to ultimate purchaser.

AUTHORITY: Sections 203, 204, 205, 206, 207, 208, 209, 213, 215, 216, and 301(a) of the Clean Air Act, as amended (42 U.S.C. 7522, 7523, 7524, 7525, 7541, 7542, 7543, 7547, 7549, 7550, and 7601(a)).

SOURCE: 60 FR 34598, July 3, 1995, unless otherwise noted.

Subpart A—General

§ 90.1 Applicability.

(a) This part applies to nonroad spark-ignition engines and vehicles that have a gross power output at or below 19 kilowatts (kW) and that are used for any purpose.

(b) Notwithstanding paragraph (a) of this section, the following nonroad engines and vehicles are not subject to the provisions of this part:

(1) Engines used to propel marine vessels as defined in the General Provisions of the United States Code, 1 U.S.C. 3 (1992);

(2) Engines that are both:

(i) Used in underground mining or in underground mining equipment; and

(ii) Regulated by the Mining Safety and Health Administration (MSHA) in 30 CFR parts 7, 31, 32, 36, 56, 57, 70, and 75;

(3) Engines used in motorcycles and regulated in 40 CFR part 86, subpart E;

(4) Engines used in aircraft as that term is defined in 40 CFR 87.1(a);

(5) Engines used in recreational vehicles and which are defined by the following criteria:

(i) The engine's rated speed is greater than or equal to 5,000 RPM;

(ii) The engine has no installed speed governor;

(iii) The engine is not used for the propulsion of a marine vessel; and

(iv) The engine does not meet the criteria to be categorized as a Class III, IV, or V engine, as indicated in § 90.103.

(c) Engines subject to the provisions of this subpart are also subject to the provisions of subparts B, D, E, F, G, I, J, K, and L of this part.

§ 90.2 Effective dates.

(a) This subpart applies to nonroad spark-ignition engines at or below 19 kW effective with the 1997 model year.

(b) Notwithstanding paragraph (a) of this section, this subpart applies to class V engines, as specified in § 90.116(b)(5), that are preempted from regulation in California by section 209(e)(1)(A) of the Act, effective January 1, 1998.

§ 90.3 Definitions.

The following definitions apply to part 90. All terms not defined herein have the meaning given them in the Act.

Act means the Clean Air Act, as amended, 42 U.S.C. 7401 et seq.

Adjustable parameter means any device, system, or element of design which is physically capable of being adjusted (including those which are difficult to access) and which, if adjusted, may affect emissions or engine performance during emission testing or normal in-use operation.

Administrator means the Administrator of the Environmental Protection Agency or his or her authorized representative.

Auxiliary emission control device (AECD) means any element of design that senses temperature, vehicle speed, engine RPM, transmission gear, or any other parameter for the purpose of activating, modulating, delaying, or deactivating the operation of any part of the emission control system.

Certification means, with respect to new nonroad engines, obtaining a certificate of conformity for an engine family complying with the nonroad engine emission standards and requirements specified in this part.

Emission control system means any device, system, or element of design which controls or reduces the emission of substances from an engine.

Engine as used in this part, refers to nonroad engine.

Engine family means a group of engines, as specified in § 90.116.

Engine manufacturer means any person engaged in the manufacturing or assembling of new nonroad engines or the importing of such engines for resale, or who acts for and is under the control of any such person in connection with the distribution of such engines. Engine manufacturer does not include any dealer with respect to new nonroad engines received by such person in commerce.

EPA enforcement officer means any officer, employee, or authorized representative of the U.S. Environmental Protection Agency so designated in writing by the Administrator (or by his or her designee).

Exhaust emissions means matter emitted into the atmosphere from any opening downstream from the exhaust port of a nonroad engine.

Fuel system means all components involved in the transport, metering, and mixture of the fuel from the fuel tank to the combustion chamber(s) including the following: fuel tank, fuel tank cap, fuel pump, fuel lines, oil injection metering system, carburetor or fuel injection components, and all fuel system vents.

Gross power means the power measured at the crankshaft or its equivalent, the engine being equipped only with the standard accessories (such as oil pumps, coolant pumps, and so forth) necessary for its operation on the test bed.

Handheld equipment engine means a nonroad engine that meets the requirements specified in § 90.103(a)(2) (i) through (iv).

Model year (MY) means the manufacturer's annual new model production period which includes January 1 of the calendar year, ends no later than December 31 of the calendar year, and does not begin earlier than January 2 of the previous calendar year. Where a manufacturer has no annual new model production period, model year means calendar year.

New, for the purposes of this part, means a nonroad engine or nonroad vehicle the equitable or legal title to which has never been transferred to an ultimate purchaser. Where the equitable or legal title to the engine or vehicle is not transferred to an ultimate purchaser until after the engine or vehicle is placed into service, then the engine or vehicle will no longer be new after it is placed into service. A nonroad engine or vehicle is placed into service when it is used for its functional purposes. With respect to imported nonroad engines or nonroad vehicles, the term ''new'' means an engine or vehicle that is not covered by a certificate of conformity issued under this part at the time of importation, and that is manufactured after the effective date of a regulation issued under this part which is applicable to such engine or vehicle (or which would be applicable to such engine or vehicle had it been manufactured for importation into the United States).

Nonroad engine means:

(1) Except as discussed in paragraph (2) of this definition, any internal combustion engine:

(i) In or on a piece of equipment that is self-propelled or serves a dual purpose by both propelling itself and performing another function (such as garden tractors, off-highway mobile cranes, and bulldozers); or

(ii) In or on a piece of equipment that is intended to be propelled while performing its function (such as lawnmowers and string trimmers); or

(iii) That, by itself or in or on a piece of equipment, is portable or transportable, meaning designed to be and capable of being carried or moved from one location to another. Indicia of transportability include, but are not limited to, wheels, skids, carrying handles, dolly, trailer, or platform.

(2) An internal combustion engine is not a nonroad engine if:

(i) The engine is used to propel a motor vehicle or a vehicle used solely for competition, or is subject to standards promulgated under section 202 of the Act; or

(ii) The engine is regulated by a federal New Source Performance Standard promulgated under section 111 of the Act; or

(iii) The engine otherwise included in paragraph (1)(iii) of this definition remains or will remain at a location for more than 12 consecutive months or a

shorter period of time for an engine located at a seasonal source. A location is any site at a building, structure, facility, or installation. Any engine (or engines) that replaces an engine at a location and that is intended to perform the same or similar function as the engine replaced will be included in calculating the consecutive time period. An engine located at a seasonal source is an engine that remains at a seasonal source during the full annual operating period of the seasonal source. A seasonal source is a stationary source that remains in a single location on a permanent basis (i.e., at least two years) and that operates at that single location approximately three months (or more) each year. This paragraph does not apply to an engine after the engine is removed from the location.

Nonroad vehicle means a vehicle that is powered by a nonroad engine as defined in this section and that is not a motor vehicle or a vehicle used solely for competition. Nonroad vehicle also includes equipment that is powered by nonroad engines.

Nonroad vehicle manufacturer means any person engaged in the manufacturing or assembling of new nonroad vehicles or importing such vehicles for resale, or who acts for and is under the control of any such person in connection with the distribution of such vehicles. A nonroad vehicle manufacturer does not include any dealer with respect to new nonroad vehicles received by such person in commerce.

Operating hours means:

(1) For engine storage areas or facilities, all times during which personnel other than custodial personnel are at work in the vicinity of the storage area or facility and have access to it.

(2) For all other areas or facilities, all times during which an assembly line is in operation or all times during which testing, maintenance, service accumulation, production or compilation of records, or any other procedure or activity related to certification testing, to translation of designs from the test stage to the production stage, or to engine manufacture or assembly is being carried out in a facility.

Presentation of credentials means the display of the document designating a person as an EPA enforcement officer or EPA authorized representative.

Scheduled maintenance means any adjustment, repair, removal, disassembly, cleaning, or replacement of components or systems required by the manufacturer to be performed on a periodic basis to prevent part failure or vehicle or engine malfunction, or those actions anticipated as necessary to correct an overt indication of malfunction or failure for which periodic maintenance is not appropriate.

Test engine means the engine or group of engines that a manufacturer uses during certification to determine compliance with emission standards.

Ultimate purchaser means, with respect to any new nonroad engine or new nonroad vehicle, the first person who in good faith purchases such new nonroad engine or vehicle for purposes other than resale.

Used solely for competition means exhibiting features that are not easily removed and that would render its use other than in competition unsafe, impractical, or highly unlikely.

Warranty period means the period of time the engine or part is covered by the warranty provisions.

§ 90.4 Treatment of confidential information.

(a) Any manufacturer may assert that some or all of the information submitted pursuant to this part is entitled to confidential treatment as provided by part 2, subpart B of this chapter.

(b) Any claim of confidentiality must accompany the information at the time it is submitted to EPA.

(c) To assert that information submitted pursuant to this subpart is confidential, a manufacturer must indicate clearly the items of information claimed confidential by marking, circling, bracketing, stamping, or otherwise specifying the confidential information. Furthermore, EPA requests, but does not require, that the submitter also provide a second copy of its submittal from which all confidential information has been deleted. If a need arises to publicly release nonconfidential information, EPA will assume that the submitter has accurately deleted

the confidential information from this second copy.

(d) If a claim is made that some or all of the information submitted pursuant to this subpart is entitled to confidential treatment, the information covered by that confidentiality claim will be disclosed by the Administrator only to the extent and by means of the procedures set forth in part 2, subpart B of this chapter.

(e) Information provided without a claim of confidentiality at the time of submission may be made available to the public by EPA without further notice to the submitter, in accordance with §2.204(c)(2)(i)(A) of this chapter.

§90.5 Acronyms and abbreviations.

The following acronyms and abbreviations apply to part 90.

AECD—Auxiliary emission control device
ASME—American Society of Mechanical Engineers
ASTM—American Society for Testing and Materials
CAA—Clean Air Act
CAAA—Clean Air Act Amendments of 1990
CLD—chemiluminescent detector
CO—Carbon monoxide
CO_2—Carbon dioxide
EPA—Environmental Protection Agency
FTP—Federal Test Procedure
g/kW-hr—grams per kilowatt hour
HC—hydrocarbons
HCLD—heated chemiluminescent detector
HFID—heated flame ionization detector
ICI—independent Commercial Importer
NDIR—non-dispersive infrared analyzer
NIST—National Institute for Standards and Testing
NO—Nitric oxide
NO_2—Nitrogen dioxide
NO_X—Oxides of nitrogen
O_2—Oxygen
OEM—original equipment manufacturer
PMD—paramagnetic detector
SAE—Society of Automotive Engineers
SEA—Selective Enforcement Auditing
SI—spark-ignition
U.S.C.—United States Code
VOC—Volatile organic compounds
ZROD—zirconiumdioxide sensor

§90.6 Table and figure numbering; position.

(a) Tables for each subpart appear in an appendix at the end of the subpart. Tables are numbered consecutively by order of appearance in the appendix. The table title will indicate the topic.

(b) Figures for each subpart appear in an appendix at the end of the subpart. Figures are numbered consecutively by order of appearance in the appendix. The figure title will indicate the topic.

§90.7 Reference materials.

(a) *Incorporation by reference.* The documents in paragraph (b) of this section have been incorporated by reference. The incorporation by reference was approved by the Director of the Federal Register in accordance with 5 U.S.C. 552(a) and 1 CFR part 51. Copies may be inspected at U.S. EPA Air and Radiation Docket, room M–1500, 401 M Street, S.W., Washington D.C. 20460, or at the Office of the Federal Register, 800 North Capitol Street, NW., suite 700, Washington, DC.

(b) The following paragraphs and tables set forth the material that has been incorporated by reference in this part.

(1) *ASTM material.* The following table sets forth material from the American Society for Testing and Materials which has been incorporated by reference. The first column lists the number and name of the material. The second column lists the section(s) of this part, other than §90.7, in which the matter is referenced. The second column is presented for information only and may not be all inclusive. Copies of these materials may be obtained from American Society for Testing and Materials, 1916 Race St., Philadelphia, PA 19103.

Document number and name	40 CFR part 90 reference
ASTM D86–93:	
Standard Test Method for Distillation of Petroleum Products	Appendix A to subpart D, Table 3.
ASTM D1319–89:	

Document number and name	40 CFR part 90 reference
Standard Test Method for Hydrocarbon Types in Liquid Petroleum Products by Fluorescent Indicator Adsorption.	Appendix A to subpart D, Table 3.
ASTM D2622–92:	
Standard Test Method for Sulfur in Petroleum Products by X-ray Spectrometry.	Appendix A to subpart D, Table 3.
ASTM D2699–92:	
Standard Test Method for Knock Characteristics of Motor Fuels by the Research Method.	Appendix A to subpart D, Table 3.
ASTM D2700–92:	
Standard Test Method for Knock Characteristics of Motor and Aviation Fuels by the Motor Method.	Appendix A to subpart D, Table 3.
ASTM D3231–89:	
Standard Test Method for Phosphorus in Gasoline	Appendix A to subpart D, Table 3.
ASTM D3606–92:	
Standard Test Method for Determination of Benzene and Toluene in Finished Motor and Aviation Gasoline by Gas Chromatography.	Appendix A to subpart D, Table 3.
ASTM D5191–93a:	
Standard Test Method for Vapor Pressure of Petroleum Products (Mini Method).	Appendix A to subpart D, Table 3.
ASTM E29–93a:	
Standard Practice for Using Significant Digits in Test Data to Determine Conformance with Specifications.	90.116; 90.509.

(2) *SAE material.* The following table sets forth material from the Society of Automotive Engineers which has been incorporated by reference. The first column lists the number and name of the material. The second column lists the section(s) of this part, other than § 90.7, in which the matter is referenced. The second column is presented for information only and may not be all inclusive. Copies of these materials may be obtained from Society of Automotive Engineers International, 400 Commonwealth Dr., Warrendale, PA 15096–0001.

Document number and name	40 CFR part 90 reference
SAE J1930 September 1991, Electrical/Electronic Systems Diagnostic Terms, Definitions, Abbreviations and Acronyms	90.114
SAE Paper 770141, Optimization of a Flame Ionization Detector for Determination of Hydrocarbon in Diluted Automotive Exhausts, Glenn D. Reschke, 1977	90.316

Subpart B—Emission Standards and Certification Provisions

§ 90.101 Applicability.

The requirements of subpart B are applicable to all nonroad engines and vehicles subject to the provisions of subpart A of part 90.

§ 90.102 Definitions.

The definitions in subpart A of part 90 apply to this subpart. All terms not defined herein or in subpart A have the meaning given them in the Act. The following definitions also apply to this subpart.

Attitudinal control means the operator regulates either the horizontal or vertical position of the equipment, or both.

Carry means the operator completely bears the weight of the equipment, including the engine.

Support means that the operator holds the equipment in position so as to prevent it from falling, slipping or sinking. It is not necessary for the entire weight of the equipment to be borne by the operator.

§ 90.103 Exhaust emission standards.

(a) Exhaust emissions from new nonroad spark-ignition engines at or below 19 kilowatts (kW), effective with the 1997 model year, shall not exceed the following levels:

EXHAUST EMISSION STANDARDS

[Grams per kilowatt-hour]

Engine displacement class	Hydrocarbon plus oxides of nitrogen	Hydrocarbon	Carbon monoxide	Oxides of nitrogen
I	16.1	.....	519	.....
II	13.4	.....	519	.....
III	.....	295	805	5.36
IV	.....	241	805	5.36
V	.....	161	603	5.36

(1) Each engine displacement class has a unique set of exhaust emission standards. Boundaries for each class are indicated in §90.116(b).

(2) Emission standards for classes III, IV, V may be used only if an engine meets at least one of the following requirements:

(i) The engine must be used in a piece of equipment that is carried by the operator throughout the performance of its intended function(s);

(ii) The engine must be used in a piece of equipment that must operate multipositionally, such as upside down or sideways, to complete its intended function(s);

(iii) The engine must be used in a piece of equipment for which the combined engine and equipment dry weight is under 14 kilograms, no more than two wheels are present on the equipment, and at least one of the following attributes is also present:

(A) The operator must alternately provide support or carry the equipment throughout the performance of its intended function(s);

(B) The operator must provide support or attitudinal control for the equipment throughout the performance of its intended function(s); and

(C) The engine must be used in a generator or pump;

(iv) The engine must be used to power one-person augers, with a combined engine and equipment dry weight under 20 kilograms.

(3) Notwithstanding paragraph (a)(2) of this section, two-stroke engines used to power lawnmowers may meet class III, IV, or V standards until model year 2003.

(4) Notwithstanding paragraph (a)(2) of this section, two-stroke engines used to power snowthrowers may meet class III, IV, or V standards.

(5) Notwithstanding paragraph (a)(2) of this section, engines used exclusively to power snowthrowers or ice augers, at the option of the engine manufacturer, need not certify to or comply with standards regulating emissions of hydrocarbons. If the manufacturer exercises the option to certify to standards regulating such emissions, such engines must meet such standards. If the engine produced by the manufacturer is to be used in any equipment or vehicle other than a snowthrower or ice auger, it must be certified to the applicable standard regulating emissions of hydrocarbons.

(b) Exhaust emissions will be measured using the procedures set forth in subpart E of this part.

[60 FR 34598, July 3, 1995, as amended at 61 FR 58300, Nov. 13, 1996]

§90.104 Compliance with emission standards.

(a) If all test engines representing an engine family have emissions less than or equal to each emission standard in a given engine displacement class, that family complies with that class of emission standards.

(b) If any test engine representing an engine family has emissions greater than any one emission standard in a given engine displacement class, that family will be deemed not in compliance with that class of emission standards.

(c) If catalysts are used in an engine family, the engine manufacturer must affirm that catalyst durability has been confirmed on the basis of the evaluation procedure that is specified in subpart E of this part.

§90.105 Useful life period.

A useful life period for engines subject to the provisions of subpart A of this part will be set by the Agency in the second phase of small engine regulation and will be promulgated no later than April 30, 1997.

§90.106 Certificate of conformity.

(a) Except as specified in §90.2(b), every manufacturer of new engines produced during or after model year 1997 must obtain a certificate of conformity covering such engines; however, engines manufactured during an annual

production period beginning prior to September 1, 1996 are not required to be certified.

(b)(1) The annual production period begins either when an engine family is first produced or on January 2 of the calendar year preceding the year for which the model year is designated, whichever date is later. The annual production period ends either when the last engine is produced or on December 31 of the calendar year for which the model year is named, whichever date is sooner.

(2) Notwithstanding paragraph (b)(1) of this section, annual production periods beginning prior to September 1, 1996 may not exceed 12 months in length.

(c) Except as provided in paragraph (d) of this section, a certificate of conformity is deemed to cover the engines named in such certificate and produced during the annual production period, as defined in paragraph (b) of this section.

(d) Except as provided in paragraph (e) of this section, the certificate of conformity must be obtained from the Administrator prior to selling, offering for sale, introducing into commerce, or importing into the United States the new engine. Engines produced prior to the effective date of a certificate of conformity may also be covered by the certificate, once it is effective, if the following conditions are met:

(1) The engines conform in all respects to the engines described in the application for the certificate of conformity.

(2) The engines are not sold, offered for sale, introduced into commerce, or delivered for introduction into commerce prior to the effective date of the certificate of conformity.

(3) EPA is notified prior to the beginning of production when such production will start, and EPA is provided a full opportunity to inspect and/or test the engines during and after their production. EPA must have the opportunity to conduct SEA production line testing as if the vehicles had been produced after the effective date of the certificate.

(e) Engines that are certified by EPA prior to January 2, 1996 for model year 1997 may be delivered for introduction into commerce prior to January 2, 1996 once a certificate of conformity has been issued.

(f) Engines imported by an original equipment manufacturer after December 31 of the calendar year for which the model year is named are still covered by the certificate of conformity as long as the production of the engine was completed before December 31 of that year.

§ 90.107 Application for certification.

(a) For each engine family, the engine manufacturer must submit to the Administrator a completed application for a certificate of conformity.

(b) The application must be approved and signed by the authorized representative of the manufacturer.

(c) The application must be updated and corrected by amendment as provided in § 90.122 to accurately reflect the manufacturer's production.

(d) *Required content.* Each application must include the following information:

(1) A description of the basic engine design including, but not limited to, the engine family specifications;

(2) An explanation of how the emission control system operates, including a detailed description of all emission control system components (Detailed component calibrations are not required to be included; they must be provided if requested, however.), each auxiliary emission control device (AECD), and all fuel system components to be installed on any production or test engine(s);

(3) Proposed test engine(s) selection and the rationale for the test engine(s) selection;

(4) Special or alternate test procedures, if applicable;

(5) The service accumulation period necessary to break in the test engine(s) and stabilize emission levels.

(6) A description of all adjustable operating parameters including the following:

(i) The nominal or recommended setting and the associated production tolerances;

(ii) The intended physically adjustable range;

(iii) The limits or stops used to establish adjustable ranges;

(iv) Production tolerances of the limits or stops used to establish each physically adjustable range; and

(v) Information relating to why the physical limits or stops used to establish the physically adjustable range of each parameter, or any other means used to inhibit adjustment, are effective in preventing adjustment of parameters to settings outside the manufacturer's intended physically adjustable ranges on in-use engines;

(7) The proposed engine information label;

(8) All test data obtained by the manufacturer on each test engine;

(9) A statement that the test engine(s), as described in the manufacturer's application for certification, has been tested in accordance with the applicable test procedures, utilizing the fuels and equipment required under subparts D and E of this part, and that on the basis of such tests the engine(s) conforms to the requirements of this part; and

(10) An unconditional statement certifying that all engines in the engine family comply with all requirements of this part and the Clean Air Act.

(e)(1) In addition to the information specified in paragraph (d) of this section, manufacturers of two-stroke lawnmower engines must submit with their application for a certificate of conformity:

(i) For model year 1997, information establishing the highest number of two-stroke lawnmower engines produced in a single annual production period from 1992 through 1994. This number will be known as the production baseline.

(ii) For model years 1998 through 2002, information documenting the previous year's production and projected production for the current year.

(2) In model year 1997, two-stroke lawnmower engine manufacturers may produce up to 100 percent of their production baseline established under paragraph (e)(1)(i) of this section.

(3) In model year 1998, two-stroke lawnmower engine manufacturers may produce up to 75 percent of their production baseline.

(4) From model years 1999 through 2002, two-stroke lawnmower engine manufacturers may produce up to 50 percent of their production baseline.

(5) In model year 2003, two-stroke lawnmower engine manufacturers must meet class I or II standards specified in §90.103(a). If in model year 2003 those standards have been superseded by Phase 2 standards, two-stroke lawnmower engine manufacturers must meet the Phase 2 standards that are equivalent to the class I or II standards.

(f) At the Administrator's request, the manufacturer must supply such additional information as may be required to evaluate the application including, but not limited to, projected nonroad engine production.

(g)(1) The Administrator may modify the information submission requirements of paragraph (d) of this section, provided that all of the information specified therein is maintained by the engine manufacturer as required by §90.121, and amended, updated, or corrected as necessary.

(2) For the purposes of this paragraph, §90.121(a)(1) includes all information specified in paragraph (d) of this section whether or not such information is actually submitted to the Administrator for any particular model year.

(3) The Administrator may review an engine manufacturer's records at any time. At the Administrator's discretion, this review may take place either at the manufacturer's facility or at another facility designated by the Administrator.

[60 FR 34598, July 3, 1995, as amended at 61 FR 20742, May 8, 1996]

§90.108 Certification.

(a) If, after a review of the manufacturer's submitted application, information obtained from any inspection, and such other information as the Administrator may require, the Administrator determines that the application is complete and that the engine family meets the requirements of this part and the Clean Air Act, the Administrator shall issue a certificate of conformity.

(b) The Administrator shall give a written explanation when certification

is denied. The manufacturer may request a hearing on a denial. (See § 90.124 for procedure.)

§ 90.109 Requirement of certification—closed crankcase.

(a) An engine's crankcase must be closed.

(b) For purposes of this section, ''crankcase'' means the housing for the crankshaft and other related internal parts.

(c) Notwithstanding paragraph (a) of this section, the Administrator will allow open crankcases for engines used exclusively to power snowthrowers based upon a manufacturer's demonstration that all applicable emission standards will be met by the engine for the combination of emissions from the crankcase, and exhaust emissions measured using the procedures in subpart E of this part. This demonstration may be made based upon best engineering judgment. Upon request of the Administrator, the manufacturer must provide an explanation of any procedure or methodology used to determine that the total CO emissions from the crankcase and the exhaust are below the applicable standard for CO.

[60 FR 34598, July 3, 1995, as amended at 61 FR 58301, Nov. 13, 1996]

§ 90.110 Requirement of certification—prohibited controls.

(a) An engine may not be equipped with an emission control device, system, or element of design for the purpose of complying with emission standards if such device, system, or element of design will cause or contribute to an unreasonable risk to public health, welfare, or safety in its operation or function.

(b) An engine with an emission control device, system, or element of design may not emit any noxious or toxic substance which would not be emitted in the operation of such engine in the absence of the device, system, or element of design except as specifically permitted by regulation.

§ 90.111 Requirement of certification—prohibition of defeat devices.

(a) An engine may not be equipped with a defeat device.

(b) For purposes of this section, ''defeat device'' means any device, system, or element of design which senses operation outside normal emission test conditions and reduces emission control effectiveness.

(1) Defeat device includes any auxiliary emission control device (AECD) that reduces the effectiveness of the emission control system under conditions which may reasonably be expected to be encountered in normal operation and use unless such conditions are included in the test procedure.

(2) Defeat device does not include such items which either operate only during engine starting or are necessary to protect the engine (or vehicle in which it is installed) against damage or accident during its operation.

§ 90.112 Requirement of certification—adjustable parameters.

(a) Engines equipped with adjustable parameters must comply with all requirements of this subpart for any specification within the physically available range.

(b) An operating parameter is not considered adjustable if it is permanently sealed by the manufacturer or otherwise not normally accessible using ordinary tools.

(c) The Administrator may require that adjustable parameters be set to any specification within the adjustable range during certification or a selective enforcement audit to determine compliance with the requirements of this subpart.

§ 90.113 In-use testing program.

(a) At the time of certification the engine manufacturer may propose which engine families should be included in an in-use test program. EPA will approve a manufacturer's test program if the selected engine families represent an adequate consideration of the elements listed in paragraphs (b) and (c) of this section.

(b) *Number of engines to be tested.* The number of engines to be tested by a manufacturer is determined by the following method:

(1) For an engine manufacturer with total projected annual production of more than 75,000 engines destined for the United States market for that

model year, the minimum number of engines to be tested may be the lowest of the numbers determined in paragraph (b)(1)(i), (ii) or (iii) of this section:

(i) Divide the manufacturer's total projected annual production of small SI engines destined for the United States market for that model year by 50,000, and round to the nearest whole number;

(ii) Test five engines each from 25 percent of all engine families certified in that model year; and

(iii) Test three engines each from 50 percent of all engine families certified in that model year.

(2) An engine manufacturer with total projected annual production of 75,000 engines or less destined for the United States market for that model year may test a minimum of two engines.

(c) *Criteria for selecting test engines.* An engine manufacturer may select test engines from engine families utilizing the following criteria and in the order specified:

(1) Engine families using emission control technology which most likely will be used on Phase 2 engines;

(2) Engine families using aftertreatment;

(3) Engine families certified to different emission standards;

(4) Different engine designs (such as sidevalve head versus overhead valve engines);

(5) Engine families using emission control technology specifically installed to achieve compliance with emission standards of this part;

(6) The engine family with the highest projected annual sales; and

(7) Engine families which meet the above criteria, but have not been included in prior model year in-use testing programs as required by these provisions.

(d) *Collection of in-use engines.* An engine manufacturer may procure in-use engines which have been operated for between half and three-quarters of the engine's advertised (or projected) useful life. All testing may be completed within three years from the date the certificate is first issued for an engine family undergoing in-use testing.

(1) Test engines may be procured from sources not associated with the engine manufacturer or vehicle manufacturer, except that with prior approval of the Administrator, an engine manufacturer with annual sales of less than 50,000 engines may obtain in-use engines associated with itself or its vehicle manufacturer.

(2) A test engine should have a maintenance history representative of actual in-use conditions.

(i) A manufacturer may question the end user regarding the accumulated usage, maintenance, operating conditions, and storage of the test engines.

(ii) Documents used in the procurement process may be maintained as required in §90.121.

(3) *Maintenance and testing of test engines.*

(i) The manufacturer may perform minimal set-to-spec maintenance on a test engine. Maintenance may include only that which is listed in the owner's instructions for engines with the amount of service and age of the acquired test engine.

(ii) Documentation of all maintenance and adjustments may be maintained and retained as required by §90.121.

(4) One valid emission test may be conducted for each in-use engine.

(5) If a selected in-use engine fails to comply with any applicable certification emission standard, the manufacturer may determine the reason for noncompliance. The manufacturer may report all determinations for noncompliance in its annual in-use test result report as described below.

(e) *In-use test program reporting.* The manufacturer may submit to the Administrator by January 30 of each calendar year all emission testing results generated from in-use testing. The following information may be reported for each test engine:

(1) Engine family;

(2) Model;

(3) Engine serial number;

(4) Date of manufacture;

(5) Estimated hours of use;

(6) Results of all emission testing;

(7) Summary of all maintenance and/or adjustments performed;

(8) Summary of all modifications and/or repairs; and

(9) Determinations of compliance and/or noncompliance.

(f) The Administrator may approve and/or suggest modifications to a manufacturer's in-use testing program.

§ 90.114 Requirement of certification—engine information label.

(a) The engine manufacturer must affix at the time of manufacture a permanent and legible label identifying each nonroad engine. The label must meet the following requirements:

(1) Be attached in such a manner that it cannot be removed without destroying or defacing the label;

(2) Be durable and readable for the entire engine life;

(3) Be secured to an engine part necessary for normal engine operation and not normally requiring replacement during engine life;

(4) Be written in English; and

(5) Be located so as to be readily visible to the average person after the engine is installed in the vehicle.

(b) If the nonroad vehicle obscures the label on the engine, the nonroad vehicle manufacturer must attach a supplemental label so that this label is readily visible to the average person. The supplemental label must:

(1) Be attached in such a manner that it cannot be removed without destroying or defacing the label;

(2) Be secured to a vehicle part necessary for normal operation and not normally requiring replacement during the vehicle life; and

(3) Be identical in content to the label which was obscured.

(c) The label must contain the following information:

(1) The heading ''Important Engine Information;''

(2) The full corporate name and trademark of the engine manufacturer;

(3) The statement, ''This (specify vehicle or engine, as applicable) is certified to operate on (specify operating fuel(s));''

(4) Identification of the Exhaust Emission Control System (Abbreviations may be used and must conform to the nomenclature and abbreviations provided in the Society of Automotive Engineers procedure J1930, ''Electrical/Electronic Systems Diagnostic Terms, Definitions, Abbreviations and Acronyms,'' September 1991. This procedure has been incorporated by reference. See § 90.7.);

(5) All engine lubricant requirements;

(6) Date of engine manufacture [day (optional), month and year];

(7) The statement ''This engine conforms to [model year] U.S. EPA regulations for small nonroad engines.'';

(8) EPA standardized engine family designation;

(9) Engine displacement [in cubic centimeters]; and

(10) Other information concerning proper maintenance and use or indicating compliance or noncompliance with other standards may be indicated on the label.

(d) If there is insufficient space on the engine (or on the vehicle where a supplemental label is required under paragraph (b) of this section) to accommodate a label including all the information required in paragraph (c) of this section, the manufacturer may delete or alter the label as indicated in this paragraph. The information deleted from the label must appear in the owner's manual.

(1) Exclude the information required in paragraphs (c)(3), (4), and (5) of this section. The fuel or lubricant may be specified elsewhere on the engine.

(2) Exclude the information required by paragraph (c)(6) of this section, if the date the engine was manufactured is stamped on the engine.

(e) The Administrator may, upon request, waive or modify the label content requirements of paragraphs (c) and (d) of this section, provided that the intent of such requirements is met.

§ 90.115 Requirement of certification—supplying production engines upon request.

Upon the Administrator's request, the manufacturer must supply a reasonable number of production engines for testing and evaluation. These engines must be representative of typical production and supplied for testing at such time and place and for such reasonable periods as the Administrator may require.

§90.116 Certification procedure—determining engine displacement, engine class, and engine families.

(a) Engine displacement must be calculated using nominal engine values and rounded to the nearest whole cubic centimeter in accordance with ASTM E29–93a. This procedure has been incorporated by reference. See §90.7.

(b) Engines will be divided into classes by the following:

(1) Class I—engines less than 225 cc in displacement,

(2) Class II—engines greater than or equal to 225 cc in displacement,

(3) Class III—handheld equipment engines less than 20 cc in displacement,

(4) Class IV—handheld equipment engines equal or greater than 20 cc but less than 50 cc in displacement, and

(5) Class V—handheld equipment engines equal to or greater than 50 cc in displacement.

(c) The manufacturer's product line will be divided into groupings of engine families as specified by paragraph (d) of this section.

(d) To be classed in the same engine family, engines must be identical in all of the following applicable respects:

(1) The combustion cycle;

(2) The cooling mechanism;

(3) The cylinder configuration (inline, vee, opposed, bore spacings, and so forth);

(4) The number of cylinders;

(5) The engine class;

(6) The number of catalytic converters, location, volume, and composition; and

(7) The thermal reactor characteristics.

(e) At the manufacturer's option, engines identical in all the respects listed in paragraph (d) of this section may be further divided into different engine families if the Administrator determines that they may be expected to have different emission characteristics. This determination is based upon the consideration of features such as:

(1) The bore and stroke;

(2) The combustion chamber configuration;

(3) The intake and exhaust timing method of actuation (poppet valve, reed valve, rotary valve, and so forth);

(4) The intake and exhaust valve or port sizes, as applicable;

(5) The fuel system;

(6) The exhaust system; and

(7) The method of air aspiration.

(f) Where engines are of a type which cannot be divided into engine families based upon the criteria listed in paragraph (d) of this section, the Administrator will establish families for those engines based upon the features most related to their emission characteristics.

§90.117 Certification procedure—test engine selection.

(a) The manufacturer must select, from each engine family, a test engine that the manufacturer determines to be most likely to exceed the emission standard.

(b) The test engine must be constructed to be representative of production engines.

§90.118 Certification procedure—service accumulation.

(a)(1) The test engine must be operated with all emission control systems operating properly for a period sufficient to stabilize emissions.

(2) The period sufficient to stabilize emissions may not exceed 12 hours.

(b) No maintenance, other than recommended lubrication and filter changes, may be performed during service accumulation without the Administrator's approval.

(c) Service accumulation is to be performed in a manner using good engineering judgment to ensure that emissions are representative of production engines.

(d) The manufacturer must maintain, and provide to the Administrator if requested, records stating the rationale for selecting a service accumulation period less than 12 hours and records describing the method used to accumulate hours on the test engine(s).

[60 FR 34598, July 3, 1995, as amended at 61 FR 20742, May 8, 1996]

§90.119 Certification procedure—testing.

(a) *Manufacturer testing.* The manufacturer must test the test engine using the specified test procedures and appropriate test cycle. All test results must be reported to the Administrator.

(1) The test procedure to be used is detailed in Subpart E of this part.

(i) Class I and II engines must use Test Cycle A described in Subpart E of this part, except that Class I and II engine families in which 100 percent of the engines sold operate only at rated speed may use Test Cycle B described in subpart E of this part.

(ii) Class III, IV, and V engines must use Test Cycle C described in subpart E of this part.

(2) Emission test equipment provisions are described in subpart D of this part.

(b) *Administrator testing.* (1) The Administrator may require that any one or more of the test engines be submitted to the Administrator, at such place or places as the Administrator may designate, for the purposes of conducting emission tests. The Administrator may specify that testing will be conducted at the manufacturer's facility, in which case instrumentation and equipment specified by the Administrator must be made available by the manufacturer for test operations. Any testing conducted at a manufacturer's facility must be scheduled by the manufacturer as promptly as possible.

(2)(i) Whenever the Administrator conducts a test on a test engine, the results of that test will, unless subsequently invalidated by the Administrator, comprise the official data for the engine and the manufacturer's data will not be used in determining compliance with emission standards.

(ii) Prior to the performance of such test, the Administrator may adjust or cause to be adjusted any adjustable parameter of the test engine which the Administrator has determined to be subject to adjustment for certification testing, to any setting within the physically adjustable range of that parameter, to determine whether such engine conforms to applicable emission standards.

(iii) For those engine parameters which the Administrator has not determined to be subject to adjustment for certification testing, the test engine presented to the Administrator for testing will be calibrated within the production tolerances applicable to the manufacturer specification shown on the engine label or in the owner's manual, as specified in the application for certification.

(c) *Use of carryover test data.* In lieu of testing, the manufacturer may submit, with the Administrator's approval, emission test data used to certify substantially similar engine families in previous years. This ''carryover'' test data is only allowable if the data shows the test engine would fully comply with the emission standards for the applicable class.

(d) *Scheduled maintenance during testing.* No scheduled maintenance may be performed during testing of the engine.

(e) *Unscheduled maintenance on test engines.*

(1) Manufacturers may not perform any unscheduled engine, emission control system, or fuel system adjustment, repair, removal, disassembly, cleaning, or replacement on a test engine without the advance approval of the Administrator.

(2) The Administrator may approve unscheduled maintenance if:

(i) A preliminary determination has been made that a part failure or system malfunction, or the repair of such failure or malfunction, does not render the engine unrepresentative of engines in use, and does not require direct access to the combustion chamber; and

(ii) A determination has been made that the need for maintenance or repairs is indicated by an overt malfunction such as persistent misfire, engine stall, overheating, fluid leakage, or loss of oil pressure.

(3) Emission measurements may not be used as a means of determining the need for unscheduled maintenance under paragraph (e)(2) of this section.

(4) The Administrator must have the opportunity to verify the extent of any overt indication of part failure (for example, misfire, stall), or an activation of an audible and/or visual signal, prior to the manufacturer performing any maintenance related to such overt indication or signal.

(5) Unless approved by the Administrator prior to use, engine manufacturers may not use any equipment, instruments, or tools to identify malfunctioning, maladjusted, or defective engine components unless the same or equivalent equipment, instruments, or tools are available at dealerships and

other service outlets and are used in conjunction with scheduled maintenance on such components.

(6) If the Administrator determines that part failure or system malfunction occurrence and/or repair rendered the engine unrepresentative of production engines, the engine cannot be used as a test engine.

(7) Unless waived by the Administrator, complete emission tests are required before and after any engine maintenance which may reasonably be expected to affect emissions.

(f) *Engine failure.* A manufacturer may not use as a test engine any engine which incurs major mechanical failure necessitating disassembly of the engine. This prohibition does not apply to failures which occur after completion of the service accumulation period.

§90.120 Certification procedure—use of special test procedures.

(a) *Use of special test procedures by EPA.* The Administrator may establish special test procedures for any engine that the Administrator determines is not susceptible to satisfactory testing under the specified test procedures set forth in subpart E of this part.

(b)(1) *Use of alternate test procedures by an engine manufacturer.* A manufacturer may elect to use an alternate test procedure provided that it yields results equal to the results from the specified test procedure in subpart E, its use is approved in advance by the Administrator, and the basis for equivalent results with the specified test procedure is fully described in the manufacturer's application.

(2) An engine manufacturer electing to use alternate test procedures is solely responsible for the results obtained. The Administrator may reject data generated under test procedures which do not correlate with data generated under the specified procedures.

§90.121 Certification procedure—recordkeeping.

(a) The engine manufacturer must maintain the following adequately organized records:

(1) Copies of all applications filed with the Administrator;

(2) A copy of all data obtained through the in-use testing program; and

(3) A detailed history of each test engine used for certification including the following:

(i) A description of the test engine's construction, including a general description of the origin and buildup of the engine, steps taken to insure that it is representative of production engines, description of components specially built for the test engine, and the origin and description of all emission-related components;

(ii) A description of the method used for engine service accumulation, including date(s) and the number of hours accumulated;

(iii) A description of all maintenance, including modifications, parts changes, and other servicing performed, and the date(s), and reason(s) for such maintenance;

(iv) A description of all emission tests performed including routine and standard test documentation, as specified in subpart E of this part, date(s), and the purpose of each test;

(v) A description of all tests performed to diagnose engine or emission control performance, giving the date and time of each and the reason(s) for the test; and

(vi) A description of any significant event(s) affecting the engine during the period covered by the history of the test engine but not described by an entry under one of the previous paragraphs of this section.

(b) Routine emission test data, such as those reporting test cell temperature and relative humidity at start and finish of test and raw emission results from each mode or test phase, must be retained for a period of one year after issuance of all certificates of conformity to which they relate. All other information specified in paragraph (a) of this section must be retained for a period of eight years after issuance of all certificates of conformity to which they relate.

(c) Records may be kept in any format and on any media, provided that, at the Administrator's request, organized, written records in English are promptly supplied by the manufacturer.

(d) The manufacturer must supply, at the Administrator's request, copies of any engine maintenance instructions or explanations issued by the manufacturer.

§ 90.122 Amending the application and certificate of conformity.

(a) The engine manufacturer must notify the Administrator when either an engine is to be added to a certificate of conformity or changes are to be made to a product line covered by a certificate of conformity. Notification occurs when the manufacturer submits an amendment to the original application prior to either producing such engines or making such changes to a product line.

(b) The amendment must request that the engine manufacturer's existing certificate of conformity be amended and include the following information:

(1) A full description of the engine to be added or the change(s) to be made in production;

(2) The manufacturer's proposed test engine selection(s); and

(3) Engineering evaluations or reasons why the original test engine is or is not still appropriate.

(c) The Administrator may require the engine manufacturer to perform tests on an engine representing the engine to be added or changed.

(d) *Decision by Administrator.* (1) Based on the submitted amendment and data derived from such testing as the Administrator may require or conduct, the Administrator must determine whether the proposed addition or change would still be covered by the certificate of conformity then in effect.

(2) If the Administrator determines that the new or changed engine(s) meets the requirements of this subpart and the Act, the appropriate certificate of conformity will be amended.

(3) If the Administrator determines that the proposed amendment would not be covered by the certificate of conformity, the Administrator must provide a written explanation to the engine manufacturer of his or her decision not to amend the certificate. The manufacturer may request a hearing on a denial.

(e)(1) Alternatively, an engine manufacturer may make changes in or additions to production engines concurrently with amending the application as set forth in paragraph (b) of this section, if the manufacturer determines that all affected engines will still meet applicable emission standards. The engine manufacturer must supply supporting documentation, test data, and engineering evaluations as appropriate to support its determination.

(2) If, after a review, the Administrator determines additional testing is required, the engine manufacturer must provide required test data within 30 days or cease production of the affected engines.

(3) If the Administrator determines that the affected engines do not meet applicable requirements, the Administrator will notify the engine manufacturer to cease production of the affected engines.

§ 90.123 Denial, revocation of certificate of conformity.

(a) If, after review of the engine manufacturer's application, request for certification, information obtained from any inspection, and any other information the Administrator may require, the Administrator determines that the test engine does not meet applicable standards and requirements, the Administrator will notify the manufacturer in writing, setting forth the basis for this determination.

(b) Notwithstanding the fact that engines described in the application may comply with all other requirements of this subpart, the Administrator may deny the issuance of or revoke a previously issued certificate of conformity if the Administrator finds any one of the following infractions to be substantial:

(1) The engine manufacturer submits false or incomplete information;

(2) The engine manufacturer denies an EPA enforcement officer or EPA authorized representative the opportunity to conduct authorized inspections;

(3) The engine manufacturer fails to supply requested information or amend its application to include all engines being produced;

(4) The engine manufacturer renders inaccurate any test data which it submits or otherwise circumvents the intent of the Act or this part; or

(5) The engine manufacturer denies an EPA enforcement officer or EPA authorized representative reasonable assistance (as defined in §90.506).

(c) If a manufacturer knowingly commits an infraction specified in paragraph (b)(1) or (b)(4) of this section or knowingly commits any fraudulent act which results in the issuance of a certificate of conformity, the Administrator may deem such certificate void ab initio.

(d) When the Administrator denies or revokes a certificate of conformity, the engine manufacturer will be provided a written determination. The manufacturer may request a hearing on the Administrator's decision.

(e) Any revocation of a certificate of conformity extends no further than to forbid the introduction into commerce of those engines previously covered by the certification which are still in the possession of the engine manufacturer, except in cases of such fraud or other misconduct that makes the certification void ab initio.

§90.124 Request for hearing.

(a) An engine manufacturer may request a hearing on the Administrator's denial or revocation of a certificate of conformity.

(b) The engine manufacturer's request must be filed within 30 days of the Administrator's decision, be in writing, and set forth the manufacturer's objections to the Administrator's decision and data to support the objections.

(c) If, after review of the request and supporting data, the Administrator finds that the request raises a substantial and factual issue, the Administrator will provide the engine manufacturer a hearing.

§90.125 Hearing procedures.

The hearing procedures set forth in §§90.513, 90.514, and 90.515 apply to this subpart.

§90.126 Right of entry and access.

Any engine manufacturer that has applied for certification of a new engine or engine family subject to certification testing under this subpart must admit or cause to be admitted to any applicable facilities during operating hours any EPA enforcement officer or EPA authorized representative as provided in §90.506.

Subpart C [Reserved]

Subpart D—Emission Test Equipment Provisions

§90.301 Applicability.

(a) This subpart describes the equipment required in order to perform exhaust emission tests on new nonroad spark-ignition engines and vehicles subject to the provisions of subpart A of part 90.

(b) Exhaust gases, either raw or dilute, are sampled while the test engine is operated using a steady state test cycle on an engine dynamometer. The exhaust gases receive specific component analysis determining concentration of pollutant. Emission concentrations are converted to mass emission rates in grams per hour based on either fuel flow, fuel flow and engine intake air flow, or exhaust volume flow. Weighted emission rates are reported as grams per brake-kilowatt hour (g/kW-hr). See subpart E of this part for a complete description of the test procedure.

(c) Additional information about system design, calibration methodologies, and so forth, for raw gas sampling can be found in part 86, subpart D of this chapter. Examples for system design, calibration methodologies, and so forth, for dilute exhaust gas sampling can be found in part 86, subpart N of this chapter.

§90.302 Definitions.

The definitions in §90.3 apply to this subpart. The following definitions also apply to this subpart.

Rated speed means the speed at which the manufacturer specifies the maximum rated power of an engine.

Intermediate speed means the engine speed which is 85 percent of the rated speed.

§ 90.303 Symbols, acronyms, abbreviations.

(a) The acronyms and abbreviations in § 90.5 apply to this subpart.

(b) The symbols in Table 1 in Appendix A of this subpart apply to this subpart.

§ 90.304 Test equipment overview.

(a) All engines subject to this subpart are tested for exhaust emissions. Engines are operated on dynamometers meeting the specification given in § 90.305.

(b) The exhaust is tested for gaseous emissions using a raw gas sampling system as described in § 90.414 or a constant volume sampling (CVS) system as described in § 90.421. Both systems require analyzers (see paragraph (c) of this section) specific to the pollutant being measured.

(c) Analyzers used are a non-dispersive infrared (NDIR) absorption type for carbon monoxide and carbon dioxide analysis; paramagnetic (PMD), zirconia (ZRDO), or electrochemical type (ECS) for oxygen analysis; a flame ionization (FID) or heated flame ionization (HFID) type for hydrocarbon analysis; and a chemiluminescent detector (CLD) or heated chemiluminescent detector (HCLD) for oxides of nitrogen analysis.

§ 90.305 Dynamometer specifications and calibration accuracy.

(a) *Dynamometer specifications.* The dynamometer test stand and other instruments for measurement of speed and power output must meet the engine speed and torque accuracy requirements shown in Table 2 in Appendix A of this subpart. The dynamometer must be capable of performing the test cycle described in § 90.410.

(b) *Dynamometer calibration accuracy.* (1) The dynamometer test stand and other instruments for measurement of power output must meet the calibration frequency shown in Table 2 in Appendix A of this subpart.

(2) A minimum of three calibration weights for each range used is required. The weights must be equally spaced and traceable to within 0.5 percent of National Institute for Standards and Testing (NIST) weights. Laboratories located in foreign countries may certify calibration weights to local government bureau standards.

§ 90.306 Dynamometer torque cell calibration.

(a)(1) Any lever arm used to convert a weight or a force through a distance into a torque must be used in a horizontal position for horizontal shaft dynamometers (± five degrees). For vertical shaft dynamometers, a pulley system may be used to convert the dynamometer's horizontal loading into the vertical plane.

(2) Calculate the indicated torque (IT) for each calibration weight to be used by:

IT=Moment Arm (meters) × Calibration Weight (Newtons)

(3) Attach each calibration weight specified in § 90.305(b)(2) to the moment arm at the calibration distance determined in paragraph (a)(2) of this section. Record the power measurement equipment response (N–m) to each weight.

(4) Compare the torque value measured to the calculated torque.

(5) The measured torque must be within two percent of the calculated torque.

(6) If the measured torque is not within two percent of the calculated torque, adjust or repair the system. Repeat steps in paragraphs (a)(1) through (a)(6) of this section with the adjusted or repaired system.

(b) Option. A master load-cell or transfer standard may be used to verify the torque measurement system.

(1) The master load-cell and read out system must be calibrated using weights specified in § 90.305(b)(2).

(2) Attach the master load-cell and loading system.

(3) Load the dynamometer to a minimum of three equally spaced torque values as indicated by the master load-cell for each in-use range used.

(4) The in-use torque measurement must be within two percent of the torque measured by the master system for each load used.

(5) If the in-use torque is not within two percent of the master torque, adjust or repair the system. Repeat steps in paragraphs (b)(2) through (b)(4) of this section with the adjusted or repaired system.

(c) Calibrated resistors may not be used for engine flywheel torque transducer calibration, but may be used to span the transducer prior to engine testing.

(d) Other engine dynamometer system calibrations such as speed are performed as specified by the dynamometer manufacturer or as dictated by good engineering practice.

§90.307 Engine cooling system.

An engine cooling system is required with sufficient capacity to maintain the engine at normal operating temperatures as prescribed by the engine manufacturer. Auxiliary fan(s) may be used to maintain sufficient engine cooling during engine dynamometer operation.

§90.308 Lubricating oil and test fuels.

(a) *Lubricating oil.* Use the engine lubricating oil which meets the engine manufacturer's specifications for a particular engine and intended usage.

(1) Manufacturers must use engine lubricants representative of commercially available engine lubricants.

(2) For 2-stroke engines, the fuel/oil mixture ratio must be that which is recommended by the manufacturer.

(b) *Test Fuels—Certification.* (1) The manufacturer must use gasoline having the specifications, or substantially equivalent specifications approved by the Administrator, as specified in Table 3 in Appendix A of this subpart for exhaust emission testing of gasoline fueled engines. As an option, manufacturers may use the fuel specified in §86.1313–94(a) of this chapter for gasoline fueled engines.

(2) Alternative fuels, such as natural gas, propane, and methanol, used for exhaust emission testing and service accumulation of alternative fuel spark-ignition engines must be representative of commercially available alternative fuels.

(i) The manufacturer shall recommend the alternative fuel to be used for certification testing and engine service accumulation in accordance with paragraph (b)(3) of this section.

(ii) The Administrator shall determine the alternative fuel to be used for testing and engine service accumulation, taking into consideration the alternative fuel recommended by the manufacturer.

(3) Other fuels may be used for testing provided:

(i) They are commercially viable;

(ii) Information acceptable to the Administrator is provided to show that only the designated fuel would be used in customer service; and

(iii) Fuel specifications are approved in writing by the Administrator prior to the start of testing.

(c) *Test Fuels—Service Accumulation.* Unleaded gasoline representative of commercial gasoline generally available through retail outlets must be used in service accumulation for gasoline-fueled spark-ignition engines. As an alternative, the certification test fuels specified under paragraph (b) of this section may be used for engine service accumulation. Leaded fuel may not be used during service accumulation. Additional fuel requirements for service accumulation are as follows:

§90.309 Engine intake air temperature measurement.

(a) The measurement location must be within 10 cm of the engine intake system (i.e., the air cleaner, for most engines.)

(b) The temperature measurements must be accurate to within ± 2 °C.

§90.310 Engine intake air humidity measurement.

This section refers to engines which are supplied with intake air other than the ambient air in the test cell (i.e., air which has been pumped directly to the engine air intake system). For engines which use ambient test cell air for the engine intake air, the ambient test cell humidity measurement may be used.

(a) *Humidity conditioned air supply.* Air that has had its absolute humidity altered is considered humidity-conditioned air. For this type of intake air supply, the humidity measurements must be made within the intake air supply system and after the humidity conditioning has taken place.

(b) *Unconditioned air supply.* Humidity measurements in unconditioned intake air supply systems must be made in the intake air stream entering the

supply system. Alternatively, the humidity measurements can be measured within the intake air supply stream.

§ 90.311 Test conditions.

(a) *General requirements.* (1) Ambient temperature levels encountered by the test engine throughout the test sequence may not be less than 20 °C or more than 30 °C. All engines must be installed on the test bed at their design installation angle to prevent abnormal fuel distribution.

(2) Calculate all volumes and volumetric flow rates at standard conditions for temperature and pressure, and use these conditions consistently throughout all calculations. Standard conditions for temperature and pressure are 25 °C and 101.3 kPa.

(b) *Engine test conditions.* Measure the absolute temperature (designated as T and expressed in Kelvin) of the engine air at the inlet to the engine and the dry atmospheric pressure (designated as p_s and expressed in kPa), and determine the parameter f according to the following provisions for naturally aspirated engines:

$$f = \frac{99}{p_s} \times \left(\frac{T}{298}\right)^{0.7}$$

For a certification test to be recognized as valid, the parameter f shall be between the limits as shown below: $0.96<f<1.04$

§ 90.312 Analytical gases.

(a) The shelf life of a calibration gas may not be exceeded. The expiration date stated by the gas supplier must be recorded.

(b) *Pure gases.* The required purity of the gases is defined by the contamination limits specified in this subsection. The following gases must be available for operation:

(1) Purified nitrogen, also refered to as ''zero-grade nitrogen'' (Contamination ≤ 1 ppm C, ≤ 1 ppm CO, ≤ 400 ppm CO_2, ≤ 0.1 ppm NO);

(2) Purified oxygen (Purity 99.5 percent vol O_2);

(3) Hydrogen-helium mixture (40 ± 2 percent hydrogen, balance helium) (Contamination ≤ 1 ppm C, ≤ 400 ppm CO);

(4) Purified synthetic air, also refered to as ''zero air'' or ''zero gas'' (Contamination ≤ 1 ppm C, ≤ 1 ppm CO, ≤ 400 ppm CO_2, ≤ 0.1 ppm NO) (Oxygen content between 18–21 percent vol.).

(c) *Calibration and span gases.* (1) Calibration gas values are to be derived from NIST ''Standard Reference Materials'' (SRM's) and are to be single blends as specified in this subsection.

(2) Mixtures of gases having the following chemical compositions must be available:

C_3H_8 and purified synthetic air and/or C_3H_8 and purified nitrogen;
CO and purified nitrogen;
NO_X and purified nitrogen (the amount of NO_2 contained in this calibration gas must not exceed five percent of the NO content);
CO_2 and purified nitrogen.

NOTE: For the HFID or FID the manufacturer may choose to use as a diluent span gas and the calibration gas either purified synthetic air or purified nitrogen. Any mixture of C_3H_8 and purified synthetic air which contains a concentration of propane higher than what a gas supplier considers to be safe may be substituted with a mixture of C_3H_8 and purified nitrogen. However, the manufacturer must be consistent in the choice of diluent (zero air or purified nitrogen) between the calibration and span gases. If a manufacturer chooses to use C_3H_8 and purified nitrogen for the calibration gases, then purified nitrogen must be the diluent for the span gases.

(3) The true concentration of a span gas must be within ± two percent of the NIST gas standard. The true concentration of a calibration gas must be within ± one percent of the NIST gas standard. The use of precision blending devices (gas dividers) to obtain the required calibration gas concentrations is acceptable. Give all concentrations of calibration gas on a volume basis (volume percent or volume ppm).

(4) The gas concentrations used for calibration and span may also be obtained by means of a gas divider, diluting either with purified N_2 or with purified synthetic air. The accuracy of the mixing device must be such that the concentration of the diluted gases may be determined to within ± two percent.

(d) Oxygen interference check gases must contain propane with 350 ppmC ± 75 ppmC hydrocarbon. Determine the

concentration value to calibration gas tolerances by chromatographic analysis of total hydrocarbons plus impurities or by dynamic blending. For gasoline fueled engines, oxygen contentration must be between 0 and 1 percent O_2. Nitrogen must be the predominant diluent with the balance oxygen.

(e) Fuel for the hydrocarbon flame ionization detector (HC-FID) must be a blend of 40 ± two percent hydrogen with the balance being helium. The mixture must contain less than one ppm equivalent carbon response; 98 to 100 percent hydrogen fuel may be used with advance approval of the Administrator.

(f) *Hydrocarbon analyzer burner air.* The concentration of oxygen must be within one mole percent of the oxygen concentration of the burner air used in the latest oxygen interference check (percent O_2I), see § 90.316(d). If the difference in oxygen concentration is greater than one mole percent, then the oxygen interference must be checked and, if necessary, the analyzer adjusted to meet the percent O_2I requirements. The burner air must contain less than two ppmC hydrocarbon.

§ 90.313 Analyzers required.

(a) *Analyzers.* Analyze measured gases with the following instruments:

(1) *Carbon monoxide (CO) analysis.* (i) The carbon monoxide analyzer shall be of the non-dispersive infrared (NDIR) absorption type.

(ii) The use of linearizing circuits is permitted.

(2) *Carbon dioxide (CO_2)* analysis. (i) The carbon dioxide analyzer shall be of the non-dispersive infrared (NDIR) absorption type.

(ii) The use of linearizing circuits is permitted.

(3) *Oxygen (O_2)* analysis. Oxygen (O_2) analyzers may be of the paramagnetic (PMD), zirconia (ZRDO) or electrochemical type (ECS).

(4) *Hydrocarbon (HC) analysis.* (i) For Raw Gas Sampling, the hydrocarbon analyzer shall be of the heated flame ionization (HFID) type. For constant volume sampling, the hydrocarbon analyzer may be of the flame ionization (FID) type or of the heated flame ionization (HFID) type.

(ii) For the HFID system, if the temperature of the exhaust gas at the sample probe is below 190° C, the temperature of the valves, pipe work, and so forth, must be controlled so as to maintain a wall temperature of 190° C ±11° C. If the temperature of the exhaust gas at the sample probe is above 190° C, the temperature of the valves, pipe work, and so forth, must be controlled so as to maintain a wall temperature greater than 180° C.

(iii) For the HFID analyzer, the detector, oven, and sample-handling components within the oven must be suitable for continuous operation at temperatures to 200 °C. It must by capable of maintaining temperature within ±5.5 °C of the set point.

(iv) Fuel and burner air must conform to the specifications in § 90.312.

(v) The percent of oxygen interference must be less than three percent, as specified in § 90.316(d).

(5) *Oxides of nitrogen (NO_X)* analysis.

(i) This analysis device consists of the following items:

(A) A NO_2 to NO converter. The NO_2 to NO converter efficiency must be at least 90 percent.

(B) An ice bath located after the NO_X converter (optional).

(C) A chemiluminescent detector (CLD) or heated chemiluminescent detector (HCLD).

(ii) The quench interference must be less than 3.0 percent as measured in § 90.325.

(b) *Other analyzers and equipment.* Other types of analyzers and equipment may be used if shown to yield equivalent results and if approved in advance by the Administrator.

(c) The following requirements must be incorporated as indicated in systems used for testing under this subpart.

(1) Carbon monoxide and carbon dioxide measurements must be made on a dry basis (for raw exhaust measurement only). Specific requirements for the means of drying the sample can be found in § 90.313(e).

(2) Calibration or span gases for the NO_X measurement system must pass through the NO_2 to NO converter.

(d) The electromagnetic compatibility (EMC) of the equipment must be on a level as to minimize additional errors.

(e) *Gas drying.* Chemical dryers are not an acceptable method of removing water from the sample. Water removal by condensation is acceptable. If water is removed by condensation, the sample gas temperature or sample dew point must be monitored either within the water trap or downstream and its temperature must not exceed 7° C. A water trap performing this function is an acceptable method. Means other than condensation may be used only with prior approval from the Administrator.

§ 90.314 Analyzer accuracy and specifications.

(a) *Measurement and accuracy—general.* The analyzers must have a measuring range which allows them to measure the concentrations of the exhaust gas sample pollutants with the accuracies shown in Table 2 in Appendix A of this subpart.

(1) *Precision.* The precision of the analyzer must be, at worst, two percent of full-scale concentration for each range used. The precision is defined as 2.5 times the standard deviation(s) of 10 repetitive responses to a given calibration or span gas.

(2) *Noise.* The analyzer peak-to-peak response to zero and calibration or span gases over any 10-second period must not exceed two percent of full-scale chart deflection on all ranges used.

(3) *Zero drift.* The analyzer zero-response drift during a one-hour period must be less than two percent of full-scale chart deflection on the lowest range used. The zero-response is defined as the mean response including noise to a zero-gas during a 30-second time interval.

(4) *Span drift.* The analyzer span drift during a one-hour period must be less than two percent of full-scale chart deflection on the lowest range used. The analyzer span is defined as the difference between the span-response and the zero-response. The span-response is defined as the mean response including noise to a span gas during a 30-second time interval.

(b) *Operating procedure for analyzers and sampling system.* Follow the start-up and operating instructions of the instrument manufacturer or use good engineering practice. Adhere to the minimum requirements given in §§ 90.316 through 90.325 and § 90.409.

(c) *Emission measurement accuracy—Bag sampling.* (1) Good engineering practice dictates that exhaust emission sample analyzer readings below 15 percent of full-scale chart deflection should generally not be used.

(2) Some high resolution read-out systems, such as computers, data loggers, and so forth, can provide sufficient accuracy and resolution below 15 percent of full scale. Such systems may be used provided that additional calibrations are made to ensure the accuracy of the calibration curves. The following procedure for calibration below 15 percent of full scale may be used:

NOTE TO PARAGRAPH (c): If a gas divider is used, the gas divider must conform to the accuracy requirements as follows. The use of precision blending devices (gas dividers) to obtain the required calibration gas concentrations is acceptable, provided that the blended gases are accurate to within ± 1.5 percent of NIST gas standards or other gas standards which have been approved by the Administrator. This accuracy implies that primary gases used for blending must be ''named'' to an accuracy of at least ± one percent, traceable to NIST or other approved gas standards.

(i) Span the full analyzer range using a top range calibration gas. The span gases must be accurate to within ± two percent of NIST gas standards or other gas standards which have been approved by the Administrator.

(ii) Generate a calibration curve according to, and meeting the requirements, of the sections describing analyzer calibrations which are found in §§ 90.316, 90.317, 90.318, and 90.320.

(iii) Select a calibration gas (a span gas may be used for calibrating the CO_2 analyzer) with a concentration between the two lowest non-zero gas divider increments. This gas must be ''named'' to an accuracy of ± one percent of NIST gas standards or other standards approved by the Administrator.

(iv) Using the calibration curve fitted to the points generated in paragraphs (c)(2) (i) and (ii) of this section, check the concentration of the gas selected in paragraph (c)(2)(iii) of this section. The concentration derived from the curve

must be within ± 2.3 percent (± 2.8 percent for CO_2 span gas) of the gas's original named concentration.

(v) Provided the requirements of paragraph (c)(2)(iv) of this section are met, use the gas divider with the gas selected in paragraph (c)(2)(iii) of this section and determine the remainder of the calibration points. Fit a calibration curve per §§90.316, 90.317, 90.318, and 90.320 of this chapter for the entire analyzer range.

(d) *Emission measurement accuracy—continuous sampling.* Analyzers used for continuous analysis must be operated such that the measured concentration falls between 15 and 100 percent of full-scale chart deflection. Exceptions to these limits are:

(1) The analyzer's response may be less than 15 percent or more than 100 percent of full scale if automatic range change circuitry is used and the limits for range changes are between 15 and 100 percent of full-scale chart deflection;

(2) The analyzer's response may be less than 15 percent of full scale if:

(i) The alternative in paragraph (c)(2) of this section is used to ensure that the accuracy of the calibration curve is maintained below 15 percent; or

(ii) The full-scale value of the range is 155 ppm (C) or less; or

(iii) The emissions from the engine are erratic and the integrated chart deflection value for the cycle is greater than 15 percent of full scale; or

(iv) The contribution of all data read below the 15 percent level is less than 10 percent by mass of the final test results.

§90.315 Analyzer initial calibration.

(a) *Warming-up time.* The warming-up time should be according to the recommendations of the manufacturer. If not specified, a minimum of two hours should be allowed for warming up the analyzers.

(b) *NDIR, FID, and HFID analyzer.* Tune and maintain the NDIR analyzer per the instrument manufacturer recommendations or specifications or using good engineering practice. The combustion flame of the FID or HFID analyzer must be optimized in order to meet the specifications in §90.316(b).

(c) *Zero setting and calibration.* Using purified synthetic air (or nitrogen), set the CO, CO_2, NO_X, and HC analyzers at zero. Connect the appropriate calibrating gases to the analyzers and record the values. Use the same gas flow rates and pressure as when sampling exhaust.

(d) *Rechecking of zero setting.* Recheck the zero setting and, if necessary, repeat the procedure described in paragraph (c) of this section.

§90.316 Hydrocarbon analyzer calibration.

(a) Calibrate the FID and HFID hydrocarbon analyzer as described in this section. Operate the HFID to a set point ± 5.5 °C between 185 and 197 °C.

(b) *Initial and periodic optimization of detector response.* Prior to initial use and at least annually thereafter, adjust the FID and HFID hydrocarbon analyzer for optimum hydrocarbon response as specified in this paragraph. Alternative methods yielding equivalent results may be used, if approved in advance by the Administrator.

(1) Follow good engineering practices for initial instrument start-up and basic operating adjustment using the appropriate fuel (see §90.312) and purified synthetic air or zero-grade nitrogen.

(2) Use of one of the following procedures is required for FID or HFID optimization:

(i) The procedure outlined in Society of Automotive Engineers (SAE) paper No. 770141, ''Optimization of a Flame Ionization Detector for Determination of Hydrocarbon in Diluted Automotive Exhausts;'' author, Glenn D. Reschke. This procedure has been incorporated by reference. See §90.7.

(ii) The HFID optimization procedures outlined in §86.331–79 of this chapter.

(iii) Alternative procedures may be used if approved in advance by the Administrator.

(3) After the optimum flow rates have been determined, record them for future reference.

(c) *Initial and periodic calibration.* Prior to initial use and monthly thereafter, or within one month prior to the certification test, the FID or HFID hydrocarbon analyzer must be calibrated

on all normally used instrument ranges using the steps in this paragraph. Use the same flow rate and pressures as when analyzing samples. Introduce calibration gases directly at the analyzer. An optional method for dilute sampling described in § 86.1310–90(b)(3)(i) may be used.

(1) Adjust analyzer to optimize performance.

(2) Zero the hydrocarbon analyzer with purified synthetic air or zero-grade nitrogen.

(3) Calibrate on each used operating range with calibration gases having nominal concentrations between 10 and 90 percent of that range. A minimum of six evenly spaced points covering at least 80 percent of the 10 to 90 range (64 percent) is required (see following table).

Example calibration points (%)	Acceptable for calibration?
20, 30, 40, 50, 60, 70	No, range covered is 50 percent, not 64.
20, 30, 40, 50, 60, 70, 80, 90	Yes.
10, 25, 40, 55, 70, 85	Yes.
10, 30, 50, 70, 90	No, though equally spaced and entire range covered, a minimum of six points are needed.

For each range calibrated, if the deviation from a least-squares best-fit straight line is two percent or less of the value at each data point, calculate concentration values by use of a single calibration factor for that range. If the deviation exceeds two percent at any point, use the best-fit non-linear equation which represents the data to within two percent of each test point to determine concentration.

(d) *Oxygen interference optimization.* Prior to initial use and monthly thereafter, perform the oxygen interference optimization as described in this paragraph. Choose a range where the oxygen interference check gases will fall in the upper 50 percent. Conduct the test, as outlined in this paragraph, with the oven temperature set as required by the instrument manufacturer. Oxygen interference check gas specifications are found in § 90.312(d).

(1) Zero the analyzer.

(2) Span the analyzer with the 21 percent oxygen blend.

(3) Recheck zero response. If it has changed more than 0.5 percent of full scale repeat paragraphs (d)(1) and (d)(2) of this section to correct the problem.

(4) Introduce the five percent and 10 percent oxygen interference check gases.

(5) Recheck the zero response. If it has changed by more than ± one percent of full scale, repeat the test.

(6) Calculate the percent of oxygen interference (designated as percent O_2I) for each mixture in paragraph (d)(4) of this section according to the following equation.

$$\text{Percent } O_2I = \frac{B - \text{Analyzer response (ppmC)}}{B}\ (100)$$

$$\text{Analyzer response} = \left(\frac{A}{\text{\% of full-scale analyzer response due to A}}\right) \times (\text{\% of full-scale analyzer response due to B})$$

Where:

A = hydrocarbon concentration (ppmC) of the span gas used in paragraph (d)(2) of this section.

B = hydrocarbon concentration (ppmC) of the oxygen interference check gases used in paragraph (d)(4) of this section.

(7) The percent of oxygen interference (designated as percent O_2I) must be less than ± three percent for all required oxygen interference check gases prior to testing.

(8) If the oxygen interference is greater than the specifications, incrementally adjust the air flow above and below the manufacturer's specifications, repeating paragraphs (d)(1) through (d)(7) of this section for each flow.

(9) If the oxygen interference is greater than the specification after adjusting the air flow, vary the fuel flow and thereafter the sample flow, repeating paragraphs (d)(1) through (d)(7) of this section for each new setting.

(10) If the oxygen interference is still greater than the specifications, repair or replace the analyzer, FID fuel, or burner air prior to testing. Repeat this section with the repaired or replaced equipment or gases.

§90.317 Carbon monoxide analyzer calibration.

(a) Calibrate the NDIR carbon monoxide analyzer as described in this section.

(b) *Initial and periodic interference.* Prior to its initial use and annually thereafter, check the NDIR carbon monoxide analyzer for response to water vapor and CO_2:

(1) Follow good engineering practices for instrument start-up and operation. Adjust the analyzer to optimize performance on the most sensitive range to be used.

(2) Zero the carbon monoxide analyzer with either purified synthetic air or zero-grade nitrogen.

(3) Bubble a mixture of three percent CO_2 in N_2 through water at room temperature and record analyzer response.

(4) An analyzer response of more than one percent of full scale for ranges above 300 ppm full scale or more than three ppm on ranges below 300 ppm full scale requires corrective action. (Use of conditioning columns is one form of corrective action which may be taken.)

(c) *Initial and periodic calibration.* Prior to its initial use and monthly thereafter, or within one month prior to the certification test, calibrate the NDIR carbon monoxide analyzer.

(1) Adjust the analyzer to optimize performance.

(2) Zero the carbon monoxide analyzer with either purified synthetic air or zero-grade nitrogen.

(3) Calibrate on each used operating range with carbon monoxide-in-N_2 calibration gases having nominal concentrations between 10 and 90 percent of that range. A minimum of six evenly spaced points covering at least 80 percent of the 10 to 90 range (64 percent) is required (see following table).

Example calibration points (%)	Acceptable for calibration?
20, 30, 40, 50, 60, 70	No, range covered is 50 percent, not 64.
20, 30, 40, 50, 60, 70, 80, 90	Yes.
10, 25, 40, 55, 70, 85	Yes.
10, 30, 50, 70, 90	No, though equally spaced and entire range covered, a minimum of six points are needed.

Additional calibration points may be generated. For each range calibrated, if the deviation from a least-squares best-fit straight line is two percent or less of the value at each data point, calculate concentration values by use of a single calibration factor for that range. If the deviation exceeds two percent at any point, use the best-fit non-linear equation which represents the data to within two percent of each test point to determine concentration.

§90.318 Oxides of nitrogen analyzer calibration.

(a) Calibrate the chemiluminescent oxides of nitrogen analyzer as described in this section.

(b) *Initial and Periodic Interference*: Prior to its initial use and monthly

thereafter, or within one month prior to the certification test, check the chemiluminescent oxides of nitrogen analyzer for NO_2 to NO converter efficiency. Figure 1 in Appendix B of this subpart is a reference for paragraphs (b)(1) through (11) of this section:

(1) Follow good engineering practices for instrument start-up and operation. Adjust the analyzer to optimize performance.

(2) Zero the oxides of nitrogen analyzer with purified synthetic air or zero-grade nitrogen.

(3) Connect the outlet of the NO_X generator to the sample inlet of the oxides of nitrogen analyzer which has been set to the most common operating range.

(4) Introduce into the NO_X generator analyzer-system an NO-in-nitrogen (N_2) mixture with an NO concentration equal to approximately 80 percent of the most common operating range. The NO_2 content of the gas mixture must be less than five percent of the NO concentration.

(5) With the oxides of nitrogen analyzer in the NO mode, record the concentration of NO indicated by the analyzer.

(6) Turn on the NO_X generator O_2 (or air) supply and adjust the O_2 (or air) flow rate so that the NO indicated by the analyzer is about 10 percent less than indicated in paragraph (b)(5) of this section. Record the concentration of NO in this NO+O_2 mixture as value ''c.''

(7) Switch the NO_X generator to the generation mode and adjust the generation rate so that the NO measured on the analyzer is 20 percent of that measured in paragraph (b)(5) of this section. There must be at least 10 percent unreacted NO at this point. Record the concentration of residual NO as value ''d.''

(8) Switch the oxides of nitrogen analyzer to the NO_X mode and measure total NO_X. Record this value as ''a.''

(9) Switch off the NO_X generator but maintain gas flow through the system. The oxides of nitrogen analyzer will indicate the NO_X in the NO+O_2 mixture. Record this value as ''b''.

(10) Turn off the NO_X generator O_2 (or air) supply. The analyzer will now indicate the NO_X in the original NO-in-N_2 mixture. This value should be no more than five percent above the value indicated in paragraph (b)(4) of this section.

(11) Calculate the efficiency of the NO_X converter by substituting the concentrations obtained into the following equation:

$$\text{percent efficiency} = \left(1 + \frac{a-b}{c-d}\right) \times 100$$

Where:

a = concentration obtained in paragraph (b)(8),

b = concentration obtained in paragraph (b)(9),

c = concentration obtained in paragraph (b)(6),

d = concentration obtained in paragraph (b)(7).

If converter efficiency is less than 90 percent, corrective action will be required.

(c) *Initial and periodic calibration.* Prior to its initial use and monthly thereafter, or within one month prior to the certification test, calibrate the chemiluminescent oxides of nitrogen analyzer on all normally used instrument ranges. Use the same flow rate as when analyzing samples. Proceed as follows:

(1) Adjust analyzer to optimize performance.

(2) Zero the oxides of nitrogen analyzer with purified synthetic air or zero-grade nitrogen.

(3) Calibrate on each normally used operating range with NO-in-N_2 calibration gases having nominal concentrations between 10 and 90 percent of that range. A minimum of six evenly spaced points covering at least 80 percent of the 10 to 90 range (64 percent) is required (see following table).

Example calibration points (%)	Acceptable for calibration?
20, 30, 40, 50, 60, 70	No, range covered is 50 percent, not 64
20, 30, 40, 50, 60, 70, 80, 90	Yes.
10, 25, 40, 55, 70, 85	Yes.

Example calibration points (%)	Acceptable for calibration?
10, 30, 50, 70, 90	No, though equally spaced and entire range covered, a minimum of six points are needed.

Additional calibration points may be generated. For each range calibrated, if the deviation from a least-squares best-fit straight line is two percent or less of the value at each data point, calculate concentration values by use of a single calibration factor for that range. If the deviation exceeds two percent at any point, use the best-fit non-linear equation which represents the data to within two percent of each test point to determine concentration.

(d) The initial and periodic interference, system check, and calibration test procedures specified in §86.332–79 of this chapter may be used in lieu of the procedures specified in this section.

§90.319 NO_X converter check.

(a) The efficiency of the converter used for the conversion of NO_2 to NO is tested as given in paragraphs (a)(1) through (a)(8) of this section.

(1) Using the test setup as shown in Figure 1 in Appendix B of this subpart (see also §90.318 of this chapter) and the procedure described in paragraphs (a)(2) through (a)(8) of this section, test the efficiency of converters by means of an ozonator.

(2) Calibrate the HCLD or CLD in the most common operating range following the manufacturer's specifications using zero and span gas (the NO content of which must amount to about 80 percent of the operating range and the NO_2 concentration of the gas mixture less than five percent of the NO concentration). The NO_X analyzer must be in the NO mode so that the span gas does not pass through the converter. Record the indicated concentration.

(3) Calculate the efficiency of the NO_X converter as described in §90.318(b).

(4) Via a T-fitting, add oxygen continuously to the gas flow until the concentration indicated is about 20 percent less than the indicated calibration concentration given in paragraph (a)(2) of this section. Record the indicated concentration ''c.'' The ozonator is kept deactivated throughout the process.

(5) Activate the ozonator to generate enough ozone to bring the NO concentration down to about 20 percent (minimum 10 percent) of the calibration concentration given in paragraph (a)(2) of this section. Record the indicated concentration ''d.''

NOTE: If, with the analyzer in the most common range, the NO_X converter can not give a reduction from 80 percent to 20 percent, then use the highest range which will give the reduction.

(6) Switch the NO analyzer to the NO_X mode which means that the gas mixture (consisting of NO, NO_2, O_2 and N_2) now passes through the converter. Record the indicated concentration ''a.''

(7) Deactivate the ozonator. The mixture of gases described in paragraph (a)(6) of this section passes through the converter into the detector. Record the indicated concentration ''b.''

(8) Switched to NO mode with the ozonator deactivated, the flow of oxygen or purified synthetic air is also shut off. The NO_X reading of the analyzer may not deviate by more than ± five percent of the theoretical value of the figure given in paragraph (a)(2) of this section.

(b) The efficiency of the converter must be tested prior to each calibration of the NO_X analyzer.

(c) The efficiency of the converter may not be less than 90 percent.

§90.320 Carbon dioxide analyzer calibration.

(a) Prior to its initial use and monthly thereafter, or within one month prior to the certification test, calibrate the NDIR carbon dioxide analyzer as follows:

(1) Follow good engineering practices for instrument start-up and operation. Adjust the analyzer to optimize performance.

(2) Zero the carbon dioxide analyzer with either purified synthetic air or zero-grade nitrogen.

(3) Calibrate on each normally used operating range with carbon dioxide-in-N_2 calibration or span gases having nominal concentrations between 10 and 90 percent of that range. A minimum of six evenly spaced points covering at least 80 percent of the 10 to 90 range (64 percent) is required (see following table).

Example calibration points (%)	Acceptable for Calibration?
20, 30, 40, 50, 60, 70	No, range covered is 50 percent, not 64.
20, 30, 40, 50, 60, 70, 80, 90	Yes.
10, 25, 40, 55, 70, 85	Yes.
10, 30, 50, 70, 90	No, though equally spaced and entire range covered, a minimum of six points are needed.

Additional calibration points may be generated. For each range calibrated, if the deviation from a least-squares best-fit straight line is two percent or less of the value at each data point, calculate concentration values by use of a single calibration factor for that range. If the deviation exceeds two percent at any point, use the best-fit non-linear equation which represents the data to within two percent of each test point to determine concentration.

(b) The initial and periodic interference, system check, and calibration test procedures specified in §§86.316, 86.319, 86.320, 86.321, and 86.322 of this chapter may be used in lieu of the procedures in this section.

§ 90.321 NDIR analyzer calibration.

(a) *Detector optimization.* If necessary, follow the instrument manufacturer's instructions for initial start-up and basic operating adjustments.

(b) *Calibration curve.* Develop a calibration curve for each range used as follows:

(1) Zero the analyzer.

(2) Span the analyzer to give a response of approximately 90 percent of full-scale chart deflection.

(3) Recheck the zero response. If it has changed more than 0.5 percent of full scale, repeat the steps given in paragraphs (b)(1) and (b)(2) of this section.

(4) Record the response of calibration gases having nominal concentrations between 10 and 90 percent of full-scale concentration. A minimum of six evenly spaced points covering at least 80 percent of the 10 to 90 range (64 percent) is required (see following table).

Example calibration points (%)	Acceptable for calibration?
20, 30, 40, 50, 60, 70	No, range covered is 50 percent, not 64.
20, 30, 40, 50, 60, 70, 80, 90	Yes.
10, 25, 40, 55, 70, 85	Yes.
10, 30, 50, 70, 90	No, though equally spaced and entire range covered, a minimum of six points are needed.

(5) Generate a calibration curve. The calibration curve must be of fourth order or less, have five or fewer coefficients, and be of the form of the following equation (1) or (2). Include zero as a data point. Compensation for known impurities in the zero gas can be made to the zero-data point. The calibration curve must fit the data points within two percent of point or one percent of full scale, whichever is less.

$$y = Ax^4 + Bx^3 + Cx^2 + Dx + E \qquad (1)$$

$$y = \frac{x}{Ax^4 + Bx^3 + Cx^2 + Dx + E} \qquad (2)$$

where:

y = concentration

x = chart deflection

(6) Option. A new calibration curve need not be generated if:

(i) A calibration curve conforming to paragraph (b)(5) of this section exists; or,

(ii) The responses generated in paragraph (b)(4) of this section are within one percent of full scale or two percent of point, whichever is less, of the responses predicted by the calibration curve for the gases used in paragraph (b)(4) of this section.

(7) If multiple range analyzers are used, the lowest range used must meet the curve fit requirements below 15 percent of full scale.

(c) *Linear calibration criteria.* If any range is within two percent of being linear, a linear calibration may be used. To determine if this criterion is met:

(1) Perform a linear least-square regression on the data generated. Use an equation of the form y=mx, where x is the actual chart deflection and y is the concentration.

(2) Use the equation z=y/m to find the linear chart deflection (designated as z) for each calibration gas concentration (designated as y).

(3) Determine the linearity (designated as percent L) for each calibration gas by:

$$\% L = \frac{(z - x)}{\text{Full-scale linear chart deflection}} \times (100)$$

(4) The linearity criterion is met if the %L is less than ± two percent for each data point generated. For each emission test, use a calibration curve of the form Y=mx. The slope (designated as m) is defined for each range by the spanning process.

§90.322 Calibration of other equipment.

Calibrate other test equipment used for testing as often as required by the test equipment manufacturer or as necessary according to good engineering practice.

§90.323 Analyzer bench checks.

(a) Prior to initial use and after major repairs, verify that each analyzer complies with the specifications given in Table 2 in Appendix A of this subpart.

(b) If a stainless steel NO_2 to NO converter is used, condition all new or replacement converters. The conditioning consists of either purging the converter with air for a minimum of four hours or until the converter efficiency is greater than 90 percent. The converter must be at operational temperature while purging. Do not use this procedure prior to checking converter efficiency on in-use converters.

§90.324 Analyzer leakage check.

(a) *Vacuum side leak check.* (1) Check any location within the analysis system where a vacuum leak could affect the test results.

(2) The maximum allowable leakage rate on the vacuum side is 0.5 percent of the in-use flow rate for the portion of the system being checked. The analyzer flows and bypass flows may be used to estimate the in-use flow rates.

(3) The sample probe and the connection between the sample probe and valve V2, see Figure 2 in Appendix B of this subpart, may be excluded from the leak check.

(b) *Pressure side leak check.* The maximum allowable leakage rate on the pressure side is five percent of the in-use flow rate.

§90.325 Analyzer interference checks.

(a) Gases present in the exhaust other than the one being analyzed can interfere with the reading in several ways. Positive interference occurs in NDIR and PMD instruments when the interfering gas gives the same effect as the gas being measured, but to a lesser degree. Negative interference occurs in NDIR instruments by the interfering gas broadening the absorption band of the measured gas, and in CLD instruments by the interfering gas quenching the radiation. The interference checks described in this section are to be made initially and after any major repairs that could affect analyzer performance.

(b) *CO analyzer water and CO_2 interference checks.* Bubble through water at

room temperature a CO_2 span gas having a concentration of between 80 percent and 100 percent inclusive of full scale of the maximum operating range used during testing and record the analyzer response. For dry measurements, this mixture may be introduced into the sample system prior to the water trap. The analyzer response must not be more than one percent of full scale for ranges equal to or above 300 ppm or more than three ppm for ranges below 300 ppm.

(c) *NO^X* analyzer quench check. The two gases of concern for CLD (and HCLD) analyzers are CO_2 and water vapor. Quench responses to these two gases are proportional to their concentrations and, therefore, require test techniques to determine quench at the highest expected concentrations experienced during testing.

(1) *NO_X analyzer CO_2 quench check.* (i) Pass a CO_2 span gas having a concentration of 80 percent to 100 percent of full scale of the maximum operating range used during testing through the CO_2 NDIR analyzer and record the value ''a.''

(ii) Dilute the CO_2 span gas approximately 50 percent with NO span gas and pass through the CO_2 NDIR and CLD (or HCLD). Record the CO_2 and NO values as ''b'' and ''c'' respectively.

(iii) Shut off the CO_2 and pass only the NO span gas through the CLD (or HCLD). Record the NO value as ''d.''

(iv) Calculate the percent CO_2 quench as follows, not to exceed three percent:

$$\%\ CO_2\ \text{quench} = 100 \times \left(1 - \frac{(c \times a)}{(d \times a) - (d \times b)}\right) \times (a/b)$$

Where:

a=Undiluted CO_2 concentration (percent)

b=Diluted CO_2 concentration (percent)

c=Diluted NO concentration (ppm)

d=Undiluted NO concentration (ppm)

(2) *NO_X analyzer water quench check.* (i) This check applies to wet measurements only. An NO span gas having a concentration of 80 percent to 100 percent of full scale of a normal operating range is passed through the CLD (or HCLD) and the response recorded as ''D''. The NO span gas is then bubbled through water at room temperature and passed through the CLD (or HCLD) and the analyzer's response recorded as AR. Determine and record the analyzer's absolute operating pressure and the bubbler water temperature. (It is important that the NO span gas contains minimal NO_2 concentration for this check. No allowance for absorption of NO_2 in water has been made in the following quench calculations.)

(ii) Calculations for water quench must consider dilution of the NO span gas with water vapor and scaling of the water vapor concentration of the mixture to that expected during testing. Determine the mixture's saturated vapor pressure (designated as Pwb) that corresponds to the bubbler water temperature. Calculate the water concentration (''Z1'', percent) in the mixture by the following equation:

$$Z1 = 100 \times \frac{Pwb}{GP}$$

where GP is the analyzer's standard operating pressure (pascals).

(iii) Calculate the expected dilute NO span gas and water vapor mixture concentration (designated as D1) by the following equation:

$$D1 = D \times \left(1 - \frac{Z1}{100}\right)$$

§ 90.326 Pre- and post-test analyzer calibration.

Calibrate the range of each analyzer used during the engine exhaust emission test prior to and after each test in accordance with the following:

(a) Make the calibration by using a zero gas and a span gas. The span gas value must be between 75 percent and

100 percent of full scale, inclusive, of the measuring range.

(b) Use the same analyzer(s) flow rate and pressure as that used during exhaust emission test sampling.

(c) Warm-up and stabilize the analyzer(s) before the calibration is made.

(d) If necessary clean and/or replace filter elements before calibration is made.

(e) Calibrate analyzer(s) as follows:

(1) Zero the analyzer using the appropriate zero gas. Adjust analyzer zero if necessary. Zero reading should be stable.

(2) Span the analyzer using the appropriate span gas for the range being calibrated. Adjust the analyzer to the calibration set point if necessary.

(3) Re-check zero and span set points.

(4) If the response of the zero gas or span gas differs more than one percent of full scale, then repeat paragraphs (e)(1) through (3) of this section.

§90.327 Sampling system requirements.

(a) *Sample component surface temperature.* For sampling systems which use heated components, use engineering judgment to locate the coolest portion of each component (pump, sample line section, filters, and so forth) in the heated portion of the sampling system that has a separate source of power or heating element. Monitor the temperature at that location. If several components are within an oven, then only the surface temperature of the component with the largest thermal mass and the oven temperature need be measured.

(b) If water is removed by condensation, monitor the sample gas temperature or sample dew point either within the water trap or downstream. It may not exceed 7° C.

§90.328 Measurement equipment accuracy/calibration frequency table.

(a) The accuracy of measurements must be such that the maximum tolerances shown in Table 2 in Appendix A of this subpart are not exceeded.

(b) All equipment and analyzers must be calibrated according to the frequencies shown in Table 2 in Appendix A of this subpart.

(c) Prior to initial use and after major repairs, bench check each analyzer (see §90.323).

(d) Calibrate equipment as specified in §90.306 and §§90.315 through 90.322.

(e) At least monthly, or after any maintenance which could alter calibration, perform the following calibrations and checks.

(1) Leak check the vacuum side of the system (see §90.324(a)).

(2) Verify that the automatic data collection system (if used) meets the requirements found in Table 2 in Appendix A of this subpart.

(3) Check the fuel flow measurement instrument to insure that the specifications in Table 2 in Appendix A of this subpart are met.

(f) Verify that all NDIR analyzers meet the water rejection ratio and the CO_2 rejection ratio as specified in §90.325.

(g) Verify that the dynamometer test stand and power output instrumentation meet the specifications in Table 2 in Appendix A of this subpart.

§90.329 Catalyst thermal stress test.

(a) *Oven characteristics.* The oven used for thermally stressing the test catalyst must be capable of maintaining a temperature of 500 ± 5 °C and 1000 ± 10 °C.

(b) *Evaluation gas composition.* (1) A synthetic exhaust gas mixture is used for evaluating the effect of thermal stress on catalyst conversion efficiency.

(2) The synthetic exhaust gas mixture must have the following composition:

Constituent	Volume percent	Parts per million
Carbon Monoxide	1	.....
Oxygen	1.3	.....
Carbon Dioxide	3.8	.....
Water Vapor	10	.....
Sulfer dioxide	.....	20
Oxides of nitrogen	.....	280
Hydrogen	.....	3500
Hydrocarbon*	.....	4000
Nitrogen = Balance		

*Propylene/propane ratio = 2/1.

APPENDIX A TO SUBPART D OF PART 90—TABLES

TABLE 1.—SYMBOLS USED IN SUBPART D

Symbol	Term	Unit
CO	Carbon monoxide.	
CO_2	Carbon dioxide.	
NO	Nitric oxide.	
NO_2	Nitrogen dioxide.	
NO_X	Oxides of nitrogen.	
O_2	Oxygen.	
conc	Concentration (ppm by volume)	ppm
f	Engine specific parameter considering atmospheric conditions.	
F_{FCB}	Fuel specific factor for the carbon balance calculation.	
F_{FD}	Fuel specific factor for exhaust flow calculation on dry basis.	
F_{FH}	Fuel specific factor representing the hydrogen to carbon ratio.	
F_{FW}	Fuel specific factor for exhaust flow calculation on wet basis.	
G_{AIRW}	Intake air mass flow rate on wet basis	kg/h
G_{AIRD}	Intake air mass flow rate on dry basis	kg/h
G_{EXHW}	Exhaust gas mass flow rate on wet basis	kg/h
G_{Fuel}	Fuel mass flow rate	kg/h
H	Absolute humidity (water content related to dry air)	gr/kg
i	Subscript denoting an individual mode.	
K_H	Humidity correction factor.	
L	Percent torque related to maximum torque for the test mode	percent
mass	Pollutant mass flow	g/h
$n_{d,i}$	Engine speed (average at the i'th mode during the cycle)	1/min
P_s	Dry atmospheric pressure	kPa
P_d	Test ambient saturation vapor pressure at ambient temperature	kPa
P	Gross power output uncorrected	kW
P_{AUX}	Declared total power absorbed by auxiliaries fitted for the test	kW
P_M	Maximum power measured at the test speed under test conditions	kW
P_i	$P_i = P_{M,i} + P_{AUX,\ i}$.	
P_B	Total barometric pressure (average of the pre-test and post-test values)	kPa
R_a	Relative humidity of the ambient air	percent
T	Absolute temperature at air inlet	C
T_{be}	Air temperature after the charge air cooler (if applicable) (average)	C
T_{cout}	Coolant temperature outlet (average)	C
T_{Dd}	Absolute dew point temperature	C
$T_{d,i}$	Torque (average at the i'th mode during the cycle)	N-m
T_{SC}	Temperature of the intercooled air	C
$T_{ref.}$	Reference temperature	C
V_{EXHD}	Exhaust gas volume flow rate on dry basis	m^3/h
V_{AIRW}	Intake air volume flow rate on wet basis	m^3/h
P_B	Total barometric pressure	kPa
V_{EXHW}	Exhaust gas volume flow rate on wet basis	m^3/h
WF	Weighing factor.	
WF_E	Effective weighing factor.	

TABLE 2.—MEASUREMENT CALIBRATION ACCURACY AND FREQUENCY

No.	Item	Permissible deviation from reading*		Calibration frequency
		Non-idle	Idle	
1	Engine speed	± 2 %	Same	Monthly or within one month prior to the certification test.
2	Torque	± 2 %		Monthly or within one month prior to the certification test.
3	Fuel consumption	± 2 %	±5%	Monthly or within one month prior to the certification test.
4	Air consumption	± 2 %	±5%	As required.
5	Coolant temperature	± 2° C	Same	As required.
6	Lubricant temperature	± 2° C	Same	As required.
7	Exhaust back pressure	± 5 %	Same	As required.
8	Inlet depression	± 5 %	Same	As required.
9	Exhaust gas temperature	± 15° C	Same	As required.
10	Air inlet temperature (combustion air)	± 2° C	Same	As required.
11	Atmospheric pressure	± 0.5 %	Same	As required.
12	Humidity (combustion air) (relative)	± 3.0 %	Same	As required.
13	Fuel temperature	± 2° C	Same	As required.
14	Temperature with regard to dilution system	± 2° C	Same	As required.
15	Dilution air humidity	± 3 % absolute	Same	As required.
16	HC analyzer	± 2 %**	Same	Monthly or within one month prior to the certification test.
17	CO analyzer	± 2 %**	Same	Monthly or within one month prior to the certification test.
18	NO_X analyzer	± 2 %**	Same	Monthly or within one month prior to the certification test.
19	NO_X converter check	90 %	Same	Monthly or within one month prior to the certification test.
20	CO_2 analyzer	± 2 %**	Same	Monthly or within one month prior to the certification test.

*All accuracy requirements pertain to the final recorded value which is inclusive of the data acquisition system.
**If reading is under 100 ppm then the accuracy shall be ± 2 ppm.

TABLE 3.—TEST FUEL SPECIFICATIONS

Item	Property	Tolerances	Procedure (ASTM) [1]
Sulfur, ppm max.	339		D 2622–92
Benzene, max. %	1.5		D 3606–92
RVP, psi	8.7	±0.2	D 5191–93a
Octane, R+M/2	87.3	±0.5	D 2699–92 D 2700–92
IBP, ° C	32.8	±11.0	D 86–93
10 % point, ° C	53.3	±5.5	D 86–93
50 % point, ° C	103.3	±5.5	D 86–93
90 % point, ° C	165.6	±5.5	D 86–93
End Point, max. ° C	212.8		D 86–93
Phosphorus, g/liter, max.	0.02		D 3231–89
Lead, g/liter, max.	0.02		
Manganese, g/liter, max.	0.004		
Aromatics, %	32.0	±4.0	D 1319–89
Olefins, %	9.2	±4.0	D 1319–89
Saturates, %	Remainder		D 1319–89

[1] All ASTM procedures in this table have been incorporated by reference. See § 90.7.

APPENDIX B TO SUBPART D OF PART 90—FIGURES

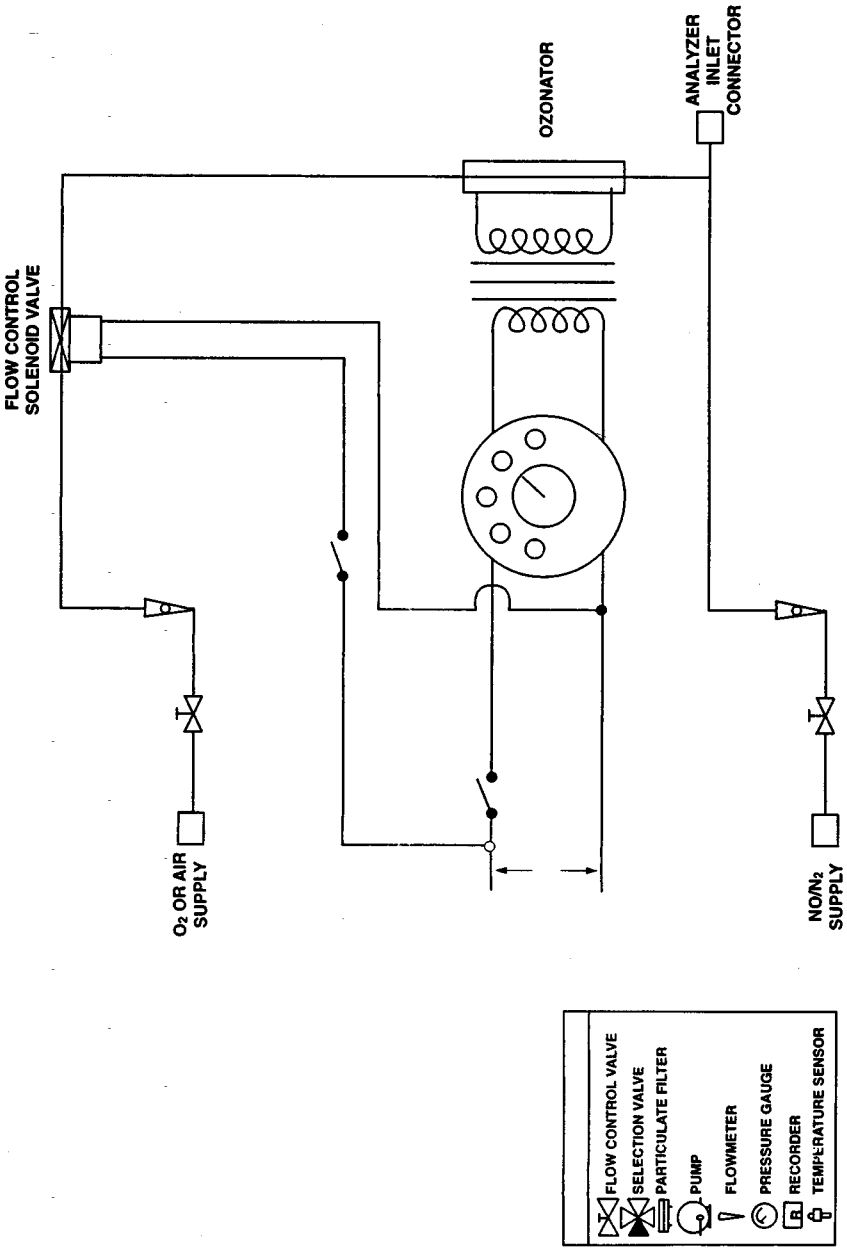

Figure 1. — NOx Converter Efficiency Detector

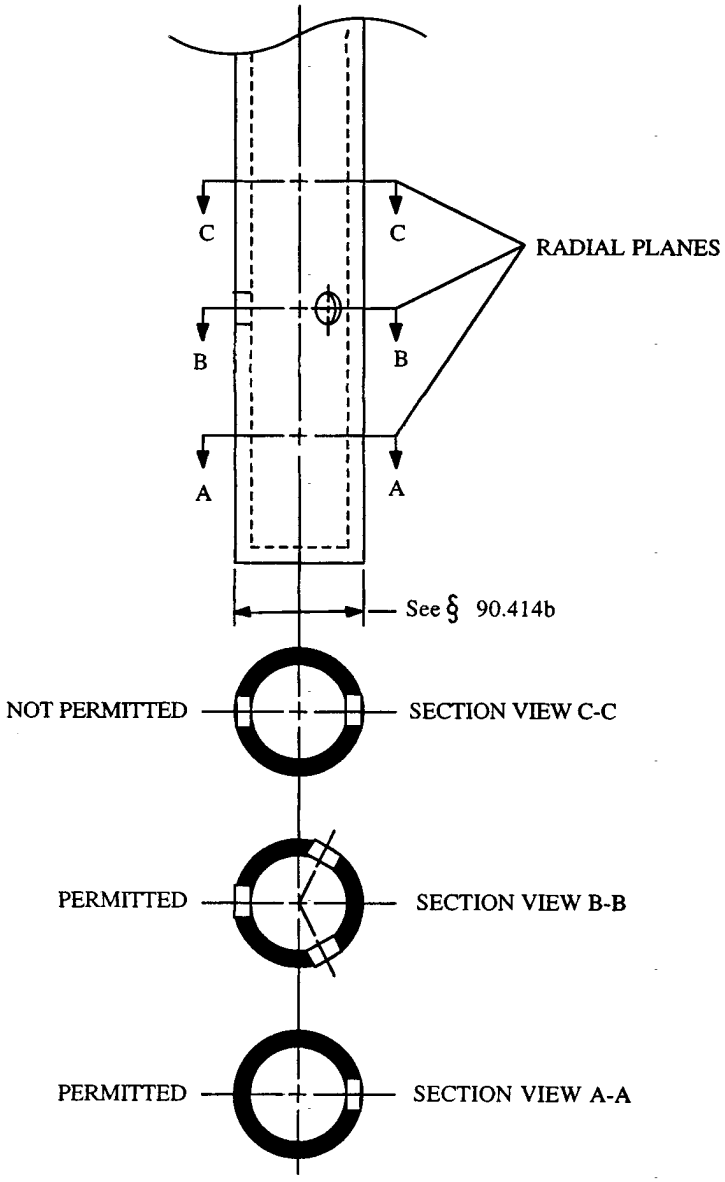

Figure 2.—Sample Probe and Typical Hole Spacings

Subpart E—Gaseous Exhaust Test Procedures

§90.401 Applicability.

(a) This subpart describes the procedures to follow in order to perform exhaust emission tests on new nonroad spark-ignition engines and vehicles subject to the provisions of subpart A of part 90. Provisions specific to raw gas sampling are in §90.414 through §90.419, provisions specific to constant volume sampling are in §90.420 through §90.426. All other sections in this subpart apply to both raw gas sampling and constant volume sampling except where indicated otherwise.

(b) Requirements for emission test equipment and calibrating this equipment are found in subpart D of this part.

§90.402 Definitions.

The definitions in §90.3, §90.101, and §90.302 apply to this subpart.

§90.403 Symbols, acronyms, and abbreviations.

(a) The acronyms and abbreviations in §90.5 apply to this subpart.

(b) The symbols in Table 1 in Appendix A to Subpart D apply to this subpart.

§90.404 Test procedure overview.

(a) The test consists of prescribed sequences of engine operating conditions to be conducted on an engine dynamometer or equivalent load and speed measurement device. The exhaust gases generated during engine operation are sampled either raw or dilute and specific components are analyzed through the analytical system.

(b) The test is designed to determine the brake-specific emissions of hydrocarbons, carbon monoxide, carbon dioxide, and oxides of nitrogen and fuel consumption. The test consists of three different test cycles which are application specific for engines which span the typical operating range of nonroad spark-ignition engines. Two cycles exist for Class I and II engines and one is for Class III, IV, and V engines (see §90.103(a) and §90.116(b) for the definitions of Class I—V engines). The test cycles for Class I and II engines consist of one idle mode and five power modes at one speed (rated or intermediate). The test cycle for Class III, IV, and V engines consists of one idle mode at idle speed and one power mode at rated speed. These procedures require the determination of the concentration of each pollutant, fuel flow, and the power output during each mode. The measured values are weighted and used to calculate the grams of each pollutant emitted per brake kilowatt hour (g/kW-hr).

(c)(1) When an engine is tested for exhaust emissions the complete engine must be tested, with all emission control devices installed and functioning.

(2) On air cooled engines, the cooling fan must be installed. For engines whose cooling fan serves a dual purpose, such as an air pump/blower, an external fan may be used to provide the engine with cooling air and the original cooling fan may be removed.

(d) All emission control systems installed on or incorporated in the application must be functioning during all procedures in this subpart. In case of component malfunction or failure, no maintenance is allowed without prior approval from the Administrator, in accordance with §90.119.

§90.405 Recorded information.

(a) Record the information described in this section for each test, where applicable.

(b) *Test data; general.* (1) Engine identification number.

(2) Engine emission control system.

(3) Test operator(s).

(4) Number of hours of operation accumulated on the engine prior to beginning the warm-up portion of the test (to the nearest tenth hour).

(5) Fuel identification.

(6) For 2-stroke engines, fuel/oil mixture ratio.

(7) Date of most recent analyzer bench calibration.

(8) All pertinent instrument information such as tuning, gain, serial numbers, detector number, and calibration curve(s). As long as this information is traceable, it may be summarized by system number or analyzer identification numbers.

(c) *Test data; pre-test.* (1) Date and time of day.

(2) Test number.

(3) Barometric pressure; as an option, barometric pressure can be measured as a modal measurement instead of or in addition to a pre- and post-test measurement.

(4) Recorder chart or equivalent. Identify for each test segment zero traces for each range used, and span traces for each range used.

(d) *Test data; modal.* (1) Recorder chart or equivalent. Identify for each test mode the emission concentration traces and the associated analyzer range(s).

(2) Observed engine torque.

(3) Observed engine rpm.

(4) Intake air flow if applicable.

(5) Test cell temperature and humidity for each mode.

(6) For raw gas testing; fuel flow for each mode. Fuel flow measurement is not required for dilute testing, but is allowed. If the fuel flow measurement is a volume measurement system, record the fuel temperature in the measurement system for fuel density corrections to the mass flow rate. If the fuel temperature is within 3° C of the calibration temperature, no density correction is required.

(7) Engine intake temperature and humidity, if applicable.

(8) Exhaust mixing chamber surface temperature, if applicable.

(9) Exhaust sample line temperature, if applicable.

(10) Engine fuel inlet pressure.

(e) *Test data; post-test.* (1) Recorder chart or equivalent. Identify the hang-up check.

(2) Recorder chart or equivalent. Identify the zero traces for each range used and the span traces for each range used.

(3) Total number of hours of operation accumulated on the engine (to the nearest tenth hour).

(4) Barometric pressure, post-test segment.

§ 90.406 Engine parameters to be measured and recorded.

Measure or calculate, then record the engine parameters in Table 1 in Appendix A of this subpart.

§ 90.407 Engine inlet and exhaust systems.

(a) The engine manufacturer is liable for exhaust emission compliance over the full range of air inlet filter systems and exhaust muffler systems.

(b) The air inlet filter system and exhaust muffler system combination used on the test engine must be the systems expected to yield the highest emission levels.

§ 90.408 Pre-test procedures.

(a) *Engine service accumulation and stabilization procedure.* Use the service accumulation procedure determined by the manufacturer for exhaust emission stabilizing of an engine, consistent with good engineering practice (see § 90.118).

(1) The manufacturer determines, for each engine family, the number of hours at which the engine exhaust emission control system combination is stabilized for emission testing. However, this stabilization procedure may not exceed 12 hours. The manufacturer must maintain, and provide to the Administrator upon request, a record of the rationale used in making this determination. If the manufactuer can document that at some time prior to the full 12 hour service accumulation period the engine emissions are decreasing for the remainder of the 12 hours, the service accumulation may be completed at that time. The manufacturer may elect to accumulate 12 hours on each test engine within an engine family without making this determination.

(2) During service accumulation, the fuel and lubricants specified in § 90.308 must be used.

(3) Engine maintenance during service accumulation is allowed only in accordance with § 90.118.

(b) *Engine pre-test preparation.* (1) Drain and charge the fuel tank(s) with the specified test fuel (see § 90.308(b)) to 50 percent of the tank's nominal capacity. If an external fuel tank is used, the engine fuel inlet system pressure must be typical of what the engine will see in use.

(2) Operate the engine on the dynamometer measuring the fuel consumption (fuel consumption required only for raw gas sampling method) and

torque before and after the emission sampling equipment is installed, including the sample probe, using the modes specified in the following table.

Engine class	Test cycle	Operating mode
I, II	A	6
I, II	B	1
III, IV, V	C	1

These modes are from Table 2 in Appendix A of this subpart. The emission sampling equipment may not significantly affect the operational characteristics of the engine (typically the results should agree within five percent).

(c) *Analyzer pre-test procedures.* (1) If necessary, warm up and stabilize the analyzer(s) before calibrations are performed.

(2) Replace or clean the filter elements and then leak check the system as required by §90.324(a). If necessary, allow the heated sample line, filters, and pumps to reach operating temperature.

(3) Perform the following system checks:

(i) If necessary, check the sample-line temperature. Heated FID sample line temperature must be maintained between 110° C and 230° C; a heated NO_x sample line temperature must be maintained between 60° C and 230° C.

(ii) Check that the system response time has been accounted for prior to sample collection data recording.

(iii) A HC hang-up check is permitted (see §90.413(e)).

(4) Check analyzer zero and span before and after each test at a minimum. Further, check analyzer zero and span any time a range change is made or at the maximum demonstrated time span for stability for each analyzer used.

(d) Check system flow rates and pressures and reset, if necessary.

§90.409 Engine dynamometer test run.

(a) *Engine and dynamometer start-up.* (1) Only adjustments in accordance with §90.119 may be made to the test engine prior to starting a test.

(2) If necessary, warm up the dynamometer as recommended by the dynamometer manufacturer or use good engineering practice.

(3) At the manufacturer's option, the engine can be run with the throttle in a fixed position or by using the engine's governor (if the engine is manufactured with a governor). In either case, the engine speed and load must meet the requirements specified in paragraph (b)(12) of this section.

(b) Each test consists of the following steps.

(1) Record the general test data as specified in §90.405(b).

(2) Precondition the engine in the following manner;

(i) Operate the engine at a power greater than or equal to 50 percent maximum power at the appropriate speed (rated or intermediate) for 20 minutes;

(ii) Option. If the engine has been operating on service accumulation for a minimum of 40 minutes, the service accumulation may be substituted for step (i).

(3) Record all pre-test data specified in §90.405(c).

(4) Start the test cycle (see §90.410) within five minutes of the completion of the steps required by paragraph (b)(2) of this section.

(5) Modes are to be performed in the numerical order specified for the appropriate test cycle (see ''Mode Points'' Table 2 in Appendix A of this subpart).

(6) For Class I and II engines, during the maximum torque mode calculate the torque corresponding to 75, 50, 25, and 10 percent of the maximum observed torque (see Table 2 in Appendix A to this subpart).

(7) Once engine speed and load are set for a mode, run the engine for a sufficient period of time to achieve thermal stability. At the manufacturer's option, determine and document the appropriate criterion for thermal stability for each engine family. If the manufacture chooses not to make this determination, an acceptable alternative is to run the engine at each mode until the cylinder head temperature remains within a 10°C bandwidth for three minutes. Cylinder head temperature may be measured at the base of the spark plug. After stability is achieved, emission measurements are initiated.

(8) Record all modal data specified in §90.405(d) for a minimum time period of the last two minutes of each mode.

Longer averaging periods are acceptable, but the data averaged must be from a continuous time period. The duration of time during which this data is recorded is referred to as the ''sampling period.'' The data collected during the sampling period is used for modal emission calculations.

(9) Continuously record the analyzer's response to the exhaust gas during each mode.

(10) Modes may be repeated.

(11) If a delay of more than one hour occurs between the end of one mode and the beginning of another mode, the test is void and must be restarted at paragraph (b)(1) of this section.

(12) The engine speed and load must be maintained within the requirements of § 90.410 during the sampling period of each mode. If this requirement is not met, the mode is void and must be restarted.

(13) If at any time during a mode the test equipment malfunctions or the specifications in § 90.410 can not be met, the test is void and must be aborted. Corrective action should be taken and the test restarted.

(14) If at any time during an operating mode the engine stalls, restart the engine immediately and continue the test starting with the steps required by paragraph (b)(6) of this section. If the engine will not restart within five minutes the test is void. If maintenance is required on the engine, advance approval from the Administrator is required as specified in § 90.119. After corrective action is taken, the engine may be rescheduled for testing. Report the reason for the malfunction (if determined) and the corrective action taken.

(15) Fuel flow and air flow during the idle condition may be determined just prior to or immediately following the dynamometer sequence, if longer times are required for accurate measurements. If the dilute sampling method (Constant Volume Sampling) is used, neither fuel flow nor air flow measurements are required.

(c) *Exhaust gas measurements.* (1) Measure HC, CO, CO_2, and NO_X concentration in the exhaust sample.

(2) Each analyzer range that may be used during a test mode must have the zero and span responses recorded prior to the start of the test. Only the range(s) used to measure the emissions during the test is required to have its zero and span recorded after the completion of the test. Depending on the stability of each individual analyzer, more frequent zero checks or spans between modes may be necessary.

(3) It is permitted to change filter elements between modes.

(4) A leak check is permitted between modes.

(5) A hang-up check is permitted between modes (see § 90.413).

(6) If, during the emission measurement portion of a mode, the value of the gauges downstream of the NDIR analyzer(s) G3 or G4 (see Figure 2 in Appendix B of Subpart D), differs by more than ±0.5 kPa from the pretest value, the test mode is void.

§ 90.410 Engine test cycle.

(a) Follow the appropriate 6-mode test cycle for Class I and II engines and 2-mode test cycle for Class III, IV, and V engines when testing spark-ignition engines (see Table 2 in Appendix A of this subpart).

(b) During each non-idle mode, hold both the specified speed and load within ± five percent of point. During the idle mode, hold speed within ± ten percent of the manufacturer's specified idle engine speed.

(c) If the operating conditions specified in paragraph (b) of this section for Class I and II engines using Mode Points 2, 3, 4, and 5 cannot be maintained, the Administrator may authorize deviations from the specified load conditions. Such deviations may not exceed 10 percent of the maximum torque at the test speed. The minimum deviations, above and below the specified load, necessary for stable operation shall be determined by the manufacturer and approved by the Administrator prior to the test run.

(d) Do not include power generated during the idle mode, Mode 11, in the calculation of emission results.

§ 90.411 Post-test analyzer procedures.

(a) Perform a HC hang-up check within 60 seconds of the completion of the last mode in the test. Use the following procedure:

(1) Introduce a zero gas or room air into the sample probe or valve V2 (see Figure 2 in Appendix B of Subpart D) to check the ''hangup zero'' response. Simultaneously start a time measurement.

(2) Select the lowest HC range used during the test.

(3) Within four minutes of beginning the time measurement in paragraph (a)(1) of this section, the difference between the zero gas response and the hang-up zero response may not be greater than 5.0 percent of full scale or 10 ppmC, whichever is greater.

(b) Begin the analyzer span checks within six minutes after the completion of the last mode in the test. Record for each analyzer the zero and span response for each range used during the preceding test or test segment.

(c) If during the test, the filter element(s) were replaced or cleaned, a vacuum check must be performed per §90.324(a) immediately after the span checks. If the vacuum side leak check does not meet the requirements of §90.324(a), the test is void.

(d) Read and record the post-test data specified in §90.405(e).

(e) For a valid test, the analyzer drift between the before-segment and after-segment span checks for each analyzer must meet the following requirements:

(1) The span drift (defined as the change in the difference between the zero response and the span response) may not exceed two percent of full-scale chart deflection for each range used.

(2) The zero response drift may not exceed two percent of full-scale chart deflection for each range used above 155 ppm (or ppm C), or three percent of full-scale chart deflection for each range below 155 ppm (or ppm C).

§90.412 Data logging.

(a) A computer or any other automatic data collection (ADC) device(s) may be used as long as the system meets the requirements of this subpart.

(b) Determine from the data collection records the analyzer responses corresponding to the end of each mode.

(c) Record data at a minimum of rate of one Hz (one time per second).

(d) Determine the final value for power by averaging the individually calculated power points for each value of speed and torque recorded during the sampling period. As an alternative, the final value for power can be calculated from the average values for speed and torque, collected during the sampling period.

(e) Determine the final value for CO_2, CO, HC, and NO_X concentrations by averaging the concentration of each point taken during the sample period for each mode.

§90.413 Exhaust sample procedure—gaseous components.

(a) *Automatic data collection equipment requirements.* The analyzer response may be read by automatic data collection (ADC) equipment such as computers, data loggers, and so forth. If ADC equipment is used, the following is required:

(1) For dilute grab (''bag'') sample analysis, the analyzer response must be stable at greater than 99 percent of the final reading for the dilute exhaust sample. The ADC must store a single value representing the average chart deflection over a 10-second stabilized period. Alternatively, the ADC may store the individual instantaneous chart deflections collected over a 10-second stabilized period.

(2) For continuous analysis systems, the ADC must store a single value representing the average integrated concentration over a measurement period. Alternatively, the ADC may store the individual instantaneous values collected during the measurement period.

(3) The chart deflections or average integrated concentrations required in paragraphs (a)(1) and (a)(2) of this section may be stored on long-term computer storage devices such as computer tapes, storage discs, punch cards, or they may be printed in a listing for storage. In either case a chart recorder is not required and records from a chart recorder, if they exist, need not be stored.

(4) If ADC equipment is used to interpret analyzer values, the ADC equipment is subject to the calibration specifications of the analyzer as if the ADC equipment is part of analyzer system.

(b) Data records from any one or a combination of analyzers may be stored as chart recorder records.

(c) *Grab sample analysis.* For dilute grab sample analysis perform the following procedure:

(1) Calibrate analyzers using the procedure described in § 90.326.

(2) Record the most recent zero and span response as the pre-analysis values.

(3) Measure and record HC, CO, CO_2, and NO_X concentrations in the exhaust sample bag(s) and background sample bag(s) using the same flow rates and pressures.

(4) Good engineering practice dictates that exhaust emission sample bag analyzer readings below 15 percent of full scale should generally not be used.

(5) A post-analysis zero and span calibration check of each range must be performed and the values recorded. The number of events that may occur between the pre- and post-checks is not specified. However, the difference between pre-analysis zero and span values (recorded in paragraph (c)(2) or (c)(3) of this section) versus those recorded for the post-analysis check may not exceed the zero drift limit or the span drift limit of two percent of full-scale chart deflection for any range used. Otherwise the analysis is void.

(d) *Continuous sample analysis.* For continuous sample analysis perform the following procedure:

(1) Calibrate analyzers using the procedure described in § 90.326.

(2) Leak check portions of the sampling system that operate at negative gauge pressures when sampling and allow heated sample lines, filters, pumps, and so forth to stabilize at operating temperature.

(3) Option: Determine the HC hang-up for the FID or HFID sampling system:

(i) Zero the analyzer using zero gas introduced at the analyzer port.

(ii) Flow zero gas through the overflow sampling system. Check the analyzer response.

(iii) If the overflow zero response exceeds the analyzer zero response by two percent or more of the FID or HFID full-scale deflection, hang-up is indicated and corrective action must be taken (see paragraph (e) of this section).

(iv) The complete system hang-up check specified in paragraph (e) of this section is recommended as a periodic check.

(4) If necessary, recalibrate analyzer using the procedure specified in paragraph (d)(1) of this section.

(5) Good engineering practice dictates that analyzers used for continuous analysis should be operated such that the measured concentration falls between 15 percent and 100 percent of full scale.

(6) Record the most recent zero and span response as the pre-analysis values.

(7) Collect background HC, CO, CO_2, and NO_X in a sample bag (for dilute exhaust sampling only, see § 90.422).

(8) Perform a post-analysis zero and span check for each range used at the conditions specified in paragraph (d)(1) of this section. Record these responses as the post-analysis values.

(9) Neither the zero drift nor the span drift between the pre-analysis and post-analysis checks on any range used may exceed three percent for HC, or two percent for NO_X, CO, and CO_2, of full-scale chart deflection, or the test is void. (If the HC drift is greater than three percent of full-scale chart deflection, HC hang-up is likely.)

(10) Determine background levels of HC, NO_X, CO, or CO_2 (for dilute exhaust sampling only) by the grab (''bag'') technique outlined in paragraph (c) of this section.

(e) *Hydrocarbon hang-up.* If HC hang-up is indicated, the following procedure may be performed:

(1) Fill a clean, evacuated sample bag with background air.

(2) Zero and span the HFID at the analyzer ports.

(3) Analyze the background air sample bag through the analyzer ports.

(4) Analyze the background air through the entire sample probe system.

(5) If the difference between the readings obtained is two ppm or more, clean the sample probe and the sample line.

(6) Reassemble the sample system, heat to specified temperature, and repeat the procedure in paragraphs (e)(1) through (e)(5) of this section.

§90.414 Raw gaseous exhaust sampling and analytical system description.

(a) *Schematic drawing.* An example of a sampling and analytical system which may be used for testing under this subpart is shown in Figure 2 in Appendix B of Subpart D. All components or parts of components that are wetted by the sample or corrosive calibration gases must be either chemically cleaned stainless steel or inert material (e.g., polytetrafluoroethylene resin). The use of ''gauge savers'' or ''protectors'' with nonreactive diaphragms to reduce dead volumes is permitted.

(b) *Sample probe.* (1) The sample probe must be a straight, closed end, stainless steel, multi-hole probe. The inside diameter may not be greater than the inside diameter of the sample line +0.03 cm. The wall thickness of the probe may not be greater than 0.10 cm. The fitting that attaches the probe to the exhaust pipe must be as small as practical in order to minimize heat loss from the probe.

(2) The probe must have a minimum of three holes. The spacing of the radial planes for each hole in the probe must be such that they cover approximately equal cross-sectional areas of the exhaust duct. See Figure 2 in Appendix B of Subpart D. The angular spacing of the holes must be approximately equal. The angular spacing of any two holes in one plane may not be 180° ± 20° (i.e., section view C–C of Figure 2 in Appendix B of Subpart D). The holes should be sized such that each has approximately the same flow. If only three holes are used, they may not all be in the same radial plane.

(3) The exhaust gas probe must be located in a position which yields a well mixed, homogenous sample of the engine exhaust. The probe must extend radially across the exhaust gas stream. The probe must pass through the approximate center and must extend across at least 80 percent of the exhaust gas stream. The exact position of the probe may vary from engine family to engine family.

(c) *Mixing chamber.* The exhaust mixing chamber is located in the exhaust system between the muffler and the sample probe. The mixing chamber is an optional component of the raw gas sampling equipment.

(1) The internal volume of the mixing chamber may not be less than ten times the cylinder displacement of the engine under test. The shape of the mixing chamber must be such that it provides a well mixed, homogenous sample at the sample probe location.

(2) Couple the mixing chamber as closely as possible to the engine muffler.

(3) Maintain the inner surface of the mixing chamber at a minimum temperature of 179° C.

(4) Thermocouple temperature monitoring of the mixing chamber inner surface is required to assure wall temperatures specified in paragraph (c)(3) of this section. The temperature measurement must be accurate to within ± 5° C.

(5) The sample probe must extend radially across the exit of the mixing chamber. The probe must pass through the approximate center and must extend across at least 80 percent of the diameter of the exit. The exact position of the probe may vary from engine family to engine family. The probe must be located in a position which yields a well mixed, homogenous sample of the exhaust.

(d) *Sample transfer line.* (1) The maximum inside diameter of the sample line may not exceed 1.32 cm.

(2) If valve V2 in Figure 1 of Appendix B of this subpart is used, the sample probe must connect directly to valve V2. The location of optional valve V2 in Figure 1 of Appendix B of Subpart D may not be greater than 1.22 m from the exhaust duct.

(3) The location of optional valve V16, Figure 1 of Appendix B of this subpart, may not be greater than 61 cm from the sample pump. The leakage rate for this section on the pressure side of the sample pump may not exceed the leakage rate specification for the vacuum side of the pump.

(e) *Venting.* All vents, including analyzer vents, bypass flow, and pressure relief vents, of regulators should be vented in such a manner as to avoid endangering personnel in the immediate area.

(f) Any variation from the specifications in this subpart, including performance specifications and emission detection methods, may be used only with prior approval by the Administrator.

(g) Additional components, such as instruments, valves, solenoids, pumps, switches, and so forth, may be employed to provide additional information and coordinate the functions of the component systems.

(h) The following requirements must be incorporated in each system used for raw testing under this subpart.

(1) Take the sample for all components with one sample probe and split it internally to the different analyzers.

(2) Heat the sample transport system from the engine exhaust pipe to the HC analyzer for the raw gas sampling method as indicated in Figure 1 in Appendix B of this subpart. The NO_X analyzer for the raw gas sampling method may be heated as indicated in Figure 1 in Appendix B of this subpart. The HC analyzer and the NO_X analyzer for the dilute sampling method may be heated as indicated in Figure 1 in Appendix B of this subpart.

§ 90.415 Raw gaseous sampling procedures.

Fit all heated sampling lines with a heated filter to extract solid particles from the flow of gas required for analysis. The sample line for HC measurement must be heated. The sample line for CO, CO_2 and NO_X analysis may be heated or unheated.

§ 90.416 Intake air flow measurement specifications.

(a) If used, the engine intake air flow measurement method used must have a range large enough to accurately measure the air flow over the engine operating range during the test. Overall measurement accuracy must be two percent of full-scale value of the measurement device for all modes except the idle mode. For the idle mode, the measurement accuracy must be ± five percent or less of the full-scale value. The Administrator must be advised of the method used prior to testing.

(b) When an engine system incorporates devices that affect the air flow measurement (such as air bleeds, air injection, pulsed air, and so forth) resulting in understated exhaust emission results, make corrections to the exhaust emission results to account for such effects.

§ 90.417 Fuel flow measurement specifications.

(a) Fuel flow measurement is required only for raw testing. Fuel flow is allowed for dilute testing. If the measured fuel flow is used in the dilute calculations for brake-specific fuel consumption (see § 90.426(e)), the fuel flow instrument must meet the requirements of this section.

(b) The fuel flow measurement instrument must have a minimum accuracy of one percent of full-scale flow rate for each measurement range used. An exception is allowed for the idle mode. For this mode, the minimum accuracy is ± five percent of full-scale flow rate for the measurement range used. The controlling parameters are the elapsed time measurement of the event and the weight or volume measurement.

§ 90.418 Data evaluation for gaseous emissions.

For the evaluation of the gaseous emissions recording, record the last four minutes of each mode and determine the average values for HC, CO, CO_2 and NO_X during each mode from the average concentration readings determined from the corresponding calibration data. Longer averaging times are acceptable, but the sampling period which is reported must be a continuous set of data.

§ 90.419 Raw emission sampling calculations—gasoline fueled engines.

(a) Derive the final weighted brake-specific mass emission rates (g/kW–hr) through the steps described in this section.

(b) *Air and fuel flow method.* If both air and fuel flow mass rates are measured, use the following equations to determine the weighted emission values for the test engine:

$$W_{NO_X} = \left(G_{AIRD} + G_{FUEL}\right) \times \frac{M_{NO_2}}{M_{exh}} \times WNO_X \times K_H \times \frac{1}{10^6}$$

$$W_{HC} = \left(G_{AIRD} + G_{FUEL}\right) \times \frac{M_{HC_{exh}}}{M_{exh}} \times WHC \times \frac{1}{10^6}$$

$$W_{CO} = \left(G_{AIRD} + G_{FUEL}\right) \times \frac{M_{CO}}{M_{exh}} \times WCO \times \frac{1}{10^2}$$

Where:

W_{HC}=Mass rate of HC in exhaust [g/hr],

G_{AIRD}=Intake air mass flow rate on dry basis [g/hr],

G_{FUEL}=Fuel mass flow rate [g/hr],

M_{HCexh}=Molecular weight of hydrocarbons in the exhaust, see the following equation:

$$M_{HC_{exh}} = 12.01 + \alpha 1.008 + \beta 16.00$$

Where:

α=Hydrogen/carbon atomic ratio of the fuel

β=Oxygen/carbon atomic ratio of the fuel

M_{exh}=Molecular weight of the total exhaust, see the following equation:

$$M_{exh} = \frac{M_{HC_{exh}} \times WHC}{10^6} + \frac{28.01 \times WCO}{10^2} + \frac{44.01 \times WCO_2}{10^2} + \frac{46.01 \times WNO_X}{10^6} + \frac{32.00 \times WO_2}{10^2} + \frac{2.016 \times WH_2}{10^2} + 18.01 \times (1 - K) + \frac{+28.01 \times \left[100 - \frac{WHC}{10^4} - WCO - WCO_2 - \frac{WNO_X}{10^4} - WO_2 - WH_2 - 100 \times (1 - K)\right]}{10^2}$$

Where:

WHC=HC volume concentration in exhaust, ppmC wet

WCO=CO percent concentration in the exhaust, wet

DCO=CO percent concentration in the exhaust, dry

WCO_2=CO_2 percent concentration in the exhaust, wet

DCO_2=CO_2 percent concentration in the exhaust, dry

WNO_X=NO volume concentration in exhaust, ppm wet

WO_2=O_2 percent concentration in the exhaust, wet

WH_2=H_2 percent concentration in exhaust, wet

K=correction factor to be used when converting dry measurements to a wet basis. Therefore, wet concentration=dry concentration × K,

where K is:

$$K = \frac{1}{1 + 0.005 \times \left(DCO + DCO_2\right) \times \alpha - 0.01 DH_2}$$

DH_2=H_2 percent concentration in exhaust, dry, calculated from the following equation:

$$DH_2 = \frac{0.5 \times \alpha \times DCO \times (DCO + DCO_2)}{DCO + (3 \times DCO_2)}$$

W_{co}=Mass rate of CO in exhaust, [g/hr]
M_{co}=Molecular weight of CO=28.01
W_{NOx}=Mass rate of NO_X in exhaust, [g/hr]
M_{NO2}=Molecular weight of NO_2=46.01
K_H=Factor for correcting the effects of humidity on NO_2 formation for 4-stroke gasoline small engines, see the equation below :

$$K_H = \frac{1}{1 - 0.0329(H - 10.71)}$$

Where:
H=absolute humidity of the intake air in grams of moisture per kilogram of dry air, see § 90.426(f) for a method by which H can be calculated.

For two-stroke gasoline engines, K_H should be set to 1.

(c) *Fuel flow method*. The following equations are to be used when fuel flow is selected as the basis for mass emission calculations using the raw gas method.

$$W_{HC} = \frac{M_{HC_{exh}}}{M_F} \times \frac{G_{FUEL}}{TC} \times \frac{WHC}{10^4}$$

$$W_{CO} = \frac{M_{CO}}{M_F} \times \frac{G_{FUEL}}{TC} \times WCO$$

$$W_{NO_X} = \frac{M_{NO_X}}{M_F} \times \frac{G_{FUEL}}{TC} \times \frac{WNO_X}{10^4} \times K_H$$

Where:
W_{HC}=Mass rate of HC in exhaust, [g/hr]
$M_{HC\ exh}$=Molecular weight of hydrocarbons in the exhaust, see following equation:

$$M_{HC_{exh}} = M_C + \alpha M_H + \beta M_O$$

M_C=Molecular weight of carbon=12.01 [g/mole]
M_H=Molecular weight of hydrogen=1.008 [g/mole]
M_O=Molecular weight of oxygen=16.00 [g/mole]
α=Hydrogen to carbon ratio of the test fuel
β=Oxygen to carbon ratio of the test fuel
M_F=Molecular weight of test fuel
G_{FUEL}=Fuel mass flow rate, [g/hr]
TC=Total carbon in exhaust, see following equation:

$$TC = WCO + WCO_2 + \frac{WHC}{10^4}$$

WCO=CO percent concentration in the exhaust, wet
WCO_2=CO_2 percent concentration in the exhaust, wet
DCO=CO percent concentration in the exhaust, dry
DCO_2=CO_2 percent concentration in the exhaust, dry
WHC=HC volume concentration in exhaust, ppmC wet
WNO_X=NO_X volume concentration in exhaust, ppm wet
K=correction factor to be used when converting dry measurements to a wet basis. Therefore, wet concentration=dry concentration x K, where K is:

$$K = \frac{1}{1 + 0.005 \times (DCO + DCO_2) \times \alpha - 0.01\, DH_2}$$

DH_2=H_2 percent concentration in exhaust, dry, calculated from the following equation:

$$DH_2 = \frac{0.5 \times \alpha \times DCO \times (DCO + DCO_2)}{DCO + (3 \times DCO_2)}$$

W_{CO}=Mass rate of CO in exhaust, [g/hr]
M_{CO}=Molecular weight of CO=28.01
WNO_X=Mass rate of NO_X in exhaust, [g/hr]
MNO_2=Molecular weight of NO_2=46.01
K_H=Factor for correcting the effects of humidity on NO_2 formation for 4-stroke gasoline small engines, see the following equation:

$$K_H = \frac{1}{1 - 0.0329(H - 10.71)}$$

Where:
H=specific humidity of the intake air in grams of moisture per kilogram of dry air.
For two-stroke gasoline engines, K_H should be set to 1.

(d) Calculate the final weighted brake-specific emission rate for each individual gas component using the following equation:

$$A_{WM} = \frac{\sum_{i}^{n}(W_i \times WF_i)}{\sum_{i}^{n}(P_i \times WF_i)}$$

Where:
A_{WM}=Final weighted brake-specific mass emission rate (HC, CO, NO_X) [g/kW-hr]
W_i=Mass emission rate during mode i [g/hr]
WF_i=Weighting factors for each mode according to § 90.410(a)
P_i=Gross average power generated during mode i [kW], calculated from the following equation,

$$P_i \frac{2\pi}{60{,}000} \times \text{speed} \times \text{torque}$$

Where:
speed=average engine speed measured during mode i [rev./minute]
torque=average engine torque measured during mode i [N-m] (e) Compute the final reported brake-specific fuel

$$BSFC = \frac{\sum_{i}^{n}\left(G_{FUEL_i} \times WF_i\right)}{\sum_{i}^{n}\left(P_i \times F_i\right)}$$

consumption (BSFC) by use of the following formula:
Where:
BSFC=brake-specific fuel consumption in grams of fuel per kilowatt-hour (g/kW-hr).
$G_{FUEL\ i}$=Fuel mass flow rate of the engine during mode i [g/hr]
WF_i=Weighting factors for each mode according to § 90.410(a)
P_i=Gross average power generated during mode i [kW].

§ 90.420 CVS concept of exhaust gas sampling system.

(a) A dilute exhaust sampling system is designed to directly measure the true mass of emissions in engine exhaust without the necessity of measuring either fuel flow or intake air flow. This is accomplished by diluting the exhaust produced by a test engine with ambient background air and measuring the total diluted exhaust flow rate and the concentration of emissions within the dilute flow. Total mass flow of an emission is then easily calculated.

(b) A constant volume sampler (CVS) is typically used to control the total amount of dilute flow through the system. As the name implies, a CVS restricts flow to a known value dependent only on the dilute exhaust temperature and pressure.

(c) For the testing described in this subpart, a CVS must consist of: a mixing tunnel into which the engine exhaust and dilutant (background) air are dumped; a dilute exhaust flow metering system; a dilute exhaust sample port; a background sample port; a dilute exhaust sampling system; and a background sampling system.

(1) *Mixing tunnel.* The mixing tunnel must be constructed such that complete mixing of the engine exhaust and background air is assured prior to the sampling probe.

(2) *Exhaust flow metering system.* A dilute exhaust flow metering system must be used to control the total flow rate of the dilute engine exhaust as described in § 90.421.

(3) *Exhaust sample port.* A dilute exhaust sample port must be located in or downstream of the mixing tunnel at a point where complete mixing of the engine exhaust and background air is assured.

(4) *Background sample port.* A dilute exhaust sample port must be located in the stream of background air before it is mixed with the engine exhaust. The background probe must draw a representative sample of the background air during each sampling mode.

(5) *Exhaust sampling system.* The dilute exhaust sampling system controls the flow of samples from the mixing tunnel to the analyzer system. This could be either a continuous sampling system or grab (bag) sampling system. If a critical flow venturi (CFV) is used on the dilute exhaust sample probe, this system must assure that the sample CFV is in choke flow during testing. If no CFV is used, this system must assure a constant volumetric flow rate through the dilute exhaust sample probe or must incorporate electronic flow compensation.

(6) *Background sampling system.* The background sampling system controls the flow of samples from the background air supply to the analyzer system. This could be either a continuous sampling system or grab (bag) sampling system. This system must assure a constant volumetric flow rate through the background sample probe.

§ 90.421 Dilute gaseous exhaust sampling and analytical system description.

(a) *General.* The exhaust gas sampling system described in this section is designed to measure the true mass of gaseous emissions in the exhaust of nonroad small spark-ignition engines. This system utilizes the Constant Volume Sampling (CVS) concept (described in § 90.420) of measuring mass emissions of HC, NO_X, CO, and CO_2. Grab sampling for individual modes is an acceptable method of dilute testing for all constituents, HC, NO_X, CO, and CO_2. Continuous dilute sampling is not required for any of the exhaust constituents, but is allowable for all. Heated sampling is not required for any of the constituents, but is allowable for HC and NO_X. The mass of gaseous emissions is determined from the sample concentration and total flow over the test period. As an option, the measurement of total fuel mass consumed over a cycle may be substituted for the exhaust measurement of CO_2. General requirements are as follows:

(1) This sampling system requires the use of a Positive Displacement Pump—Constant Volume Sampler (PDP–CVS) system with a heat exchanger, or a Critical Flow Venturi—Constant Volume Sampler (CFV–CVS) system with CFV sample probes and/or a heat exchanger or electronic flow compensation. Figure 2 in Appendix B of this subpart is a schematic drawing of the PDP–CVS system. Figure 3 in Appendix B of this subpart is a schematic drawing of the CFV–CVS system.

(2) The HC analytical system requires:

(i) Grab sampling (see § 90.420, and Figure 2 or Figure 3 in Appendix B of this subpart) and analytical capabilities (see § 90.423, and Figure 4 in Appendix B of this subpart), or

(ii) Continuously integrated measurement of diluted HC meeting the minimum requirements and technical specifications contained in paragraph (b)(2) of this section.

(iii) The dilute HC analytical system for nonroad small spark-ignition engines does not require a heated flame ionization detector (HFID).

(iv) If used, the HFID sample must be taken directly from the diluted exhaust stream through a heated probe and integrated continuously over the test cycle.

(v) The heated probe must be located in the sampling system far enough downstream of the mixing area to ensure a uniform sample distribution across the CVS duct at the sampling zone.

(3) The CO and CO_2 analytical system requires:

(i) Grab sampling (see § 90.420, and Figure 2 or Figure 3 in Appendix B of this subpart) and analytical capabilities (see § 90.423, and Figure 4 in Appendix B of this subpart), or

(ii) Continuously integrated measurement of diluted CO and CO_2 meeting the minimum requirements and technical specifications contained in paragraph (b)(4) of this section.

(4) The NO_X analytical system requires:

(i) Grab sampling (see § 90.420, and Figure 2 or Figure 3 in Appendix B of this subpart) and analytical capabilities (see § 90.423, and Figure 4 in Appendix B of this subpart), or

(ii) A continuously integrated measurement of diluted NO_X meeting the minimum requirements and technical specifications contained in paragraph (b)(4) of this section.

(5) Since various configurations can produce equivalent results, exact conformance with these drawings is not required. Additional components such as instruments, valves, solenoids, pumps, and switches may be used to provide additional information and coordinate the functions of the component systems. Other components, such as snubbers, which are not needed to maintain accuracy on some systems, may be excluded if their exclusion is based upon good engineering judgment.

(6) Other sampling and/or analytical systems may be used if shown to yield equivalent results and if approved in advance by the Administrator.

(b) *Component description.* The components necessary for exhaust 0sampling must meet the following requirements:

(1) *Exhaust dilution system.* The PDP–CVS must conform to all of the requirements listed for the exhaust gas PDP–CVS in § 90.420 of this chapter. The CFV–CVS must conform to all of the requirements listed for the exhaust gas CFV–CVS in § 90.420 of this chapter. In addition, the CVS must conform to the following requirements:

(i) The flow capacity of the CVS must be sufficient to maintain the diluted exhaust stream in the dilution system at a temperature of 190 °C or less at the sampling zone for hydrocarbon measurement and as required to prevent condensation at any point in the dilution system. Gaseous emission samples may be taken directly from this sampling point.

(ii) For the CFV–CVS, either a heat exchanger or electronic flow compensation is required (see Figure 3 in Appendix B of this subpart).

(iii) For the CFV–CVS when a heat exchanger is used, the gas mixture temperature, measured at a point immediately ahead of the critical flow venturi, must be within ±11 °C of the average operating temperature observed during the test with the simultaneous requirement that condensation does not occur. The temperature measuring system (sensors and readout) must have an accuracy and precision of ±2° C. For systems utilizing a flow compensator to maintain proportional flow, the requirement for maintaining constant temperature is not necessary.

(2) *Continuous HC measurement system.* (i) The continuous HC sample system (as shown in Figure 2 or 3 in Appendix B of this subpart) uses an ''overflow'' zero and span system. In this type of system, excess zero or span gas spills out of the probe when zero and span checks of the analyzer are made.

(ii) No other analyzers may draw a sample from the continuous HC sample probe, line, or system, unless a common sample pump is used for all analyzers and the sample line system design reflects good engineering practice.

(iii) The overflow gas flow rates into the sample line must be at least 105 percent of the sample system flow rate.

(iv) The overflow gases must enter the sample line as close as practical to the outside surface of the CVS duct or dilution system.

(v) The continuous HC sampling system consists of a probe (which for a HFID analyzer must raise the sample to the specified temperature) and, where used, a sample transfer system (which for a HFID must maintain the specified temperature). The HFID continuous hydrocarbon sampling system (exclusive of the probe) must:

(A) Maintain a wall temperature of 190 ±11 °C as measured at every separately controlled heated component (that is, filters, heated line sections), using permanent thermocouples located at each of the separate components.

(B) Have a wall temperature of 190 ±11 °C over its entire length. The temperature of the system is demonstrated by profiling the thermal characteristics of the system where possible at

initial installation and after any major maintenance performed on the system. The profiling is to be accomplished using the insertion thermocouple probing technique. The system temperature must be monitored continuously during testing at the locations and temperature described in § 90.421(b)(2).

(C) Maintain a gas temperature of 190 ±11 °C immediately before the heated filter and HFID. Determine these gas temperatures by a temperature sensor located immediately upstream of each component.

(vi) The continuous hydrocarbon sampling probe:

(A) Is defined as the first 25.4 to 76.2 cm of the continuous hydrocarbon sampling system.

(B) Has a 0.483 cm minimum inside diameter.

(C) Is installed in the dilution system at a point where the dilution air and exhaust are well mixed and provide a homogenous mixture.

(D) Is sufficiently distant (radially) from other probes and the system wall so as to be free from the influence of any wakes or eddies.

(E) For a continuous HFID sample probe, the probe must increases the gas stream temperature to 190 ±11 °C at the exit of the probe. Demonstrate the ability of the probe to accomplish this using the insertion thermocouple technique at initial installation and after any major maintenance. Demonstrate compliance with the temperature specification by continuously recording during each test the temperature of either the gas stream or the wall of the sample probe at its terminus.

(vii) The response time of the continuous measurement system must be taken into account when logging test data.

(3) *Sample mixing.* (i) Configure the dilution system to ensure a well mixed, homogeneous sample prior to the sampling probe(s).

(ii) Make the temperature of the diluted exhaust stream inside the dilution system sufficient to prevent water condensation.

(iii) Direct the engine exhaust downstream at the point where it is introduced into the dilution system.

(4) *Continuously integrated* NO_X, CO, and CO_2 measurement systems.

(i) *Sample probe requirements:*

(A) The sample probe for continously intergrated NO_X, CO, and CO_2 must be in the same plane as the continuous HC probe, but sufficiently distant (radially) from other probes and the tunnel wall so as to be free from the influences of any wakes or eddies.

(B) The sample probe for continously intergrated NO_X, CO, and CO_2 must be heated and insulated over the entire length, to prevent water condensation, to a minimum temperature of 55° C. Sample gas temperature immediately before the first filter in the system must be at least 55° C.

(ii) Conform to the continuous NO_X, CO, or CO_2 sampling and analysis system to the specifications of part 86, subpart D of this chapter with the following exceptions and revisions:

(A) Heat the system components requiring heating only to prevent water condensation, the minimum component temperature is 55° C.

(B) Coordinate analysis system response time with CVS flow fluctuations and sampling time/test cycle offsets, if necessary.

(C) Use only analytical gases conforming to the specifications of § 90.312 of this subpart for calibration, zero and span checks.

(D) Use a calibration curve conforming to § 90.321 for CO and CO_2 and § 90.318 for NO_X for any range on a linear analyzer below 155 ppm.

(iii) Convert the chart deflections or voltage output of analyzers with nonlinear calibration curves to concentration values by the calibration curve(s) specified in § 90.321 of this chapter before flow correction (if used) and subsequent integration takes place.

§ 90.422 Background sample.

(a) Background samples are produced by drawing a sample of the dilution air during the exhaust collection phase of each test cycle mode.

(1) An individual background sample may be produced and analyzed for each mode. Hence, a unique background value will be used for the emission calculations for each mode.

(2) Alternatively, a single background sample may be produced by drawing a sample during the collection phase of each test cycle mode. Hence, a

single cumulative background value will be used for the emission calculations for each mode.

(b) For analysis of the individual sample described in paragraph (a)(1) of this section, a single value representing the average chart deflection over a 10-second stabilized period must be stored. All readings taken during the data logging period must be stable within ± one percent of full scale.

(c) Measure HC, CO, CO_2, and NO_X exhaust and background concentrations in the sample bag(s) with approximately the same flow rates and pressures used during calibration.

§90.423 Exhaust gas analytical system; CVS grab sample.

(a) *Schematic drawings.* Figure 4 in Appendix B of this subpart is a schematic drawing of the exhaust gas analytical systems used for analyzing CVS grab ''bag'' samples from spark-ignition engines. Since various configurations can produce accurate results, exact conformance with the drawing is not required. Additional components such as instruments, valves, solenoids, pumps and switches may be used to provide additional information and coordinate the functions of the component systems. Other components such as snubbers, which are not needed to maintain accuracy in some systems, may be excluded if their exclusion is based upon good engineering judgment.

(b) *Major component description.* The analytical system, Figure 4 in Appendix B of this subpart, consists of a flame ionization detector (FID) or a heated flame ionization detector (HFID) for the measurement of hydrocarbons, non-dispersive infrared analyzers (NDIR) for the measurement of carbon monoxide and carbon dioxide, and a chemiluminescence detector (CLD) (or heated CLD (HCLD)) for the measurement of oxides of nitrogen. The exhaust gas analytical system must conform to the following requirements:

(1) The CLD (or HCLD) requires that the nitrogen dioxide present in the sample be converted to nitric oxide before analysis. Other types of analyzers may be used if shown to yield equivalent results and if approved in advance by the Administrator.

(2) If CO instruments are used which are essentially free of CO_2 and water vapor interference, the use of the conditioning column may be deleted. (See §90.317 and §90.320.)

(3) A CO instrument is considered to be essentially free of CO_2 and water vapor interference if its response to a mixture of three percent CO_2 in N_2, which has been bubbled through water at room temperature, produces an equivalent CO response, as measured on the most sensitive CO range, which is less than one percent of full-scale CO concentration on ranges above 300 ppm full scale or less than three ppm on ranges below 300 ppm full scale. (See §90.317.)

(c) *Alternate analytical systems.* Analysis systems meeting the specifications and requirements of this subpart for dilute sampling may be used upon approval of the Administrator.

(d) *Other analyzers and equipment.* Other types of analyzers and equipment may be used if shown to yield equivalent results and if approved in advance by the Administrator.

§90.424 Dilute sampling procedures—CVS calibration.

(a) The CVS is calibrated using an accurate flowmeter and restrictor valve.

(1) The flowmeter calibration must be traceable to the National Institute for Standards and Testing (NIST) and serves as the reference value (NIST ''true'' value) for the CVS calibration. (Note: In no case should an upstream screen or other restriction which can affect the flow be used ahead of the flowmeter unless calibrated throughout the flow range with such a device.)

(2) The CVS calibration procedures are designed for use of a ''metering venturi'' type flowmeter. Large radius or American Society of Mechanical Engineers (ASME) flow nozzles are considered equivalent if traceable to NIST measurements. Other measurement systems may be used if shown to be equivalent under the test conditions in this section and traceable to NIST measurements.

(3) Measurements of the various flowmeter parameters are recorded and related to flow through the CVS.

(4) Procedures using both PDP–CVS and CFV–CVS are outlined in the following paragraphs. Other procedures yielding equivalent results may be used if approved in advance by the Administrator.

(b) After the calibration curve has been obtained, verification of the entire system may be performed by injecting a known mass of gas into the system and comparing the mass indicated by the system to the true mass injected. An indicated error does not necessarily mean that the calibration is wrong, since other factors can influence the accuracy of the system (for example, analyzer calibration, leaks, or HC hangup). A verification procedure is found in paragraph (e) of this section.

(c) *PDP–CVS calibration.* (1) The following calibration procedure outlines the equipment, the test configuration, and the various parameters which must be measured to establish the flow rate of the CVS pump.

(i) All the parameters related to the pump are simultaneously measured with the parameters related to a flowmeter which is connected in series with the pump.

(ii) The calculated flow rate, in cm^3/s, (at pump inlet absolute pressure and temperature) can then be plotted versus a correlation function which is the value of a specific combination of pump parameters.

(iii) The linear equation which relates the pump flow and the correlation function is then determined.

(iv) In the event that a CVS has a multiple speed drive, a calibration for each range used must be performed.

(2) This calibration procedure is based on the measurement of the absolute values of the pump and flowmeter parameters that relate the flow rate at each point. Two conditions must be maintained to assure the accuracy and integrity of the calibration curve:

(i) The temperature stability must be maintained during calibration. (Flowmeters are sensitive to inlet temperature oscillations; this can cause the data points to be scattered. Gradual changes in temperature are acceptable as long as they occur over a period of several minutes.)

(ii) All connections and ducting between the flowmeter and the CVS pump must be absolutely void of leakage.

(3) During an exhaust emission test the measurement of these same pump parameters enables the user to calculate the flow rate from the calibration equation.

(4) Connect a system as shown in Figure 5 in Appendix B of this subpart. Although particular types of equipment are shown, other configurations that yield equivalent results may be used if approved in advance by the Administrator. For the system indicated, the following measurements and accuracies are required:

CALIBRATION DATA MEASUREMENTS

Parameter	Symbol	Units	Sensor-readout tolerances
Barometric pressure (corrected)	P_B	kPa	±.340 kPa.
Ambient temperature	T_A	° C	±.28° C.
Air temperature into metering venturi	ETI	° C	±1.11° C.
Pressure drop between the inlet and throat of metering venturi	EDP	kPa	±0.012 kPa.
Air flow	Q_S	m^3/min.	±0.5 percent of NIST value.
Air temperature at CVS pump inlet	PTI	° C	±1.11° C.
Pressure depression at CVS pump inlet	PPI	kPa	±0.055 kPa.
Pressure head at CVS pump outlet	PPO	kPa	±0.055 kPa.
Air temperature at CVS pump outlet (optional)	PTO	° C	±1.11° C.
Pump revolutions during test period	N	Revs	±1 Rev.
Elapsed time for test period	t	s	±0.5 s.

(5) After the system has been connected as shown in Figure 5 in Appendix B of this subpart, set the variable restrictor in the wide open position and run the CVS pump for 20 minutes. Record the calibration data.

(6) Reset the restrictor valve to a more restricted condition in an increment of pump inlet depression that will yield a minimum of six data points for the total calibration. Allow the system to stabilize for three minutes and repeat the data acquisition.

(7) *Data analysis:*

(i) The air flow rate, Q_s, at each test point is calculated in standard cubic feet per minute 20° C, 101.3 kPa from the flowmeter data using the manufacturer's prescribed method.

(ii) The air flow rate is then converted to pump flow, V_o, in cubic meter per revolution at absolute pump inlet temperature and pressure:

$$V_o = \frac{Q_s}{n} \times \frac{T_p}{293} \times \frac{101.3\,\text{kPa}}{P_p}$$

Where:

V_o=Pump flow, m^3/rev at T_p, P_p.

Q_s=Meter air flow rate in standard cubic meters per minute, standard conditions are 20° C, 101.3 kPa.

n=Pump speed in revolutions per minute.

T_p=Absolute pump inlet temperature in Kelvin, =PTI+273 [°K]

P_p=Absolute pump inlet pressure, kPa. $=P_B - PPI$

Where:

P_B=barometric pressure, kPa

PPI=Pump inlet depression, kPa.

(iii) The correlation function at each test point is then calculated from the calibration data:

$$X_o = \frac{1}{n}\sqrt{\left(\frac{\Delta p}{P_e}\right)}$$

Where:

X_o=correlation function.

Δp=The pressure differential from pump inlet to pump outlet [kPa] $\Delta p = P_e - P_p$.

Where:

P_e=Absolute pump outlet pressure [kPa], $P_e = P_B + PPI$

(iv) A linear least squares fit is performed to generate the calibration equation which has the form:

$$V_0 = D_o - M(X_o)$$

Where:

D_o and M are the intercept and slope constants, respectively, describing the regression line.

(8) A CVS system that has multiple speeds should be calibrated on each speed used. The calibration curves generated for the ranges will be approximately parallel and the intercept values, D_o, will increase as the pump flow range decreases.

(9) If the calibration has been performed carefully, the calculated values from the equation will be within ± 0.50 percent of the measured value of V_o. Values of M will vary from one pump to another, but values of D_o for pumps of the same make, model, and range should agree within ± three percent of each other. Calibrations should be performed at pump start-up and after major maintenance to assure the stability of the pump slip rate. Analysis of mass injection data will also reflect pump slip stability.

(d) *CFV–CVS calibration.* (1) Calibration of the CFV is based upon the flow equation for a critical venturi. Gas flow is a function of inlet pressure and temperature:

$$Q_s = \frac{K_v P}{\sqrt{T}}$$

Where:

Q_s=flow rate [m^3/min.]

K_v=calibration coefficient

P=absolute pressure [kPa]

T=absolute temperature [°K]

The calibration procedure described in paragraph (d)(3) of this section establishes the value of the calibration coefficient at measured values of pressure, temperature, and air flow.

(2) The manufacturer's recommended procedure must be followed for calibrating electronic portions of the CFV.

(3) Measurements necessary for flow calibration are as follows:

CALIBRATION DATA MEASUREMENTS

Parameter	Symbol	Units	Tolerances
Barometric Pressure (corrected)	P_B	kPa	±.34 kPa
Air temperature, into flowmeter	*ETI*	° C	±.28° C
Pressure drop between the inlet and throat of metering venturi.	*EDP*	in. H_2O	±.05 in H_2O
Air flow	Q_S	m^3/min	±.5 percent of NIST value
CFV inlet depression	*PPI*	(kPa)	±.055 kPa
Temperature at venturi inlet	T_V	° C	±2.22° C

(4) Set up equipment as shown in Figure 6 in Appendix B of this subpart and eliminate leaks. (Leaks between the flow measuring devices and the critical flow venturi will seriously affect the accuracy of the calibration.)

(5) Set the variable flow restrictor to the open position, start the blower, and allow the system to stabilize. Record data from all instruments.

(6) Vary the flow restrictor and make at least eight readings across the critical flow range of the venturi.

(7) *Data analysis.* The data recorded during the calibration are to be used in the following calculations:

(i) Calculate the air flow rate (designated as Q_s) at each test point in standard cubic feet per minute from the flow meter data using the manufacturer's prescribed method.

(ii) Calculate values of the calibration coefficient for each test point:

Where:

Q_s=Flow rate in standard cubic meters per minute, at

$$K_v = \frac{Q_s \sqrt{T_v}}{P_v}$$

the standard conditions of 20° C, 101.3 kPa.

T_v=Temperature at venturi inlet, °K.

P_v=Pressure at venturi inlet, kPa=$P_B - P_{PI}$

Where:

P_{PI}=Venturi inlet pressure depression, kPa.

(iii) Plot K_v as a function of venturi inlet pressure. For choked flow, K_v will have a relatively constant value. As pressure decreases (vacuum increases), the venturi becomes unchoked and K_v decreases. (See Figure 7 in Appendix B to Subpart D.)

(iv) For a minimum of eight points in the critical region, calculate an average K_v and the standard deviation.

(v) If the standard deviation exceeds 0.3 percent of the average K_v , take corrective action.

(e) *CVS system verification.* The following ''gravimetric'' technique may be used to verify that the CVS and analytical instruments can accurately measure a mass of gas that has been injected into the system. (Verification can also be accomplished by constant flow metering using critical flow orifice devices.)

(1) Obtain a small cylinder that has been charged with 99.5 percent or greater propane or carbon monoxide gas (CAUTION—carbon monoxide is poisonous).

(2) Determine a reference cylinder weight to the nearest 0.01 grams.

(3) Operate the CVS in the normal manner and release a quantity of pure propane into the system during the sampling period (approximately five minutes).

(4) The calculations are performed in the normal way except in the case of propane. The density of propane (0.6109 kg/m^3/carbon atom) is used in place of the density of exhaust hydrocarbons.

(5) The gravimetric mass is subtracted from the CVS measured mass and then divided by the gravimetric mass to determine the percent accuracy of the system.

(6) Good engineering practice requires that the cause for any discrepancy greater than ± two percent must be found and corrected.

§ 90.425 CVS calibration frequency.

Calibrate the CVS positive displacement pump or critical flow venturi following initial installation, major

maintenance, or as necessary when indicated by the CVS system verification (described in §90.424(e)).

§90.426 Dilute emission sampling calculations—gasoline fueled engines.

(a) The final reported emission test results must be computed by use of the following formula:

$$A_{WM} = \frac{\sum_{i}^{n}\left(W_i \cdot WF_i\right)}{\sum_{i}^{n}\left(P_i \cdot WF_i\right)} \cdot K_{H_i}$$

Where:

A_{WM}=Final weighted brake-specific mass emission rate for an emission (HC, CO, CO_2, or NO_X) [g/kW-hr]

W_i=Average mass flow rate of an emission (HC, CO, CO_2, NO_X) from a test engine during mode i [g/hr]

WF_i=Weighting factor for each mode i as defined in §90.410(a).

P_i=Gross average power generated during mode i [kW], calculated from the following equation,

$$P_i = \frac{2\pi}{60{,}000} \times \text{speed} \times \text{torque}$$

Where:

speed=average engine speed measured during mode i [rev./minute]

torque=average engine torque measured during mode i [N-m]

K_{Hi}=NO_X humidity correction factor for mode i. This correction factor only affects calculations for tion factor only affects calculations for NO_X and is equal to one for all other emissions. K_{Hi} is also equal to 1 for all two-stroke engines.

(b) The mass flow rate, W_i in g/hr, of an emission for mode i is determined from the following equations:

$$W_i = Q_i \cdot \text{Density} \cdot \left(\frac{C_{Di} - C_{Bi}}{10^6} \cdot \left(1 - \frac{1}{DF_i}\right)\right)$$

Where:

Q_i=Volumetric flow rate oandard conditions [m^3/hr at STP].

Density=Density of a specific emission ($Density_{HC}$, $Density_{CO}$, $Density_{CO2}$, $Density_{NOx}$) [g/m^3].

DF_i=Dilution factor of the dilute exhaust during mode i.

C_{Di}=Concentration of the emission (HC, CO, NO_X) in dilute exhaust extracted from the CVS during mode i [ppm].

C_{Bi}=Concentration of the emission (HC, CO, NO_X) in the background sample during mode i [ppm].

STP=Standard temperature and pressure. All volumetric calculations made for the equations in this section are to be corrected to a standard temperature of 20° C and 101.3 kPa.

(c) Densities for emissions that are to be measured for this test procedure are:

$Density_{HC}$=576.8 g/m^3

$Density_{NOX}$=1912 g/m^3

$Density_{CO}$=1164 g/m^3

$Density_{CO2}$=1829 g/m^3

(1) The value of $Density_{HC}$ above is calculated based on the assumption that the fuel used has a carbon to hydrogen ratio of 1:1.85. For other fuels $Density_{HC}$ can be calculated from the following formula:

$$\text{Density}_{HC} = \frac{M_{HC}}{R_{STP}}$$

Where:

M_{HC}=The molecular weight of the hydrocarbon molecule divided by the number of carbon atoms in the molecule [g/mole]

R_{STP}=Ideal gas constant for a gas at STP=0.024065 [m^3-mole].

(2) The idealized molecular weight of the exhaust hydrocarbons, i.e., the molecular weight of the hydrocarbon molecule divided by the number of carbon atoms in the molecule, M_{HC}, can be calculated from the following formula:

$$M_{HC} = M_C + \alpha M_H + \beta M_O$$

Where:

M_C=Molecular weight of carbon=12.01 [g/mole]

M_H=Molecular weight of hydrogen=1.008 [g/mole]

M_O=Molecular weight of oxygen=16.00 [g/mole]

α=Hydrogen to carbon ratio of the test fuel

β=Oxygen to carbon ratio of the test fuel

(3) The value of $Density_{NOX}$ above assumes that NO_X is entirely in the form of NO_2

(d) The dilution factor, DF, is the ratio of the volumetric flow rate of the background air to that of the

$$DF = \frac{13.4}{C_{D_{HC}} + C_{D_{CO}} + C_{D_{CO_2}}}$$

raw engine exhaust. The following formula is used to determine DF:

Where:

$C_{D\ HC}$=Concentration of HC in the dilute sample [ppm]

$C_{D\ CO}$=Concentration of CO in the dilute sample [ppm]

$C_{D\ CO2}$=Concentration of CO_2 in the dilute sample [ppm]

(e) The humidity correction factor K_H is an adjustment made to the measured NO_X. This corrects for the sensitivity that a spark-ignition engine has to the humidity of its combustion air. The following formula is used to determine K_H for NO_X calculations:

$$K_H = \frac{1}{1 - 0.0329(H - 10.71)}$$

Where:

H=Absolute humidity of the engine intake air [grams of water per kilogram of dry air].

(f) Calculate the absolute humidity of the engine intake air H using the following formula:

$$H = \frac{6.211 P_{dew}}{P_b - \left(\frac{P_{dew}}{100}\right)}$$

Where:

P_{dew}=Saturated vapor pressure at the dew point temperature [kPa]

P_b=Barometric pressure [kPa].

(g) Compute the final reported brake-specific fuel consumption (BSFC) by use of the following formula:

$$BSFC = \frac{\sum_i^n \left(G_{FUEL_i} \times WF_i\right)}{\sum_i^n \left(P_i \times WF_i\right)}$$

Where:

BSFC=brake-specific fuel consumption in grams of fuel per brake kilowatt-hour [g/kW-hr].

$G_{FUEL\ i}$=mass flow rate of engine fuel during mode i [g/hr]

WF_i=Weighting factors for each mode according to § 90.410(a)

P_i=Gross average power generated during mode i [kW], calculated from the following equation,

$$P_i = \frac{2\pi}{60{,}000} \times speed \times torque$$

Where:

speed=average engine speed measured during mode i [rev./minute]

torque=average engine torque measured during mode i [N–m]

(h) The fuel mass flow rate, F_i, can be either measured or calculated using the following formula

$$F_i = \frac{M_{FUEL}}{T}$$

Where:

M_{FUEL}=Mass of fuel consumed by the engine during the mode [g]

T=Duration of the sampling period [hr]

(i) The mass of fuel consumed during the mode sampling period, M_{FUEL}, can be calculated from the following equation:

$$M_{FUEL} = \frac{G_s}{R_2 \times 273.15}$$

Where:

G_s=Mass of carbon measured during the mode sampling period [g]

R_2=The fuel carbon weight fraction, which is the mass of carbon in fuel per mass of fuel [g/g]

The grams of carbon measured during the mode, G_s, can be calculated from the following equation:

$$G_s = \frac{12.011 \times HC_{mass}}{12.011 + 1.008\alpha} + 0.429CO_{mass} + 0.273CO_{2mass}$$

Where:

HC_{mass}=mass of hydrocarbon emissions for the mode sampling period [grams]

CO_{2mass}=mass of carbon monoxide emissions for the mode sampling period [grams]

CO_{2mass}=mass of carbon dioxide emissions for the mode sampling period [grams]

α=The atomic hydrogen to carbon ratio of the fuel

§ 90.427 Catalyst thermal stress resistance evaluation.

(a) The purpose of the evaluation procedure specified in this section is to determine the effect of thermal stress on catalyst conversion efficiency. The thermal stress is imposed on the test catalyst by exposing it to quiescent heated air in an oven. The evaluation of the effect of such stress on catalyst performance is based on the resultant degradation of the efficiency with which the conversions of specific pollutants are promoted. The application of this evaluation procedure involves the several steps that are described in the following paragraphs.

(b) *Determination of initial conversion efficiency*. (1) A synthetic exhaust gas mixture having the composition specified in § 90.329 is heated to a temperature of 450° C ± 5° C and passed through the new test catalyst or, optionally, a test catalyst that has been exposed to temperatures less than or equal to 500° C for less than or equal to two hours, under flow conditions that are representative of anticipated in-use conditions.

(2) The concentration of each pollutant of interest, that is, hydrocarbons, carbon monoxide, or oxides of nitrogen, in the effluent of the catalyst is determined by means of the instrumentation that is specified for exhaust gas analysis in subpart D of this part.

(3) The conversion efficiency for each pollutant is determined by:

(i) Subtracting the effluent concentration from the initial concentration;

(ii) Dividing this result by the initial concentration; and

(iii) Multiplying this result by 100 percent.

(c) *Imposition of thermal stress.* (1) The catalyst is placed in an oven that has been pre-heated to 1000° C and the temperature of the air in the oven is maintained at 1000° C ± 10° C for six hours.

(2) The catalyst is removed from the oven and allowed to cool to room temperature.

(d) *Determination of final conversion efficiency*. The steps listed in paragraph (b) of this section are repeated.

(e) *Determination of conversion efficiency degradation*.

(1) The final conversion efficiency determined in paragraph (c) of this section is subtracted from the initial conversion efficiency determined in paragraph (b) of this section.

(2) This result is divided by the initial conversion efficiency.

(3) This result is multiplied by 100 percent.

(f) *Determination of compliance with degradation limit.* The percent degradation determined in paragraph (e) of this section must not be greater than 20 percent.

Appendix A to Subpart E of Part 90—Tables

TABLE 1.—PARAMETERS TO BE MEASURED OR CALCULATED AND RECORDED

Parameter	Units
Airflow rate (dry), if applicable	g/h
Fuel flow rate	g/h
Engine Speed	rpm
Engine Torque Output	N m
Power Output	kW
Air inlet temperature	° C
Air humidity	mg/kg

Appendix A to Subpart E of Part 90—Tables—Continued

TABLE 1.—PARAMETERS TO BE MEASURED OR CALCULATED AND RECORDED

Parameter	Units
Coolant temperature (liquid cooled)	° C
Exhaust mixing chamber surface temperature, if applicable	° C
Exhaust sample line temperature, if applicable	° C
Total Accumulated hours of Engine Operation	h
Barometric Pressure	kPa

TABLE 2.—TEST CYCLES FOR CLASS I–V ENGINES

Mode Speed	1	2	3	4	5	6	7	8	9	10	11
	Rated Speed					Intermediate Speed					Idle
Mode Points—A											
Cycle	.....	.....	.....	.....	.....	1	2	3	4	5	6
Load Percent—A											
Cycle	.....	.....	.....	.....	.....	100	75	50	25	10	0
Weighting	.....	.....	.....	.....	.....	9%	20%	29%	30%	7%	5%
Mode Points—B											
Cycle	1	2	3	4	5	.....	.....	.....	.....	.....	6
Load Percent—B											
Cycle	100	75	50	25	10	.....	.....	.....	.....	.....	0
Weighting	9%	20%	29%	30%	7%	.....	.....	.....	.....	.....	5%
Mode Points—C											
Cycle	1	.....	.....	.....	.....	.....	.....	.....	.....	.....	2
Load Percent—C											
Cycle	100	.....	.....	.....	.....	.....	.....	.....	.....	.....	0
Weighting	90%	.....	.....	.....	.....	.....	.....	.....	.....	.....	10%

APPENDIX B TO SUBPART E OF PART 90—FIGURES

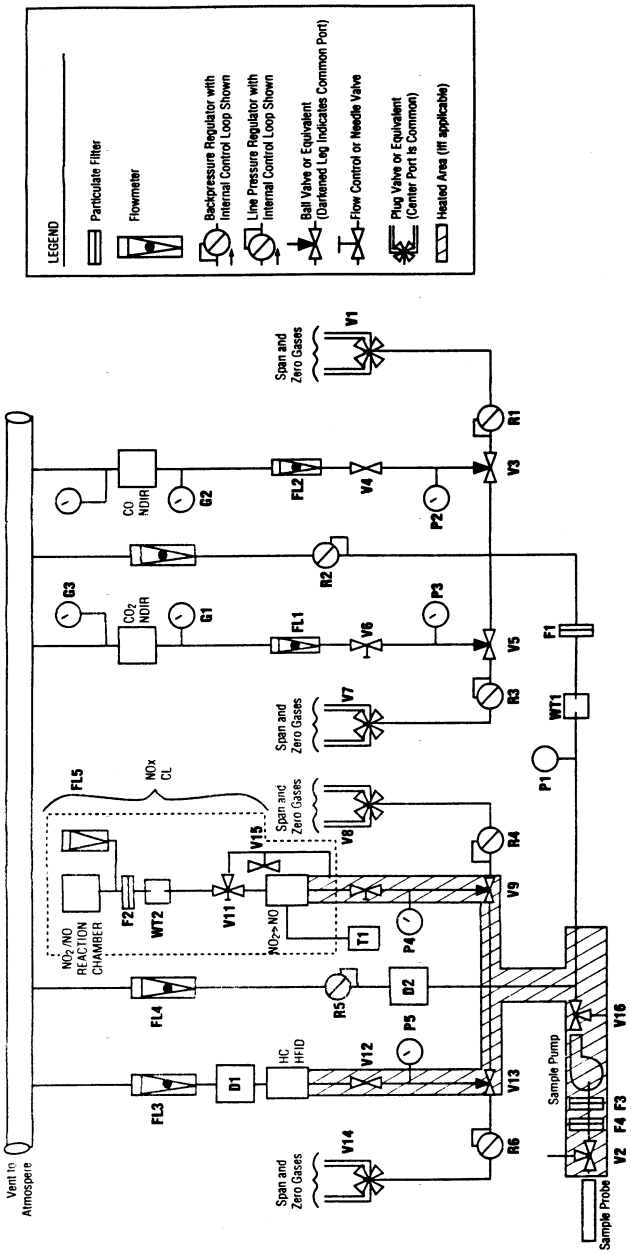

Figure 1. — Exhaust Gas Sampling and Analytical Train, Continuous Sampling

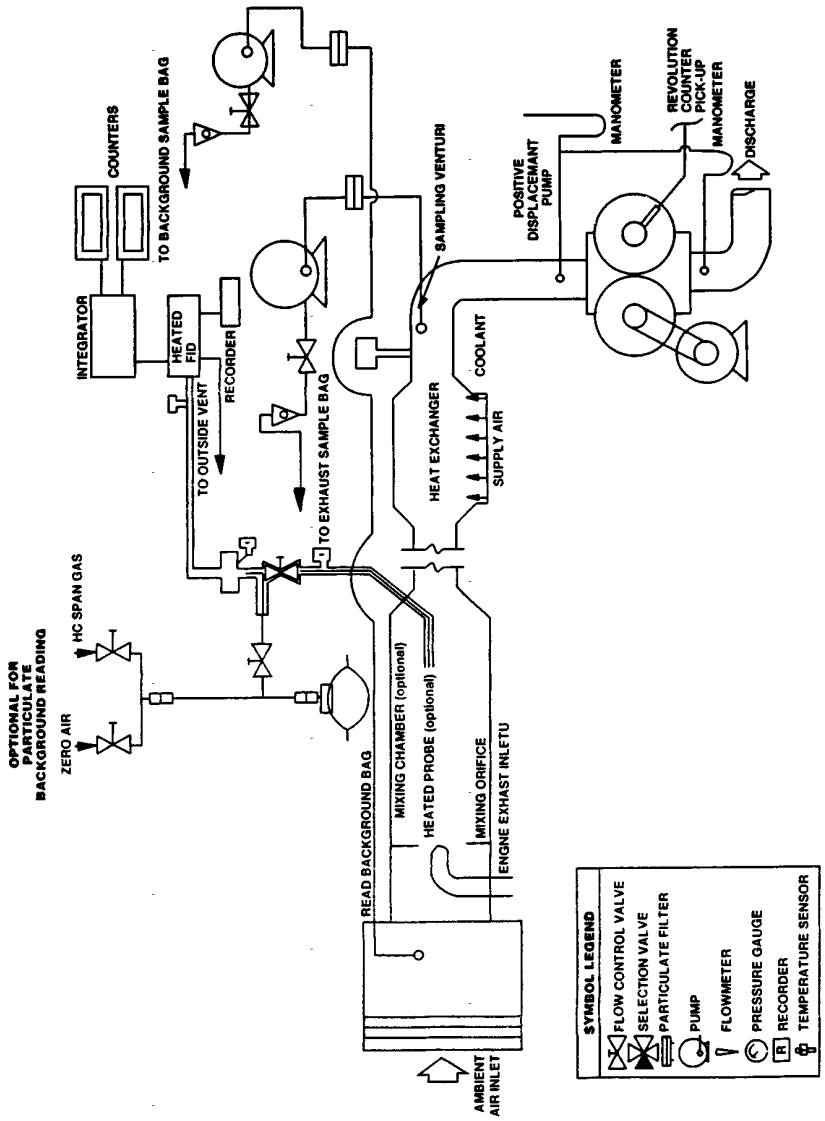

Figure 2 — Gaseous Emissions Sampling System (PDP-CVS) Showing both grab bag sampling and continous sampling

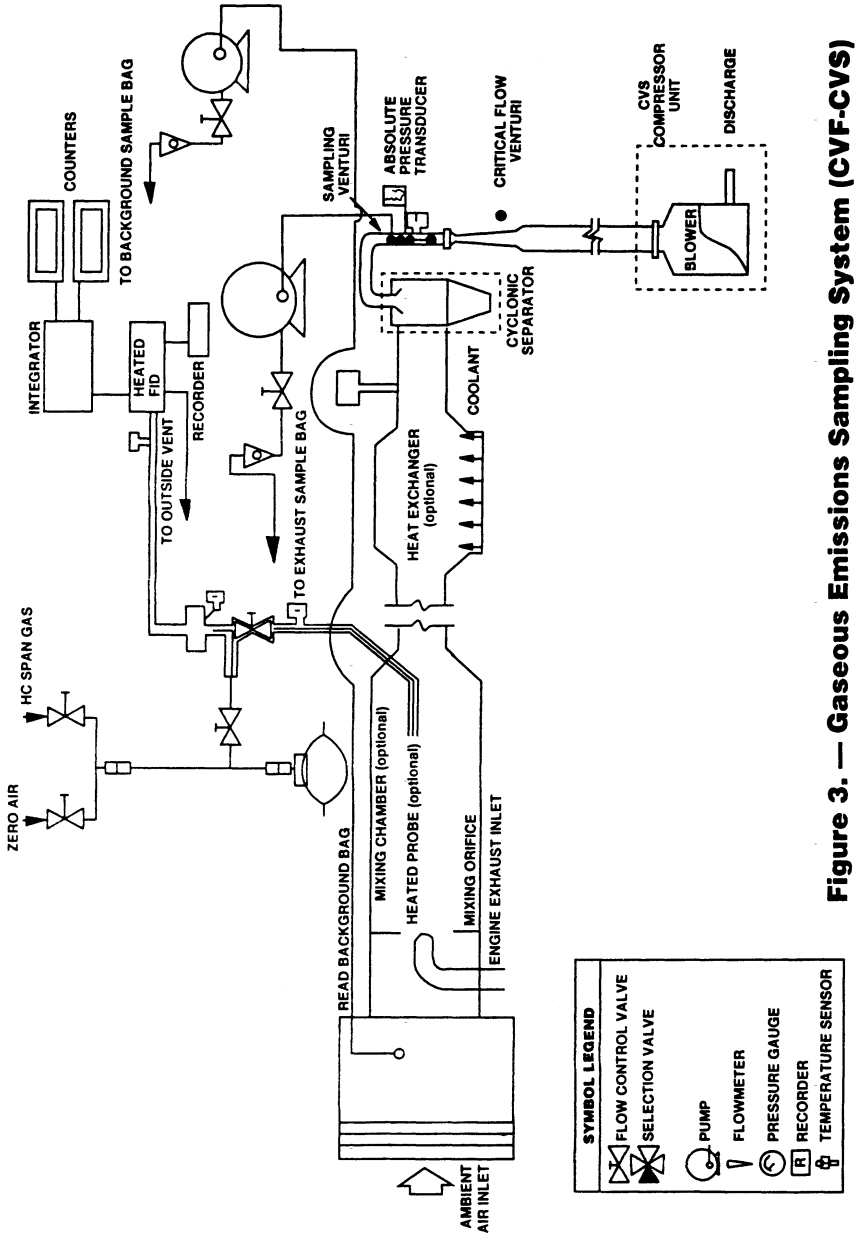

Figure 3. — Gaseous Emissions Sampling System (CVF-CVS)

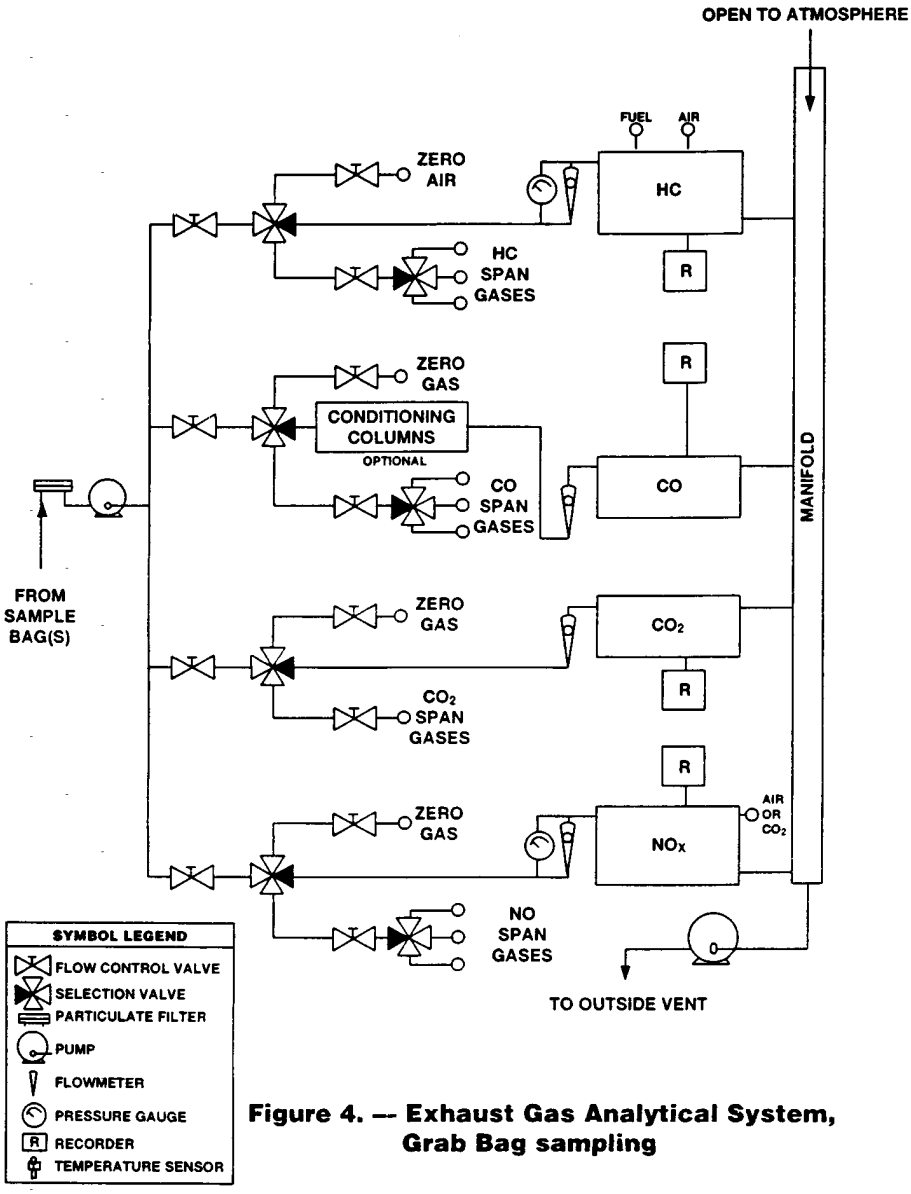

Figure 4. — Exhaust Gas Analytical System, Grab Bag sampling

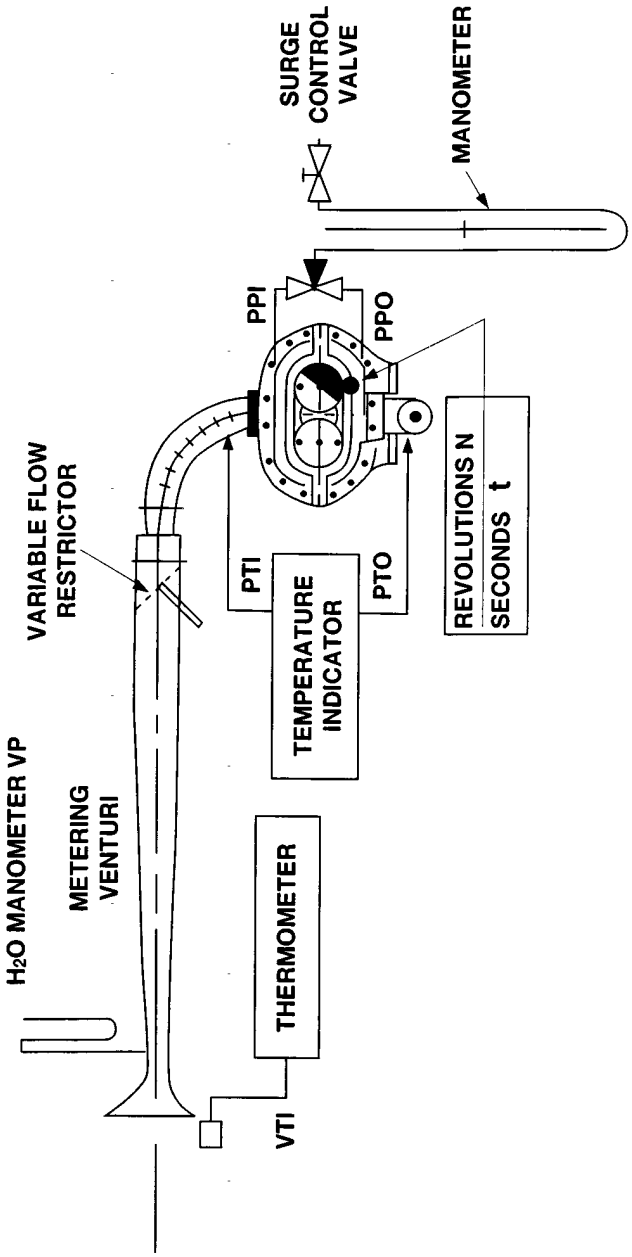

Figure 5. — PDP-CVS Calibration Configuration

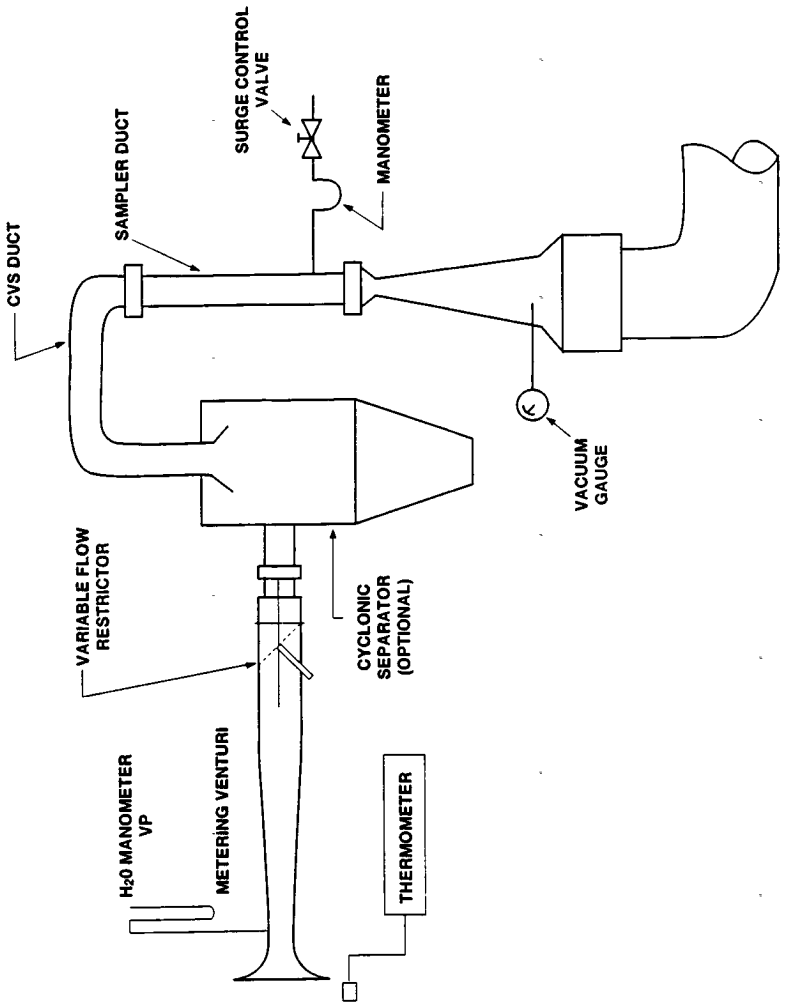

Figure 6. — CFV-CVS Calibration Configuration

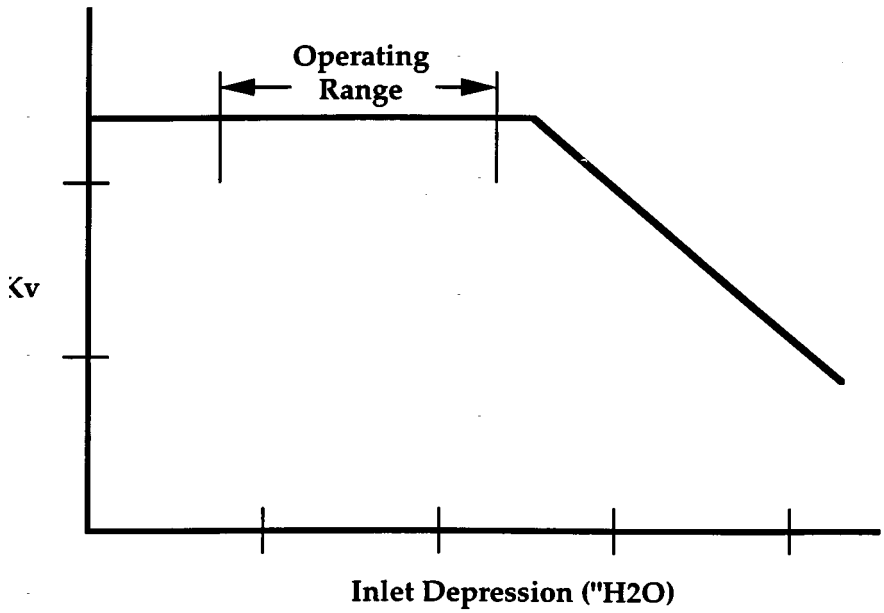

Figure 7.—Sonic Flow Choking

Subpart F—Selective Enforcement Auditing

§ 90.501 Applicability.

The requirements of subpart F shall be applicable to all nonroad engines and vehicles subject to the provisions of subpart A of part 90.

§ 90.502 Definitions.

The definitions in subpart A of this part apply to this subpart. The following definitions shall also apply to this subpart.

Acceptable quality level (AQL) means the maximum percentage of failing engines that can be considered a satisfactory process average for sampling inspections.

Configuration means any subclassification of an engine family which can be described on the basis of gross power, emission control system, governed speed, fuel system, engine calibration, and other parameters as designated by the Administrator.

Inspection criteria means the pass and fail numbers associated with a particular sampling plan.

Test engine means an engine in a test sample.

Test sample means the collection of engines selected from the population of an engine family for emission testing.

§ 90.503 Test orders.

(a) The Administrator shall require any testing under this subpart by means of a test order addressed to the manufacturer.

(b) The test order will be signed by the Assistant Administrator for Air and Radiation or his or her designee. The test order will be delivered in person by an EPA enforcement officer or EPA authorized representative to a company representative or sent by registered mail, return receipt requested, to the manufacturer's representative who signed the application for certification submitted by the manufacturer, pursuant to the requirements of the applicable section of subpart B of this part. Upon receipt of a test order, the manufacturer shall comply with all of the provisions of this subpart and instructions in the test order.

(c) *Information included in test order.* (1) The test order will specify the engine family to be selected for testing, the manufacturer's engine assembly plant or associated storage facility or port facility (for imported engines) from which the engines must be selected, the time and location at which engines must be selected, and the procedure by which engines of the specified family must be selected. The test order may specify the configuration to be audited and/or the number of engines to be selected per day. Engine manufacturers will be required to select a minimum of four engines per day unless an alternate selection procedure is approved pursuant to § 90.507(a), or unless total production of the specified configuration is less than four engines per day. If total production of the specified configuration is less than four engines per day, the manufacturer will select the actual number of engines produced per day.

(2) The test order may include alternate families to be selected for testing at the Administrator's discretion in the event that engines of the specified family are not available for testing because those engines are not being manufactured during the specified time, or are not being stored at the specified assembly plant, associated storage facilities or port of entry.

(3) If the specified family is not being manufactured at a rate of at least two engines per day in the case of manufacturers specified in § 90.508(g)(1), or one engine per day in the case of manufacturers specified in § 90.508(g)(2), over the expected duration of the audit, the Assistant Administrator or his or her designated representative may select engines of the alternate family for testing.

(4) In addition, the test order may include other directions or information essential to the administration of the required testing.

(d) A manufacturer may submit a list of engine families and the corresponding assembly plants, associated storage facilities, or (in the case of imported engines) port facilities from which the manufacturer prefers to have engines selected for testing in response to a test order. In order that a manufacturer's preferred location be considered for inclusion in a test order for a particular engine family, the list must be

submitted prior to issuance of the test order. Notwithstanding the fact that a manufacturer has submitted the list, the Administrator may order selection at other than a preferred location.

(e) Upon receipt of a test order, a manufacturer shall proceed in accordance with the provisions of this subpart.

(f)(1) During a given model year, the Administrator shall not issue to a manufacturer more Selective Enforcement Auditing (SEA) test orders than an annual limit determined by the following:

(i) for manufacturers with a projected annual production of less than 100,000 engines bound for the United States market for that model year, the number is two;

(ii) for manufacturers with a projected annual production of 100,000 or more engines bound for the United States market for that model year, by dividing the manufacturer's total number of certified engine families by five and rounding to the nearest whole number, unless the number of engine families is less than eight, in which case the number is two.

(2) If a manufacturer submits to EPA in writing prior to or during the model year a reliable sales projection update or adds engine families or deletes engine families from its production, that information will be used for recalculating the manufacturer's annual limit of SEA test orders.

(3) Any SEA test order for which the family fails under §90.510 or for which testing is not completed will not be counted against the annual limit.

(4) When the annual limit has been met, the Administrator may issue additional test orders to test those families for which evidence exists indicating noncompliance. An SEA test order issued on this basis will include a statement as to the reason for its issuance.

§90.504 Testing by the Administrator.

(a) The Administrator may require by test order under §90.503 that engines of a specified family be selected in a manner consistent with the requirements of §90.507 and submitted to the Administrator at the place designated for the purpose of conducting emission tests. These tests will be conducted in accordance with §90.508 to determine whether engines manufactured by the manufacturer conform with the regulations with respect to which the certificate of conformity was issued.

(b) *Designating official data.* (1) Whenever the Administrator conducts a test on a test engine or the Administrator and manufacturer each conduct a test on the same test engine, the results of the Administrator's test will comprise the official data for that engine.

(2) Whenever the manufacturer conducts all tests on a test engine, the manufacturer's test data will be accepted as the official data, provided that if the Administrator makes a determination based on testing conducted under paragraph (a) of this section that there is a substantial lack of agreement between the manufacturer's test results and the Administrator's test results, no manufacturer's test data from the manufacturer's test facility will be accepted for purposes of this subpart.

(c) If testing conducted under paragraph (a) of this section is unacceptable under §90.503, the Administrator shall:

(1) Notify the manufacturer in writing of the Administrator's determination that the test facility is inappropriate for conducting the tests required by this subpart and the reasons therefor; and

(2) Reinstate any manufacturer's data upon a showing by the manufacturer that the data acquired under paragraph (a) of this section was erroneous and the manufacturer's data was correct.

(d) The manufacturer may request in writing that the Administrator reconsider his or her determination in paragraph (b)(2) of this section based on data or information which indicates that changes have been made to the test facility and these changes have resolved the reasons for disqualification.

§90.505 Maintenance of records; submittal of information.

(a) The manufacturer of any new nonroad engine subject to any of the provisions of this subpart shall establish, maintain, and retain the following adequately organized and indexed records:

(1) *General records.* A description of all equipment used to test engines, as specified in subpart D of this part, in accordance with § 90.508 pursuant to a test order issued under this subpart.

(2) *Individual records.* These records pertain to each audit conducted pursuant to this subpart and shall include:

(i) The date, time, and location of each test;

(ii) The number of hours of service accumulated on the engine when the test began and ended;

(iii) The names of all supervisory personnel involved in the conduct of the audit;

(iv) A record and description of any repairs performed prior to and/or subsequent to approval by the Administrator, giving the date, associated time, justification, name(s) of the authorizing personnel, and names of all supervisory personnel responsible for the conduct of the repair;

(v) The date the engine was shipped from the assembly plant, associated storage facility or port facility and date the engine was received at the testing facility;

(vi) A complete record of all emission tests performed pursuant to this subpart (except tests performed directly by EPA), including all individual worksheets and/or other documentation relating to each test, or exact copies thereof, to be in accordance with the record requirements specified in §§ 90.405, 90.406, 90.418, and/or 90.425 as applicable.

(vii) A brief description of any significant audit events commencing with the test engine selection process, but not described under paragraph (a)(2) of this section, including such extraordinary events as engine damage during shipment.

(3) The manufacturer shall record test equipment description, pursuant to paragraph (a)(1) of this section, for each test cell that can be used to perform emission testing under this subpart.

(b) The manufacturer shall retain all records required to be maintained under this subpart for a period of one year after completion of all testing in response to a test order. Records may be retained as hard copy or reduced to microfilm, floppy disc, and so forth, depending upon the manufacturer's record retention procedure, provided that in every case all the information contained in the hard copy is retained.

(c) The manufacturer shall, upon request by the Administrator, submit the following information with regard to engine production:

(1) Projected U.S. sales data for each engine configuration within each engine family for which certification is requested;

(2) Number of engines, by configuration and assembly plant, scheduled for production for the time period designated in the request;

(3) Number of engines, by configuration and by assembly plant, storage facility or port facility, scheduled to be stored at facilities for the time period designated in the request; and

(4) Number of engines, by configuration and assembly plant, produced during the time period designated in the request that are complete for introduction into commerce.

(d) Nothing in this section limits the Administrator's discretion in requiring the manufacturer to retain additional records or submit information not specifically required by this section.

(e) The manufacturer shall address all reports, submissions, notifications, and requests for approvals made under this subpart to: Director, Manufacturers Operations Division, U.S. Environmental Protection Agency, 6405–J, 401 M Street S.W., Washington, D.C. 20460.

§ 90.506 Right of entry and access.

(a) To allow the Administrator to determine whether a manufacturer is complying with the provisions of this subpart, a test order is issued which authorizes EPA enforcement officers or their authorized representatives upon presentation of credentials to enter during operating hours any of the following places:

(1) Any facility where any engine to be introduced into commerce, including ports of entry, or any emission-related component is manufactured, assembled, or stored;

(2) Any facility where any tests conducted pursuant to a test order or any procedures or activities connected with these tests are or were performed;

(3) Any facility where any engine which is being tested, was tested, or will be tested is present; and

(4) Any facility where any record or other document relating to any of the above is located.

(b) Upon admission to any facility referred to in paragraph (a) of this section, EPA enforcement officers or EPA authorized representatives are authorized to perform the following inspection-related activities:

(1) To inspect and monitor any aspects of engine assembly, storage, testing and other procedures, and the facilities in which these procedures are conducted;

(2) To inspect and monitor any aspect of engine test procedures or activities, including, but not limited to, engine selection, preparation, service accumulation, emission test cycles, and maintenance and verification of test equipment calibration;

(3) To inspect and make copies of any records or documents related to the assembly, storage, selection and testing of an engine in compliance with a test order; and

(4) To inspect and photograph any part or aspect of any engine and any component used in the assembly thereof that is reasonably related to the purpose of the entry.

(c) EPA enforcement officers or EPA authorized representatives are authorized to obtain reasonable assistance without cost from those in charge of a facility to help the officers perform any function listed in this subpart, and they are authorized to request the recipient of a test order to make arrangements with those in charge of a facility operated for the manufacturer's benefit to furnish reasonable assistance without cost to EPA, whether or not the recipient controls the facility.

(1) Reasonable assistance includes, but is not limited to, clerical, copying, interpretation and translation services, the making available on an EPA enforcement officer's or EPA authorized representative's request of personnel of the facility being inspected during their working hours to inform the EPA enforcement officer or EPA authorized representative of how the facility operates and to answer the officer's questions, and the performance on request of emission tests on any engine which is being, has been, or will be used for SEA testing.

(2) A manufacturer may be compelled to cause the personal appearance of any employee at such a facility before an EPA enforcement officer or EPA authorized representative by written request for his or her appearance, signed by the Assistant Administrator for Air and Radiation, served on the manufacturer. Any such employee who has been instructed by the manufacturer to appear will be entitled to be accompanied, represented, and advised by counsel.

(d) EPA enforcement officers or EPA authorized representatives are authorized to seek a warrant or court order authorizing the EPA enforcement officers or EPA authorized representatives to conduct activities related to entry and access as authorized in this section, as appropriate, to execute the functions specified in this section. EPA enforcement officers or authorized representatives may proceed ex parte to obtain a warrant whether or not the EPA enforcement officers or EPA authorized representatives first attempted to seek permission of the recipient of the test order or the party in charge of the facilities in question to conduct activities related to entry and access as authorized in this section.

(e) A recipient of a test order shall permit an EPA enforcement officer(s) or EPA authorized representative(s) who presents a warrant or court order to conduct activities related to entry and access as authorized in this section and as described in the warrant or court order. The recipient shall also cause those in charge of its facility or a facility operated for its benefit to permit entry and access as authorized in this section pursuant to a warrant or court order whether or not the recipient controls the facility. In the absence of a warrant or court order, an EPA enforcement officer(s) or EPA authorized representative(s) may conduct activities related to entry and access as authorized in this section only upon the consent of the recipient of the test order or the party in charge of the facilities in question.

(f) It is not a violation of this part or of the Clean Air Act for any person to

refuse to permit an EPA enforcement officer(s) or an EPA authorized representative(s) to conduct activities related to entry and access as authorized in this section if the officer or representative appears without a warrant or court order.

(g) A manufacturer is responsible for locating its foreign testing and manufacturing facilities in jurisdictions in which local foreign law does not prohibit an EPA enforcement officer(s) or an EPA authorized representative(s) from conducting the entry and access activities specified in this section. EPA will not attempt to make any inspections which it has been informed that local foreign law prohibits.

§ 90.507 Sample selection.

(a) Engines comprising a test sample will be selected at the location and in the manner specified in the test order. If a manufacturer determines that the test engines cannot be selected in the manner specified in the test order, an alternative selection procedure may be employed, provided the manufacturer requests approval of the alternative procedure prior to the start of test sample selection, and the Administrator approves the procedure.

(b) The manufacturer shall assemble the test engines of the family selected for testing using its normal mass production process for engines to be distributed into commerce. If, between the time the manufacturer is notified of a test order and the time the manufacturer finishes selecting test engines, the manufacturer implements any change(s) in its production processes, including quality control, which may reasonably be expected to affect the emissions of the engines selected, then the manufacturer shall, during the audit, inform the Administrator of such changes. If the test engines are selected at a location where they do not have their operational and emission control systems installed, the test order will specify the manner and location for selection of components to complete assembly of the engines. The manufacturer shall assemble these components onto the test engines using normal assembly and quality control procedures as documented by the manufacturer.

(c) No quality control, testing, or assembly procedures will be used on the test engine or any portion thereof, including parts and subassemblies, that have not been or will not be used during the production and assembly of all other engines of that family, unless the Administrator approves the modification in assembly procedures pursuant to paragraph (b) of this section.

(d) The test order may specify that an EPA enforcement officer(s) or authorized representative(s), rather than the manufacturer, select the test engines according to the method specified in the test order.

(e) The order in which test engines are selected determines the order in which test results are to be used in applying the sampling plan in accordance with § 90.510.

(f) The manufacturer shall keep on hand all untested engines, if any, comprising the test sample until a pass or fail decision is reached in accordance with § 90.510(e). The manufacturer may ship any tested engine which has not failed in accordance with § 90.510(b). However, once the manufacturer ships any test engine, it relinquishes the prerogative to conduct retests as provided in § 90.508(i).

§ 90.508 Test procedures.

(a) For nonroad engines subject to the provisions of this subpart, the prescribed test procedures are the appropriate small SI engine test procedures as described in subpart E of this part.

(b)(1) The manufacturer shall not adjust, repair, prepare, or modify the engines selected for testing and shall not perform any emission tests on engines selected for testing pursuant to the test order unless this adjustment, repair, preparation, modification, and/or tests are documented in the manufacturer's engine assembly and inspection procedures and are actually performed or unless these adjustments and/or tests are required or permitted under this subpart or are approved in advance by the Administrator.

(2) The Administrator may adjust or cause to be adjusted any engine parameter which the Administrator has determined to be subject to adjustment for certification and Selective Enforcement Audit testing in accordance with

§ 90.112(c), to any setting within the physically adjustable range of that parameter, as determined by the Administrator in accordance with § 90.112(a), prior to the performance of any tests. However, if the idle speed parameter is one which the Administrator has determined to be subject to adjustment, the Administrator shall not adjust it to any setting which causes a lower engine idle speed than would have been possible within the physically adjustable range of the idle speed parameter if the manufacturer had accumulated 12 hours of service on the engine under paragraph (c) of this section, all other parameters being identically adjusted for the purpose of the comparison. The manufacturer may be requested to supply information needed to establish an alternate minimum idle speed. The Administrator, in making or specifying these adjustments, may consider the effect of the deviation from the manufacturer's recommended setting on emission performance characteristics as well as the likelihood that similar settings will occur on in-use engines. In determining likelihood, the Administrator may consider factors such as, but not limited to, the effect of the adjustment on engine performance characteristics and surveillance information from similar in-use engines.

(c) *Service Accumulation*. Prior to performing exhaust emission testing on an SEA test engine, the manufacturer may accumulate on each engine a number of hours of service equal to the greater of 12 hours or the number of hours the manufacturer accumulated during certification on the emission data engine corresponding to the family specified in the test order.

(1) Service accumulation must be performed in a manner using good engineering judgment to obtain emission results representative of normal production engines. This service accumulation must be consistent with the new engine break-in instructions contained in the applicable owner's manual.

(2) The manufacturer shall accumulate service at a minimum rate of 12 hours per engine during each 24-hour period, unless otherwise approved by the Administrator.

(i) The first 24 hour period for service shall begin as soon as authorized checks, inspections, and preparations are completed on each engine.

(ii) The minimum service or mileage accumulation rate does not apply on weekends or holidays.

(iii) If the manufacturer's service or target is less than the minimum rate specified (12 hours per day), then the minimum daily accumulation rate shall be equal to the manufacturer's service target.

(3) Service accumulation shall be completed on a sufficient number of test engines during consecutive 24-hour periods to assure that the number of engines tested per day fulfills the requirements of paragraphs (g)(1) and (g)(2) of this section.

(d) The manufacturer shall not perform any maintenance on test engines after selection for testing, nor shall the Administrator allow deletion of any engine from the test sequence, unless requested by the manufacturer and approved by the Administrator before any engine maintenance or deletion.

(e) The manufacturer shall expeditiously ship test engines from the point of selection to the test facility. If the test facility is not located at or in close proximity to the point of selection, the manufacturer shall assure that test engines arrive at the test facility within 24 hours of selection, except that the Administrator may approve more time for shipment based upon a request by the manufacturer accompanied by a satisfactory justification.

(f) If an engine cannot complete the service accumulation or an emission test because of a malfunction, the manufacturer may request that the Administrator authorize either the repair of that engine or its deletion from the test sequence.

(g) Whenever a manufacturer conducts testing pursuant to a test order issued under this subpart, the manufacturer shall notify the Administrator within one working day of receipt of the test order as to which test facility will be used to comply with the test order. If no test cells are available at a desired facility, the manufacturer must provide alternate testing capability satisfactory to the Administrator.

(1) A manufacturer with projected nonroad engine sales for the United

States market for the applicable year of 7,500 or greater shall complete emission testing at a minimum rate of two engines per 24-hour period, including each voided test.

(2) A manufacturer with projected nonroad engine sales for the United States market for the applicable year of less than 7,500 shall complete emission testing at a minimum rate of one engine per 24-hour period, including each voided test.

(3) The Administrator may approve a lower daily rate of emission testing based upon a request by a manufacturer accompanied by a satisfactory justification.

(h) The manufacturer shall perform test engine selection, shipping, preparation, service accumulation, and testing in such a manner as to assure that the audit is performed in an expeditious manner.

(i) *Retesting.* (1) The manufacturer may retest any engines tested during a Selective Enforcement Audit once a fail decision for the audit has been reached in accordance with § 90.510(e).

(2) The Administrator may approve retesting at other times based upon a request by the manufacturer accompanied by a satisfactory justification.

(3) The manufacturer may retest each engine a total of three times. The manufacturer shall test each engine or vehicle the same number of times. The manufacturer may accumulate additional service before conducting a retest, subject to the provisions of paragraph (c) of this section.

(j) A manufacturer may test engines with the test procedure specified in subpart E of this part to demonstrate compliance with the exhaust emission standards; however, if alternate procedures were used in certification pursuant to § 90.120, then those alternate procedures shall be used.

§ 90.509 Calculation and reporting of test results.

(a) Initial test results are calculated following the applicable test procedure specified in paragraph (a) of § 90.508. The manufacturer shall round these results, in accordance with ASTM E29–93a, to the number of decimal places contained in the applicable emission standard expressed to one additional significant figure. ASTM E29–93a has been incorporated by reference. See § 90.7.

(b) Final test results are calculated by summing the initial test results derived in paragraph (a) of this section for each test engine, dividing by the number of tests conducted on the engine, and rounding in accordance with ASTM E29–93a to the same number of decimal places contained in the applicable standard expressed to one additional significant figure.

(c) Within five working days after completion of testing of all engines pursuant to a test order, the manufacturer shall submit to the Administrator a report which includes the following information:

(1) The location and description of the manufacturer's exhaust emission test facilities which were utilized to conduct testing reported pursuant to this section;

(2) The applicable standards or compliance levels against which the engines were tested;

(3) A description of the engine and its associated emission-related component selection method used;

(4) For each test conducted;

(i) Test engine description, including:

(A) Configuration and engine family identification;

(B) Year, make and build date;

(C) Engine identification number; and

(D) Number of hours of service accumulated on engine prior to testing;

(ii) Location where service accumulation was conducted and description of accumulation procedure and schedule;

(iii) Test number, date, test procedure used, initial test results before and after rounding and final test results for all exhaust emission tests, whether valid or invalid, and the reason for invalidation, if applicable;

(iv) A complete description of any modification, repair, preparation, maintenance, and/or testing which was performed on the test engine and has not been reported pursuant to any other paragraph of this subpart and will not be performed on all other production engines;

(v) Where an engine was deleted from the test sequence by authorization of

the Administrator, the reason for the deletion;

(vi) Any other information the Administrator may request relevant to the determination as to whether the new engines being manufactured by the manufacturer do in fact conform with the regulations with respect to which the certificate of conformity was issued; and

(5) The following statement and endorsement:

This report is submitted pursuant to sections 213 and 208 of the Clean Air Act. This Selective Enforcement Audit was conducted in complete conformance with all applicable regulations under 40 CFR part 90 *et seq.* and the conditions of the test order. No emission-related changes to production processes or quality control procedures for the engine family tested have been made between receipt of the test order and conclusion of the audit. All data and information reported herein is, to the best of (Company Name) knowledge, true and accurate. I am aware of the penalties associated with violations of the Clean Air Act and the regulations thereunder. (Authorized Company Representative.)

§90.510 Compliance with acceptable quality level and passing and failing criteria for selective enforcement audits.

(a) The prescribed acceptable quality level is 40 percent.

(b) A failed engine is one whose final test results pursuant to §90.509(b), for one or more of the applicable pollutants, exceed the applicable emission standard.

(c) The manufacturer shall test engines comprising the test sample until a pass decision is reached for all pollutants or a fail decision is reached for one pollutant. A pass decision is reached when the cumulative number of failed engines, as defined in paragraph (b) of this section, for each pollutant is less than or equal to the pass decision number, as defined in paragraph (d) of this section, appropriate to the cumulative number of engines tested. A fail decision is reached when the cumulative number of failed engines for one or more pollutants is greater than or equal to the fail decision number, as defined in paragraph (d) of this section, appropriate to the cumulative number of engines tested.

(d) The pass and fail decision numbers associated with the cumulative number of engines tested are determined by using the tables in Appendix A to this subpart, ''Sampling Plans for Selective Enforcement Auditing of Small Nonroad Engines,'' appropriate to the projected sales as made by the manufacturer in its report to EPA under §90.505(c)(1). In the tables in Appendix A to this subpart, sampling plan ''stage'' refers to the cumulative number of engines tested. Once a pass or fail decision has been made for a particular pollutant, the number of engines with final test results exceeding the emission standard for that pollutant shall not be considered any further for the purposes of the audit.

(e) Passing or failing of an SEA occurs when the decision is made on the last engine test required to make a decision under paragraph (c) of this section.

(f) The Administrator may terminate testing earlier than required in paragraph (c) of this section.

§90.511 Suspension and revocation of certificates of conformity.

(a) The certificate of conformity is suspended with respect to any engine failing pursuant to §90.510(b) effective from the time that testing of that engine is completed.

(b) The Administrator may suspend the certificate of conformity for a family which does not pass an SEA, pursuant to paragraph §90.510(c), based on the first test or all tests conducted on each engine. This suspension will not occur before ten days after failure of the audit.

(c) If the results of testing pursuant to these regulations indicate that engines of a particular family produced at one plant of a manufacturer do not conform to the regulations with respect to which the certificate of conformity was issued, the Administrator may suspend the certificate of conformity with respect to that family for engines manufactured by the manufacturer at all other plants.

(d) Notwithstanding the fact that engines described in the application may

be covered by a certificate of conformity, the Administrator may suspend such certificate in whole or in part if the Administrator finds any one of the following infractions to be substantial:

(1) The manufacturer refuses to comply with the provisions of a test order issued by the Administrator under § 90.503.

(2) The manufacturer refuses to comply with any of the requirements of this subpart.

(3) The manufacturer submits false or incomplete information in any report or information provided to the Administrator under this subpart.

(4) The manufacturer renders inaccurate any test data submitted under this subpart.

(5) An EPA enforcement officer or EPA authorized representative is denied the opportunity to conduct activities related to entry and access as authorized in this subpart and a warrant or court order is presented to the manufacturer or the party in charge of a facility in question.

(6) An EPA enforcement officer or EPA authorized representative is unable to conduct activities related to entry and access as authorized in § 90.506 because a manufacturer has located a facility in a foreign jurisdiction where local law prohibits those activities.

(e) The Administrator shall notify the manufacturer in writing of any suspension or revocation of a certificate of conformity in whole or in part, except that the certificate is immediately suspended with respect to any failed engines as provided for in paragraph (a) of this section.

(f) The Administrator may revoke a certificate of conformity for a family when the certificate has been suspended pursuant to paragraph (b) or (c) of this section if the proposed remedy for the nonconformity, as reported by the manufacturer to the Administrator, is one requiring a design change or changes to the engine and/or emission control system as described in the application for certification of the affected family.

(g) Once a certificate has been suspended for a failed engine, as provided for in paragraph (a) of this section, the manufacturer shall take the following actions:

(1) Before the certificate is reinstated for that failed engine;

(i) Remedy the nonconformity; and

(ii) Demonstrate that the engine conforms to applicable standards by retesting the engine in accordance with these regulations.

(2) Submit a written report to the Administrator, after successful completion of testing on the failed engine, which contains a description of the remedy and test results for each engine in addition to other information that may be required by this regulation.

(h) Once a certificate for a failed family has been suspended pursuant to paragraph (b) or (c) of this section, the manufacturer shall take the following actions before the Administrator will consider reinstating the certificate:

(1) Submit a written report to the Administrator which identifies the reason for the noncompliance of the engines, describes the proposed remedy, including a description of any proposed quality control and/or quality assurance measures to be taken by the manufacturer to prevent future occurrences of the problem, and states the date on which the remedies will be implemented.

(2) Demonstrate that the engine family for which the certificate of conformity has been suspended does in fact comply with these regulations by testing engines selected from normal production runs of that engine family, at the plant(s), port facility(ies) or associated storage facility(ies) specified by the Administrator, in accordance with the conditions specified in the initial test order. If the manufacturer elects to continue testing individual engines after suspension of a certificate, the certificate is reinstated for an engine actually determined to be in conformance with the applicable standards through testing in accordance with the applicable test procedures, provided that the Administrator has not revoked the certificate pursuant to paragraph (f) of this section.

(i) Once the certificate has been revoked for a family and the manufacturer desires to continue introduction into commerce of a modified version of that family, the following actions shall

be taken before the Administrator may consider issuing a certificate for that modified family:

(1) If the Administrator determines that the proposed change(s) in engine design may have an effect on emission performance deterioration, the Administrator shall notify the manufacturer, within five working days after receipt of the report in paragraph (f) of this section, whether subsequent testing under this subpart will be sufficient to evaluate the proposed change or changes or whether additional testing will be required; and

(2) After implementing the change or changes intended to remedy the nonconformity, the manufacturer shall demonstrate that the modified engine family does in fact conform with these regulations by testing engines selected from normal production runs of that modified engine family in accordance with the conditions specified in the initial test order. If the subsequent audit results in passing of the audit, the Administrator shall reissue the certificate or issue a new certificate, as the case may be, to include that family, provided that the manufacturer has satisfied the testing requirements of paragraph (i)(1) of this section. If the subsequent audit is failed, the revocation remains in effect. Any design change approvals under this subpart are limited to the family affected by the test order.

(j) At any time subsequent to an initial suspension of a certificate of conformity for a test engine pursuant to paragraph (a) of this section, but not later than 15 days or such other period as may be allowed by the Administrator after notification of the Administrator's decision to suspend or revoke a certificate of conformity in whole or in part pursuant to paragraphs (b), (c), or (f) of this section, a manufacturer may request a hearing as to whether the tests have been properly conducted or any sampling methods have been properly applied.

(k) Any suspension of a certificate of conformity under paragraph (d) of this section shall:

(1) Be made only after the manufacturer concerned has been offered an opportunity for a hearing conducted in accordance with §§90.512, 90.513, and 90.514 and

(2) Not apply to engines no longer in the possession of the manufacturer.

(l) After the Administrator suspends or revokes a certificate of conformity pursuant to this section and prior to the commencement of a hearing under §90.512, if the manufacturer demonstrates to the Administrator's satisfaction that the decision to suspend, revoke, or void the certificate was based on erroneous information, the Administrator shall reinstate the certificate.

(m) To permit a manufacturer to avoid storing non-test engines when conducting an audit of a family subsequent to a failure of an SEA and while reauditing the failed family it may request that the Administrator conditionally reinstate the certificate for that family. The Administrator may reinstate the certificate subject to the condition that the manufacturer commits to recall all engines of that family produced from the time the certificate is conditionally reinstated if the family fails the subsequent audit at the level of the standard and to remedy any nonconformity at no expense to the owner.

§90.512 Request for public hearing.

(a) If the manufacturer disagrees with the Administrator's decision to suspend, revoke or void a certificate or disputes the basis for an automatic suspension pursuant to §90.511(a), the manufacturer may request a public hearing.

(b) The manufacturer's request shall be filed with the Administrator not later than 15 days after the Administrator's notification of his or her decision to suspend or revoke, unless otherwise specified by the Administrator. The manufacturer shall simultaneously serve two copies of this request upon the Director of the Manufacturers Operations Division and file two copies with the Hearing Clerk of the Agency. Failure of the manufacturer to request a hearing within the time provided constitutes a waiver of the right to a hearing. Subsequent to the expiration of the period for requesting a hearing as of right, the Administrator may, in his or her discretion and for good cause

shown, grant the manufacturer a hearing to contest the suspension or revocation.

(c) A manufacturer shall include in the request for a public hearing:

(1) A statement as to which engine configuration(s) within a family is to be the subject of the hearing;

(2) A concise statement of the issues to be raised by the manufacturer at the hearing, except that in the case of the hearing requested under § 90.511(j), the hearing is restricted to the following issues:

(i) Whether tests have been properly conducted (specifically, whether the tests were conducted in accordance with applicable regulations under this part and whether test equipment was properly calibrated and functioning);

(ii) Whether sampling plans have been properly applied (specifically, whether sampling procedures specified in Appendix A of this subpart were followed and whether there exists a basis for distinguishing engines produced at plants other than the one from which engines were selected for testing which would invalidate the Administrator's decision under § 90.511(c));

(3) A statement specifying reasons why the manufacturer believes it will prevail on the merits of each of the issues raised; and

(4) A summary of the evidence which supports the manufacturer's position on each of the issues raised.

(d) A copy of all requests for public hearings will be kept on file in the Office of the Hearing Clerk and will be made available to the public during Agency business hours.

§ 90.513 Administrative procedures for public hearing.

(a) The Presiding Officer shall be an Administrative Law Judge appointed pursuant to 5 U.S.C. 3105 (see also 5 CFR part 930 as amended).

(b) The Judicial Officer shall be an officer or employee of the Agency appointed as a Judicial Officer by the Administrator, pursuant to this section, who shall meet the qualifications and perform functions as follows:

(1) *Qualifications.* A Judicial Officer may be a permanent or temporary employee of the Agency who performs other duties for the Agency. The Judicial Officer shall not be employed by the Office of Enforcement or have any connection with the preparation or presentation of evidence for a hearing held pursuant to this subpart. The Judicial Officer shall be a graduate of an accredited law school and a member in good standing of a recognized Bar Association of any state or the District of Columbia.

(2) *Functions.* The Administrator may consult with the Judicial Officer or delegate all or part of the Administrator's authority to act in a given case under this section to a Judicial Officer, provided that this delegation does not preclude the Judicial Officer from referring any motion or case to the Administrator when the Judicial Officer determines such referral to be appropriate.

(c) For the purposes of this section, one or more Judicial Officers may be designated. As work requires, a Judicial Officer may be designated to act for the purposes of a particular case.

(d) *Summary decision.* (1) In the case of a hearing requested under § 90.511(j), when it clearly appears from the data and other information contained in the request for a hearing that no genuine and substantial question of fact exists with respect to the issues specified in § 90.512(c)(2), the Administrator shall enter an order denying the request for a hearing and reaffirming the original decision to suspend or revoke a certificate of conformity, if this decision has been made pursuant to § 90.511(e) at any time prior to the decision to deny the request for a hearing.

(2) In the case of a hearing requested under § 90.512 to challenge a proposed suspension of a certificate of conformity for the reasons specified in § 90.511(d), when it clearly appears from the data and other information contained in the request for the hearing that no genuine and substantial question of fact exists with respect to the issue of whether the refusal to comply with the provisions of a test order or any other requirement of § 90.503 was caused by conditions and circumstances outside the control of the manufacturer, the Administrator shall enter an order denying the request for a hearing and suspending the certificate of conformity.

(3) Any order issued under paragraph (d)(1) or (d)(2) of this section has the force and effect of a final decision of the Administrator, as issued pursuant to §90.515.

(4) If the Administrator determines that a genuine and substantial question of fact does exist with respect to any of the issues referred to in paragraphs (d)(1) and (d)(2) of this section, the Administrator shall grant the request for a hearing and publish a notice of public hearing in the FEDERAL REGISTER or by such other means as the Administrator finds appropriate to provide notice to the public.

(e) *Filing and service.* (1) An original and two copies of all documents or papers required or permitted to be filed pursuant to this section and §90.512(c) must be filed with the Hearing Clerk of the Agency. Filing is considered timely if mailed, as determined by the postmark, to the Hearing Clerk within the time allowed by this section and §90.512(b). If filing is to be accomplished by mailing, the documents must be sent to the address set forth in the notice of public hearing referred to in paragraph (d)(4) of this section.

(2) To the maximum extent possible, testimony will be presented in written form. Copies of written testimony will be served upon all parties as soon as practicable prior to the start of the hearing. A certificate of service will be provided on or accompany each document or paper filed with the Hearing Clerk. Documents to be served upon the Director of the Manufacturers Operations Division must be sent by registered mail to: Director, Manufacturers Operations Division, U.S. Environmental Protection Agency, 6405–J, 401 M Street S.W., Washington, D.C. 20460. Service by registered mail is complete upon mailing.

(f) *Computation of time.* (1) In computing any period of time prescribed or allowed by this section, except as otherwise provided, the day of the act or event from which the designated period of time begins to run is not included. Saturdays, Sundays, and federal legal holidays are included in computing the period allowed for the filing of any document or paper, except that when the period expires on a Saturday, Sunday, or federal legal holiday, the period is extended to include the next following business day.

(2) A prescribed period of time within which a party is required or permitted to do an act is computed from the time of service, except that when service is accomplished by mail, three days will be added to the prescribed period.

(g) *Consolidation.* The Administrator or the Presiding Officer in his or her discretion may consolidate two or more proceedings to be held under this section for the purpose of resolving one or more issues whenever it appears that consolidation will expedite or simplify consideration of these issues. Consolidation does not affect the right of any party to raise issues that could have been raised if consolidation had not occurred.

(h) *Hearing date.* To the extent possible, hearings under §90.512 will be scheduled to commence within 14 days of receipt of the application in §90.512.

§90.514 Hearing procedures.

The procedures provided in §86.1014–84 (i) to (s) apply for hearings requested pursuant to §90.512, suspension, revocation, or voiding of a certificate of conformity.

§90.515 Appeal of hearing decision.

The procedures provided in §86.1014–84 (t) to (aa) apply for appeals filed with respect to hearings held pursuant to §90.514.

§90.516 Treatment of confidential information.

The provisions for treatment of confidential information described in §90.4 apply to this subpart.

APPENDIX A TO SUBPART F OF PART 90—SAMPLING PLANS FOR SELECTIVE ENFORCEMENT AUDITING OF SMALL NONROAD ENGINES

TABLE 1.—SAMPLING PLAN CODE LETTER

Annual engine family sales	Code letter
50–99	A
100–299	B
300–499	C
500 or greater	D

TABLE 2.—SAMPLE PLAN FOR CODE LETTER ''A''

[Sample inspection criteria]

Stage	Pass No.	Fail No.	Stage	Pass No.	Fail No.1
1	(1)	(2)	16	6	11
2	(1)	(2)	17	7	12
3	(1)	(2)	18	7	12
4	0	(2)	19	8	13
5	0	(2)	20	8	13
6	1	6	21	9	14
7	1	7	22	10	14
8	2	7	23	10	15
9	2	8	24	11	15
10	3	8	25	11	16
11	3	8	26	12	16
12	4	9	27	12	17
13	5	10	28	13	17
14	5	10	29	14	17
15	6	11	30	16	17

[1] Test sample passing not permitted at this stage.
[2] Test sample failure not permitted at this stage.

TABLE 3.—SAMPLING PLAN FOR CODE LETTER ''B''

[Sample Inspection Criteria]

Stage	Pass No.	Fail No.
1	(1)	(2)
2	(1)	(2)
3	(1)	(2)
4	(1)	(2)
5	0	(2)
6	1	6
7	1	7
8	2	7
9	2	8
10	3	8
11	3	9
12	4	9
13	4	10
14	5	10
15	5	11
16	6	12
17	6	12
18	7	13
19	8	13
10	8	14
21	9	14
22	9	15
23	10	15
24	10	16
25	11	16
26	11	17
27	12	17
28	12	18
29	13	18
30	13	19
31	14	19
32	14	20
33	15	20
34	16	21
35	16	21
36	17	22
37	17	22
38	18	22
39	18	22
40	21	22

[1] Test sample passing not permitted at this stage.
[2] Test sample failure not permitted at this stage.

TABLE 4.—SAMPLING PLAN FOR CODE LETTER ''C''

[Sample Inspection Criteria]

Stage	Pass No.	Fail No.
1	(1)	(2)
2	(1)	(2)
3	(1)	(2)
4	(1)	(2)
5	0	(2)
6	0	6
7	1	7
8	2	7
9	2	8
10	3	9
11	3	9
12	4	10
13	4	10
14	5	11
15	5	11
16	6	12
17	6	12
18	7	13
19	7	13
20	8	14
21	8	14
22	9	15
23	10	15
24	10	16
25	11	16
26	11	17
27	12	17
28	12	18
29	13	18
30	13	19
31	14	19
32	14	20
33	15	20
34	15	21
35	16	21
36	16	22
37	17	22
38	18	23
39	18	23
40	19	24
41	19	24
42	20	25
43	20	25
44	21	26

TABLE 4.—SAMPLING PLAN FOR CODE LETTER "C"—Continued

[Sample Inspection Criteria]

Stage	Pass No.	Fail No.
45	21	27
46	22	27
47	22	27
48	23	27
49	23	27
50	26	27

[1] Test sample passing not permitted at this stage.
[2] Test sample failure not permitted at this stage.

TABLE 5.—SAMPLING PLAN FOR CODE LETTER "D"

[Sample Inspection Criteria]

Stage	Pass No.	Fail No.
1	([1])	([2])
2	([1])	([2])
3	([1])	([2])
4	([1])	([2])
5	0	([2])
6	0	6
7	1	7
8	2	8
9	2	8
10	3	9
11	3	9
12	4	10
13	4	10
14	5	11
15	5	11
16	6	12
17	6	12
18	7	13
19	7	13
20	8	14
21	8	14
22	9	15
23	9	15
24	10	16
25	11	16
26	11	17
27	12	17
28	12	18
29	13	19
30	13	19
31	14	20
32	14	20
33	15	21
34	15	21
35	16	22
36	16	22
37	17	23
38	17	23
39	18	24
40	18	24
41	19	25
42	19	26
43	20	26
44	21	27
45	21	27
46	22	28
47	22	28
48	23	29
49	23	29
50	24	30
51	24	30
52	25	31

TABLE 5.—SAMPLING PLAN FOR CODE LETTER "D"—Continued

[Sample Inspection Criteria]

Stage	Pass No.	Fail No.
53	25	31
54	26	32
55	26	32
56	27	33
57	27	33
58	28	33
59	28	33
60	32	33

[1] Test sample passing not permitted at this stage.
[2] Test sample failure not permitted at this stage.

Subpart G—Importation of Nonconforming Engines

§90.601 Applicability.

(a) Except where otherwise indicated, this subpart is applicable to engines and vehicles which are offered for importation or imported into the United States and for which the Administrator has promulgated regulations under subpart B of this part prescribing emission standards, but which are not covered by certificates of conformity issued under section 213 and section 206(a) of the Clean Air Act (that is, which are nonconforming engines as defined below) and under subpart B of this part at the time of importation or conditional importation, as applicable. Compliance with regulations under this subpart shall not relieve any person or entity from compliance with other applicable provisions of the Clean Air Act.

(b) Regulations prescribing further procedures for the importation of small SI engines into the Customs territory of the United States, as defined in 19 U.S.C. 1202, are set forth in U.S. Customs Service regulations.

§90.602 Definitions.

The definitions in subpart A of this part apply to this subpart. The following definitions also apply to this subpart.

Certificate of conformity. The document issued by the Administrator under section 213 and section 206(a) of the Act.

Nonconforming engine. An engine which is not covered by a certificate of conformity prior to final or conditional admission (or for which such coverage

has not been adequately demonstrated to EPA).

Original engine manufacturer (OEM). The entity which originally manufactured the engine.

Original production (OP) year. The calendar year in which the engine was originally produced by the OEM.

Original production (OP) years old. The age of an engine as determined by subtracting the original production year of the engine from the calendar year of importation.

Production changes. Those changes in the engine configuration, equipment or calibration which are made by an OEM in the course of engine production and required to be reported under § 90.123.

United States. United States includes the Customs territory of the United States as defined in 19 U.S.C. 1202, and the Virgin Islands, Guam, American Samoa and the Commonwealth of the Northern Mariana Islands.

§ 90.603 [Reserved]

§ 90.604 General requirements.

(a) A nonconforming engine offered for importation into the United States may only be imported for purposes other than resale under § 90.611, or under the provisions of § 90.612, provided that an exemption or exclusion is granted by the Administrator.

(b) Final admission shall not be granted unless:

(1) The engine is imported for purposes other than resale under § 90.611; or

(2) The engine is exempted or excluded under § 90.612.

(c) An engine offered for importation may be admitted into the United States. In order to obtain admission, the importer must submit to the Administrator a written request for approval containing the following:

(1) Identification of the importer and the importer's address, telephone number, and taxpayer identification number;

(2) Identification of the engine owner, the owner's address, telephone number, and taxpayer identification number;

(3) Identification of the engine including make, model, identification number, and original production year;

(4) Information indicating under what provision of these regulations the engine is to be imported;

(5) Identification of the place where the subject engine is to be stored until EPA approval of the importer's application to the Administrator for final admission;

(6) Authorization for EPA enforcement officers to conduct inspections or testing otherwise permitted by the Act or regulations thereunder; and

(7) Such other information as is deemed necessary by the Administrator.

§ 90.605–90.610 [Reserved]

§ 90.611 Importation for purposes other than resale.

(a) Any individual may import on a one-time basis three or fewer nonconforming engines for purposes other than resale. Such importation by individuals is permitted without modification to the engines and without prior written approval of EPA. Importations under this provision shall be made by completing such applications as required by the Administrator. Such applications shall contain:

(1) Identification of the importer of the engine and the importer's address, telephone number, and taxpayer identification number;

(2) Identification of the engine owner, the owner's address, telephone number, and taxpayer identification number;

(3) The number of engines imported under § 90.611 by the individual;

(4) A statement that the individual has not previously imported any engines under § 90.611;

(5) A statement that the individual is not importing the engines for the purpose of resale;

(6) For each engine imported, identification of the engine including make, model, identification number, and original production year;

(7) Information indicating under what provision of these regulations the engine is to be imported;

(8) Authorization for EPA enforcement officers to conduct inspections permitted by the Act or regulations thereunder;

(9) Such other information as is deemed necessary by the Administrator.

(b) EPA will not require a U.S. Customs Service bond for a nonconforming engine which is imported under §90.611.

§90.612 Exemptions and exclusions.

(a) Individuals shall be eligible for importing engines into the United States under the provisions of this section, unless otherwise specified.

(b) Notwithstanding other requirements of this subpart, an engine entitled to one of the temporary exemptions of this paragraph may be conditionally admitted into the United States if prior written approval for the conditional admission is obtained from the Administrator. Conditional admission is to be under U.S. Customs Service bond. The Administrator may request that the U.S. Customs Service require a specific bond amount to ensure compliance with the requirements of the Act and this subpart. A written request for approval from the Administrator is to contain the identification required in §90.604(c) and information that demonstrates that the importer is entitled to the exemption. Noncompliance with provisions of this section may result in the forfeiture of the total amount of the bond or exportation of the engine. The following temporary exemptions are permitted by this paragraph:

(1) *Exemption for repairs or alterations.* Upon written approval by EPA, an owner of engines may conditionally import under bond such engines solely for purpose of repair(s) or alteration(s). The engines may not be operated in the United States other than for the sole purpose of repair or alteration. They may not be sold or leased in the United States and are to be exported upon completion of the repair(s) or alteration(s).

(2) *Testing exemption.* A test engine may be conditionally imported by a person subject to the requirements of §90.905. A test engine may be operated in the United States provided that the operation is an integral part of the test. This exemption is limited to a period not exceeding one year from the date of importation unless a request is made by the appropriate importer concerning the engine in accordance with §90.905(f) for a subsequent one-year period.

(3) *Display exemptions.*

(i) An engine intended solely for display may be conditionally imported subject to the requirements of §90.907.

(ii) A display engine may be imported by any person for purposes related to a business or the public interest. Such purposes do not include collections normally inaccessible or unavailable to the public on a daily basis, display of an engine at a dealership, private use, or other purpose that the Administrator determines is not appropriate for display exemptions. A display engine may not be sold in the United States and may not be operated in the United States except for the operation incident and necessary to the display purpose.

(iii) A temporary display exemption will be granted for 12 months (one year) or for the duration of the display purpose, whichever is shorter. Two extensions of up to 12 months (one year) each are available upon approval by the Administrator. In no circumstances, however, may the total period of exemption exceed 36 months (three years).

(c) Notwithstanding any other requirement of this subpart, an engine may be finally admitted into the United States under this paragraph if prior written approval for such final admission is obtained from the Administrator. Conditional admission of these engines under this subpart is not permitted for the purpose of obtaining such written approval from the Administrator. A request for approval is to contain the identification information required in §90.604(c) and information that demonstrates that the importer is entitled to the exemption or exclusion. The following exemptions or exclusions are permitted by this paragraph:

(1) *National security exemption.* An engine may be imported under the national security exemption found at §90.908.

(2) *Hardship exemption.* The Administrator may exempt on a case-by-case basis an engine from federal emission requirements to accommodate unforeseen cases of extreme hardship or extraordinary circumstances.

(3) *Exemption for engines identical to United States certified versions.*

(i) A person (including businesses) is eligible for importing an engine into the United States under the provisions of this paragraph. An exemption will be granted if the engine:

(A) is owned by the importer;

(B) is not offered for importation for the purpose of resale; and

(C) is proven to be identical, in all material respects, to an engine certified by the original equipment manufacturer (OEM) for sale in the United States or is proven to have been modified to be identical, in all material respects, to an engine certified by the OEM for sale in the United States according to complete written instructions provided by the OEM's United States representative, or his/her designee.

(ii) *Proof of Conformity*. (A) Documentation submitted pursuant to this section for the purpose of proving conformity of individual engines is to contain sufficiently organized data or evidence demonstrating that the engine identified pursuant to § 90.604(c) is identical, in all material respects, to an engine identified in an OEM's application for certification.

(B) If the documentation does not contain all the information required by this part, or is not sufficiently organized, EPA will notify the importer of any areas of inadequacy, and that the documentation will not receive further consideration until the required information or organization is provided.

(C) If EPA determines that the documentation does not clearly or sufficiently demonstrate that an engine is eligible for importation, EPA will notify the importer in writing.

(D) If EPA determines that the documentation clearly and sufficiently demonstrates that an engine is eligible for importation, EPA will grant approval for importation and notify the importer in writing.

(d) Foreign diplomatic and military personnel may import a nonconforming engine without bond. At the time of admission, the importer shall submit to the Administrator the written report required in § 90.604(a) and a statement from the U.S. Department of State confirming qualification for this exemption. Foreign military personnel may, in lieu of a statement from the U.S. Department of State, submit to the Administrator a copy of their orders for duty in the United States. The engine may not be sold in the United States and must be exported if the individual's diplomatic status is no longer applicable, as determined by the Department of State, or the foreign military orders for duty in the United States are no longer applicable, unless subsequently brought into conformity with U.S. emission requirements.

(e) *Competition exclusion*. A nonconforming engine may be conditionally admitted by any person provided the importer demonstrates to the Administrator that the engine is used to propel a nonroad vehicle used solely for competition and obtains prior written approval from the Administrator. A nonconforming engine imported pursuant to this paragraph may not be operated in the United States except for that operation incident and necessary for the competition purpose, unless subsequently brought into conformity with United States emission requirements in accordance with § 90.612(c)(3).

(f) *Exclusions/exemptions based on date of original manufacture.*

(1) Notwithstanding any other requirements of this subpart, engines originally manufactured prior to model year 1997 are excluded from the requirements of the Act in accordance with section 213 of the Act and may be imported by any person.

(2) Notwithstanding other requirements of this subpart, an engine not subject to an exclusion under § 90.612(f)(1) but greater than 20 original production (OP) years old is entitled to an exemption from the requirements of the Act, provided that it has not been modified in those 20 OP years. At the time of admission, the importer shall submit to the Administrator the written report required in § 90.604(c).

(g) An application for exemption and exclusion provided for in paragraphs (b), (c), and (e) of this section is to be mailed to: U.S. Environmental Protection Agency, Office of Mobile Sources, Manufacturers Operations Division (6405–J), 401 M Street, S.W., Washington, D.C. 20460, Attention: Imports.

§90.613 Prohibited acts; penalties.

(a) The importation of an engine which is not covered by a certificate of conformity other than in accordance with this subpart and the entry regulations of the U.S. Customs Service is prohibited. Failure to comply with this subpart is a violation of section 213(d) and section 203 of the Act.

(b) Unless otherwise permitted by this subpart, during a period of conditional admission, the importer of an engine shall not:

(1) Register, license, or operate the engine in the United States; or

(2) Sell or offer the engine for sale.

(c) An engine conditionally admitted pursuant to §90.612(b), (d), or (e) and not granted final admission within the period of time specified for such conditional admission in the written prior approval obtained from EPA, or within such additional time as designated by the Administrator, is deemed to be unlawfully imported into the United States in violation of section 213(d) and section 203 of the Act, unless the engine has been delivered to the U.S. Customs Service for export or other disposition under applicable Customs laws and regulations. An engine not so delivered is subject to seizure by the U.S. Customs Service.

(d) An importer who violates section 213(d) and section 203 of the Act is subject to a civil penalty under section 205 of the Act of not more than $25,000 for each engine subject to the violation. In addition to the penalty provided in the Act, where applicable, under the exemption provisions of §90.612(b), a person or entity who fails to deliver the engine to the U.S. Customs Service is liable for liquidated damages in the amount of the bond required by applicable Customs laws and regulations.

§90.614 Treatment of confidential information.

The provisions for treatment of confidential information described in §90.4 apply to this subpart.

Subpart H [Reserved]

Subpart I—Emission-related Defect Reporting Requirements, Voluntary Emission Recall Program

§90.801 Applicability.

The requirements of subpart I are applicable to all nonroad engines and vehicles subject to the provisions of subpart A of part 90. The requirement to report emission-related defects affecting a given class or category of engines will remain applicable for five years from the end of the calendar year in which such engines were manufactured.

§90.802 Definitions.

The definitions in subpart A of this part apply to this subpart. All terms not defined herein or in subpart A have the meaning given them in the Act.

Emission-related defect means a defect in design, materials, or workmanship in a device, system, or assembly described in the approved application for certification which affects any applicable parameter or specification enumerated in 40 CFR part 85, Appendix VIII.

Voluntary emission recall means a repair, adjustment, or modification program voluntarily initiated and conducted by a manufacturer to remedy any emission-related defect for which notification of engine owners has been provided.

§90.803 Emission defect information report.

(a) A manufacturer must file a defect information report whenever, on the basis of data obtained subsequent to the effective date of these regulations:

(1) The manufacturer determines, in accordance with procedures established by the manufacturer to identify either safety-related or performance defects, that a specific emission-related defect exists; and

(2) A specific emission-related defect exists in 25 or more engines of a given engine family manufactured in the same certificate or model year.

(b) No report must be filed under this section for any emission-related defect corrected prior to the sale of the affected engines to ultimate purchasers.

(c) The manufacturer must submit defect information reports to EPA's Manufacturers Operations Division not more than 15 working days after an emission-related defect is found to affect 25 engines in a given engine family manufactured in the same certificate or model year. Information required by paragraph (d) of this section that is either not available within 15 working days or is significantly revised must be submitted to EPA's Manufacturers Operations Division as it becomes available.

(d) Each defect report must contain the following information in substantially the format outlined below:

(1) The manufacturer's corporate name.

(2) A description of the defect.

(3) A description of each class or category of engines potentially affected by the defect including make, model, model year, calendar year produced, and any other information required to identify the engines affected.

(4) For each class or category of engine described in response to paragraph (d)(3) of this section, the following must also be provided:

(i) The number of engines known or estimated to have the defect and an explanation of the means by which this number was determined.

(ii) The address of the plant(s) at which the potentially defective engines were produced.

(5) An evaluation of the emissions impact of the defect and a description of any operational problems which a defective engine might exhibit.

(6) Available emission data which relate to the defect.

(7) An indication of any anticipated manufacturer follow-up.

§ 90.804 Voluntary emissions recall.

(a) When any manufacturer initiates a voluntary emissions recall campaign involving 25 or more engines, the manufacturer must submit a report describing the manufacturer's voluntary emissions recall plan as prescribed by this section within 15 working days of the date owner notification was begun. The report must contain the following:

(1) A description of each class or category of engines recalled including the number of engines to be recalled, the model year, the make, the model, and such other information as may be required to identify the engines recalled;

(2) A description of the specific modifications, alterations, repairs, corrections, adjustments, or other changes to be made to correct the engines affected by the emission-related defect;

(3) A description of the method by which the manufacturer will notify engine owners and, if applicable, the method by which the manufacturer will determine the names and addresses of engine owners;

(4) A description of the proper maintenance or use, if any, upon which the manufacturer conditions eligibility for repair under the recall plan, an explanation of the manufacturer's reasons for imposing any such conditions, and a description of the proof to be required of an engine owner to demonstrate compliance with any such conditions;

(5) A description of the procedure to be followed by engine owners to obtain correction of the nonconformity. This may include designation of the date on or after which the owner can have the nonconformity remedied, the time reasonably necessary to perform the labor to remedy the defect, and the designation of facilities at which the defect can be remedied;

(6) A description of the class of persons other than dealers and authorized warranty agents of the manufacturer who will remedy the defect;

(7) When applicable, three copies of any letters of notification to be sent engine owners;

(8) A description of the system by which the manufacturer will assure that an adequate supply of parts is available to perform the repair under the plan, and that the supply remains both adequate and responsive to owner demand;

(9) Three copies of all necessary instructions to be sent to those persons who are to perform the repair under the recall plan;

(10) A description of the impact of the proposed changes on fuel consumption, performance, and safety of each class or category of engines to be recalled;

(11) A sample of any label to be applied to engines which participated in the voluntary recall campaign.

(b) The manufacturer must submit at least one report on the progress of the recall campaign. Such report must be submitted no later than 18 months from the date notification was begun and include the following information:

(1) The methods used to notify both engine owners, dealers and other individuals involved in the recall campaign;

(2) The number of engines known or estimated to be affected by the emission-related defect and an explanation of the means by which this number was determined;

(3) The number of engines actually receiving repair under the plan; and

(4) The number of engines determined to be ineligible for remedial action due to a failure to properly maintain or use such engines.

§90.805 Reports, voluntary recall plan filing, record retention.

(a) Send the defect report, voluntary recall plan, and the voluntary recall progress report to: Director, Manufacturers Operations Division, Environmental Protection Agency, 401 M St. S.W., Washington, D.C. 20460.

(b) Retain the information gathered by the manufacturer to compile the reports for not less than five years from the date of the manufacture of the engines. The manufacturer must make this information available to duly authorized officials of the EPA upon request.

§90.806 Responsibility under other legal provisions preserved.

The filing of any report under the provisions of this subpart does not affect a manufacturer's responsibility to file reports or applications, obtain approval, or give notice under any provision of law.

§90.807 Disclaimer of production warranty applicability.

(a) The act of filing an Emission Defect Information Report is inconclusive as to the existence of a defect subject to the warranty provided by subpart L of this part.

(b) A manufacturer may include on each page of its Emission Defect Information Report a disclaimer stating that the filing of a Defect Information Report pursuant to these regulations is not conclusive as to the applicability of the warranty provided by subpart L of this part.

Subpart J—Exclusion and Exemption of Nonroad Engines from Regulations

§90.901 Applicability.

The requirements of subpart J are applicable to all nonroad engines and vehicles subject to the provisions of subpart A of part 90.

§90.902 Definitions.

The definitions in subpart A of this part apply to this subpart. The following definitions also apply to this subpart:

Exemption means exemption from the prohibitions of §90.1003.

Export exemption means an exemption granted under §90.1004(b) for the purpose of exporting new nonroad engines.

National security exemption means an exemption granted under §90.1004(b) for the purpose of national security.

Manufacturer-owned nonroad engine means an uncertified nonroad engine owned and controlled by a nonroad engine manufacturer and used in a manner not involving lease or sale by itself or in a vehicle employed from year to year in the ordinary course of business for product development, production method assessment, and market promotion purposes.

Testing exemption means an exemption granted under §90.1004(b) for the purpose of research, investigations, studies, demonstrations or training, but not including national security.

§ 90.903 Exclusions, application of section 216 (10) and (11) of the Act.

(a) For the purpose of determining the applicability of section 216(10) of the Act, an internal combustion engine (including the fuel system) that is not used in a motor vehicle is deemed a nonroad engine, if it meets the definition in subpart A of this part. For the purpose of determining the applicability of section 216(11) of the Act, a vehicle powered by a nonroad engine is deemed a nonroad vehicle, if it meets the definition in subpart A of this part.

(b) EPA will maintain a list of models of nonroad engines and models of nonroad vehicles that have been determined to be excluded because they are used solely for competition. This list will be available to the public and may be obtained by writing to the following address: Group Manager, Engine Compliance Programs Group, Engine Programs and Compliance Division (6403J) Environmental Protection Agency, 401 M Street SW., Washington, DC 20460.

(c) Upon written request with supporting documentation, EPA will make written determinations as to whether certain engines are or are not nonroad engines. Engines that are determined not to be nonroad engines are excluded from regulations under this part.

[61 FR 52102, Oct. 4, 1996]

§ 90.904 Who may request an exemption.

(a) Any person may request a testing exemption under § 90.905.

(b) Any nonroad engine manufacturer may request a national security exemption under § 90.908.

(c) For nonroad engine manufacturers, nonroad engines manufactured for export purposes are exempt without application, subject to the provisions of § 90.909.

(d) For eligible manufacturers, as determined by § 90.906, manufacturer-owned nonroad engines are exempt without application, subject to the provisions of § 90.906.

(e) For any person, display nonroad engines are exempt without application, subject to the provisions of § 90.907.

§ 90.905 Testing exemption.

(a) Any person requesting a testing exemption must demonstrate the following:

(1) That the proposed test program has a purpose which constitutes an appropriate basis for an exemption in accordance with § 90.1004(b), and in accordance with subsection (b) of this section;

(2) That the proposed test program necessitates the granting of an exemption, in accordance with subsection (c) of this section;

(3) That the proposed test program exhibits reasonableness in scope, in accordance with subsection (d) of this section; and

(4) That the proposed test program exhibits a degree of control consonant with the purpose of the program and EPA's monitoring requirements, in accordance with subsection (e) of this section.

(b) With respect to the purpose of the proposed test program, an appropriate purpose would be research, investigations, studies, demonstrations, or training, but not national security. A concise statement of purpose is a required item of information.

(c) With respect to the necessity that an exemption be granted, necessity arises from an inability to achieve the stated purpose in a practicable manner without performing or causing to be performed one or more of the prohibited acts under § 90.1003. In appropriate circumstances, time constraints may be a sufficient basis for necessity, but the cost of certification alone, in the absence of extraordinary circumstances, is not a basis for necessity.

(d) With respect to reasonableness, a test program must exhibit a duration of reasonable length and affect a reasonable number of engines. In this regard, required items of information include:

(1) An estimate of the program's duration; and

(2) The maximum number of nonroad engines involved.

(e) With respect to control, the test program must incorporate procedures consistent with the purpose of the test

and be capable of affording EPA monitoring capability. As a minimum, required items of information include:

(1) The technical nature of the test;

(2) The site of the test;

(3) The duration and accumulated engine operation associated with the test;

(4) The ownership arrangement with regard to the engines involved in the test;

(5) The intended final disposition of the engines;

(6) The manner in which the engines used in the test will be identified, and that identification recorded, and made available; and

(7) The means or procedure whereby test results will be recorded.

(f) A manufacturer of new nonroad engines may request a testing exemption to cover nonroad engines intended for use in test programs planned or anticipated over the course of a subsequent one-year period. Unless otherwise required by the Director, Manufacturers Operations Division, a manufacturer requesting such an exemption need only furnish the information required by paragraphs (a)(1) and (d)(2) of this section along with a description of the recordkeeping and control procedures that will be employed to assure that the engines are used for purposes consistent with §90.1004(b).

§90.906 Manufacturer-owned exemption and precertification exemption.

(a) Except as provided in paragraph (b) of this section, any manufacturer-owned nonroad engine, as defined by §90.902, is exempt from §90.1003, without application, if the manufacturer complies with the following terms and conditions:

(1) The manufacturer must establish, maintain, and retain the following adequately organized and indexed information on each exempted engine:

(i) Engine identification number;

(ii) Use of the engine on exempt status; and

(iii) Final disposition of any engine removed from exempt status.

(2) The manufacturer must provide right of entry and access to these records to EPA authorized representatives as required by §90.506.

(3) Unless the requirement is waived or an alternative procedure is approved by the Director, Manufacturers Operations Division, the manufacturer must permanently affix a label to each nonroad engine on exempt status. This label should:

(i) Be affixed in a readily visible portion of the engine;

(ii) Be attached in such a manner that it cannot be removed without destruction or defacement;

(iii) State in the English language and in block letters and numerals of a color that contrasts with the background of the label, the following information:

(A) The label heading ''Emission Control Information;''

(B) Full corporate name and trademark of manufacturer;

(C) Engine displacement, engine family identification, and model year of engine; or person or office to be contacted for further information about the engine;

(D) The statement ''This nonroad engine is exempt from the prohibitions of 40 CFR 90.1003.''

(4) No provision of paragraph (a)(3) of this section prevents a manufacturer from including any other information it desires on the label.

§90.907 Display exemption.

Where an uncertified nonroad engine is a display engine to be used solely for display purposes, will only be operated incident and necessary to the display purpose, and will not be sold unless an applicable certificate of conformity has been received or the engine has been finally admitted pursuant to subpart G of this part, no request for exemption of the engine is necessary.

§90.908 National security exemption.

(a)(1) Any nonroad engine, otherwise subject to this part, which is used in a vehicle or equipment that exhibits substantial features ordinarily associated with military combat such as armor and/or permanently affixed weaponry and which will be owned and/or used by an agency of the federal government with responsibility for national defense, will be considered exempt from

this part for purposes of national security. No request for exemption is necessary.

(2) Manufacturers may request a national security exemption for any nonroad engine, otherwise subject to this part, which does not meet the conditions described in paragraph (a)(1) of this section. A manufacturer requesting a national security exemption must state the purpose for which the exemption is required and the request must be endorsed by an agency of the federal government charged with responsibility for national defense.

(b) EPA will maintain a list of models of nonroad engines (and the vehicles or equipment which use them) that have been granted a national security exemption under paragraph (a)(2) of this section. This list will be available to the public and may be obtained by writing to the following address: Group Manager, Engine Compliance Programs Group, Engine Programs and Compliance Division (6403J) Environmental Protection Agency, 401 M Street SW., Washington, DC 20460.

[61 FR 52102, Oct. 4, 1996]

§ 90.909 Export exemptions.

(a) A new nonroad engine intended solely for export, and so labeled or tagged on the outside of the container and on the engine itself, is subject to the provisions of § 90.1003, unless the importing country has new nonroad engine emission standards which differ from EPA standards.

(b) For the purpose of paragraph (a) of this section, a country having no standards, whatsoever, is deemed to be a country having emission standards which differ from EPA standards.

(c) EPA will maintain a list of foreign countries that have in force nonroad emission standards identical to U.S. EPA standards and have so notified EPA. This list may be obtained by writing to the following address: Chief, Manufacturers Programs Branch, Manufacturers Operations Division (6405–J), Environmental Protection Agency, 401 M Street, S.W., Washington, D.C. 20460. New nonroad engines exported to such countries must comply with U.S. EPA certification regulations.

(d) It is a condition of any exemption for the purpose of export under § 90.1004(b) that such exemption be void ab initio with respect to a new nonroad engine intended solely for export if such nonroad engine is sold, or offered for sale, to an ultimate purchaser in the United States for purposes other than export.

§ 90.910 Granting of exemptions.

(a) If upon completion of the review of an exemption request made pursuant to § 90.905 or § 90.908, EPA determines it is appropriate to grant such an exemption, a memorandum of exemption is to be prepared and submitted to the person requesting the exemption. The memorandum is to set forth the basis for the exemption, its scope, and such terms and conditions as are deemed necessary. Such terms and conditions generally include, but are not limited to, agreements by the applicant to conduct the exempt activity in the manner described to EPA, create and maintain adequate records accessible to EPA at reasonable times, employ labels for the exempt engines setting forth the nature of the exemption, take appropriate measures to assure that the terms of the exemption are met, and advise EPA of the termination of the activity and the ultimate disposition of the engines.

(b) Any exemption granted pursuant to paragraph (a) of this section is deemed to cover any subject engine only to the extent that the specified terms and conditions are complied with. A breach of any term or condition causes the exemption to be void ab initio with respect to any engine. Consequently, the causing or the performing of an act prohibited under § 90.1003(a) (1) or (3), other than in strict conformity with all terms and conditions of this exemption, renders the person to whom the exemption is granted, and any other person to whom the provisions of § 90.1003 are applicable, liable to suit under sections 204 and 205 of the Act.

§ 90.911 Submission of exemption requests.

Requests for exemption or further information concerning exemptions and/

or the exemption request review procedure should be addressed to: Chief, Manufacturers Programs Branch, Manufacturers Operations Division (6405–J), Environmental Protection Agency, 401 M Street, SW., Washington, DC 20460.

§90.912 Treatment of confidential information.

The provisions for treatment of confidential information described in §90.4 apply to this subpart.

Subpart K—Prohibited Acts and General Enforcement Provisions

§90.1001 Applicability.

The requirements of subpart K are applicable to all nonroad engines and vehicles subject to the provisions of subpart A of part 90.

§90.1002 Definitions.

The definitions in subpart A of this part apply to this subpart. All terms not defined herein or in subpart A have the meaning given them in the Act.

§90.1003 Prohibited acts.

(a) The following acts and the causing thereof are prohibited:

(1)(i) In the case of a manufacturer of new nonroad engines or vehicles for distribution in commerce, the sale, the offering for sale, or the introduction, or delivery for introduction, into commerce, of any new nonroad engine manufactured after the applicable effective date under this part unless such engine is covered by a certificate of conformity issued (and in effect) under regulations found in this part.

(ii) In the case of any person, except as provided by regulation of the Administrator, the importation into the United States of any new nonroad engine manufactured after the applicable effective date under this part unless such engine is covered by a certificate of conformity issued (and in effect) under regulations found in this part.

(2)(i) For a person to fail or refuse to permit access to or copying of records or to fail to make reports or provide information required under §90.1004.

(ii) For a person to fail or refuse to permit entry, testing or inspection authorized under §§90.126, 90.506 or 90.1004.

(iii) For a person to fail or refuse to perform tests, or to have tests performed as required under §§90.119, 90.504 or 90.1004.

(iv) For a person to fail to establish or maintain records as required under §90.1004.

(3)(i) For a person to remove or render inoperative a device or element of design installed on or in a nonroad engine in compliance with regulations under this part prior to its sale and delivery to the ultimate purchaser, or for a person knowingly to remove or render inoperative such a device or element of design after the sale and delivery to the ultimate purchaser; or

(ii) For a person to manufacture, sell or offer to sell, or install, a part or component intended for use with, or as part of, a nonroad engine, where a principal effect of the part or component is to bypass, defeat, or render inoperative a device or element of design installed on or in a nonroad engine in compliance with regulations issued under this part, and where the person knows or should know that the part or component is being offered for sale or installed for this use or put to such use.

(4) For a manufacturer of a new nonroad engine subject to standards prescribed under this part:

(i) To sell, offer for sale, or introduce or deliver into commerce, a nonroad engine unless the manufacturer has complied with the requirements of §90.1102.

(ii) To sell, offer for sale, or introduce or deliver into commerce, a nonroad engine unless a label or tag is affixed to the engine in accordance with regulations under this part.

(iii) To provide directly or indirectly in any communication to the ultimate purchaser or a subsequent purchaser that the coverage of a warranty under the Act is conditioned upon use of a part, component, or system manufactured by the manufacturer or a person acting for the manufacturer or under its control, or conditioned upon service performed by such persons, except as provided in subpart L of this part.

(iv) To fail or refuse to comply with the terms and conditions of the warranty under subpart L of this part.

(5) For a manufacturer of new nonroad vehicles to distribute in commerce, sell, offer for sale, or introduce into commerce, nonroad vehicles which contain an engine not covered by a certificate of conformity (except as specified in paragraph (b)(4) of this section) or which contain a handheld engine in a nonhandheld vehicle.

(6) For a person to circumvent or attempt to circumvent the residence time requirements of Paragraph (a)(2)(iii) of this Section of the nonroad engine definition in § 90.3.

(b) For the purposes of enforcement of this part, the following apply:

(1) Nothing in paragraph (a) of this section is to be construed to require the use of manufacturer parts in maintaining or repairing a nonroad engine.

(2) Actions for the purpose of repair or replacement of a device or element of design or any other item are not considered prohibited acts under § 90.1003(a) if the actions are a necessary and temporary procedure, the device or element is replaced upon completion of the procedure, and the action results in the proper functioning of the device or element of design.

(3) Actions for the purpose of a conversion of a nonroad engine for use of a clean alternative fuel (as defined in Title II of the Act) are not considered prohibited acts under § 90.1003(a) if:

(i) The vehicle complies with the applicable standard when operating on the alternative fuel, and the device or element is replaced upon completion of the conversion procedure, and

(ii) In the case of engines converted to dual fuel or flexible use, the action results in proper functioning of the device or element when the nonroad engine operates on conventional fuel.

(4) Certified nonroad engines shall be used in all vehicles that are self-propelled, portable, transportable, or are intended to be propelled while performing their function unless the manufacturer of the vehicle can prove that the vehicle will be used in a manner consistent with paragraph (2) of the definition of nonroad engine in § 90.3 of this part. Nonroad vehicle manufacturers may continue to use noncertified nonroad engines built prior to the effective date until noncertified engine inventories are depleted; however, stockpiling (i.e., build up of an inventory of engines outside of normal business practices) of noncertified nonroad engines will be considered a violation of this section.

§ 90.1004 General enforcement provisions.

(a) *Information collection provisions.* (1) Every manufacturer of new nonroad engines and other persons subject to the requirements of this part must establish and maintain records, perform tests where such testing is not otherwise reasonably available under this part, make reports and provide information the Administrator may reasonably require to determine whether the manufacturer or other person has acted or is acting in compliance with this part or to otherwise carry out the provisions of this part, and must, upon request of an officer or employee duly designated by the Administrator, permit the officer or employee at reasonable times to have access to and copy such records. The manufacturer shall comply in all respects with the requirements of subpart I of this part.

(2) For purposes of enforcement of this part, an officer or employee duly designated by the Administrator, upon presenting appropriate credentials, is authorized:

(i) To enter, at reasonable times, any establishment of the manufacturer, or of any person whom the manufacturer engaged to perform any activity required under paragraph (a)(1) of this section, for the purposes of inspecting or observing any activity conducted pursuant to paragraph (a)(1) of this section; and

(ii) To inspect records, files, papers, processes, controls, and facilities used in performing an activity required by paragraph (a)(1) of this section, by the manufacturer or by a person whom the manufacturer engaged to perform the activity.

(b) *Exemption provision.* The Administrator may exempt a new nonroad engine from § 90.1003 upon such terms and conditions as the Administrator may find necessary for the purpose of export, research, investigations, studies, demonstrations, or training, or for reasons of national security.

(c) *Importation provision.* (1) A new nonroad engine or vehicle offered for importation or imported by a person in violation of §90.1003 is to be refused admission into the United States, but the Secretary of the Treasury and the Administrator may, by joint regulation, provide for deferring a final determination as to admission and authorizing the delivery of such a nonroad engine offered for import to the owner or consignee thereof upon such terms and conditions (including the furnishing of a bond) as may appear to them appropriate to insure that the nonroad engine will be brought into conformity with the standards, requirements, and limitations applicable to it under this part.

(2) If a nonroad engine is finally refused admission under this paragraph, the Secretary of the Treasury shall cause disposition thereof in accordance with the customs laws unless it is exported, under regulations prescribed by the Secretary, within 90 days of the date of notice of the refusal or additional time as may be permitted pursuant to the regulations.

(3) Disposition in accordance with the customs laws may not be made in such manner as may result, directly or indirectly, in the sale, to the ultimate purchaser, of a new nonroad engine that fails to comply with applicable standards of the Administrator under this part.

(d) *Export provision.* A new nonroad engine intended solely for export, and so labeled or tagged on the outside of the container and on the engine itself, shall be subject to the provisions of §90.1003, except that if the country that is to receive the engine has emission standards that differ from the standards prescribed under subpart B of this part, then the engine must comply with the standards of the country that is to receive the engine.

§90.1005 Injunction proceedings for prohibited acts.

(a) The district courts of the United States have jurisdiction to restrain violations of §90.1003.

(b) Actions to restrain such violations must be brought by and in the name of the United States. In an action, subpoenas for witnesses who are required to attend a district court in any district may run into any other district.

§90.1006 Penalties.

(a) *Violations.* A violation of the requirements of this subpart is a violation of the applicable provisions of the Act and is subject to the penalty provisions thereunder.

(1) A person who violates §90.1003(a)(1), (a)(4), or (a)(5), or a manufacturer or dealer who violates §90.1003(a)(3)(i), is subject to a civil penalty of not more than $25,000 for each violation.

(2) A person other than a manufacturer or dealer who violates §90.1003(a)(3)(i) or any person who violates §90.1003(a)(3)(ii) is subject to a civil penalty of not more than $2,500 for each violation.

(3) A violation with respect to §90.1003(a)(1), (a)(3)(i), (a)(4), or (a)(5) constitutes a separate offense with respect to each nonroad engine.

(4) A violation with respect to §90.1003(a)(3)(ii) constitutes a separate offense with respect to each part or component. Each day of a violation with respect to §90.1003(a)(6) constitutes a separate offense.

(5) A person who violates §90.1003(a)(2) or (a)(6) is subject to a civil penalty of not more than $25,000 per day of violation.

(b) *Civil actions.* The Administrator may commence a civil action to assess and recover any civil penalty under paragraph (a) of this section.

(1) An action under this paragraph may be brought in the district court of the United States for the district in which the violation is alleged to have occurred, the defendant resides, or the Administrator's principal place of business is located, and in which the court has jurisdiction to assess a civil penalty.

(2) In determining the amount of a civil penalty to be assessed under this paragraph, the court is to take into account the gravity of the violation, the economic benefit or savings (if any) resulting from the violation, the size of the violator's business, the violator's history of compliance with Title II of the Act, action taken to remedy the violation, the effect of the penalty on

the violator's ability to continue in business, and such other matters as justice may require.

(3) In any such action, subpoenas for witnesses who are required to attend a district court in any district may run into any other district.

(c) *Administrative assessment of certain penalties.* (1) *Administrative penalty authority.* In lieu of commencing a civil action under paragraph (b) of this section, the Administrator shall assess any civil penalty prescribed in paragraph (a) of this section, except that the maximum amount of penalty sought against each violator in a penalty assessment proceeding can not exceed $200,000, unless the Administrator and the Attorney General jointly determine that a matter involving a larger penalty amount is appropriate for administrative penalty assessment. Any such determination by the Administrator and the Attorney General is not subject to judicial review. Assessment of a civil penalty is made by an order made on the record after opportunity for a hearing held in accordance with the procedures found at part 22 of this chapter. The Administrator may compromise, or remit, with or without conditions, any administrative penalty which may be imposed under this section.

(2) *Determining amount.* In determining the amount of any civil penalty assessed under this subsection, the Administrator is to take into account the gravity of the violation, the economic benefit or savings (if any) resulting from the violation, the size of the violator's business, the violator's history of compliance with Title II of the Act, action taken to remedy the violation, the effect of the penalty on the violator's ability to continue in business, and such other matters as justice may require.

(3) *Effect of administrator's action.* (i) Action by the Administrator under this paragraph does not affect or limit the Administrator's authority to enforce any provisions of this part; except that any violation with respect to which the Administrator has commenced and is diligently prosecuting an action under this part, or for which the Administrator has issued a final order not subject to further judicial review and for which the violator has paid a penalty assessment under this part may not be the subject of a civil penalty action under paragraph (b) of this section.

(ii) No action by the Administrator under this part affects a person's obligation to comply with a section of this part.

(4) *Finality of order.* An order issued under this part becomes final 30 days after its issuance unless a petition for judicial review is filed under paragraph (c)(5) of this section.

(5) *Judicial review.* (i) A person against whom a civil penalty is assessed in accordance with this part may seek review of the assessment in the United States District Court for the District of Columbia or for the district in which the violation is alleged to have occurred, in which such person resides, or where the person's principle place of business is located, within the 30-day period beginning on the date a civil penalty order is issued. The person must simultaneously send a copy of the filing by certified mail to the Administrator and the Attorney General.

(ii) The Administrator must file in the court within 30 days a certified copy, or certified index, as appropriate, of the record on which the order was issued. The court is not to set aside or remand any order issued in accordance with the requirements of this paragraph unless substantial evidence does not exist in the record, taken as a whole, to support the finding of a violation or unless the Administrator's assessment of the penalty constitutes an abuse of discretion, and the court is not to impose additional civil penalties unless the Administrator's assessment of the penalty constitutes an abuse of discretion. In any proceedings, the United States may seek to recover civil penalties assessed under this section.

(6) *Collection.* (i) If any person fails to pay an assessment of a civil penalty imposed by the Administrator as provided in this part after the order making the assessment has become final or after a court in an action brought under paragraph (c)(5) of this section has entered a final judgment in favor of the Administrator, the Administrator is to request that the Attorney General bring a civil action in an appropriate

district court to recover the amount assessed (plus interest at rates established pursuant to section 6621(a)(2) of the Internal Revenue Code of 1986 from the date of the final order or the date of final judgment, as the case may be). In such an action, the validity, amount, and appropriateness of the penalty are not subject to review.

(ii) A person who fails to pay on a timely basis the amount of an assessment of a civil penalty as described in paragraph (c)(6)(i) of this section is required to pay, in addition to that amount and interest, the United States' enforcement expenses, including attorney's fees and costs for collection proceedings, and a quarterly nonpayment penalty for each quarter during which the failure to pay persists. The nonpayment penalty is an amount equal to 10 percent of the aggregate amount of that person's penalties and nonpayment penalties which are unpaid as of the beginning of such quarter.

Subpart L—Emission Warranty and Maintenance Instructions

§90.1101 Applicability.

The requirements of subpart L are applicable to all nonroad engines and vehicles subject to the provisions of subpart A of part 90.

§90.1102 Definitions.

The definitions of subpart A of this part apply to this subpart.

§90.1103 Emission warranty, warranty period.

(a) Warranties imposed by this subpart shall be for the first two years of engine use from the date of sale to the ultimate purchaser.

(b) The manufacturer of each new nonroad engine must warrant to the ultimate purchaser and each subsequent purchaser that the engine is designed, built, and equipped so as to conform at the time of sale with applicable regulations under section 213 of the Act, and the engine is free from defects in materials and workmanship which cause such engine to fail to conform with applicable regulations for its warranty period.

(c) In the case of a nonroad engine part, the manufacturer or rebuilder of the part may certify according to §85.2112 of this chapter that use of the part will not result in a failure of the engine to comply with emission standards promulgated in this part.

(d) For the purposes of this section, the owner of any nonroad engine warranted under this part is responsible for the proper maintenance of the engine as stated in the manufacturer's written instructions. Proper maintenance generally includes replacement and service, at the owner's expense at a service establishment or facility of the owner's choosing, such items as spark plugs, points, condensers, and any other part, item, or device related to emission control (but not designed for emission control) under the terms of the last sentence of section 207(a)(3) of the Act, unless such part, item, or device is covered by any warranty not mandated by this Act.

§90.1104 Furnishing of maintenance instructions to ultimate purchaser.

(a) The manufacturer must furnish or cause to be furnished to the ultimate purchaser of each new nonroad engine written instructions for the maintenance needed to assure proper functioning of the emission control system.

(b) The manufacturer must provide in boldface type on the first page of the written maintenance instructions notice that maintenance, replacement, or repair of the emission control devices and systems may be performed by any nonroad engine repair establishment or individual.

(c) The instructions under paragraph (b) of this section will not include any condition on the ultimate purchaser's using, in connection with such engine, any component or service (other than a component or service provided without charge under the terms of the purchase agreement) which is identified by brand, trade, or corporate name. Such instructions also will not directly or indirectly distinguish between service performed by the franchised dealers of such manufacturer or any other service establishments with which such manufacturer has a commercial relationship and service performed by independent nonroad engine repair facilities with

which such manufacturer has no commercial relationship.

(d) The prohibition of paragraph (c) of this section may be waived by the Administrator if:

(1) The manufacturer satisfies the Administrator that the engine will function properly only if the component or service so identified is used in connection with such engine; and

(2) The Administrator finds that such a waiver is in the public interest.

PART 91—CONTROL OF EMISSIONS FROM MARINE SPARK-IGNITION ENGINES

Subpart A—General

Sec.
91.1 Applicability.
91.2 Applicable date.
91.3 Definitions.
91.4 Acronyms and abbreviations.
91.5 Table and figure numbering; position.
91.6 Reference materials.
91.7 Treatment of confidential information.

SUBPART B—EMISSION STANDARDS AND CERTIFICATION PROVISIONS

91.101 Applicability.
91.102 Definitions.
91.103 Averaging, banking, and trading of exhaust emission credits.
91.104 Exhaust emission standards for outboard and personal watercraft engines.
91.105 Useful life period, recall, and warranty periods.
91.106 Certificate of conformity.
91.107 Application for certification.
91.108 Certification.
91.109 Requirement of certification—closed crankcase.
91.110 Requirement of certification—prohibited controls.
91.111 Requirement of certification—prohibition of defeat devices.
91.112 Requirement of certification—adjustable parameters.
91.113 Requirement of certification—emission control information label and engine identification number.
91.114 Requirement of certification—supplying production engines upon request.
91.115 Certification procedure—determining engine power and engine families.
91.116 Certification procedure—test engine selection.
91.117 Certification procedure—service accumulation.
91.118 Certification procedure—testing.
91.119 Certification procedure—use of special test procedures.
91.120 Compliance with Family Emission Limits over useful life.
91.121 Certification procedure—record-keeping.
91.122 Amending the application and certificate of conformity.
91.123 Denial, revocation of certificate of conformity.
91.124 Request for hearing.
91.125 Hearing procedures.
91.126 Right of entry and access.

Subpart C—Averaging, Banking, and Trading Provisions

91.201 Applicability.
91.202 Definitions.
91.203 General provisions.
91.204 Averaging.
91.205 Banking.
91.206 Trading.
91.207 Credit calculation and manufacturer compliance with emission standards.
91.208 Certification.
91.209 Maintenance of records.
91.210 End-of-year and final reports.
91.211 Notice of opportunity for hearing.

Subpart D—Emission Test Equipment Provisions

91.301 Scope; applicability.
91.302 Definitions.
91.303 Acronyms and abbreviations.
91.304 Test equipment overview.
91.305 Dynamometer specifications and calibration accuracy.
91.306 Dynamometer torque cell calibration.
91.307 Engine cooling system.
91.308 Lubricating oil and test fuel.
91.309 Engine intake air temperature measurement.
91.310 Engine intake air humidity measurement.
91.311 Test conditions.
91.312 Analytical gases.
91.313 Analyzers required.
91.314 Analyzer accuracy and specifications.
91.315 Analyzer initial calibration.
91.316 Hydrocarbon analyzer calibration.
91.317 Carbon monoxide analyzer calibration.
91.318 Oxides of nitrogen analyzer calibration.
91.319 NO_X converter check.
91.320 Carbon dioxide analyzer calibration.
91.321 NDIR analyzer calibration.
91.322 Calibration of other equipment.
91.323 Analyzer bench checks.
91.324 Analyzer leakage check.
91.325 Analyzer interference checks.
91.326 Pre- and post-test analyzer calibration.
91.327 Sampling system requirements.

91.328 Measurement equipment accuracy/calibration frequency table.
91.329 Catalyst thermal stress test.
APPENDIX A TO SUBPART D OF PART 91—FIGURES
APPENDIX B TO SUBPART D OF PART 91—FIGURES

Subpart E—Gaseous Exhaust Test Procedures

91.401 Scope; applicability.
91.402 Definitions.
91.403 Symbols and abbreviations.
91.404 Test procedure overview.
91.405 Recorded information.
91.406 Engine parameters to be measured and recorded.
91.407 Engine inlet and exhaust systems.
91.408 Pre-test procedures.
91.409 Engine dynamometer test run.
91.410 Engine test cycle.
91.411 Post-test analyzer procedures.
91.412 Data logging.
91.413 Exhaust sample procedure—gaseous components.
91.414 Raw gaseous exhaust sampling and analytical system description.
91.415 Raw gaseous sampling procedures.
91.416 Intake air flow measurement specifications.
91.417 Fuel flow measurement specifications.
91.418 Data evaluation for gaseous emissions.
91.419 Raw emission sampling calculations.
91.420 CVS concept of exhaust gas sampling system.
91.421 Dilute gaseous exhaust sampling and analytical system description.
91.423 Exhaust gas analytical system; CVS grab sample.
91.424 Dilute sampling procedure—CVS calibration.
91.425 CVS calibration frequency.
91.426 Dilute emission sampling calculations.
91.427 Catalyst thermal stress resistance evaluation.
APPENDIX A TO SUBPART E OF PART 91—TABLES
APPENDIX B TO SUBPART E OF PART 91—FIGURES

Subpart F—Manufacturer Production Line Testing Program

91.501 Applicability.
91.502 Definitions.
91.503 Production line testing by the manufacturer.
91.504 Maintenance of records; submittal of information.
91.505 Right of entry and access.
91.506 Engine sample selection.
91.507 Test procedures.
91.508 Cumulative Sum (CumSum) procedure.
91.509 Calculation and reporting of test results.
91.510 Compliance with criteria for production line testing.
91.511 Suspension and revocation of certificates of conformity.
91.512 Request for public hearing.
91.513 Administrative procedures for public hearing.
91.514 Hearing procedures.
91.515 Appeal of hearing decision.
91.516 Treatment of confidential information.

Subpart G—Selective Enforcement Auditing Regulations

91.601 Applicability.
91.602 Definitions.
91.603 Applicability of part 91, subpart F.
91.604 Test orders.
91.605 Testing by the Administrator.
91.606 Sample selection.
91.607 Test procedures.
91.608 Compliance with acceptable quality level and passing and failing criteria for selective enforcement audits.
APPENDIX A TO SUBPART G OF PART 91—SAMPLING PLANS FOR SELECTIVE ENFORCEMENT AUDITING OF MARINE ENGINES

Subpart H—Importation of Nonconforming Marine Engines

91.701 Applicability.
91.702 Definitions.
91.703 Admission.
91.704 Exemptions and exclusions.
91.705 Prohibited acts; penalties.
91.706 Treatment of confidential information.

Subpart I—In-Use Testing and Recall Regulations

91.801 Applicability.
91.802 Definitions.
91.803 Manufacturer in-use testing program.
91.804 Maintenance, procurement and testing of in-use engines.
91.805 In-use test program reporting requirements.
91.806 Voluntary emissions recall.

Subpart J—Emission-Related Defect Reporting Requirements, Voluntary Emission Recall Program

91.901 Applicability.
91.902 Definitions.
91.903 Applicability to part 85, subpart T.
91.904 Voluntary emission recall.
91.905 Reports, voluntary recall plan filing, record retention.
91.906 Responsibility under other legal provisions preserved.

91.907 Disclaimer of production warranty applicability.

Subpart K—Exclusion and Exemption of Marine SI Engines

91.1001 Applicability.
91.1002 Definitions.
91.1003 Exclusions based on section 216(10) of the Act.
91.1004 Who may request an exemption.
91.1005 Testing exemption.
91.1006 Manufacturer-owned exemption and precertification exemption.
91.1007 Display exemption.
91.1008 National security exemption.
91.1009 Export exemptions.
91.1010 Granting of exemptions.
91.1011 Submission of exemption requests.
91.1012 Treatment of confidential information.

Subpart L—Prohibited Acts and General Enforcement Provisions

91.1101 Applicability.
91.1102 Definitions.
91.1103 Prohibited acts.
91.1104 General enforcement provisions.
91.1105 Injunction proceedings for prohibited acts.
91.1106 Penalties.
91.1107 Warranty provisions.
91.1108 In-use compliance provisions.

Subpart M—Emission Warranty and Maintenance Instructions

91.1201 Applicability.
91.1202 Definitions.
91.1203 Emission warranty, warranty period.
91.1204 Furnishing of maintenance and use instructions to ultimate purchaser.

Subpart N—In-Use Credit Program for New Marine Engines

91.1301 Applicability.
91.1302 Definitions.
91.1303 General provisions.
91.1304 Averaging.
91.1305 Banking.
91.1306 Trading.
91.1307 Credit calculation.
91.1308 Maintenance of records.
91.1309 Reporting requirements.
91.1310 Notice of opportunity for hearing.

AUTHORITY: Secs. 203, 204, 205, 206, 207, 208, 209, 213, 215, 216, and 301(a) of the Clean Air Act, as amended (42 U.S.C. 7522, 7523, 7524, 7525, 7541, 7542, 7543, 7547, 7549, 7550, and 7601(a)).

SOURCE: 61 FR 52102, Oct. 4, 1996, unless otherwise noted.

EFFECTIVE DATE NOTE: At 61 FR 52102, Oct. 4, 1996, part 91 was added. This part contains information collection and recordkeeping requirements and will not become effective until approval has been given by the Office of Management and Budget.

Subpart A—General

§ 91.1 Applicability.

(a) This part and all its subparts apply to marine spark-ignition engines used to propel marine vessels as defined in the General Provisions of the United States Code, 1 U.S.C.3 (1992), unless otherwise indicated.

(b) Sterndrive and inboard engines are exempt from this part.

(c) Existing technology OB/PWC are exempt from § 91.112 and subparts D, E, F, G, I (§§ 91.803 through 91.805), J, M and N through model year 2003.

§ 91.2 Applicable date.

This part applies to marine spark-ignition engines beginning with the 1998 model year, except where otherwise specified.

§ 91.3 Definitions.

The following definitions apply to this part 91. All terms not defined herein have the meaning given them in the Act.

Act means the Clean Air Act, as amended, 42 U.S.C. 7401 *et seq.*

Adjustable parameter means any device, system, or element of design which is physically capable of being adjusted (including those which are difficult to access) and which, if adjusted, may affect emissions or engine performance during emission testing or normal in-use operation.

Administrator means the Administrator of the Environmental Protection Agency or his or her authorized representative.

Auxiliary emission control device means any element of design that senses temperature, engine speed, engine RPM, transmission gear, or any other parameter for the purpose of activating, modulating, delaying, or deactivating the operation of any part of the emission control system.

Certification means, with respect to new SI marine engines, obtaining a certificate of conformity for an engine family complying with the marine SI

engine emission standards and requirements specified in this part.

Emission control system means any device, system, or element of design which controls or reduces the emission of substances from an engine.

Engine as used in this part, refers to marine SI engine.

Engine family means a group of engines, as specified in § 91.115.

EPA enforcement officer means any officer, employee, or authorized representative of the U.S. Environmental Protection Agency so designated in writing by the Administrator (or by his or her designee).

Exhaust emissions means matter emitted into the atmosphere from any opening downstream from the exhaust port of a marine engine.

Existing technology OB/PWC means an outboard engine or a personal watercraft engine which was in production for the 1997 or any previous model years and that did not utilize newer technologies such as four-stroke technology, direct-injection two-stroke technology, catalyst technology, or other technology used to comply with emission standards which the Administrator determines is a new type of OB/PWC technology.

Family Emission Limit (*FEL*) means an emission level that is declared by the manufacturer to serve in lieu of an emission standard for certification and for the averaging, banking, and trading program. A FEL must be expressed to the same number of decimal places as the applicable emission standard.

Fuel system means all components involved in the transport, metering, and mixture of the fuel from the fuel tank to the combustion chamber(s) including the following: Fuel tank, fuel tank cap, fuel pump, fuel lines, oil injection metering system, carburetor or fuel injection components, and all fuel system vents.

Gross power means the power measured at the crankshaft or its equivalent (for outboards, the power may be measured at the propeller shaft), the engine being equipped only with the standard accessories (such as oil pumps, coolant pumps, and so forth) necessary for its operation on the test bed.

Identification number means a unique specification (for example, model number/serial number combination) which allows a particular marine SI engine to be distinguished from other similar engines.

Inboard engine means a four stroke marine SI engine that is designed such that the propeller shaft penetrates the hull of the marine vessel while the engine and the remainder of the drive unit is internal to the hull of the marine vessel.

Marine spark-ignition engine means any engine used to propel a marine vessel, which utilizes the spark-ignition combustion cycle.

Marine engine manufacturer means any person engaged in the manufacturing or assembling of new marine SI engines or the importing of such engines for resale, or who acts for and is under the control of any such person in connection with the distribution of such engines. A marine SI engine manufacturer does not include any dealer with respect to new marine SI engines received by such person in commerce.

Marine vessel means every description of watercraft or another artificial contrivance used, or capable of being used, as a means of transportation on water, as defined in 1 U.S.C. 3 (1992).

Marine vessel manufacturer means any person engaged in the manufacturing or assembling of new marine vessels or importing such marine vessels for resale, or who acts for and is under the control of any such person in connection with the distribution of such vehicles. A marine vessel manufacturer does not include any dealer with respect to new marine vessels received by such person in commerce.

Model year means the manufacturer's annual new model production period which includes January 1 of the calendar year for which the model year is named, ends no later than December 31 of the calendar year, and does not begin earlier than January 2 of the previous calendar year. Where a manufacturer has no annual new model production period, model year means the calendar year.

New, for purposes of this part, means a nonroad engine, nonroad vehicle, or nonroad equipment the equitable or legal title to which has never been transferred to an ultimate purchaser. Where the equitable or legal title to the engine, vehicle or equipment is not

transferred to an ultimate purchaser until after the engine, vehicle, or equipment is placed into service, then the engine, vehicle, or equipment will no longer be new after it is placed into service. A nonroad engine, vehicle, or equipment is placed into service when it is used for its functional purposes. With respect to imported nonroad engines, nonroad vehicles, or nonroad equipment, the term ''new'' means an engine, vehicle, or piece of equipment that is not covered by a certificate of conformity issued under this part at the time of importation, and that is manufactured after the effective date of a regulation issued under this part which is applicable to such engine, vehicle, or equipment, or which would be applicable to such engine, vehicle, or equipment had it been manufactured for importation into the United States.

Nonroad engine has the meaning as defined in 40 CFR 89.2.

Nonroad vehicle has the meaning as defined in 40 CFR 89.2.

Nonroad equipment has the meaning as defined in 40 CFR 89.2.

Operating hours means:

(1) For engine storage areas or facilities, all times during which personnel other than custodial personnel are at work in the vicinity of the storage area or facility and have access to it.

(2) For all other areas or facilities, all times during which an assembly line is in operation or all times during which testing, maintenance, service accumulation, production or compilation of records, or any other procedure or activity related to certification testing, to translation of designs from the test stage to the production stage, or to engine manufacture or assembly is being carried out in a facility.

Outboard engine is a marine SI engine that, when properly mounted on a marine vessel in the position to operate, houses the engine and drive unit external to the hull of the marine vessel.

Personal watercraft engine (PWC) is a marine SI engine that does not meet the definition of outboard engine, inboard engine or sterndrive engine, except that the Administrator in his or her discretion may classify a PWC as an inboard or sterndrive engine if it is comparable in technology and emissions to an inboard or sterndrive engine.

Presentation of credentials means the display of the document designating a person as an EPA enforcement officer or EPA authorized representative.

Scheduled maintenance means any adjustment, repair, removal, disassembly, cleaning, or replacement of components or systems required by the manufacturer to be performed on a periodic basis to prevent part failure or marine vessel or engine malfunction, or those actions anticipated as necessary to correct an overt indication of malfunction or failure for which periodic maintenance is not appropriate.

Sterndrive engine means a four stroke marine SI engine that is designed such that the drive unit is external to the hull of the marine vessel, while the engine is internal to the hull of the marine vessel.

Test engine means the engine or group of engines that a manufacturer uses during certification, production line and in-use testing to determine compliance with emission standards.

Ultimate purchaser means, with respect to any new marine SI engine the first person who in good faith purchases such new marine SI engine for purposes other than resale.

Used solely for competition means exhibiting features that are not easily removed and that would render its use other than in competition unsafe, impractical, or highly unlikely.

Warranty period means the period of time the engine or part is covered by the warranty provisions.

§ 91.4 Acronyms and abbreviations.

The following acronyms and abbreviations apply to this part 91.

AECD—Auxiliary emission control device

ASME—American Society of Mechanical Engineers

ASTM—American Society for Testing and Materials

CAA—Clean Air Act

CAAA—Clean Air Act Amendments of 1990

CLD—chemiluminescent detector

CO—Carbon monoxide

CO_2—Carbon dioxide

EPA—Environmental Protection Agency
FEL—Family Emission Limit
g/kw-hr—grams per kilowatt hour
HC—hydrocarbons
HCLD—heated chemiluminescent detector
HFID—heated flame ionization detector
ICI—Independent Commercial Importer
MY—Model Year
NDIR—non-dispersive infrared analyzer
NIST—National Institute for Standards and Testing
NO—Nitric oxide
NO_2—Nitrogen dioxide
NO_X—Oxides of nitrogen
OB—Outboard engine
O_2—Oxygen
OEM—Original engine manufacturer
PMD—paramagnetic detector
PWC—personal watercraft
RPM—revolutions per minute
SAE—Society of Automotive Engineers
SEA—Selective Enforcement Auditing
SI—Spark-ignition
U.S.C.—United States Code
VOC—Volatile organic compounds
ZROD—zirconium dioxide sensor

§91.5 Table and figure numbering; position.

(a) Tables for each subpart appear in an appendix at the end of the subpart. Tables are numbered consecutively by order of appearance in the appendix. The table title will indicate the topic.

(b) Figures for each subpart appear in an appendix at the end of the subpart. Figures are numbered consecutively by order or appearance in the appendix. The figure title will indicate the topic.

§91.6 Reference materials.

(a) *Incorporation by reference.* The documents in paragraph (b) of this section have been incorporated by reference. The incorporation by reference was approved by the Director of the Federal Register in accordance with 5 U.S.C. 552(a) and 1 CFR part 51. Copies may be inspected at U.S. EPA, OAR, Air and Radiation Docket and Information Center, 401 M Street, SW., Washington, DC 20460, or at the Office of the Federal Register, 800 N. Capitol St. NW., 7th Floor, Suite 700, Washington, DC 20001.

(b) The following paragraphs and tables set forth the material that has been incorporated by reference in this part.

(1) *ASTM material.* The following table sets forth material from the American Society for Testing and Materials which has been incorporated by reference. The first column lists the number and name of the material. The second column lists the section(s) of this part, other than §91.6, in which the matter is referenced. The second column is presented for information only and may not be all inclusive. Copies of these materials may be obtained from American Society for Testing and Materials, 1916 Race St., Philadelphia, PA 19103.

Document number and name	40 CFR part 91 reference
ASTM D86–93:	
Standard Test Method for Distillation of Petroleum Products	Appendix A to Subpart D.
ASTM D323–90:	
Standard Test Method for Vapor Pressure of Petroleum Products (Reid Method).	Appendix A to Subpart D.
ASTM D1319–93:	
Standard Test Method for Hydrocarbon Types in Liquid Petroleum Products by Fluorescent Indicator Adsorption.	Appendix A to Subpart D.
ASTM D2622–92:	
Standard Test Method for Sulfur in Petroleum Products by X-Ray Spectrometry.	Appendix A to Subpart D.
ASTM D2699–92:	
Standard Test Method for Knock Characteristics of Motor Fuels by the Research Method.	Appendix A to Subpart D.
ASTM D2700–92:	
Standard Test Method for Knock Characteristics of Motor and Aviation Fuels by the Motor Method.	Appendix A to Subpart D.
ASTM D3231–89:	
Standard Test Method for Phosphorus in Gasoline	Appendix A to Subpart D.
ASTM D3606–92:	
Standard Test Method for Determination of Benzene and Toluene in Finished Motor and Aviation Gasoline by Gas Chromatography.	Appendix A to Subpart D.

Document number and name	40 CFR part 91 reference
ASTM E29–93a: Standard Practice for Using Significant Digits in Test Data to Determine Conformance with Specifications.	91.207; 91.120; 91.509; 91.1307.

(2) *SAE material.* The following table sets forth material from the Society of Automotive Engineers which has been incorporated by reference. The first column lists the number and name of the material. The second column lists the section(s) of this part, other than § 91.7, in which the matter is referenced. The second column is presented for information only and may not be all inclusive. Copies of these materials may be obtained from Society of Automotive Engineers International, 400 Commonwealth Dr., Warrendale, PA 15096–0001.

Document number and name	40 CFR part 91 reference
SAE J1228/ISO 8665 November 1991 Small Craft-Marine Propulsion Engine and Systems-Power Measurements and Declarations.	91.104, 91.115; 91.118; 91.207; 91.1307.
SAE J1930 June 1993 Electrical/Electronic Systems Diagnostic Terms, Definitions, Abbreviations and Acronyms.	91.113.
SAE Paper 770141 Optimization of a Flame Ionization Detector for Determination of Hydrocarbon in Diluted Automotive Exhausts, Glenn D. Reschke, 1977.	91.316

§ 91.7 Treatment of confidential information.

(a) Any manufacturer may assert that some or all of the information submitted pursuant to this part is entitled to confidential treatment as provided by part 2, subpart B, of this chapter.

(b) Any claim of confidentiality must accompany the information at the time it is submitted to EPA.

(c) To assert that information submitted pursuant to this subpart is confidential, a manufacturer must indicate clearly the items of information claimed confidential by marking, circling, bracketing, stamping, or otherwise specifying the confidential information. Furthermore, EPA requests, but does not require, that the submitter also provide a second copy of its submittal from which all confidential information has been deleted. If a need arises to publicly release nonconfidential information, EPA will assume that the submitter has accurately deleted the confidential information from this second copy.

(d) If a claim is made that some or all of the information submitted pursuant to this subpart is entitled to confidential treatment, the information covered by that confidentiality claim will be disclosed by the Administrator only to the extent and by means of the procedures set forth in part 2, subpart B, of this chapter.

(e) Information provided without a claim of confidentiality at the time of submission may be made available to the public by EPA without further notice to the submitter, in accordance with § 2.204(c)(2)(i)(A) of this chapter.

Subpart B—Emission Standards and Certification Provisions

§ 91.101 Applicability.

The requirements of this subpart B are applicable to all new marine spark-ignition engines subject to the provisions of subpart A of this part 91.

§ 91.102 Definitions.

The definitions in subpart A of this part 91 apply to this subpart. All terms not defined herein or in subpart A of this part have the meaning given them in the Act.

§ 91.103 Averaging, banking, and trading of exhaust emission credits.

Regulations regarding averaging, banking, and trading provisions along with applicable recordkeeping requirements are found in subpart C of this part.

§ 91.104 Exhaust emission standards for outboard and personal watercraft engines.

(a) New marine spark-ignition outboard and personal watercraft engines for use in the U.S. must meet the following exhaust emission standards for

$HC+NO_X$. The exhaust emission standard for each model year is provided below. It is also used as input to the calculation procedure in §91.207 to determine compliance with the corporate average $HC+NO_X$ exhaust emission standard.

HYDROCARBON PLUS OXIDES OF NITROGEN EXHAUST EMISSION STANDARDS

[grams per kilowatt-hour]

Model year	P < 4.3 kW $HC+NO_X$ emission standard by model year	P > 4.3 kW $HC+NO_X$ emission standard by model year
1998	278.00	$(0.917 \times (151 + 557/P^{0.9})) + 2.44$
1999	253.00	$(0.833 \times (151 + 557/P^{0.9})) + 2.89$
2000	228.00	$(0.750 \times (151 + 557/P^{0.9})) + 3.33$
2001	204.00	$(0.667 \times (151 + 557/P^{0.9})) + 3.78$
2002	179.00	$(0.583 \times (151 + 557/P^{0.9})) + 4.22$
2003	155.00	$(0.500 \times (151 + 557/P^{0.9})) + 4.67$
2004	130.00	$(0.417 \times (151 + 557/P^{0.9})) + 5.11$
2005	105.00	$(0.333 \times (151 + 557/P^{0.9})) + 5.56$
2006 and later	81.00	$(0.250 \times (151 + 557/P^{0.9})) + 6.00$

where:

P = the average power of an engine family in kW (sales weighted). The power of each configuration is the rated output in kilowatts as determined by SAE J1228. This procedure has been incorporated by reference. See §91.6.

(b) Exhaust emissions are measured using the procedures set forth in subpart E of this part.

(c) Manufacturers must designate a Family Emission Limit (FEL) for $HC+NO_X$ for every engine family. The FEL may be equal to the emission standard in paragraph (a) of this section. The FEL established through certification serves as the emission standard for the engine family and emissions may not exceed the FEL levels for $HC+NO_X$ for all engines sold in the engine family, for their useful life.

(d) A manufacturer must comply with a corporate average $HC+NO_X$ emission standard as determined in accordance with subpart C §91.207.

§91.105 Useful life period, recall, and warranty periods.

(a) The useful life for PWC engines is a period of 350 hours of operation or 5 years of use, whichever first occurs. The useful life for Outboard marine spark-ignition engines is a period of 350 hours of operation or 10 years of use, whichever first occurs.

(b) PWC engines are subject to recall testing for a period of 350 hours of operation or 5 years of use, whichever first occurs. Outboard marine spark-ignition engines are subject to recall testing for a period of 350 hours of operation or 10 years of use, whichever first occurs. However, for purposes of this part only, if the Administrator should issue a nonconformity determination, then only those engines that are within the useful life as of the date of the nonconformity determination are subject to recall repair requirements.

(c) Warranty periods are set out in subpart M of this part.

§91.106 Certificate of conformity.

(a) Every manufacturer of a new marine SI engine produced during or after the 1998 model year for outboard engines and the 1999 model year for PWC engines, must obtain a certificate of conformity covering each engine family. The certificate of conformity must be obtained from the Administrator prior to selling, offering for sale, introducing into commerce, or importing into the United States the new marine SI engine.

(b) The certificate of conformity is valid for the model year for which it is designated.

§91.107 Application for certification.

(a) For each engine family, the engine manufacturer must submit to the Administrator a completed application for a certificate of conformity, except that with respect to an existing technology OB/PWC engine a manufacturer

may, in lieu of providing such application, submit to the Administrator summary testing and other information as determined by the Administrator.

(b) The application must be approved and signed by the authorized representative of the manufacturer.

(c) The application must be updated and corrected by amendment as provided in §91.122 to accurately reflect the manufacturer's production.

(d) Required content. Each application must include the following information:

(1) A description of the basic engine design including, but not limited to, the engine family specifications;

(2) An explanation of how the emission control system operates, including a detailed description of all emission control system components (detailed component calibrations are not required to be included, however they must be provided if requested), each auxiliary emission control device (AECD), and all fuel system components to be installed on any production or test engine(s);

(3) Proposed test fleet selection and the rationale for the test fleet selection;

(4) Special or alternative test procedures, if applicable;

(5) The description of the operating cycle and the service accumulation period necessary to break in the test engine(s) and stabilize emission levels and any maintenance scheduled;

(6) A description of all adjustable operating parameters, including the following:

(i) The nominal or recommended setting and the associated production tolerances;

(ii) The intended physically adjustable range;

(iii) The limits or stops used to establish adjustable ranges;

(iv) Production tolerances of the limits or stops used to establish each physically adjustable range; and

(v) Information relating to why the physical limits or stops used to establish the physically adjustable range of each parameter, or any other means used to inhibit adjustment, are effective in preventing adjustment of parameters to settings outside the manufacturer's intended physically adjustable ranges on in-use engines;

(7) Regarding the averaging, banking, and trading provisions, the information specified in §91.208;

(8) The proposed maintenance and use instructions the manufacturer will furnish to the ultimate purchaser of each new engine and the proposed emission control label;

(9) All test data, for HC, CO and NO_X, obtained by the manufacturer on each test engine;

(10) A statement that the test engine(s), as described in the manufacturer's application for certification, has been tested in accordance with the applicable test procedures, utilizing the fuels and equipment described in the application, and that on the basis of such tests the engine(s) conforms to the requirements of this part; and

(11) An unconditional statement certifying that all engines in the engine family comply with all requirements of this part and the Clean Air Act.

(e) At the Administrator's request, the manufacturer must supply such additional information as may be required to evaluate the application including, but not limited to, projected marine SI engine production.

(f) (1) The Administrator may modify the information submission requirements of paragraph (d) of this section, provided the information specified therein is maintained by the engine manufacturer as required by §91.121, and amended, updated, or corrected as necessary.

(2) For the purposes of this paragraph, §91.121(a)(1) includes all information specified in paragraph (d) of this section whether or not such information is actually submitted to the Administrator for any particular model year.

(3) The Administrator may review an engine manufacturer's records at any time.

§91.108 Certification.

(a) If, after a review of the manufacturer's submitted application, or with respect to an existing technology OB/PWC engine manufacturer's summary information submitted pursuant to §91.107(a), information obtained from

any inspection, and such other information as the Administrator may require, the Administrator determines that the application or summary information is complete and that the engine family meets the requirements of this part and the Clean Air Act, the Administrator shall issue a certificate of conformity for the engine family.

(b) The Administrator shall give a written explanation when certification is denied. The manufacturer may request a hearing on a denial. (*See* §91.124 for procedure.)

§91.109 Requirement of certification—closed crankcase.

(a) An engine's crankcase must be closed.

(b) For purposes of this section, *crankcase* means the housing for the crankshaft and other related internal parts.

§91.110 Requirement of certification—prohibited controls.

(a) An engine may not be equipped with an emission control device, system, or element of design for the purpose of complying with emission standards if such device, system, or element of design will cause or contribute to an unreasonable risk to public health, welfare, or safety in its operation or function.

(b) An engine with an emission control device, system, or element of design may not emit any noxious or toxic substance which would not be emitted in the operation of such engine in the absence of the device, system, or element of design except as specifically permitted by regulation.

§91.111 Requirement of certification—prohibition of defeat devices.

(a) An engine may not be equipped with a defeat device.

(b) For purposes of this section, *defeat device* means any device, system, or element of design which senses operation outside normal emission test conditions and reduces emission control effectiveness.

(1) Defeat device includes any auxiliary emission control device (AECD) that reduces the effectiveness of the emission control system under conditions which may reasonably be expected to be encountered in normal operation and use, unless such conditions are included in the test procedure.

(2) Defeat device does not include such items which either operate only during engine starting or are necessary to protect the engine (or vehicle or equipment in which it is installed) against damage or accident during its operation.

§91.112 Requirement of certification—adjustable parameters.

(a) Engines equipped with adjustable parameters must comply with all requirements of this subpart for any adjustment in the physically available range.

(b) An operating parameter is not considered adjustable if it is permanently sealed by the manufacturer or otherwise not normally accessible using ordinary tools.

(c) The Administrator may require that adjustable parameters be set to any specification within the adjustable range during certification, production line testing, selective enforcement auditing or any in-use testing to determine compliance with the requirements of this part.

§91.113 Requirement of certification—emission control information label and engine identification number.

(a) The engine manufacturer must affix at the time of manufacture a permanent and legible label identifying each engine. The label must meet the following requirements:

(1) Be attached in such a manner that it cannot be removed without destroying or defacing the label;

(2) Be durable and readable for the entire engine life;

(3) Be secured to an engine part necessary for normal engine operation and not normally requiring replacement during engine life;

(4) Be written in English; and

(5) Be located so as to be readily visible to the average person after the engine is installed in the marine vessel.

(b) If the marine vessel obscures the label on the engine, the marine vessel manufacturer must attach a supplemental label so that this label is readily visible to the average person. The supplemental label must:

(1) Be attached in such a manner that it cannot be removed without destroying or defacing the label;

(2) Be secured to a marine vessel part necessary for normal operation and not normally requiring replacement during the marine vessel life; and

(3) Be identical to the label which was obscured.

(c) The label must contain the following information:

(1) The heading ''Emission Control Information;''

(2) The full corporate name and trademark of the engine manufacturer;

(3) The statement, ''This (vessel's engine or engine, as applicable) is certified to operate on (specify operating fuel(s));''

(4) Identification of the Exhaust Emission Control System (Abbreviations may be used and must conform to the nomenclature and abbreviations provided in SAE J1930. This procedure has been incorporated by reference. *See* § 91.6.;

(5) All engine lubricant requirements;

(6) date of manufacture [day(optional), month and year];

(7) The statement ''This engine conforms to [model year] U.S. EPA regulations for marine SI engines.'';

(8) Family Emission Limits (FELs);

(9) EPA standardized engine family designation;

(10) Engine displacement [in cubic centimeters]; and

(11) Advertised power;

(12) Engine tuneup specifications and adjustments. These should indicate the proper transmission position during tuneup, and accessories, if any, that should be in operation;

(13) Fuel requirements;

(14) Other information concerning proper maintenance and use or indicating compliance or noncompliance with other standards may be indicated on the label.

(d) If there is insufficient space on the engine to accommodate a label including all the information required in paragraph (c) of this section, the manufacturer may delete or alter the label as indicated in this paragraph. The information deleted from the label must appear in the owner's manual.

(1) Exclude the information required in paragraphs (c) (3), (4), and (5) of this section. The fuel or lubricant may be specified elsewhere on the equipment.

(2) Exclude the information required by paragraph (c)(6) of this section, if the date the engine was manufactured is stamped on the engine.

(3) For existing technology OB/PWC only, exclude the information required by paragraphs (c) (10), (11), (13), and (14) of this section.

(e) The Administrator may, upon request, waive or modify the label content requirements of paragraphs (c) and (d) of this section, provided that the intent of such requirements is met.

(f) Engine Identification Number. Each engine must have a legible, unique engine identification number permanently affixed to or engraved on the engine.

§ 91.114 Requirement of certification—supplying production engines upon request.

Upon the Administrator's request, the manufacturer must supply a reasonable number of production engines for testing and evaluation. These engines must be representative of typical production and supplied for testing at such time and place and for such reasonable periods as the Administrator may require.

§ 91.115 Certification procedure—determining engine power and engine families.

(a) Engine power must be calculated using SAE J1228. This procedure has been incorporated by reference. *See* § 91.6.

(b) The manufacturer's product line must be divided into engine families as specified by paragraph (c) of this section, comprised of engines expected to have similar emission characteristics throughout their useful life periods.

(c) To be classed in the same engine family, engines must be identical in all of the following applicable respects:

(1) The combustion cycle;

(2) The cooling mechanism;

(3) The cylinder configuration (inline, vee, opposed, bore spacings, and so forth);

(4) The number of cylinders;

(5) The number of catalytic converters, location; volume, and composition; and

(6) The thermal reactor characteristics.

(d) At the manufacturer's request, engines identical in all the respects listed in paragraph (c) of this section may be further divided into different engine families if the Administrator determines that they may be expected to have different emission characteristics. This determination is based upon the consideration of features such as:

(1) The bore and stroke;

(2) The combustion chamber configuration;

(3) The intake and exhaust timing method of actuation (poppet valve, reed valve, rotary valve, and so forth);

(4) The intake and exhaust valve or port sizes, as applicable;

(5) The fuel system;

(6) The exhaust system; and

(7) The method of air aspiration.

(e) Where engines are of a type which cannot be divided into engine families based upon the criteria listed in paragraph (c) of this section, the Administrator shall establish families for those engines based upon the features most related to their emission characteristics.

(f) Upon a showing by the manufacturer that the emission characteristics during the useful life are expected to be similar, engines differing in one or more of the characteristics in paragraph (c) of this section may be grouped in the same engine family.

(g) Upon a showing by the manufacturer that the emission characteristics during the useful life are expected to be dissimilar, engines identical in all the characteristics in paragraph (c) of this section may be divided into separate engine families.

§91.116 Certification procedure—test engine selection.

(a) The manufacturer must select, from each engine family, a test engine of a configuration that the manufacturer deems to be most likely to exceed the Family Emission Limit (FEL).

(b) At the manufacturer's option, the criterion for selecting the worst case engine may be that engine configuration which has the highest weighted brake-specific fuel consumption over the appropriate engine test cycle.

(c) The test engine must be constructed to be representative of production engines.

§91.117 Certification procedure—service accumulation.

(a)(1) Any engine required to be tested under §91.118 must be operated with all emission control systems operating properly for a period sufficient to stabilize emissions prior to such testing.

(2) A manufacturer may elect to consider emission levels as stabilized when the test engine has accumulated 12 hours of service.

(b) No maintenance, other than recommended lubrication and filter changes, may be performed during service accumulation without the Administrator's approval.

(c) Service accumulation is to be performed in a manner using good engineering judgment to ensure that emissions are representative of production engines.

(d) The manufacturer must maintain, and provide to the Administrator if requested, records stating the rationale for selecting a service accumulation period different than 12 hours and records describing the method used to accumulate hours on the test engine(s).

§91.118 Certification procedure—testing.

(a) *Manufacturer testing.* The manufacturer must test the test engine using the specified test procedures and appropriate test cycle. All test results must be reported to the Administrator.

(1) The test procedures to be used are detailed in subpart E of this part.

(2) Emission test equipment provisions are described in subpart D of this part.

(b) *Administrator testing.* (1) The Administrator may require that any one or more of the test engines be submitted to the Administrator, at such place or places as the Administrator may designate, for the purposes of conducting emission tests. The Administrator may specify that testing will be conducted at the manufacturer's facility, in which case instrumentation and equipment specified by the Administrator must be made available by the manufacturer for test operations. Any testing conducted at a manufacturer's

facility must be scheduled by the manufacturer as promptly as possible.

(2)(i) Whenever the Administrator conducts a test on a test engine, the results of that test will, unless subsequently invalidated by the Administrator, comprise the official data for the engine and the manufacturer's data will not be used in determining compliance with the Family Emission Limit (FEL).

(ii) Prior to the performance of such a test, the Administrator may adjust or cause to be adjusted any adjustable parameter of the test engine which the Administrator has determined to be subject to adjustment for testing, to any setting within the physically adjustable range of that parameter, to determine whether the engine conforms to the applicable Family Emission Limit (FEL).

(iii) For those engine parameters which the Administrator has not determined to be subject to adjustment for testing, the test engine presented to the Administrator for testing will be calibrated within the production tolerances applicable to the manufacturer specification shown on the engine label, as specified in the application for certification.

(c) *Use of carryover test data.* In lieu of testing, the manufacturer may submit, with the Administrator's approval, emission test data used to certify substantially similar engine families in previous years. This ''carryover'' test data is only allowable if the data shows the test engine would fully comply with the applicable Family Emission Limit (FEL).

(d) *Scheduled maintenance during testing.* No scheduled maintenance may be performed during testing of the engine.

(e) *Unscheduled maintenance on test engines.* (1) Manufacturers may not perform any unscheduled engine, emission control system, or fuel system adjustment, repair, removal, disassembly, cleaning, or replacement on a test engine without the advance approval of the Administrator.

(2) The Administrator may approve such maintenance if:

(i) A preliminary determination has been made that a part failure or system malfunction, or the repair of such failure or malfunction, does not render the engine unrepresentative of engines in use, and does not require direct access to the combustion chamber; and

(ii) A determination has been made that the need for maintenance or repairs is indicated by an overt malfunction such as persistent misfire, engine stall, overheating, fluid leakage, or loss of oil pressure.

(3) Emission measurements may not be used as a means of determining the need for unscheduled maintenance under paragraph (e)(2) of this section.

(4) The Administrator must have the opportunity to verify the extent of any overt indication of part failure (for example, misfire, stall), or an activation of an audible and/or visual signal, prior to the manufacturer performing any maintenance related to such overt indication or signal.

(5) Unless approved by the Administrator prior to use, engine manufacturers may not use any equipment, instruments, or tools to identify malfunctioning, maladjusted, or defective engine components unless the same or equivalent equipment, instruments, or tools are available at dealerships and other service outlets and are used in conjunction with scheduled maintenance on such components.

(6) If the Administrator determines that part failure or system malfunction occurrence and/or repair rendered the engine unrepresentative of production engines, the engine may not be used as a test engine.

(7) Unless waived by the Administrator, complete emission tests are required before and after any engine maintenance which may reasonably be expected to affect emissions.

(f) *Engine failure.* A manufacturer may not use as a test engine any engine which incurs major mechanical failure necessitating disassembly of the engine. This prohibition does not apply to failures which occur after completion of the service accumulation period.

(g) In lieu of providing or generating emission data under this section for existing technology, the Administrator may allow the manufacturer to demonstrate (on the basis of previous emission tests, development tests, or other testing information) that the engine will conform with the applicable FEL.

(h)(1) Manufacturers may select an FEL for existing technology OB/PWC through:

(i) Model year 2000 based on the function $151+557/P^{0.9}$ where P=average power of an engine family in kW (sales weighted). The power of each configuration is the rated output in kilowatts as determined by SAE J1228. (This procedure has been incorporated by reference. See §91.6). The certificate of conformity would be conditioned by requirements that the manufacturer submit test data, as determined appropriate by the Administrator under §91.118(h) by the end of model year 2000; that the FEL is revised and approved by EPA to reflect the test data; that the credits associated with the engine family are recalculated based on the difference between the old FEL and the new FEL; and that the new FEL applies to all engines covered by the certificate of conformity; or

(ii) Model year 2003 based on good engineering judgement.

(2) Upon request by the manufacturer, the Administrator has the discretion to extend the time period set forth in paragraph (h)(1) of this section for a specific engine family up to model year 2005 if the Administrator determines that an engine family will be phased out of U.S. production by model year 2005. As a condition to being granted such an extension, the manufacturer must discontinue U.S. production according to the schedule upon which the Administrator based the extension. Failure to do so by the manufacturer will void the certificate of conformity *ab initio.*

(i) A manufacturer request under paragraph (h)(2) of this section must be in writing and must apply to a specific engine family. The request must identify the engine family designation, the rationale supporting the FEL choice, the type of information used as a basis for the FEL (e.g., previous emission tests, development tests), the specific source of the information including when the information was generated, the schedule for phasing the engine family out of U.S. production, and any other information the Administrator may require.

§91.119 Certification procedure—use of special test procedures.

(a) *Use of special test procedures by EPA.* The Administrator may establish special test procedures for any engine that the Administrator determines is not susceptible to satisfactory testing under the specified test procedures set forth in subpart E of this part.

(b) *Use of alternative test procedures by an engine manufacturer.* (1) A manufacturer may elect to use an alternative test procedure provided that it yields results equivalent to the results from the specified test procedure in subpart E, its use is approved in advance by the Administrator, and the basis for equivalent results with the specified test procedures is fully described in the manufacturer's application.

(2) An engine manufacturer electing to use alternate test procedures is solely responsible for the results obtained. The Administrator may reject data generated under test procedures which do not correlate with data generated under the specified procedures.

§91.120 Compliance with Family Emission Limits over useful life.

(a) If all test engines representing an engine family have emissions, as determined in paragraph (c)(3)(iii) of this section, less than or equal to the applicable Family Emission Limit (FEL) for each pollutant as determined according to §91.104 (c), that family complies with the Family Emission Limit .

(b) If any test engine representing an engine family has emissions (as determined in paragraph (c)(3)(iii) of this section, greater than the applicable Family Emission Limit for any pollutant as determined according to §91.104(c), that family will be deemed not in compliance with the Family Emission Limits.

(c)(1) The engine Family Emission Limits (FELs) apply to the emissions of engines for their useful lives.

(2) Since emission control efficiency generally decreases with the accumulation of service on the engine, deterioration factors must be used in combination with emission data engine test results as the basis for determining compliance with the standards.

(3)(i) Paragraph (c)(3)(ii) of this section describes the procedure for determining compliance of an engine with family emission limits, based on deterioration factors supplied by the manufacturer.

(ii) Separate exhaust emission deterioration factors, determined by the manufacturer, must be supplied for each engine family. The deterioration factors must be applied as follows:

(A) For marine spark-ignition engines not utilizing aftertreatment technology (for example, catalytic converters), the official exhaust emission results for each emission data engine at the selected test point are adjusted by adding the appropriate deterioration factor to the results. However, if the deterioration factor supplied by the manufacturer is less than zero, it is zero for the purposes of this paragraph.

(B) For marine spark-ignition engines utilizing aftertreatment technology (for example, catalytic converters), the official exhaust emission results for each emission data engine at the selected test point are adjusted by multiplying the results by the appropriate deterioration factor. However, if the deterioration factor supplied by the manufacturer is less than one, it is one for the purposes of this paragraph.

(iii) The emission values to compare with the Family Emission Limits (FELs) are the adjusted emission values of paragraph (c)(3)(ii) of this section, rounded to the same number of significant figures as contained in the applicable standard in accordance with ASTM E 29–93a, for each emission data engine. This procedure has been incorporated by reference. See § 91.6.

§ 91.121 Certification procedure—recordkeeping.

(a) The engine manufacturer must maintain the following adequately organized records:

(1) Copies of all applications and summary information, as applicable, filed with the Administrator;

(2) A copy of all data obtained through the production line and in-use testing programs; and

(3) A detailed history of each test engine used for certification including the following:

(i) A description of the test engine's construction, including a general description of the origin and buildup of the engine, steps taken to insure that it is representative of production engines, description of components specially built for the test engine, and the origin and description of all emission-related components;

(ii) A description of the method used for engine service accumulation, including date(s) and the number of hours accumulated;

(iii) A description of all maintenance, including modifications, parts changes, and other servicing performed, and the date(s), and reason(s) for such maintenance;

(iv) A description of all emission tests performed, including routine and standard test documentation, as specified in subpart E of this part, date(s), and the purpose of each test;

(v) A description of all tests performed to diagnose engine or emission control performance, giving the date and time of each and the reason(s) for the test; and

(vi) A description of any significant event(s) affecting the engine during the period covered by the history of the test engine but not described by an entry under one of the previous paragraphs of this section.

(b) Routine emission test data, such as test cell temperature and relative humidity at start and finish of test and raw emission results from each mode or test phase, must be retained for a period of one year after issuance of all certificates of conformity to which they relate. All other information specified in paragraph (a) of this section must be retained for a period of eight years after issuance of all certificates of conformity to which they relate.

(c) Records may be kept in any format and on any media, provided that, at the Administrator's request, organized, written records in English are promptly supplied by the manufacturer.

(d) The manufacturer must supply, at the Administrator's request, copies of any engine maintenance instructions or explanations issued by the manufacturer.

§91.122 Amending the application and certificate of conformity.

(a) The marine engine manufacturer must notify the Administrator

(1) When either an engine is to be added to a certificate of conformity or changes are to be made to a product line covered by a certificate of conformity which may potentially affect emissions, emissions durability, an emission related part, or the durability of an emission related part. Notification occurs when the manufacturer submits and EPA receives a request to amend the original application prior to either producing such engines or making such changes to a product line. For existing technology OB/PWC engines only, notification may occur periodically but must occur at least on a quarterly basis and may be submitted summarily as determined by the Administrator.

(2) When an FEL is changed for an engine family, as allowed under §91.203. Notification occurs when the manufacturer submits and EPA receives a request to amend the original application. The manufacturer may not change an FEL unless compliance under §91.207(b) is maintained through the use of the revised FEL.

(b) The request to amend the engine manufacturer's existing certificate of conformity must include the following information:

(1) A full description of the engine to be added or the change(s) to be made in production;

(2) The manufacturer's proposed test engine selection(s); and

(3) Engineering evaluations or reasons why the original test engine or FEL is or is not still appropriate.

(c) The Administrator may require the engine manufacturer to perform tests on an engine representing the engine to be added or changed.

(d) Decision by Administrator.

(1) Based on the submitted request and data derived from such testing as the Administrator may require or conduct, the Administrator must determine whether the proposed addition or change would still be covered by the certificate of conformity then in effect.

(2) If the Administrator determines that the new or changed engine(s) meets the requirements of this subpart and the Act, the appropriate certificate of conformity will be amended.

(3) If the Administrator determines that the new or changed engines would not be covered by the certificate of conformity, the Administrator must provide a written explanation to the engine manufacturer of his or her decision not to amend the certificate. The manufacturer may request a hearing on a denial. See §91.125.

(4) If the Administrator determines that the revised FEL meets the requirements of this subpart and the Act, the appropriate certificate of conformity will be amended to reflect the revised FEL. The certificate of conformity is revised conditional upon compliance under §91.207(b).

(e)(1) Alternatively, an engine manufacturer may make changes in or additions to production engines concurrently with requesting to amend the application or certification of conformity as set forth in paragraph (b) of this section, if the manufacturer determines that all affected engines will still meet applicable Family Emission Limits (FELs). The engine manufacturer must supply supporting documentation, test data, and engineering evaluations as appropriate to support its determination.

(2) If, after a review, the Administrator determines additional testing is required, the engine manufacturer must provide required test data within 30 days or cease production of the affected engines.

(3) If the Administrator determines that the affected engines do not meet applicable requirements, the Administrator will notify the engine manufacturer to cease production of the affected engines.

§91.123 Denial, revocation of certificate of conformity.

(a) If, after review of the engine manufacturer's application, request for certification, information obtained from any inspection, and any other information the Administrator may require, the Administrator determines that the test engine or engine family does not meet applicable requirements or the

Family Emission Limit (FEL), the Administrator will notify the manufacturer in writing, setting forth the basis for this determination.

(b) Notwithstanding the fact that engines described in the application may comply with all other requirements of this subpart, the Administrator may deny the issuance of or revoke a previously issued certificate of conformity if the Administrator finds any one of the following infractions to be substantial:

(1) The engine manufacturer submits false or incomplete information;

(2) The engine manufacturer denies an EPA enforcement officer or EPA authorized representative the opportunity to conduct authorized inspections;

(3) The engine manufacturer fails to supply requested information or amend its application to include all engines being produced;

(4) The engine manufacturer renders inaccurate any test data which it submits or otherwise circumvents the intent of the Act or this part;

(5) The engine manufacturer denies an EPA enforcement officer or EPA authorized representative reasonable assistance (as defined in § 91.505); or

(6) The engine manufacturer fails to initiate, perform or submit required data generated from the production line and in-use testing programs to EPA.

(c) If any manufacturer knowingly commits an infraction specified in paragraph (b)(1), (b)(4), or (b)(6) of this section or knowingly commits any other fraudulent act which results in the issuance of a certificate of conformity, or fails to comply with the conditions specified in §§ 91.203(f), 91.206(d), 91.208(c) or 91.209(g), the Administrator may void such certificate *ab initio*.

(d) When the Administrator denies, revokes, or voids *ab initio* a certificate of conformity, the engine manufacturer will be provided a written determination. The manufacturer may request a hearing on the Administrator's decision.

(e) Any revocation of a certificate of conformity extends no further than to forbid the introduction into commerce of those engines previously covered by the certificate which are still in the possession of the engine manufacturer, except in cases of such fraud or other misconduct that makes the certificate void *ab initio*.

§ 91.124 Request for hearing.

(a) An engine manufacturer may request a hearing on the Administrator's denial or revocation or voiding *ab initio* of a certificate of conformity.

(b) The engine manufacturer's request must be filed within 30 days of the Administrator's decision, be in writing, and set forth the manufacturer's objections to the Administrator's decision and data to support the objections.

(c) If, after review of the request and supporting data, the Administrator finds that the request raises a substantial and factual issue, the Administrator will grant the engine manufacturer's request for a hearing.

§ 91.125 Hearing procedures.

The hearing procedures set forth in §§ 91.513, 91.514, and 91.515 apply to this subpart.

§ 91.126 Right of entry and access.

Any engine manufacturer who has applied for certification of a new engine or engine family subject to certification testing under this subpart must admit or cause to be admitted to any applicable facilities during operating hours any EPA enforcement officer or EPA authorized representative as provided in § 91.505.

Subpart C—Averaging, Banking, and Trading Provisions

§ 91.201 Applicability.

The requirements of this subpart C are applicable to all marine spark-ignition engines subject to the provisions of subpart A of this part 91.

§ 91.202 Definitions.

The definitions in subpart A of this part apply to this subpart. The following definitions also apply to this subpart:

Averaging for marine SI engines means the exchange of emission credits

among engine families within a given manufacturer's product line.

Banking means the retention of marine SI engine emission credits by the manufacturer generating the emission credits for use in future model year averaging or trading as permitted by these regulations.

Eligible sales means marine SI engines sold for purposes of being used in the United States and include any engine introduced into commerce in the U.S. to be sold for use in the U.S.

Emission credits represent the amount of emission reduction or exceedance, by a marine SI engine family, below or above the applicable emission standard, respectively. Emission reductions below the standard are considered as ''positive credits,'' while emission exceedances above the standard are considered as ''negative credits.'' In addition, ''projected credits'' refer to emission credits based on the projected applicable production/sales volume of the engine family. ''Reserved credits'' are emission credits generated within a model year waiting to be reported to EPA at the end of the model year. ''Actual credits'' refer to emission credits based on actual applicable production/sales volume as contained in the end-of-year reports submitted to EPA. Some or all of these credits may be revoked if EPA review of the end-of-year reports or any subsequent audit action(s) uncovers problems or errors.

Point of first retail sale means the point at which the engine is first sold directly to an end user. Generally, this point is the retail boat or engine dealer. If the engine is sold first to a boat or vessel manufacturer for installation in a boat or vessel, the boat or vessel manufacturer may be the point of first retail sale if the boat or vessel manufacturer can determine if the engine is or is not exported once they have sold the boat or vessel. If the boat or vessel manufacturer cannot determine if the engine is or is not exported once they have sold the boat or vessel, the engine is presumed to not be exported, unless the engine manufacturer can demonstrate otherwise. Engine manufacturers must include engines in their average if the engine is exported and subsequently imported into the United States installed in a boat or vessel and introduced into United States commerce.

Trading means the exchange of marine engine emission credits between manufacturers.

§91.203 General provisions.

(a) The certification averaging, banking, and trading provisions for hydrocarbon plus oxides of nitrogen emissions from eligible marine SI engines are described in this subpart.

(b) A marine SI engine family must use the averaging provisions and may use the banking and trading provisions for hydrocarbon plus oxides of nitrogen emissions if it is subject to regulation under subpart B of this part with certain exceptions specified in paragraph (c) of this section.

(c) Manufacturers of marine SI engines may not use the banking and trading provisions for new marine SI engines:

(1) Which are exported, or

(2) Which are subject to state engine emission standards unless the manufacturer demonstrates to the Administrator that inclusion of these engines in banking and trading is appropriate.

(d) A manufacturer may certify marine SI engine families at Family Emission Limits (FELs) above or below the applicable emission standard, provided the summation of the manufacturer's projected balance of all credit transactions in a given model year is greater than or equal to zero, as determined under §91.207.

(1) A manufacturer of an engine family with an FEL exceeding the applicable emission standard must obtain positive emission credits sufficient to address the associated credit shortfall via averaging, banking, or trading.

(2) An engine family with an FEL below the applicable emission standard may generate positive emission credits for averaging, banking, or trading, or a combination thereof. Emission credits may not be used to offset an engine family's emissions that exceed its applicable FEL. Credits may not be used to remedy nonconformity determined by a production line testing, a Selective Enforcement Audit (SEA) or by recall (in-use) testing. However, in the case of a manufacturer production line testing or SEA failure, credits may be

used to allow subsequent production of engines for the family in question if the manufacturer elects to recertify to a higher FEL. In the case of production line testing a manufacturer may revise the FEL based upon production line testing results obtained under subpart F and upon Administrator approval pursuant to § 91.122(d).

(e) Credits generated in a given model year may be used in the following three model years. Credits not used by the end of the third model year after being generated are forfeited. Credits generated in one model year may not be used for prior model years, unless allowed under § 91.207.

(f) Manufacturers must demonstrate compliance under the averaging, banking, and trading provisions for a particular model year by 270 days after the model year. An engine family generating negative credits for which the manufacturer does not obtain or generate an adequate number of positive credits from the same or previous model years will violate the conditions of the certificate of conformity. The certificate of conformity may be voided *ab initio* pursuant to § 91.123 for this engine family.

§ 91.204 Averaging.

(a) Negative credits from engine families with FELs above the applicable emission standard must be offset by positive credits from engine families below the applicable emission standard, as allowed under the provisions of this subpart. Averaging of credits in this manner is used to determine compliance under § 91.207(b).

(b) For model years through 2000, outboard credits may not be summed with personal watercraft credits, or vice versa, for purposes of compliance under § 91.207, except manufacturers may, at their discretion, include personal watercraft credits with outboard credits upon demonstration to the satisfaction of the Administrator that the personal watercraft engine is installed in a hybrid vessel that is smaller than a typical sterndrive or inboard vessel and larger than a typical personal watercraft. For model year 2001 and later, manufacturers must sum credits generated from outboard and personal watercraft to determine compliance under § 91.207.

(c) Credits used in averaging may be obtained from credits generated by another engine family as allowed under § 91.204(b), in the same model year, credits banked in the three previous model years, or credits obtained through trading.

§ 91.205 Banking.

(a) A manufacturer of a marine SI engine family with an FEL below the applicable emission standard for a given model year may bank credits in that model year for use in averaging and trading in the following three model years. Negative credits must be banked according to the requirements under § 91.207(c). Positive credits not used within the three model years after they are banked are forfeited.

(1) Early banking. (i) For outboard engines in model year (MY) 1997, a manufacturer may bank positive emission credits if the following conditions are met: the manufacturer certifies their entire marine outboard engine product line for MY 1997 under the emission standards applicable to MY 1998, the manufacturer demonstrates compliance with the corporate average standard under § 91.207(b), and the sum of positive and negative credits under § 91.207 generates positive emission credits, when the following formula is used for purposes of the applicable standard in § 91.207(a). The number of credits that may be banked under this paragraph is the number of positive emission credits generated under the provisions of the preceding sentence. Marine engines certified under the provisions of this paragraph are subject to all of the requirements of this part.

HYDROCARBON PLUS OXIDES OF NITROGEN EXHAUST EMISSION STANDARDS

[Grams per kilowatt-hour]

Model year	P<4.3 kW $HC+NO_X$ Emission standard by model year	P>4.3 kW $HC+NO_X$ emission standard by model year
1997 ..	276	$(0.959 \times (151 + 557/P^{0.9})+1.22)$

(ii) For personal watercraft engines in model year 1998, a manufacturer may bank positive emission credits if the following conditions are met: The

manufacturer certifies their entire marine personal watercraft engine product line for MY 1998 under the emission standards applicable to 1998 model year outboard engine emission standards, the manufacturer demonstrates compliance with the corporate average standard under § 91.207(b), and the sum of positive and negative credits under § 91.207 generates positive emission credits, when the following formula is used for purposes of the applicable standard § 91.207(a). The number of credits that may be banked under this paragraph is the number of positive emission credits generated under the provisions of the preceding sentence. Marine engines certified under the provisions of this paragraph are subject to all of the requirements of this part.

HYDROCARBON PLUS OXIDES OF NITROGEN EXHAUST EMISSION STANDARDS

[Grams per kilowatt-hour]

Model year	P<4.3 kW $HC+NO_X$ emission standard by model year	P> 4.3 kW $HC+NO_X$ emission standard by model year
1998 ..	276	$(0.959 \times (151 + 557/P^{0.9})) + 1.22)$

(iii) For personal watercraft in model year 1997, a manufacturer may bank positive emission credits if the following conditions are met: the manufacturer certifies their entire marine personal watercraft engine product line for MY 1997 under the emission standards specified in the formula below for PWC, the manufacturer demonstrates compliance with the corporate average standard under § 91.207(b), and the sum of positive and negative credits under § 91.207 generates positive emission credits, when the following formula is used for purposes of the applicable standard in § 91.207(a). The number of credits that may be banked under this paragraph is the number of positive emission credits generated under the provisions of the preceding sentence. Marine engines certified under the provisions of this paragraph are subject to all of the requirements of this part.

HYDROCARBON PLUS OXIDES OF NITROGEN EXHAUST EMISSION STANDARDS

[Grams per kilowatt-hour]

Model year	P<4.3 kW $HC+NO_X$ emission standard by model year	P> 4.3 kW $HC+NO_X$ emission standard by model year
1997 ..	276	$(0.959 \times (151 + 557/P^{0.9})) + 1.22)$

(b) A manufacturer may bank actual credits only after the end of the model year and after EPA has reviewed the manufacturer's end-of-year reports. During the model year and before submittal of the end-of-year report, credits originally designated in the certification process for banking will be considered reserved and may be redesignated for trading or averaging in the end-of-year report and final report.

(c) Credits declared for banking from the previous model year that have not been reviewed by EPA may be used in averaging or trading transactions. However, such credits may be revoked at a later time following EPA review of the end-of-year report or any subsequent audit actions.

§ 91.206 Trading.

(a) A marine SI engine manufacturer may exchange emission credits with other marine SI engine manufacturers in trading. These credits must be used in the same averaging set as generated.

(b) Credits for trading can be obtained from credits banked in the three previous model years or credits generated during the model year of the trading transaction. Traded credits expire if they are not used in averaging within three model years following the model year in which they were generated.

(c) Traded credits can be used for averaging, banking, or further trading transactions.

(d) In the event of a negative credit balance resulting from a transaction, both the buyer and the seller are liable, except in cases involving fraud. Certificates of all engine families participating in a negative trade may be voided *ab initio* pursuant to § 91.123.

§ 91.207 Credit calculation and manufacturer compliance with emission standards.

(a) For each engine family, certification emission credits (positive or negative) are to be calculated according to the following equation and rounded, in accordance with ASTM E29–93a, to the nearest gram. ASTM E29–93a has been incorporated by reference. See § 91.6. Consistent units are to be used throughout the equation. The following equation is used to determine hydrocarbon plus oxides of nitrogen credit status for an engine family, whether generating positive credits or negative credits:

$$\sum_{t=1}^{\text{max actual life}} \frac{S(t) \times \text{sales} \times (\text{std} - \text{fel}) \times \text{Power} \times 0.207 \times \mu_{\text{use}}}{1.03^{t}}$$

Where:

sales = the number of eligible sales tracked to the point of first retail sale for the given engine family during the model year. Annual production projections are used to project credit availability for initial certification. Actual sales volume is used in determining actual credits for end of-year compliance determination.

t = time in model years

Power = the average power of an engine family in kW (sales weighted). The power of each configuration is the rated output in kilowatts as determined by SAE J1228. This procedure has been incorporated by reference. See § 91.6.

max actual life = maximum actual life specific to the power rating and the application; max actual life = $2\mu_{life}$

μ_{life} = average actual life in years, specific to the power rating and the application as given below.

Engine type	(μ_{life})
Outboard	$41.27 \times \left(\frac{\text{Power}}{0.746}\right)^{-0.204}$
Personal Watercraft	10

Power = as defined above.

μ_{use} = mean use in hours per year. For outboard engines,

μ_{use} = 34.8 hrs /yr. For personal watercraft, μ_{use} = 77.3 hrs/yr;

S(t)=cumulative fraction survived at time t;

$S(t)=e^{-(t \times 0.906/\mu life)4.0}$

STD=the current and applicable marine SI engine emission standard in grams per kilowatt hour as determined in § 91.104.

FEL=the family emission limit for the engine family in grams per kilowatt hour.

(b) Manufacturer compliance with the corporate average emission standard is determined on a corporate average basis at the end of each model year. A manufacturer is in compliance when the sum of positive and negative emission credits it holds is greater than or equal to zero, except as allowed under paragraph (c) of this section.

(c)(1) Outboard Engines

(i) For model year 1998, a manufacturer is in compliance when the sum of positive credits and negative emission credits it holds is greater than or equal to zero, including

(A) Credits generated in MY 1998 exceed 70% of the negative credits generated in MY 1998. The remaining negative credits (up to 30% of the total negative credits) must be banked.

(ii) For model year 1999, a manufacturer is in compliance when the positive credits generated in MY 1999 exceed the sum of 80% of the negative credits generated in MY 1999 and the negative credits banked in 1998. The remaining negative credits (up to 20% of the total negative credits) must be banked.

(iii) For model year 2000, a manufacturer is in compliance when the sum of positive and negative emission credits it holds is greater than or equal to zero, including

(A) The negative credits banked in MY 1998 and MY 1999 and

(B) Any adjustments to credits based on adjustments to FELs resulting from requirements in §91.118(h)(1)(i). Manufacturers do not have to recalculate compliance for model years 1998 and 1999.

(2) Personal watercraft engines. (i) For model year 1999, a manufacturer is in compliance when the positive credits generated in MY 1999 exceed 50% of the negative credits generated in MY 1999. The remaining negative credits (up to 50% of the total negative credits) must be banked.

(ii) For model year 2000, a manufacturer is in compliance when the sum of positive and negative emission credits it holds is greater than or equal to zero, including

(A) The negative credits banked in 1999 and

(B) Any adjustments to credits based on adjustments to FELs resulting from requirements in §91.118(h)(1)(i). Manufacturers do not have to recalculate compliance for model year 1999.

(d) When a manufacturer is not in compliance, the manufacturer will be in violation of these regulations and EPA may void *ab initio* the certificates of engine families for which the manufacturer has not obtained sufficient positive emission credits pursuant to §91.123.

§91.208 Certification.

(a) In the application for certification a manufacturer must:

(1) Submit a statement that the engines for which certification is requested will not, to the best of the manufacturer's belief, cause the manufacturer to be in noncompliance under §91.207(b) when all credits are calculated for all the manufacturer's engine families.

(2) Declare an FEL for each engine family for HC plus NO_X. The FEL must have the same number of significant digits as the emission standard.

(3) Indicate the projected number of credits generated/needed for this family; the projected applicable production/sales volume, by quarter; and the values required to calculate credits as given in §91.207.

(4) Submit calculations in accordance with §91.207 of projected emission credits (positive or negative) based on quarterly production projections for each family.

(5)(i) If the engine family is projected to have negative emission credits, state specifically the source (manufacturer/engine family or reserved) of the credits necessary to offset the credit deficit according to quarterly projected production.

(ii) If the engine family is projected to generate credits, state specifically (manufacturer/engine family or reserved) where the quarterly projected credits will be applied.

(b) All certificates issued are conditional upon manufacturer compliance with the provisions of this subpart both during and after the model year of production.

(c) Failure to comply with all provisions of this subpart will be considered to be a failure to satisfy the conditions upon which the certificate was issued, and the certificate may be deemed void *ab initio* pursuant to §91.123.

(d) The manufacturer bears the burden of establishing to the satisfaction of the Administrator that the conditions upon which the certificate was issued were satisfied or waived.

(e) Projected credits based on information supplied in the certification application may be used to obtain a certificate of conformity. However, any such credits may be revoked based on review of end-of-year reports, follow-up audits, and any other verification steps deemed appropriate by the Administrator.

§91.209 Maintenance of records.

(a) The manufacturer must establish, maintain, and retain the following adequately organized and indexed records for each engine produced:

(1) EPA engine family,

(2) Engine identification number,

(3) Engine model year and build date,

(4) Power rating,

(5) Purchaser and destination, and

(6) Assembly plant.

(b) The manufacturer must establish, maintain, and retain the following adequately organized and indexed records for each engine family:

(1) EPA engine family identification code,

(2) Family Emission Limit (FEL) or FELs where FEL changes have been implemented during the model year,

(3) Power rating for each configuration tested,

(4) Projected sales volume for the model year, and

(5) Actual sales volume for the model year for each FEL where FEL changes have been implemented during the model year.

(c) Any manufacturer producing an engine family participating in trading reserved credits must maintain the following records on a quarterly basis for each such engine family:

(1) The engine family,

(2) The actual quarterly and cumulative applicable production/sales volume,

(3) The values required to calculate credits as given in § 91.207,

(4) The resulting type and number of credits generated/required,

(5) How and where credit surpluses are dispersed, and

(6) How and through what means credit deficits are met.

(d) The manufacturer must retain all records required to be maintained under this section for a period of eight years from the due date for the end-of-model year report. Records may be retained as hard copy or reduced to microfilm, ADP diskettes, and so forth, depending on the manufacturer's record retention procedure; provided, that in every case all information contained in the hard copy is retained.

(e) Nothing in this section limits the Administrator's discretion in requiring the manufacturer to retain additional records or submit information not specifically required by this section.

(f) Pursuant to a request made by the Administrator, the manufacturer must submit to the Administrator the information that the manufacturer is required to retain.

(g) EPA may void *ab initio* a certificate of conformity for an engine family for which the manufacturer fails to retain the records required in this section or to provide such information to the Administrator upon request pursuant to § 91.123.

§ 91.210 End-of-year and final reports.

(a) End-of-year and final reports must indicate the engine family, the actual sales volume, the values required to calculate credits as given in § 91.207, and the number of credits generated/required. Manufacturers must also submit how and where credit surpluses were dispersed (or are to be banked) and/or how and through what means credit deficits were met. Copies of contracts related to credit trading must be included or supplied by the broker, if applicable. The report must include a calculation of credit balances to show that the credit summation is equal to or greater than zero.

(b) The sales volume for end-of-year and final reports must be based on the location of the point of first retail sale (for example, retail customer or dealer) also called the final product purchase location.

(c)(1) End-of-year reports must be submitted within 90 days of the end of the model year to: Manager, Engine Compliance Programs Group (6403–J), US Environmental Protection Agency, 401 M Street SW, Washington, DC 20460.

(2) Final reports must be submitted within 270 days of the end of the model year to: Manager, Engine Compliance Programs Group (6403–J), U.S. Environmental Protection Agency, 401 M Street SW, Washington, DC 20460.

(d) Failure by a manufacturer to submit any end-of-year or final reports in the specified time for all engines is a violation of § 91.1103(a)(2) and section 213(d) of the Clean Air Act for each engine.

(e) A manufacturer generating credits for banking only who fails to submit end-of-year reports in the applicable specified time period (90 days after the end of the model year) may not use the credits until such reports are received and reviewed by EPA. Use of projected credits pending EPA review is not permitted in these circumstances.

(f) Errors discovered by EPA or the manufacturer in the end-of-year report, including errors in credit calculation, may be corrected in the final report up to 270 days from the end of the model year.

(g) If EPA or the manufacturer determines that a reporting error occurred

on an end-of-year or final report previously submitted to EPA under this section, the manufacturer's credits and credit calculations must be recalculated. Erroneous positive credits will be void except as provided in paragraph (h) of this section. Erroneous negative credit balances may be adjusted by EPA.

(h) If within 270 days of the end of the model year, EPA review determines a reporting error in the manufacturer's favor (that is, resulting in an increased credit balance) or if the manufacturer discovers such an error within 270 days of the end of the model year, EPA shall restore the credits for use by the manufacturer.

§91.211 Notice of opportunity for hearing.

Any voiding of the certificate under §§91.203(f), 91.206(d), 91.207(d), 91.208(c), or §91.209(g) shall be made only after the manufacturer concerned is offered an opportunity for a hearing conducted in accordance with §§91.512, 91.513 and 91.514 and, if a manufacturer requests such a hearing, will be made only after an initial decision by the Presiding Officer.

Subpart D—Emission Test Equipment Provisions

§91.301 Scope; applicability.

(a) This subpart describes the equipment required in order to perform exhaust emission tests on new marine gasoline-fueled spark-ignition propulsion engines subject to the provisions of subpart A of this part 91.

(b) Exhaust gases are sampled while the test engine is operated using a steady state test cycle on an engine dynamometer. Exhaust gas sampling may be performed using either the raw gas sampling method or the constant volume sampling (CVS) method. The exhaust gases receive specific component analysis determining concentration of pollutant, exhaust volume, the fuel flow, and the power output during each mode. Emissions are reported on a gram per brake-kilowatt hour (g/kW-hr). See subpart E of this part for a complete description of the test procedure.

(c) Additional information about system design, calibration methodologies, and so forth, for raw gas sampling can be found in part 86, subpart D of this chapter. Examples for system design, calibration methodologies, and so forth, for dilute sampling can be found in part 86, subpart N of this chapter.

§91.302 Definitions.

The definitions in §91.3 apply to this subpart.

§91.303 Acronyms and abbreviations.

(a) The acronyms and abbreviations in §91.5 apply to this subpart.

(b) The symbols in Table 1 in appendix A of this subpart apply to this subpart.

§91.304 Test equipment overview.

(a) All engines subject to this subpart are tested for exhaust emissions. Engines are operated on dynamometers meeting the specification given in §91.305.

(b) The exhaust is tested for gaseous emissions using either a constant volume sampling (CVS) system as described in §91.414, or using the raw gas sampling system as described in §91.421. Both systems require analyzers (see paragraph (c) of this section) specific to the pollutant being measured.

(c) Analyzers used are a non-dispersive infrared detector (NDIR) absorption type for carbon monoxide and carbon dioxide analysis; paramagnetic detector (PMD), zirconia (ZRDO), or electrochemical type (ECS) for oxygen analysis; a flame ionization detector (FID) or heated flame ionization detector (HFID) type for hydrocarbon analysis; and a chemiluminescent detector (CLD) or heated chemiluminescent detector (HCLD) for oxides of nitrogen analysis.

§91.305 Dynamometer specifications and calibration accuracy.

(a) *Dynamometer specifications.* (1) The dynamometer test stand and other instruments for measurement of engine speed and torque must meet the accuracy requirements shown in Table 2 in appendix A to this subpart. The dynamometer must be capable of performing the test cycle described in §91.410.

(b) *Dynamometer calibration accuracy.* (1) The dynamometer test stand and other instruments for measurement of engine torque and speed must meet the calibration frequency shown in Table 2 in appendix to this subpart.

(2) A minimum of three calibration weights for each range used is required. The weights must be equally spaced and traceable to within 0.5 percent of National Institute of Standards and Testing (NIST) weights. Laboratories located in foreign countries may certify calibration weights to local government bureau standards.

§ 91.306 Dynamometer torque cell calibration.

(a)(1) Any lever arm used to convert a weight or a force through a distance into a torque must be used in a horizontal position for horizontal shaft dynamometers (± five degrees). For vertical shaft dynamometers, a pulley system may be used to convert the dynamometer's horizontal loading into the vertical plane.

(2) Calculate the indicated torque (IT) for each calibration weight to be used by:

IT=Moment Arm (meters) X Calibration Weight (Newtons)

(3) Attach each calibration weight specified in § 91.305(b)(2) to the moment arm at the calibration distance determined in paragraph (a)(2) of this section. Record the power measurement equipment response (N-m) to each weight.

(4) Compare the torque value measured to the calculated torque.

(5) The measured torque must be within two percent of the calculated torque.

(6) If the measured torque is not within two percent of the calculated torque, adjust or repair the system. Repeat steps in paragraphs (a)(1) through (a)(6) of this section with the adjusted or repaired system.

(b) Option. A master load-cell or transfer standard may be used to verify the torque measurement system.

(1) The master load-cell and read out system must be calibrated with weights specified in § 91.305(b)(2).

(2) Attach the master load-cell and loading system.

(3) Load the dynamometer to a minimum of three equally spaced torque values as indicated by the master load-cell for each in-use range used.

(4) The in-use torque measurement must be within two percent of the torque measured by the master system for each load used.

(5) If the in-use torque is not within two percent of the master torque, adjust or repair the system. Repeat steps in paragraphs (b)(2) through (b)(4) of this section with the adjusted or repaired system.

(c) Calibrated resistors may not be used for dynamometer torque transducer calibration, but may be used to span the transducer prior to engine testing.

(d) Other engine dynamometer system calibrations such as speed are performed as specified by the dynamometer manufacturer or as dictated by good engineering practice.

§ 91.307 Engine cooling system.

An engine cooling system is required with sufficient capacity to maintain the engine at normal operating temperatures as prescribed by the engine manufacturer. Auxiliary fan(s) may be used to maintain sufficient engine cooling during dynamometer operation.

§ 91.308 Lubricating oil and test fuel.

(a) *Lubricating oil.* (1) Use the engine lubricating oil which meets the marine engine manufacturer's requirements for a particular engine and intended usage. Record the specifications of the lubricating oil used for the test.

(2) For two-stroke engines, the fuel/oil mixture ratio must be that which is recommended by the manufacturer. If the flow rate of the oil in the engine is greater than two percent of the fuel flow rate, then the oil supplied to the engine must be added to the fuel flow in the emission calculations described in § 91.419 and § 91.426. Good engineering judgment may be used to estimate oil flow when oil injection is used.

(b) *Test fuels—certification.* The manufacturer must use gasoline having the specifications or substantially equivalent specifications approved by the Administrator, as specified in Table 3 in appendix A of this subpart for exhaust

emission testing of gasoline fueled engines. The specification range of the fuel to be used under this paragraph must be reported in accordance with §91.109(d).

(c) *Test fuels—service accumulation.* (1) Unleaded gasoline representative of commercial gasoline which will be generally available through retail outlets must be used in service accumulation for gasoline-fueled marine engines. As an alternative, the certification test fuels specified under paragraph (b) of this section for engine service accumulation. Leaded fuel may not be used during service accumulation.

(2) The octane rating of the gasoline used may not be higher than 4.0 research octane numbers above the minimum recommended by the manufacturer and have a minimum sensitivity of 7.5 octane numbers, where sensitivity is defined as research octane number minus motor octane number.

(d) Other fuels may be used for testing provided:

(1) They are commercially viable,

(2) Information, acceptable to the Administrator, is provided to show that only the designated fuel would be used in customer service,

(3) Use of a fuel listed under paragraph (b) of this section would have a detrimental effect on emissions or durability; and

(4) The Administrator provides written approval of the fuel specifications prior to the start of testing.

§91.309 Engine intake air temperature measurement.

(a) Engine intake air temperature measurement must be made within 100 cm of the air-intake of the engine. The measurement location must be either in the supply system or in the air stream entering the engine.

(b) The temperature measurements must be accurate to within ±2 °C.

§91.310 Engine intake air humidity measurement.

This section refers to engines which are supplied with intake air other than the ambient air in the test cell (i.e., air which has been pumbed directly to the engine air intake system). For engines which use ambient test cell air for the engine intake air, the ambient testcell humidity measurement may be used.

(a) *Humidity conditioned air supply.* Air that has had its absolute humidity altered is considered humidity-conditioned air. For this type of intake air supply, the humidity measurements must be made within the intake air supply system, and after the humidity conditioning has taken place.

(b) *Unconditioned air supply.* Humidity measurements in unconditioned intake air supply must be made in the intake air stream entering the engine. Alternatively, the humidity measurements can be measured within the intake air stream entering the supply system.

§91.311 Test conditions.

(a) *General requirements.* (1) Ambient temperature levels encountered by the test engine throughout the test sequence may not be less than 20 °C nor more than 30 °C.

(2) Calculate all volumes and volumetric flow rates at standard conditions for temperature and pressure. Use these conditions consistently throughout all calculations. Standard conditions for temperature and pressure are 25 °C and 101.3 kPa.

(b) *Engine test conditions.* Measure the absolute temperature (designated as T and expressed in Kelvin) of the engine air at the inlet to the engine and the dry atmospheric pressure (designated as p_s and expressed in kPa. Determine the parameter f according to the following provisions:

(1) Naturally aspirated and mechanically supercharged engines:

$$f = \frac{99}{p_s} \times \left(\frac{T}{298}\right)^{0.7}$$

(2) Turbocharged engine with or without cooling of inlet air:

$$f = \left(\frac{99}{p_s}\right)^{0.7} \times \left(\frac{T}{298}\right)^{1.5}$$

(3) For a test to be recognized as valid, the parameter f must be between the limits as shown below:

$$0.96 < f < 1.04$$

§ 91.312 Analytical gases.

(a) The shelf life of a calibration gas may not be exceeded. Record the expiration date stated by the gas supplier for each calibration gas.

(b) *Pure gases.* The required purity of the gases is defined by the contamination limits given in parenthesis. The following gases must be available for operation.

(1) Purified nitrogen, also referred to as ''zero-grade nitrogen'' (Contamination≤1 ppm C, ≤1 ppm CO, ≤400 ppm CO_2, ≤0.1 ppm NO)

(2) Purified oxygen (Purity 99.5 percent vol O_2)

(3) Hydrogen-helium mixture (40±2 percent hydrogen, balance helium) (Contamination≤1 ppm C, ≤400 ppm CO)

(4) Purified synthetic air, also referred to as ''zero gas'' (Contamination≤1 ppm C, ≤1 ppm CO, ≤400 ppm CO_2, ≤0.1 ppm NO) (Oxygen content between 18–21 percent vol.)

(c) *Calibration and span gases.* (1) Calibration gas values are to be derived from NIST ''Standard Reference Materials'' (SRM's) or other local gas standards and are to be single blends as specified in this subsection.

(2) Mixtures of gases having the following chemical compositions must be available:

C_3H_8 and purified synthetic air (dilute measurements); C_3H_8 and purified nitrogen (raw measurements);

CO and purified nitrogen;

NO_X and purified nitrogen (the amount of NO_2 contained in this calibration gas must not exceed five percent of the NO content);

CO_2 and purified nitrogen.

NOTE: For the HFID or FID, the manufacturer may choose to use as a diluent span gas and the calibration gas either purified synthetic air or purified nitrogen. Any mixture of C_3H_8 and purified synthetic air which contains a concentration of propane higher than what a gas supplier considers to be safe may be substituted with a mixture of C_3H_8 and purified nitrogen. However, the manufacturer must be consistent in the choice of diluent (zero air or purified nitrogen) between the calibration and span gases. If a manufacturer chooses to use C_3H_8 and purified nitrogen for the calibration gases, then purified nitrogen must be the diluent for the span gases.

(3) The true concentration of a span gas must be within ± 2 percent of the NIST gas standard. The true concentration of a calibration gas must be within ± 1 percent of the NIST gas standard. The use of precision blending devices (gas dividers) to obtain the required calibration gas concentrations is acceptable. Give all concentrations of calibration gas on a volume basis (volume percent or volume ppm).

(4) The gas concentrations used for calibration and span may also be obtained by means of a gas divider, diluting with purified N_2 or with purified synthetic air. The accuracy of the mixing device must be such that the concentration of the diluted gases may be determined to within ± 2 percent.

(d) Oxygen interference check gases must contain propane with 350 ppmC ± 75 ppmC hydrocarbon. Determine the concentration value to calibration gas tolerances by chromatographic analysis of total hydrocarbons plus impurities or by dynamic blending. Use nitrogen as the predominant diluent with the balance oxygen.

(e) Fuel for the hydrocarbon flame ionization detector (HC–FID) must be a blend of 40±2 percent hydrogen with the balance being helium. The mixture shall contain less than one ppm equivalent carbon response; 98 to 100 percent hydrogen fuel may be used with advance approval of the Administrator.

(f) *Hydrocarbon analyzer burner air.* The concentration of oxygen must be within one mole percent of the oxygen concentration of the burner air used in the latest oxygen interference check (percent O_2I), see § 91.316(d). If the difference in oxygen concentration is greater than one mole percent, then the oxygen interference must be checked and the analyzer adjusted if necessary, to meet the percent O_2I requirements. The burner air must contain less than two ppmC hydrocarbon.

§ 91.313 Analyzers required.

(a) *Analyzers.* Analyze measured gases with the following instruments:

(1) *Carbon monoxide* (*CO*) *analysis.* (i) The carbon monoxide analyzer must be of

the non-dispersive infrared (NDIR) absorption type.

(ii) The use of linearizing circuits is permitted.

(2) *Carbon dioxide* (CO_2) *analysis.* (i) The carbon dioxide analyzer must be of the non-dispersive infrared (NDIR) absorption type.

(ii) The use of linearizing circuits is permitted.

(3) *Oxygen* (O_2) *analysis.* Oxygen (O_2) analyzers may be of the paramagnetic (PMD), zirconia (ZRDO) or electrochemical type (ECS).

(4) *Hydrocarbon* (*HC*) *analysis.* (i) For Raw Gas Sampling, the hydrocarbon analyzer must be of the heated flame ionization (HFID) type. For constant volume sampling, the hydrocarbon analyzer may be of the flame ionization (FID) type or of the heated flame ionization (HFID) type.

(ii) For the HFID system, if the temperature of the exhaust gas at the sample probe is below 190 °C, the temperature of the valves, pipe work, and so forth, must be controlled so as to maintain a wall temperature of 190 ± 11 °C. If the temperature of the exhaust gas at the sample probe is above 190 °C, the temperature of the valves, pipe work, and so forth, must be controlled so as to maintain a wall temperature greater than 180 °C.

(iii) For the HFID analyzer, the detector, oven, and sample-handling components within the oven must be suitable for continuous operation at temperatures to 200° C. It must by capable of maintaining temperature within ± 5.5 °C of the set point.

(iv) Fuel and burner air must conform to the specifications in § 91.312.

(v) The percent of oxygen interference must be less than three percent, as specified in § 91.316(d).

(5) *Oxides of nitrogen* (NO_X) analysis. (i) This analysis device consists of the following items:

(A) A NO_2 to NO converter. The NO_2 to NO converter efficiency must be at least 90 percent.

(B) An ice bath located after the NO_X converter (optional).

(C) A chemiluminescent detector (CLD) or heated chemiluminescent detector (HCLD).

(ii) The quench interference must be less than three percent as measured in § 91.325.

(b) Other gas analyzers yielding equivalent results may be used with advance approval of the Administrator.

(c) The following requirements must be incorporated as indicated in systems used for testing under this subpart.

(1) Carbon monoxide and carbon dioxide measurements must be made on a dry basis (for raw exhaust measurement only). Specific requirements for the means of drying the sample can be found in § 91.313(e).

(2) Calibration or span gases for the NO_X measurement system must pass through the NO_2 to NO converter.

(d) The electromagnetic compatibility (EMC) of the equipment must be on a level as to minimize additional errors.

(e) Gas drying. Chemical dryers are not an acceptable method of removing water from the sample. Water removal by condensation is acceptable. If water is removed by condensation, the sample gas temperature or sample dew point must be monitored either within the water trap or downstream and its temperature must not exceed 7 °C. A water trap performing this function is an acceptable method. Means other than condensation may be used only with prior approval from the Administrator.

§ 91.314 Analyzer accuracy and specifications.

(a) *Measurement accuracy—general.* The analyzers must have a measuring range which allows them to measure the concentrations of the exhaust gas sample pollutants with the accuracies shown in Table 2 in appendix A to this subpart.

(1) *Precision.* The precision of the analyzer must be, at worst, ± 1 percent of full-scale concentration for each range used. The precision is defined as 2.5 times the standard deviation(s) of 10 repetitive responses to a given calibration or span gas.

(2) *Noise.* The analyzer peak-to-peak response to zero and calibration or span gases over any 10-second period may not exceed two percent of full-scale chart deflection on all ranges used.

(3) *Zero drift.* The analyzer zero-response drift during a one-hour period must be less than two percent of full-scale chart deflection on the lowest range used. The zero-response is defined as the mean response including

noise to a zero-gas during a 30-second time interval.

(4) *Span drift.* The analyzer span drift during a one-hour period must be less than two percent of full-scale chart deflection on the lowest range used. The analyzer span is defined as the difference between the span-response and the zero-response. The span-response is defined as the mean response including noise to a span gas during a 30-second time interval.

(b) *Operating procedure for analyzers and sampling system.* Follow the start-up and operating instructions of the instrument manufacturer. Adhere to the minimum requirements given in § 91.316 to § 91.325 and § 91.409.

(c) *Emission measurement accuracy—bag sampling.* (1) Good engineering practice dictates that exhaust emission sample analyzer readings below 15 percent of full scale chart deflection should generally not be used.

(2) Some high resolution read-out systems, such as computers, data loggers, and so forth, can provide sufficient accuracy and resolution below 15 percent of full scale. Such systems may be used provided that additional calibrations are made to ensure the accuracy of the calibration curves. The following procedure for calibration below 15 percent of full scale may be used:

NOTE: If a gas divider is used, the gas divider must conform to the accuracy requirements as follows: The use of precision blending devices (gas dividers) to obtain the required calibration gas concentrations is acceptable, provided that the blended gases are accurate to within ± 1.5 percent of NIST gas standards or other gas standards which have been approved by the Administrator. This accuracy implies that primary gases used for blending must be ''named'' to an accuracy of at least ± 1 percent, traceable to NIST or other approved gas standards.

(i) Span the full analyzer range using a top range calibration gas. The span gases must be accurate to within ± 2 percent of NIST gas standards or other gas standards which have been approved by the Administrator.

(ii) Generate a calibration curve according to, and meeting the requirements of the sections describing analyzer calibrations which are found in §§ 91.316, 91.317, 91.318, and 91.320 of this chapter.

(iii) Select a calibration gas (a span gas may be used for calibrating the CO_2 analyzer) with a concentration between the two lowest non-zero gas divider increments. This gas must be ''named'' to an accuracy of ± 2 percent of NIST gas standards, or other standards approved by the Administrator.

(iv) Using the calibration curve fitted to the points generated in paragraphs (c)(2) (i) and (ii) of this section, check the concentration of the gas selected in paragraph (c)(2)(iii) of this section. The concentration derived from the curve must be within ± 2.3 percent (± 2.8 percent for CO_2 span gas) of the gas' original named concentration.

(v) Provided the requirements of paragraph (c)(2)(iv) of this section are met, use the gas divider with the gas selected in paragraph (c)(2)(iii) of this section and determine the remainder of the calibration points. Fit a calibration curve per §§ 91.316, 91.317, 91.318, and 91.320 of this chapter for the entire analyzer range.

(d) *Emission measurement accuracy—continuous sampling.* Analyzers used for continuous analysis must be operated such that the measured concentration falls between 15 and 100 percent of full scale chart deflection. Exceptions to these limits are:

(1) The analyzer's response may be less than 15 percent or more than 100 percent of full scale if automatic range change circuitry is used and the limits for range changes are between 15 and 100 percent of full scale chart deflection;

(2) The analyzer's response may be less than 15 percent of full scale if:

(i) Alternative in paragraph (c)(2) of this section is used to ensure that the accuracy of the calibration curve is maintained below 15 percent; or

(ii) The full scale value of the range is 155 ppmC or less; or

(iii) The emissions from the engine are erratic and the integrated chart deflection value for the cycle is greater than 15 percent of full scale; or

(iv) The contribution of all data read below the 15 percent level is less than 10 percent by mass of the final test results.

§91.315 Analyzer initial calibration.

(a) *Warming-up time.* Follow the warm-up time according to the recommendations of the manufacturer. If not specified, a minimum of two hours should be allowed for warming up the analyzers.

(b) *NDIR and HFID analyzer.* Tune and maintain the NDIR analyzer per the instrument manufacturer recommendations. The combustion flame of the HFID analyzer must be optimized in order to meet the specifications in §91.316(b).

(c) *Zero setting and calibration.* Using purified synthetic air (or nitrogen), set the CO, CO_2, NO_X and HC analyzers at zero. Connect the appropriate calibrating gases to the analyzers and record the values. The same gas flow rates shall be used as when sampling exhaust.

(d) *Rechecking of zero setting.* Recheck the zero setting and, if necessary, repeat the procedure described in paragraph (c) of this section.

§91.316 Hydrocarbon analyzer calibration.

(a) Calibrate the FID and HFID hydrocarbon analyzer as described in this section. Operate the HFID to a set point ± 5.5 °C between 185 and 197 °C.

(b) Initial and periodic optimization of detector response. Prior to introduction into service and at least annually thereafter, adjust the FID and HFID hydrocarbon analyzer for optimum hydrocarbon response as specified by this paragraph. Alternative methods yielding equivalent results may be used, if approved in advance by the Administrator.

(1) Follow good engineering practices for initial instrument start-up and basic operating adjustment using the appropriate fuel (see §91.312) and purified synthetic air or zero-grade nitrogen.

(2) One of the following procedures is required for FID or HFID optimization:

(i) The procedure outlined in Society of Automotive Engineers (SAE) paper No. 770141, ''Optimization of Flame Ionization Detector for Determination of Hydrocarbons in Diluted Automobile Exhaust''; author, Glenn D. Reschke. This procedure has been incorporated by reference. See §91.6.

(ii) The HFID optimization procedures outlined in §86.331–79 of this chapter.

(iii) Alternative procedures may be used if approved in advance by the Administrator.

(3) After the optimum flow rates have been determined, they are recorded for future reference.

(c) Initial and periodic calibration. Prior to introduction into service and monthly thereafter, or within one month prior to the certification test, calibrate the FID or HFID hydrocarbon analyzer on all normally used instrument ranges, using the steps in this paragraph. Use the same flow rate and pressures as when analyzing samples. Introduce calibration gases directly at the analyzer. An optional method for dilute sampling described in §86.1310(b)(3)(i) of this chapter may be used.

(1) Adjust analyzer to optimize performance.

(2) Zero the hydrocarbon analyzer with purified synthetic air or zero-grade nitrogen.

(3) Calibrate on each used operating range with calibration gases having nominal concentrations between 10 and 90 percent of that range. A minimum of six evenly spaced points covering at least 80 percent of the 10 to 90 percent range (64 percent) is required (see following table).

Example calibration points (percent)	Acceptable for calibration?
20, 30, 40, 50, 60, 70	No, range covered is 50? percent, not 64 percent.
20, 30, 40, 50, 60, 70, 80, 90	Yes.
10, 25, 40, 55, 70, 85	Yes
10, 30, 50, 70, 90	No, though equally spaced and entire range covered, a minimum of six points is needed

(4) For each range calibrated, if the deviation from a least-squares best-fit straight line is two percent or less of the value at each data point, calculate

concentration values by use of a single calibration factor for that range. If the deviation exceeds two percent at any point, use the best-fit non-linear equation which represents the data to within two percent of each test point to determine concentration.

(d) Oxygen interference optimization. Choose a range where the oxygen interference check gases will fall in the upper 50 percent. Conduct the test, as outlined in this paragraph, with the oven temperature set as required by the instrument manufacturer. Oxygen interference check gas specifications are found in § 91.312(d).

(1) Zero the analyzer.

(2) Span the analyzer with the 21 percent oxygen blend.

(3) Recheck zero response. If it has changed more than 0.5 percent of full scale repeat paragraphs (d)(1) and (d)(2) of this section to correct the problem.

(4) Introduce the 5 percent and 10 percent oxygen interference check gases.

(5) Recheck the zero response. If it has changed more than ± 1 percent of full scale, repeat the test.

(6) Calculate the percent of oxygen interference (designated as percent O_2I) for each mixture in paragraph (d)(4) of this section according to the following equation:

$$\text{percent } O_2I = \frac{\text{B Analyzer response (ppmC)}}{\text{B}} \times (100)$$

$$\text{analyzer response} = \left(\frac{\text{A}}{\text{\% of fullscale analyzer response due to A}} \times (\text{\% of fullscale analyzer response due to B}) \right)$$

Where:

A=hydrocarbon concentration (ppmC) of the span gas used in paragraph (d)(2) of this section.

B=hydrocarbon concentration (ppmC) of the oxygen interference check gases used in paragraph (d)(4) of this section.

(7) The percent of oxygen interference (designated as percent O_2I) must be less than ± three percent for all required oxygen interference check gases prior to testing.

(8) If the oxygen interference is greater than the specifications, incrementally adjust the air flow above and below the manufacturer's specifications, repeating paragraphs (d)(1) through (d)(7) of this section for each flow.

(9) If the oxygen interference is greater than the specification after adjusting the air flow, vary the fuel flow and thereafter the sample flow, repeating paragraphs (d)(1) through (d)(7) of this section for each new setting.

(10) If the oxygen interference is still greater than the specifications, repair or replace the analyzer, FID fuel, or burner air prior to testing. Repeat this section with the repaired or replaced equipment or gases.

§ 91.317 Carbon monoxide analyzer calibration.

(a) Calibrate the NDIR carbon monoxide analyzer described in this section.

(b) Initial and periodic interference check. Prior to its introduction into service and annually thereafter, check the NDIR carbon monoxide analyzer for response to water vapor and CO_2:

(1) Follow good engineering practices for instrument start-up and operation. Adjust the analyzer to optimize performance on the most sensitive range to be used.

(2) Zero the carbon monoxide analyzer with either purified synthetic air or zero-grade nitrogen.

(3) Bubble a mixture of three percent CO_2 in N_2 through water at room temperature and record analyzer response.

(4) An analyzer response of more than one percent of full scale for ranges above 300 ppm full scale or more than three ppm on ranges below 300 ppm full scale requires corrective action. (Use of conditioning columns is one form of corrective action which may be taken.)

(c) Initial and periodic calibration. Calibrate the NDIR carbon monoxide analyzer prior to its introduction into service and monthly thereafter.

(1) Adjust the analyzer to optimize performance.

(2) Zero the carbon monoxide analyzer with either purified synthetic air or zero-grade nitrogen.

(3) Calibrate on each used operating range with carbon monoxide-in-N_2 calibration gases having nominal concentrations between 10 and 90 percent of that range. A minimum of six evenly spaced points covering at least 80 percent of the 10 to 90 range (64 percent) is required (see following table).

Example calibration points (percent)	Acceptable for calibration?
20, 30, 40, 50, 60, 70	No, range covered is 50 percent, not 64 percent.
20, 30, 40, 50, 60, 70, 80, 90	Yes.
10, 25, 40, 55, 70, 85	Yes.
10, 30, 50, 70, 90	No, though equally spaced and entire range covered, a minimum of six points is needed.

(4) Additional calibration points may be generated. For each range calibrated, if the deviation from a least-squares best-fit straight line is two percent or less of the value at each data point, concentration values may be calculated by use of a single calibration factor for that range. If the deviation exceeds two percent at any point, use the best-fit non-linear equation which represents the data to within two percent of each test point to determine concentration.

§91.318 Oxides of nitrogen analyzer calibration.

(a) Calibrate the chemiluminescent oxides of nitrogen analyzer as described in this section.

(b) Initial and periodic interference. Prior to its introduction into service, and monthly thereafter, check the chemiluminescent oxides of nitrogen analyzer for NO_2 to NO converter efficiency. Figure 2 in appendix B of this subpart is a reference for the following paragraphs:

(1) Follow good engineering practices for instrument start-up and operation. Adjust the analyzer to optimize performance.

(2) Zero the oxides of nitrogen analyzer with purified synthetic air or zero-grade nitrogen.

(3) Connect the outlet of the NO_X generator to the sample inlet of the oxides of nitrogen analyzer which has been set to the most common operating range.

(4) Introduce into the NO_X generator analyzer-system an NO-in-nitrogen (N_2) mixture with an NO concentration equal to approximately 80 percent of the most common operating range. The NO_2 content of the gas mixture must be less than 5 percent of the NO concentration.

(5) With the oxides of nitrogen analyzer in the NO mode, record the concentration of NO indicated by the analyzer.

(6) Turn on the NO_X generator O_2 (or air) supply and adjust the O_2 (or air) flow rate so that the NO indicated by the analyzer is about 10 percent less than indicated in paragraph (b)(5) of this section. Record the concentration of NO in this NO+O_2 mixture as value ''c.''

(7) Switch the NO_X generator to the generation mode and adjust the generation rate so that the NO measured on the analyzer is 20 percent of that measured in paragraph (b)(5) of this section. There must be at least 10 percent unreacted NO at this point. Record the concentration of residual NO as value ''d.''

(8) Switch the oxides of nitrogen analyzer to the NO_X mode and measure total NO_X. Record this value as ''a.''

(9) Switch off the NO_X generator but maintain gas flow through the system.

The oxides of nitrogen analyzer will indicate the NO_X in the $NO+O_2$ mixture. Record this value as ''b.''

(10) Turn off the NO_X generator O_2 (or air) supply. The analyzer will now indicate the NO_X in the original NO-in-N_2 mixture. This value should be no more than 5 percent above the value indicated in paragraph (b)(4) of this section.

(11) Calculate the efficiency of the NO_X converter by substituting the concentrations obtained into the following equation:

$$\text{percent efficiency} = \left(1 + \frac{ab}{cd}\right) \times 100$$

Where:

a=concentration obtained in paragraph (b)(8) of this section,

b=concentration obtained in paragraph (b)(9) of this section,

c=concentration obtained in paragraph (b)(6) of this section,

d=concentration obtained in paragraph (b)(7) of this section.

If converter efficiency is not greater than 90 percent, corrective action is required.

(c) Initial and periodic calibration. Prior to its introduction into service, and monthly thereafter, calibrate the chemiluminescent oxides of nitrogen analyzer on all normally used instrument ranges. Use the same flow rate as when analyzing samples. Proceed as follows:

(1) Adjust analyzer to optimize performance.

(2) Zero the oxides of nitrogen analyzer with zero-grade air or zero-grade nitrogen.

(3) Calibrate on each normally used operating range with NO-in-N_2 calibration gases with nominal concentrations between 10 and 90 percent of that range. A minimum of six evenly spaced points covering at least 80 percent of the 10 to 90 percent range (64 percent) is required (see following table).

Example calibration points (percent)	Acceptable for calibration?
20, 30, 40, 50, 60, 70	No, range covered is 50 percent, not 64 percent.
20, 30, 40, 50, 60, 70, 80, 90	Yes.
10, 25, 40, 55, 70, 85	Yes.
10, 30, 50, 70, 90	No, though equally spaced and entire range covered, a minimum of six points is needed.

(4) Additional calibration points may be generated. For each range calibrated, if the deviation from a least-squares best-fit straight line is two percent or less of the value at each data point, concentration values may be calculated by use of a single calibration factor for that range. If the deviation exceeds two percent at any point, use the best-fit non-linear equation which represents the data to within two percent of each test point to determine concentration.

(d) The initial and periodic interference, system check, and calibration test procedures specified in §86.332–79 of this chapter may be used in lieu of the procedures specified in this section.

§ 91.319 NO_X converter check.

(a) The efficiency of the converter used for the conversion of NO_2 to NO is tested as given in paragraphs (a)(1) through (a)(8) of this section (see Figure 2 in appendix B to this subpart).

(1) Using the test setup as shown in Figure 2 in appendix B to this subpart (see also §91.318 of this chapter) and the procedures described in paragraphs (a)(2) through (a)(8) of this section, test the efficiency of converters by means of an ozonator.

(2) Calibrate the HCLD in the most common operating range following the manufacturer's specifications using zero and span gas (the NO content of which must amount to about 80 percent of the operating range and the NO_2 concentration of the gas mixture less than 5 percent of the NO concentration). The NO_X analyzer must be in the NO mode so that the span gas does not pass through the converter. Record the indicated concentration.

(3) Calculate the efficiency of the NO_X converter as described in §91.318(b).

(4) Via a T-fitting, add oxygen continuously to the gas flow until the concentration indicated is about 20 percent less than the indicated calibration concentration given in paragraph (a)(2) of this section. Record the indicated concentration as ''c''. The ozonator is kept deactivated throughout the process.

(5) Activate the ozonator to generate enough ozone to bring the NO concentration down to about 20 percent (minimum 10 percent) of the calibration concentration given in paragraph (a)(2) of this section. Record the indicated concentration as ''d''.

NOTE: If, with the analyzer in the most common range the NO_X converter cannot give a reduction from 80 percent to 20 percent, then use the highest range which will give the reduction.

(6) Switch the NO analyzer to the NO_X mode, which means that the gas mixture (consisting of NO, NO_2, O_2 and N_2) now passes through the converter. Record the indicated concentration as ''a''.

(7) Deactivate the ozonator. The mixture of gases described in paragraph (a)(6) of this section passes through the converter into the detector. Record the indicated concentration as ''b''.

(8) Switched to NO mode with the ozonator deactivated, the flow of oxygen or synthetic air is also shut off. The NO_X reading of the analyzer may not deviate by more than ± 5 percent of the theoretical value of the figure given in paragraph (a)(2) of this section.

(b) The efficiency of the converter must be tested prior to each calibration of the NO_X analyzer.

(c) The efficiency of the converter may not be less than 90 percent.

§91.320 Carbon dioxide analyzer calibration.

(a) Prior to its introduction into service, and monthly thereafter, or within one month prior to the certification test, calibrate the NDIR carbon dioxide analyzer as follows:

(1) Follow good engineering practices for instrument start-up and operation. Adjust the analyzer to optimize performance.

(2) Zero the carbon dioxide analyzer with either purified synthetic air or zero-grade nitrogen.

(3) Calibrate on each normally used operating range with carbon dioxide-in-N_2 calibration or span gases having nominal concentrations between 10 and 90 percent of that range. A minimum of six evenly spaced points covering at least 80 percent of the 10 to 90 percent range (64 percent) is required (see following table).

Example calibration points (percent)	Acceptable for calibration?
20, 30, 40, 50, 60, 70	No, range covered is 50 percent, not 64 percent.
20, 30, 40, 50, 60, 70, 80, 90	Yes.
10, 25, 40, 55, 70, 85	Yes.
10, 30, 50, 70, 90	No, though equally spaced and entire range covered, a minimum of six points is needed.

(4) Additional calibration points may be generated. For each range calibrated, if the deviation from a least-squares best-fit straight line is 2 percent or less of the value at each data point, concentration values may be calculated by use of a single calibration factor for that range. If the deviation exceeds 2 percent at any point, use the best-fit non-linear equation which represents the data to within 2 percent of each test point to determine concentration.

(b) The initial and periodic interference, system check, and calibration test procedures specified in §§86.316, 86.319, 86.320, 86.321, and 86.322 of this chapter may be used in lieu of the procedures in this section.

§91.321 NDIR analyzer calibration.

(a) *Detector optimization*. If necessary, follow the manufacturer's instructions for initial start-up and basic operating adjustments.

(b) *Calibration curve.* Develop a calibration curve for each range used as follows:

(1) Zero the analyzer.

(2) Span the analyzer to give a response of approximately 90 percent of full-scale chart deflection.

(3) Recheck the zero response. If it has changed more than 0.5 percent of full scale, repeat the steps given in paragraphs (b)(1) and (b)(2) of this section.

(4) Record the response of calibration gases having nominal concentrations between 10 and 90 percent of full-scale concentration. A minimum of six evenly spaced points covering at least 80 percent of the 10 to 90 percent range (64 percent) is required (see following table).

Example calibration points (percent)	Acceptable for calibration?
20, 30, 40, 50, 60, 70	No, range covered is 50 percent, not 64 percent.
20, 30, 40, 50, 60, 70, 80, 90	Yes.
10, 25, 40, 55, 70, 85	Yes.
10, 30, 50, 70, 90	No, though equally spaced and entire range covered, a minimum of six points is needed.

(5) Generate a calibration curve. The calibration curve must be of fourth order or less, have five or fewer coefficients, and be of the form of equation (1) or (2). Include zero as a data point. Compensation for known impurities in the zero gas can be made to the zero-data point. The calibration curve must fit the data points within 2 percent of point or one percent of full scale, whichever is less.

$$y = Ax^4 + Bx^3 + Cx^2 + Dx + E \qquad (1)$$

$$y = \frac{x}{Ax^4 + Bx^3 + Cx^2 + Dx + E} \qquad (2)$$

y=concentration
x=chart deflection

(6) Option. A new calibration curve need not be generated if:

(i) A calibration curve conforming to paragraph (b)(5) of this section exists;

(ii) The responses generated in paragraph (b)(4) of this section are within one percent of full scale or two percent of point, whichever is less, of the responses predicted by the calibration curve for the gases used in paragraph (b)(4) of this section.

(7) If multiple range analyzers are used, the lowest range used must meet the curve fit requirements below 15 percent of full scale.

(c) *Linear calibration criteria.* If any range is within 2 percent of being linear, a linear calibration may be used. To determine if this criterion is met:

(1) Perform a linear least-square regression on the data generated. Use an equation of the form y=mx, where x is the actual chart deflection and y is the concentration.

(2) Use the equation z=y/m to find the linear chart deflection (designated as z) for each calibration gas concentration (designated as y).

(3) Determine the linearity (designated as percent L) for each calibration gas by:

$$\text{percent L} = \frac{(zx)}{\text{Fullscale linear chart deflection}}(100)$$

(4) The linearity criterion is met if the percent L is less than ± 2 percent for each data point generated. For each emission test, use a calibration curve of the form Y=mx. The slope (designated as m) is defined for each range by the spanning process.

§ 91.322 Calibration of other equipment.

Calibrate other test equipment as often as required by the manufacturer or as necessary according to good engineering practice.

§91.323 Analyzer bench checks.

(a) Prior to initial use and after major repairs, verify that each analyzer complies with the specifications given in Table 2 in appendix A to this subpart.

(b) If a stainless steel NO_2 to NO converter is used, condition all new or replacement converters. The conditioning consists of either purging the converter with air for a minimum of four hours or until the converter efficiency is greater than 90 percent. The converter must be at operational temperature while purging. Do not use this procedure prior to checking converter efficiency on in-use converters.

§91.324 Analyzer leakage check.

(a) *Vacuum side leak check.* (1) Check any location within the analysis system where a vacuum leak could affect the test results.

(2) The maximum allowable leakage rate on the vacuum side is 0.5 percent of the in-use flow rate for the portion of the system being checked. The analyzer flows and bypass flows may be used to estimate the in-use flow rates.

(3) The sample probe and the connection between the sample probe and valve V2 (see Figure 1 in appendix B of this subpart) may be excluded from the leak check.

(b) *Pressure side leak check.* Substantial leaks of the sample on the pressure side of the system may impact sample integrity if the leaks are of sufficient magnitude. As a safety precaution, it is good engineering practice to perform periodic pressure side leak checks on the sampling system.

§91.325 Analyzer interference checks.

(a) Gases present in the exhaust other than the one being analyzed can interfere with the reading in several ways. Positive interference occurs in NDIR and PMD instruments when the interfering gas gives the same effect as the gas being measured, but to a lesser degree. Negative interference occurs in NDIR instruments by the interfering gas broadening the absorption band of the measured gas, and in CLD instruments by the interfering gas quenching the radiation. The interference checks described in this section are to be made initially and after any major repairs that could affect analyzer performance.

(b) CO analyzer water and CO_2 interference checks. Bubble through water at room temperature a CO_2 span gas having a concentration of between 80 percent and 100 percent inclusive of full scale of the maximum operating range used during testing and record the analyzer response. For dry measurements, this mixture may be introduced into the sample system prior to the water trap. The analyzer response must not be more than one percent of full scale for ranges equal to or above 300 ppm or more than three ppm for ranges below 300 ppm.

(c) NO_X analyzer quench check. The two gases of concern for CLD (and HCLD) analyzers are CO_2 and water vapor. Quench responses to these two gases are proportional to their concentrations and, therefore, require test techniques to determine quench at the highest expected concentrations experienced during testing.

(1) NO_X analyzer CO_2 quench check. (i) Pass a CO_2 span gas having a concentration of 80 percent to 100 percent of full scale of the maximum operating range used during testing through the CO_2 NDIR analyzer and record the value as ''a.''

(ii) Dilute the CO_2 span gas approximately 50 percent with NO span gas and pass through the CO_2 NDIR and CLD (or HCLD). Record the CO_2 and NO values as ''b'' and ''c'', respectively.

(iii) Shut off the CO_2 and pass only the NO span gas through the CLD (or HCLD). Record the NO value recorded as ''d.''

(iv) Calculate the percent CO_2 quench as follows, which may not exceed three percent:

$$\text{percent } CO_2 \text{ quench} = 100 \times \left(1 \frac{(c \times a)}{(d \times a)(d \times b)}\right) \times (a / b)$$

Where:

a=Undiluted CO_2 concentration (percent)

b=Diluted CO_2 concentration (percent)

c=Diluted NO concentration (ppm)

d=Undiluted NO concentration (ppm)

(2) NO_X analyzer water quench check. (i) This check applies to wet measurements only. Pass an NO span gas having a concentration of 80 percent to 100 percent of full scale of a normal operating range through the CLD (or HCLD). Record the response as ''D.'' Bubble through water at room temperature the NO span gas and pass it through the CLD (or HCLD). Record the analyzers response as ''AR.'' Determine and record the analyzers absolute operating pressure and the bubbler water temperature. (It is important that the NO span gas contains minimal NO_2 concentration for this check. No allowance for absorption of NO_2 in water has been made in the following quench calculations.)

(ii) Calculations for water quench must consider dilution of the NO span gas with water vapor and scaling of the water vapor concentration of the mixture to that expected during testing. Determine the mixture's saturated vapor pressure (designated as ''Pwb'') that corresponds to the bubbler water temperature. Calculate the water concentration (''Z1'', percent) in the mixture by the following equation:

$$Z1=100\times(Pwb/GP)$$

Where:

GP=the analyzer's standard operating pressure (pascals)

(iii) Calculate the expected dilute NO span gas and water vapor mixture concentration (designated as ''D1'') by the following equation:

$$D1=D\times(1Z1/100)$$

§ 91.326 Pre- and post-test analyzer calibration.

Calibrate the operating range of each analyzer used during the test prior to and after each test in accordance with the following procedure (A chronic need for parameter adjustment can indicate a need for instrument maintenance.):

(a) Make the calibration using a zero gas and a span gas whose nominal value is between 80 percent and 100 percent of full scale, inclusive, of the measuring range.

(b) Use the same analyzer(s) flow rate and pressure as that used during exhaust emission test sampling.

(c) Warm-up and stabilize the analyzer(s) before the calibration is made.

(d) If necessary, clean and/or replace filter elements before calibration is made.

(e) Calibrate analyzer(s) as follows:

(1) Zero the analyzer using the appropriate zero gas. Adjust analyzer zero if necessary. Zero reading should be stable.

(2) Span the analyzer using the appropriate span gas for the range being calibrated. Adjust the analyzer to the calibration set point if necessary.

(3) Recheck zero and span set points.

(4) If the response of the zero gas or span gas differs more than one percent of full scale, then repeat paragraphs (e)(1) through (3) of this section.

§ 91.327 Sampling system requirements.

(a) *Sample component surface temperature.* For sampling systems which use heated components, use engineering judgment to locate the coolest portion of each component (pump, sample line section, filters, and so forth) in the heated portion of the sampling system that has a separate source of power or heating element. Monitor the temperature at that location. If several components are within an oven, then only the surface temperature of the component with the largest thermal mass and the oven temperature need be measured.

(b) If water is removed by condensation, monitor the sample gas temperature or sample dew point either within the water trap or downstream. It may not exceed 7 °C.

§ 91.328 Measurement equipment accuracy/calibration frequency table.

(a) The accuracy of measurements must be such that the maximum tolerances shown in Table 2 in appendix A to this subpart are not exceeded.

(b) Calibrate all equipment and analyzers according to the frequencies shown in Table 2 in appendix A to this subpart.

(c) Prior to initial use and after major repairs, bench check each analyzer (see §91.323).

(d) Calibrate as specified in §91.306 and §§91.315 through 91.322.

(e) At least monthly, or after any maintenance which could alter calibration, perform the following calibrations and checks.

(1) Leak check the vacuum side of the system (see §91.324(a)).

(2) Verify that the automatic data collection system (if used) meets the requirements found in Table 2 in appendix A to this subpart.

(3) Check the fuel flow measurement instrument to insure that the specifications in Table 2 in appendix A to this subpart are met.

(f) Verify that all NDIR analyzers meet the water rejection ratio and the CO_2 rejection ratio as specified in §91.325.

(g) Verify that the dynamometer test stand and power output instrumentation meet the specifications in Table 2 in appendix A to this subpart.

§91.329 Catalyst thermal stress test.

(a) *Oven characteristics.* The oven used for termally stressing the test catalyst must be capable of maintaining a temperature of 500 ± 5 °C and 1000 ± 10 °C.

(b) *Evaluation gas composition.* (1) A synthetic exhaust gas mixture is used for evaluating the effect of thermal stress on catalyst conversion efficiency.

(2) The synthetic exhaust gas mixture must have the following composition:

Constituent	Volume percent	Parts per million
Carbon Monoxide [1]	1	
Oxygen	1.3	
Carbon Dioxide	9	
Water Vapor	10	
Sulfur Dioxide		20
Oxides of Nitrogen		280
Hydrogen		3500
Hydrocarbon [1, 2]		4000
Nitrogen=Balance		

[1] Alternatively, the carbon monoxide and hydrocarbon proportions of the mixture may be changed to 1.2% and 4650 ppm, respectively (using on of these alternative concentrations requires that the other be used simultaneously).

[2] Propylene/propane ratio=2/1.

[61 FR 52102, Oct. 4, 1996; 62 FR 20066, Apr. 24, 1997]

APPENDIX A TO SUBPART D OF PART 91—TABLES

TABLE 1.—SYMBOLS USED IN SUBPARTS D AND E

Symbol	Term	Unit
A_{YM}	Final weighted emission test results	g/kW-hr
C_3H_8	Propane	
C_B	Concentration of emission in background sample	ppm
C_D	Concentration of emission in dilute sample	ppm
CO	Carbon monoxide	
CO_2	Carbon dioxide	
conc	Concentration (ppm by volume)	ppm
D_{XX}	Density of a specific emission (XX)	g/m^3
DXX	Volume concentration of a specific emission (XX) on a dry basis	percent
DF	Dilution factor of dilute exhaust.	
D1	Water vapor mixture concentration	percent
f	Engine specific parameter considering atmospheric conditions	
G_{AIRD}	Intake air mass flow rate on dry basis	kg/h
G_{Fuel}	Fuel mass flow rate	kg/h
GP	Analyzer standard operating pressure	Pa
G_s	Mass of carbon measured during a sampling period	g
H	Absolute humidity (water content related to dry air)	gr/kg
H_2	Hydrogen	
i	Subscript denoting an individual mode	
IT	Indicated torque	N-m
K	Wet to dry conversion factor	
K_H	Humidity correction factor	
K_V	Calibration coefficient for critical flow venturi	
M_{XX}	Molecular weight of a specific molecule(XX)	g/mole
mass	Pollutant mass flow	g/h
M_{FUEL}	Mass of fuel consumed during a sampling period	g
N	Pump revolutions during test period	revs
N_2	Nitrogen	
NO	Nitric oxide	

TABLE 1.—SYMBOLS USED IN SUBPARTS D AND E—Continued

Symbol	Term	Unit
NO_2	Nitrogen dioxide	
NO_X	Oxides of nitrogen	
O_2	Oxygen	
O_2I	Oxygen concentration of the burner air	percent
P	Absolute pressure	kPa
P_{AUX}	Declared total power absorbed by auxiliaries fitted for the test	kW
P_B	Total barometric pressure (average of the pre-test and post-test values).	kPa
P_{dew}	Test ambient saturation vapor pressure at the dew point	kPa
P_e	Absolute pump outlet pressure	kPa
P_{ED}	Pressure drop between the inlet and throat of metering venturi	kPa
P_i	$P_i=P_{M,i} + P_{AUX,i}$	
P_M	Maximum power measured at the test speed under test conditions.	kW
P_P	Absolute pump inlet pressure	kPa
P_{PI}	Inlet pressure depression of venturi or pump	kPa
P_{PO}	Pressure head at CVS pump outlet	kPa
P_s	Dry atmospheric pressure	kPa
P_V	Absolute venturi inlet pressure	kPa
P_{wb}	Saturated vapor pressure	Pa
Q_C	Volumetric flow rate of dilute exhaust through CVS at STP	m^3/hr
Q_S	Gas flow rate	m^3/min
R_{STP}	Ideal gas constant at STP	m^3/mole
R_2	Fuel carbon weight fraction	g/g
STP	Standard temperature and pressure	
t	Elapsed time for test period	sec.
T	Absolute temperature at air inlet	°C
T_a	Ambient temperature	°C
T_{EI}	Air temperature in to metering venturi or flowmeter	°C
T_K	Absolute temperature	K
T_P	Absolute pump inlet temperature	°C
T_{PI}	Air temperature at CVS pump inlet	°C
T_{PO}	Air temperature at CVS pump outlet	°C
T_V	Absolute venturi inlet temperature	°C
V_O	Pump flow	m^3/rev
W	Average mass flow of emissions	g/hr
W_{XX}	Mass rate of specific emission (XX)	g/hr
WXX	Volume concentration in exhaust of specific emission (XX) on wet basis.	ppm, ppmC, %
WF	Weighing factor	
Z1	Water concentration	percent
α	Fuel specific factor representing the hydrogen to carbon ratio.	

TABLE 2.—MEASUREMENT ACCURACY CALIBRATION FREQUENCY

No.	Item	Permissible deviation from reading [1]		Calibration frequency
		non-idle	idle	
1	Engine speed	±2%	±2%	Monthly.
2	Torque	±5%		Monthly.
3	Fuel consumption	±1%	±5%	Monthly.
4	Air consumption	±2%	±5%	As required.
5	Coolant temperature	±2 °C	Same	As required.
6	Lubricant temperature	±2 °C	Same	As required.
7	Exhaust back pressure	±5%	Same	As required.
8	Inlet depression	±5%	Same	As required.
9	Exhaust gas temperature	±15 °C	Same	As required.
10	Air inlet temperature (combustion air)	±2 °C	Same	As required.
11	Atmospheric pressure	±0.5%	Same	As required.
12	Humidity (combustion air) (relative)	±3.0%	Same	As required.
13	Fuel temperature	±2 °C	Same	As required.
14	Temperature with regard to dilution system.	±2 °C	Same	As required.
15	Dilution air humidity	±3% absolute	Same	As required.
16	HC analyzer	±2% [2]	Same	Monthly.
17	CO analyzer	±2% [2]	Same	Monthly.
18	NO_X analyzer	±2% [2]	Same	Monthly.
19	NO_X converter check	90%	Same	Monthly.
20	CO_2 analyzer	±2% [2]	Same	Monthly.

[1] All accuracy requirements pertain to the final recorded value which is inclusive of the data acquisition system.

[2] If reading is under 100 ppm then the accuracy shall be ±2 ppm.

TABLE 3.—TEST FUEL SPECIFICATIONS

Item	Property	Tolerance	Procedure (ASTM) [1]
Sulfur, ppm max	1000	.....	D 2622
Benzene, max. percent	1.5	.....	D 3606
RVP, psi	8.6	±0.6	D 323
Octane, R+M/2	89.9	±3.1	D 2699 D 2700
IBP, ° C	32.8	±11.0	D 86
10% point, ° C	53.3	±5.5	D 86
50% point, ° C	101.7	±8.3	D 86
90% point, ° C	160.0	±11.1	D 86
End Point, max. ° C	212.8	.....	D 86
Phosphorus, g/l, max	0.02	.....	D 3231
Lead, g/l, max	0.02	.....	.....
Manganese, g/l, max	0.004	.....	.....
Aromatics, max. percent	35	.....	D 1319
Olefins, max. percent	10	.....	D 1319
Saturates, percent	remain	.....	D 1319

[1] All ASTM Procedures in this table have been incorporated by reference. See §91.6.

APPENDIX B TO SUBPART D OF PART 91—FIGURES

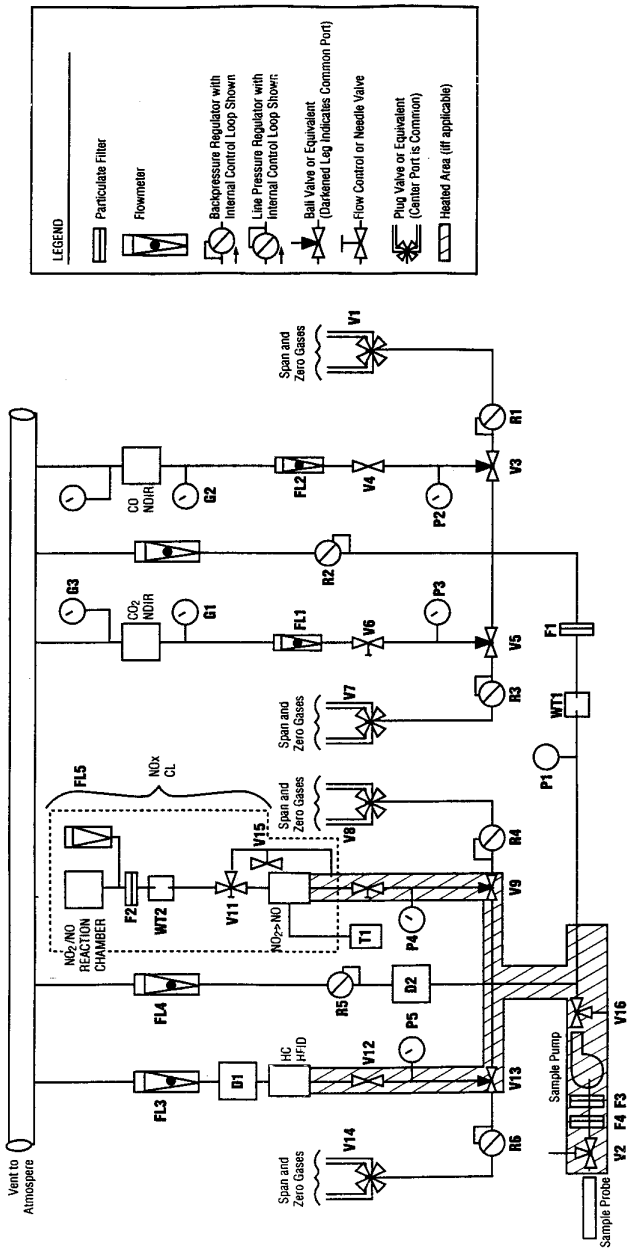

Figure 1. — Exhaust Gas Sampling and Analytical Train, Continuous Sampling

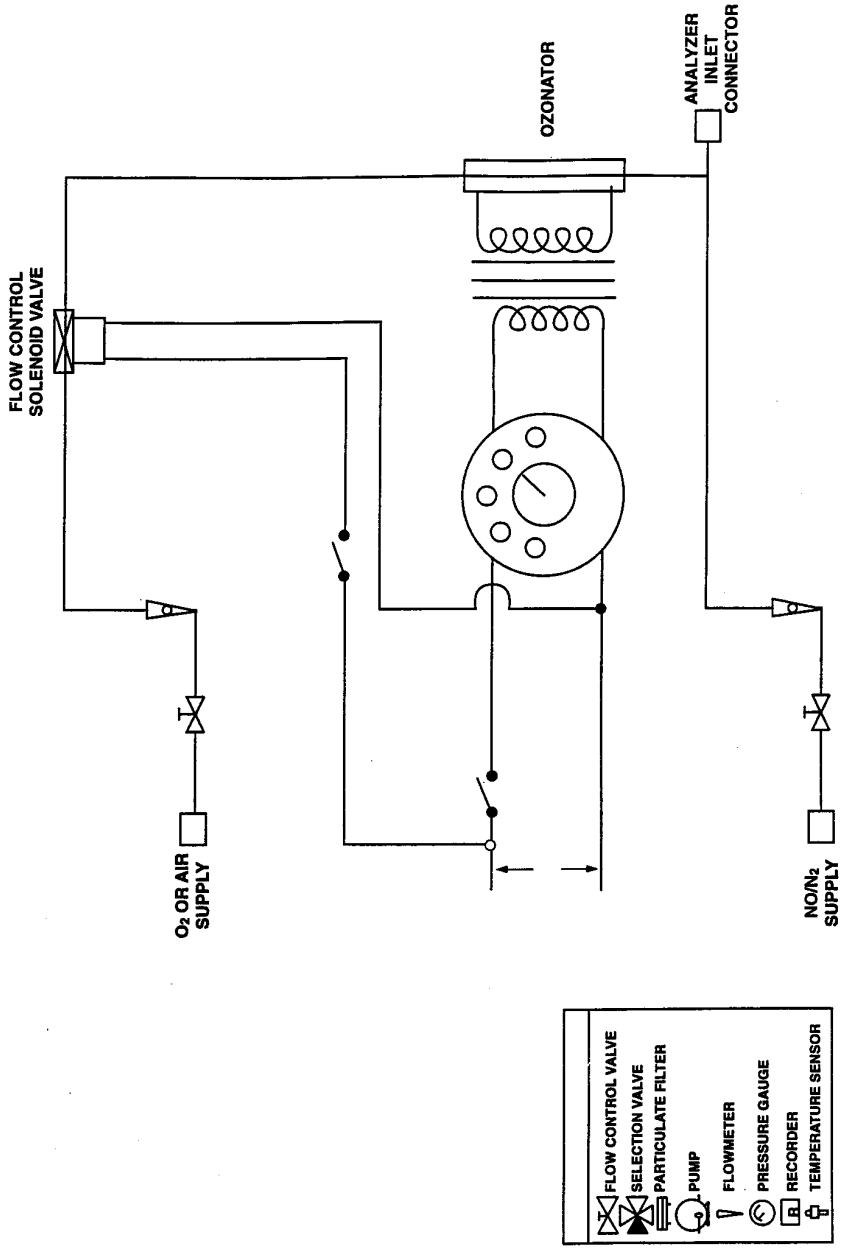

Figure 2. — NOx Converter Efficiency Detector

Subpart E—Gaseous Exhaust Test Procedures

§ 91.401 Scope; applicability.

(a) This subpart describes the procedures to follow in order to perform exhaust emission tests on new marine gasoline-fueled spark-ignition propulsion engines subject to the provisions of subpart A of this part 91. Provisions specific to raw gas sampling are in §§ 91.414 through 91.419, provisions specific to constant volume sampling are in §§ 91.420 through 91.426. All other sections in this subpart apply to both raw gas sampling and constant volume sampling unless indicated otherwise.

(b) Requirements for emission test equipment and calibrating this equipment are found in subpart D of this part.

§ 91.402 Definitions.

The definitions in §§ 91.3, 91.102, and 91.302 apply to this subpart.

§ 91.403 Symbols and abbreviations.

(a) The abbreviations in § 91.5 apply to this subpart.

(b) The symbols in Table 1 in appendix A to subpart D apply to this subpart.

§ 91.404 Test procedure overview.

(a) The test consists of prescribed sequences of engine operating conditions to be conducted on an engine dynamometer or equivalent load and speed measurement device. The exhaust gases generated during engine operation are sampled either raw or dilute, and specific components are analyzed through the analytical system.

(b) The tests are designed to determine the brake-specific emissions of hydrocarbons, carbon monoxide, and oxides of nitrogen. The test consists of one idle mode and four power modes with an exponential relationship between torque and speed which span the typical operating range of spark-ignition marine propulsion engines. These procedures require the determination of the concentration of each pollutant, fuel flow, and the power output during each mode. The measured values are weighted and used to calculate the grams of each pollutant emitted per brake kilowatt hour (g/kW-hr).

(c)(1) When an engine is tested for exhaust emissions the complete engine is tested, with all emission control devices installed and functioning.

(2) Additional accessories (for example, oil cooler, alternators, and so forth) may be installed, but such accessory loading will be considered parasitic in nature and observed power is used in the emission calculation.

(d) All emission control systems installed on or incorporated in the application must be functioning during all procedures in this subpart. In cases of component malfunction or failure, no maintenance is allowed without prior approval from the Administrator in accordance with § 91.118.

§ 91.405 Recorded information.

(a) Record the information described in this section for each test where applicable.

(b) *Test data; general.* (1) Engine identification number.

(2) Engine emissions control system.

(3) Test operator(s).

(4) Number of hours of operation accumulated on the engine prior to beginning the warm-up portion of the test (to the nearest tenth hour).

(5) Fuel identification.

(6) For two-stroke engines, fuel/oil mixture ratio.

(7) Date of most recent analytical assembly calibration.

(8) All pertinent instrument information such as tuning, gain, serial numbers, detector number, and calibration curve numbers. As long as this information is traceable, it may be summarized by system number or analyzer identification numbers.

(c) *Test data; pre-test.* (1) Date and time of day.

(2) Test number.

(3) Barometric pressure; as an option, barometric pressure can be measured as a modal measurement instead of or in addition to a pre- and post-test measurement.

(4) Recorder chart or equivalent. Identify for each test segment zero traces for each range used, and span traces for each range used.

(d) *Test data; modal.* (1) Recorder chart or equivalent. Identify for each

test mode the emission concentration traces and the associated analyzer range(s).

(2) Observed engine torque.

(3) Observed engine rpm.

(4) Engine intake air flow, if applicable.

(5) Test cell temperature and humidity for each mode.

(6) For raw gas testing; fuel flow for each mode. Fuel flow measurement is not required for dilute testing but is allowed. If the fuel flow measurement is a volume measurement system, record the fuel temperature in the measurement system for fuel density corrections to the mass flow rate. If the fuel temperature is within 3 °C of the calibration temperature, no density correction is required.

(7) Engine intake temperature and humidity for each mode, if applicable.

(8) Exhaust sample line temperature, if applicable.

(e) *Test data; post-test.* (1) Recorder chart or equivalent. Identify the hang-up check.

(2) Recorder chart or equivalent. Identify the zero traces for each range used and the span traces for each range used.

(3) Total number of hours of operation accumulated on the engine (to the nearest tenth hour).

(4) Barometric pressure, post-test segment.

§91.406 Engine parameters to be measured and recorded.

Measure or calculate, then record, the engine parameters in Table 1 in appendix A of this subpart.

§91.407 Engine inlet and exhaust systems.

(a) The marine engine manufacturer is liable for emission compliance over the full range of restrictions that are specified by the manufacturer for that particular engine.

(b) The air inlet filter system and exhaust muffler system combination used on the test engine must be the systems expected to yield the highest emission levels.

§91.408 Pre-test procedures.

(a) *Engine service accumulation and stabilization procedure.* Use the service accumulation procedure determined by the manufacturer for exhaust emission stabilizing of an engine, consistent with good engineering practice (see §91.117).

(1) The manufacturer determines, for each engine family, the number of hours at which the engine exhaust emission control system combination is stabilized for emission testing. However, this stabilization procedure may not exceed 12 hours. The manufacturer must maintain, and provide to the Administrator upon request, a record of the rationale used in making this determination. If the manufacturer can document that, at some time prior to the full 12 hour service accumulation period, the engine emissions are decreasing for the remainder of the 12 hours, the service accumulation may be completed at that time. The manufacturer may elect to accumulate 12 hours on each test engine within an engine family without making this determination.

(2) During service accumulation, the fuel and lubricants specified in §91.308 must be used.

(3) Engine maintenance during service accumulation is allowed only in accordance with §91.117.

(b) *Engine pre-test preparation.* (1) Drain and charge the fuel tank(s) with the specified test fuel (see §91.308) to 50 percent of the tank's nominal capacity. If an external fuel tank is used, the engine fuel inlet system pressure must be typical of what the engine will see in use.

(2) Operate the engine on the dynamometer measuring the fuel consumption (fuel consumption required only for raw gas sampling method) and torque before and after the emission sampling equipment is installed, including the sample probe, using mode 1 from Table 2 in appendix A of this subpart. The emission sampling equipment may not significantly affect the operational characteristics of the engine (typically, the results should agree within five percent).

(c) *Analyzer pre-test procedures.* (1) If necessary, warm up and stabilize the analyzer(s) before calibrations are performed.

(2) Replace or clean the filter elements and then vacuum leak check the

system per §91.324(a). If necessary, allow the heated sample line, filters, and pumps to reach operating temperature.

(3) Perform the following system checks:

(i) If necessary, check the sample-line temperature. Heated FID sample line temperature must be maintained between 110 °C and 230 °C, a heated NO_X sample line temperature must be maintained between 60 °C and 230 °C.

(ii) Check that the system response time has been accounted for prior to sample collection data recording.

(iii) A hang-up check is permitted.

(4) Check analyzer zero and span before and after each test at a minimum. Further, check analyzer zero and span any time a range change is made or at the maximum demonstrated time span for stability for each analyzer used.

(d) Check system flow rates and pressures and reset if necessary.

§91.409 Engine dynamometer test run.

(a) Engine and dynamometer start-up.

(1) Only adjustments in accordance with §91.118 may be made to the test engine prior to starting a test.

(2) If necessary, warm up the dynamometer as recommended by the dynamometer manufacturer ore good engineering practice.

(3) At the manufacturer's option, the engine can be run with the throttle in a fixed position or by using the engine's governor (if the engine is manufactured with a governor). In either case, the engine speed and load must meet the requirements specified in paragraph (b)(12) of this section.

(b) Each test consists of the following:

(1) Record the general test data as specified in §91.405.

(2) Precondition the engine in the following manner;

(i) Operate the engine at idle for 2 to 3 minutes;

(ii) Operate the engine at a power greater than or equal to 50 percent power at the rated speed for 5 to 7 minutes;

(iii) Operate the engine at rated speed and maximum power for 25 to 30 minutes;

(iv) Option. For four-stroke engines, where appropriate, it is permitted to precondition the engine at rated speed and maximum power until the oil and water temperatures are stabilized. The temperatures are defined as stabilized if they are maintained within 2 percent of point for 2 minutes. The engine must be operated a minimum of 10 minutes for this option. This optional procedure may be substituted for step in paragraphs (b)(2)(iii) of this section;

(v) Option. If the engine has been operating on service accumulation for a minimum of 40 minutes, the service accumulation may be substituted for steps in paragraphs (b)(2) (i) through (iii) of this section.

(3) Record all pre-test data specified in §91.405(c).

(4) Start the test cycle (see §91.410) within 10 minutes of the completion of the steps required by paragraph (b)(2) of this section.

(5) During the first mode calculate the torque corresponding to 71.6, 46.5, and 25.3 percent of the maximum observed torque for the rated speed (see Table 2 in appendix A of this subpart).

(6) Once engine speed and load are set for a mode, run the engine for a sufficient period of time to achieve thermal stability. At the manufacturers option, determine and document the appropriate criterion for thermal stability for each engine family.

(7) Record all modal data specified in §91.405(e) for a minimum time period of the last two minutes of each mode. Longer averaging periods are acceptable, but the data averaged must be from a continuous time period. The duration of time during which this data is recorded is referred to as the ''sampling period.'' The data collected during the sampling period is used for modal emission calculations.

(8) Continuously record the analyzer's response to the exhaust gas during the sampling period.

(9) Modes may be repeated.

(10) If a delay of more than one hour occurs between the end of one mode and the beginning of another mode, the test is void and must be restarted as described at paragraph (b)(1) of this section.

(11) The engine speed and load must be maintained within the requirements

of §91.410 during the sampling period for each mode. If this requirement is not met, the mode is void and must be restarted.

(12) If at any time during a mode, the test equipment malfunctions or the specifications in §91.410 can not be met, the test is void, and must be aborted. Corrective action should be taken and the test restarted.

(13) Fuel flow and air flow during the idle condition may be determined just prior to or immediately following the dynamometer sequence, if longer times are required for accurate measurements. If the dilute sampling method (Constant Volume Sampling) is used, neither fuel flow nor air flow measurements are required.

(c) Exhaust gas measurements. (1) Measure HC, CO, CO_2, and NO_X concentration in the exhaust sample.

(2) Each analyzer range that may be used during a test segment must have the zero and span responses recorded prior to the start of the test. Only the range(s) used to measure the emissions during the test is required to have its zero and span recorded after the completion of the test. Depending on the stability of each individual analyzer, more frequent zero checks or spans between modes may be necessary.

(3) It is permitted to change filter elements between test segments.

(4) A leak check is permitted between modes.

(5) A hang-up check is permitted between modes (see §91.413).

(6) If, during the emission measurement portion of a mode, the value of the gauges downstream of the NDIR analyzer(s) G3 or G4 (See Figure 1 in appendix B of subpart D of this part) differs by more than ±0.5 kPa, the mode is void.

§91.410 Engine test cycle.

(a) The 5-mode cycle specified in Table 2 in appendix A to this subpart shall be followed in dynamometer operation tests of marine engines.

(b) During each non-idle mode the specified speed and load shall be held to within ±50 rpm or ± 2 percent of point, whichever is greater. During each idle mode the engine speed shall be held within ±75 rpm or ± 5 percent of the manufacturers specified idle speed, whichever is greater. For direct drive products (no neutral gear), it is acceptable to have an accessory load on the engine during the idle mode provided that the engine speed is within ± 5 percent of the manufacturers specified idle speed and the accessory load is representative of in use operation.

(c) If the operating conditions specified in paragraph (b) of this section for modes 2, 3, 4, and 5 cannot be maintained, the Administrator may authorize deviations from the specified load conditions. Such deviations shall not exceed 10 percent of the maximum torque at the test speed. The minimum deviations, above and below the specified load, necessary for stable operation shall be determined by the manufacturer and approved by the Administrator prior to the test run.

(d) Do not include power generated during the idle mode (mode 5) in the calculation of emissions results.

§91.411 Post-test analyzer procedures.

(a) Perform a hang-up check within 60 seconds of the completion of the last mode in the test. Use the following procedure:

(1) Introduce a zero-grade gas or room air into the sample probe or valve V2 (see Figure 1 in appendix B of subpart D of this part) to check the ''hang-up zero'' response. Simultaneously start a time measurement.

(2) Select the lowest HC range used during the test.

(3) Within four minutes of beginning the time measurement in paragraph (a)(1) of this section, the difference between the zero gas response and the hang-up zero response shall not be greater than 5.0 percent of full scale or 10 ppmC whichever is greater.

(b) Begin the analyzer span checks within six minutes after the completion of the last mode in the test. Record for each analyzer the zero and span response for each range used during the preceding test or test segment.

(c) If during the test, the filter element(s) were replaced or cleaned, a vacuum check must be performed per §91.324(a) immediately after the span checks. If the vacuum side leak check does not meet the requirements of §91.324(a) the test is void.

(d) Read and record the post-test data specified in § 91.405(e).

(e) For a valid test, the analyzer drift between the before-segment and after-segment span checks for each analyzer must meet the following requirements:

(1) The span drift (defined as the change in the difference between the zero response and the span response) must not exceed two percent of full-scale chart deflection for each range used.

(2) The zero response drift must not exceed two percent of full-scale chart deflection for each range used above 155 ppm (or ppm C), or three percent of full-scale chart deflection for each range below 155 ppm (or ppm C).

§ 91.412 Data logging.

(a) A computer or any other automatic data collection (ADC) device(s) may be used as long as the system meets the requirements of this subpart.

(b) Determine from the data collection records the analyzer responses corresponding to the end of each mode.

(c) Record data at a minimum of one Hz (one time per second).

(d) Determine the final value for power by averaging the individually calculated power points for each value of speed and torque recorded during the sampling period. As an alternative, the final value for power can be calculated from the average values for speed and torque, collected during the sampling period.

(e) Determine the final value for CO_2, CO, HC, and NO_X concentrations by averaging the concentration of each point taken during the sample period for each mode.

§ 91.413 Exhaust sample procedure—gaseous components.

(a) Automatic data collection equipment requirements. The analyzer response may be read by automatic data collection (ADC) equipment such as computers, data loggers, etc. If ADC equipment is used the following is required:

(1) For dilute grab (''bag'') analysis, the analyzer response must be stable at greater than 99 percent of the final reading for the dilute exhaust sample bag. A single value representing the average chart deflection over a 10-second stabilized period shall be stored.

(2) For continuous analysis systems, a single value representing the average integrated concentration over a cycle shall be stored. Alternatively, the ADC may store the individual instantaneous values collected during the measurement period.

(3) The chart deflections or average integrated concentrations required in paragraphs (a)(1) and (a)(2) of this section may be stored on long-term computer storage devices such as computer tapes, storage discs, punch cards, and so forth, or they may be printed in a listing for storage. In either case a chart recorder is not required and records from a chart recorder, if they exist, need not be stored.

(4) If ADC equipment is used to interpret analyzer values, the ADC equipment is subject to the calibration specifications of the analyzer as if the ADC equipment is part of analyzer system.

(b) Data records from any one or a combination of analyzers may be stored as chart recorder records.

(c) Grab sample analysis. For dilute grab sample analysis perform the following sequence:

(1) Calibrate analyzers using the procedure described in § 91.326.

(2) Record the most recent zero and span response as the pre-analysis value.

(3) Measure HC, CO, CO_2, and NO_X background concentrations in the sample bag(s) and background sample bag(s) using the same flow rates and pressures.

(4) Good engineering practice dictates that analyzers used for continuous analysis should be operated such that the measured concentration falls between 15 percent and 100 percent of full scale.

(5) A post-analysis zero and span check of each range must be performed and the values recorded. The number of events that may occur between the pre and post checks is not specified. However, the difference between pre-analysis zero and span values (recorded in paragraph (c)(5) or (c)(6) of this section) versus those recorded for the post-analysis check may not exceed the zero drift limit or the span drift limit

of 2 percent of full scale chart deflection for any range used. Otherwise the test is void.

(d) Continuous sample analysis. For continuous sample analysis, perform the following sequence:

(1) Calibrate analyzers using the procedures described in §91.326.

(2) Leak check portions of the sampling system that operate at negative gauge pressures when sampling, and allow heated sample lines, filters, pumps, and so forth to stabilize at operating temperature.

(3) Option: Determine the hang-up for the FID or HFID sampling system:

(i) Zero the analyzer using zero air introduced at the analyzer port.

(ii) Flow zero air through the overflow sampling system. Check the analyzer response.

(iii) If the overflow zero response exceeds the analyzer zero response by two percent or more of the FID or HFID full-scale deflection, hang-up is indicated and corrective action must be taken (see paragraph (e) of this section).

(iv) The complete system hang-up check specified in paragraph (f) of this section is recommended as a periodic check.

(4) Obtain a stable zero reading.

(5) Good engineering practice dictates that analyzers used for continuous analysis should be operated such that the measured concentration falls between 15 percent and 100 percent of full scale.

(6) Record the most recent zero and span response as the pre-analysis values.

(7) Collect background HC, CO, CO_2, and NO_X in a sample bag (for dilute exhaust sampling only, see §91.422).

(8) Perform a post-analysis zero and span check for each range used at the conditions specified in paragraph (d)(1) of this section. Record these responses as the post-analysis values.

(9) Neither the zero drift nor the span drift between the pre-analysis and post-analysis checks on any range used may exceed three percent for HC, or two percent for NO_X, CO, and CO_2, of full scale chart deflection, or the test is void. (If the HC drift is greater than three percent of full-scale chart deflection, hydrocarbon hang-up is likely.)

(10) Determine background levels of NO_X, CO, or CO_2 (for dilute exhaust sampling only) by the grab (''bag'') technique outlined in paragraph (c) of this section.

(e) Hydrocarbon hang-up. If HC hang-up is indicated, the following sequence may be performed:

(1) Fill a clean sample bag with background air.

(2) Zero and span the HFID at the analyzer ports.

(3) Analyze the background air sample bag through the analyzer ports.

(4) Analyze the background air through the entire sample probe system.

(5) If the difference between the readings obtained is two ppm or more, clean the sample probe and the sample line.

(6) Reassemble the sample system, heat to specified temperature, and repeat the procedure in paragraphs (e)(1) through (e)(5) of this section.

§91.414 Raw gaseous exhaust sampling and analytical system description.

(a) Schematic drawing. An example of a sampling and analytical system which may be used for testing under this subpart is shown in Figure 4 in appendix B of this subpart. All components or parts of components that are wetted by the sample or corrosive calibration gases shall be either chemically cleaned stainless steel or inert material (e.g., polytetrafluoroethylene resin). The use of ''gauge savers'' or ''protectors'' with nonreactive diaphragms to reduce dead volumes is permitted.

(b) Sample probe. (1) The sample probe shall be a straight, closed end, stainless steel, multi-hole probe. The inside diameter shall not be greater than the inside diameter of the sample line + 0.03 cm. The wall thickness of the probe shall not be greater than 0.10 cm. The fitting that attaches the probe to the exhaust pipe shall be as small as practical in order to minimize heat loss from the probe.

(2) The probe shall have a minimum of three holes. The spacing of the radial planes for each hole in the probe must be such that they cover approximately equal cross-sectional areas of

the exhaust duct. The angular spacing of the holes must be approximately equal. The angular spacing of any two holes in one plane may not be 180° ± 20° (i.e., section C-C of Figure 1 in appendix B of this subpart). The holes should be sized such that each has approximately the same flow. If only three holes are used, they may not all be in the same radial plane.

(3) The exhaust gas probe must be located in a position which yields a well mixed, homogeneous sample of the engine exhaust. The probe must extend radially through the exhaust duct prior to where the exhaust mixes with the cooling water. The cooling water flow may be rerouted if necessary to obtain an emission sample provided that the modification has no significant effect on the performance or emissions characteristics of the engine. The probe must pass through the approximate center and must extend across at least 80 percent of the diameter of the duct. The exact position of the probe may vary from engine family to engine family.

(c) Sample transfer line. (1) The maximum inside diameter of the sample line shall not exceed 1.32 cm.

(2) If valve V2 in Figure 1 of appendix B of Subpart D of this part is used, the sample probe must connect directly to valve V2 in Figure 1 of appendix B of subpart D of this part. The location of optional valve V2 may not be greater than 1.22 m from the exhaust duct.

(3) The location of optional valve V16 in Figure 1 of appendix B of subpart D of this part may not be greater than 61 cm from the sample pump. The leakage rate for this section on the pressure side of the sample pump may not exceed the leakage rate specification for the vacuum side of the pump.

(d) Venting. All vents including analyzer vents, bypass flow, and pressure relief vents of regulators should be vented in such a manner to avoid endangering personnel in the immediate area.

(e) Any variation from the specifications in this subpart including performance specifications and emission detection methods may be used only with prior approval by the Administrator.

(f) Additional components, such as instruments, valves, solenoids, pumps, switches, and so forth, may be employed to provide additional information and coordinate the functions of the component systems.

(g) The following requirements must be incorporated in each system used for raw testing under this subpart.

(1) Take the sample for all components with one sample probe and split it internally to the different analyzers.

(2) Heat the sample transport system from the engine exhaust pipe to the HC analyzer for the raw gas sampling method as indicated in Figure 1 in appendix B of subpart D of this part. The NO_X analyzer for the raw gas sampling method may be heated as indicated in Figure 1 in appendix B of subpart D of this part. The HC analyzer and the NO_X analyzer for the dilute sampling method may be heated as indicated in Figure 1 in appendix B of subpart D of this part.

§ 91.415 Raw gaseous sampling procedures.

Fit all heated sampling lines with a heated filter to extract solid particles from the flow of gas required for analysis. The sample line for HC measurement must be heated. The sample line for CO, CO_2, and NO_X may be heated or unheated.

§ 91.416 Intake air flow measurement specifications.

(a) If used, the engine intake air flow measurement method used must have a range large enough to accurately measure the air flow over the engine operating range during the test. Overall measurement accuracy must be ± 2 percent of full-scale value of the measurement device for all modes except the idle mode. For the idle mode, the measurement accuracy shall be ± 5 percent or less of the full-scale value. The Administrator must be advised of the method used prior to testing.

(b) When an engine system incorporates devices that affect the air flow measurement (such as air bleeds, air injection, pulsed air, and so forth) that result in understated exhaust emission results, make corrections to the exhaust emission results to account for such effects.

§91.417 Fuel flow measurement specifications.

(a) Fuel flow measurement is required only for raw testing but is allowed for dilute testing.

(b) The fuel flow rate measurement instrument must have a minimum accuracy of ± 2 percent of full-scale flow rate for each measurement range used.

§91.418 Data evaluation for gaseous emissions.

For the evaluation of the gaseous emissions recording, record the last two minutes of each mode and determine the average values for HC, CO, CO_2, and NO_X during each mode from the average concentration readings determined from the corresponding calibration data.

§91.419 Raw emission sampling calculations.

(a) Derive the final test results through the steps described in this section.

(b) Air and fuel flow method. If both air and fuel flow mass rates are measured, the following equations are used to determine the weighted emission values for the test engine:

$$W_{NO_X} = \left(G_{AIRD} + G_{FUEL}\right) \times \frac{M_{NO_2}}{M_{exh}} \times WNO_X \times K_H \times \frac{1}{10^6}$$

$$W_{HC} = \left(G_{AIRD} + G_{FUEL}\right) \times \frac{M_{HC_{exh}}}{M_{exh}} \times WHC \times \frac{1}{10^6}$$

$$W_{CO} = \left(G_{AIRD} + G_{FUEL}\right) \times \frac{M_{CO}}{M_{exh}} \times WCO \times \frac{1}{10^2}$$

Where:

W_{HC} = Mass rate of HC in exhaust [g/hr],

G_{AIRD} = Intake air mass flow rate on dry basis [g/hr],

G_{FUEL} = Fuel mass flow rate [g/hr],

M_{HCexh} = Molecular weight of hydrocarbons in the exhaust; see the following equation:

$$M_{HC_{exh}} + 12.01 + 1.008 \times \alpha$$

Where:

α=Hydrocarbon/carbon atomic ratio of the fuel.

M_{exh}=Molecular weight of the total exhaust; see the following equation:

$$M_{exh} = \frac{M_{HC_{exh}} \times WHC}{10^6} + \frac{28.01 \times WCO}{10^2} + \frac{44.1 \times WCO_2}{10^2} + \frac{46.01 + WNO_X}{10^6} + \frac{2.016 \times WH_2}{10^2} + 18.01 \times (1 - K) + 28.01 \times \frac{\left[100 - \frac{WHC}{10^4} - WCO - WCO_2 \frac{WNO_X}{10^4} - WH_2 - 100 \times (1 - K)\right]}{10^2}$$

Where:

WHC = HC volume concentration in exhaust, ppmC wet

WCO = CO percent concentration in the exhaust, wet

DCO = CO percent concentration in the exhaust, dry

WCO_2 = CO_2 percent concentration in the exhaust, wet

DCO_2 = CO_2 percent concentration in the exhaust, dry

WNO_X = NO volume concentration in exhaust, ppm wet

WH_2 = H_2 percent concentration in exhaust, wet

K = correction factor to be used when converting dry measurements to a wet basis. Therefore, wet concentration = dry concentration × K, where K is:

$$\frac{1}{1+0.005\times\left(DCO+DCO_2\right)\times\alpha-0.01\times DH_2}$$

DH_2 = H_2 percent concentration in exhaust, dry, calculated from the following equation:

$$DH_2=\frac{0.5\times\alpha\times DCO\times\left(DCO+DCO_2\right)}{DCO+\left(3\times DCO_2\right)}$$

W_{CO} = Mass rate of CO in exhaust, [g/hr]

M_{CO} = Molecular weight of CO = 28.01

W_{NOx} = Mass rate of NO_X in exhaust, [g/hr]

M_{NO2} = Molecular weight of NO_2 = 46.01

K_H = Factor for correcting the effects of humidity on NO_2 formation for four-stroke gasoline engines; see the equation below:

$$K_H=\frac{1}{1-0.0329\times\left(H-10.71\right)}$$

Where:

H = specific humidity of the intake air in grams of moisture per kilogram of dry air.

For two-stroke gasoline engines, KH should be set to 1.

(c) Fuel flow method. The following equations are to be used when fuel flow is selected as the basis for mass emission calculations using the raw gas method.

$$W_{HC}=\frac{G_{FUEL}}{TC}\times\frac{WHC}{10^4}$$

$$W_{CO}=\frac{M_{CO}}{M_F}\times\frac{G_{FUEL}}{TC}\times WCO$$

$$W_{NO_X}=\frac{M_{NOX}}{M_F}\times\frac{G_{FUEL}}{TC}\times\frac{WNO_X}{10^4}\times K_H$$

Where:

W_{HC} = Mass rate of HC in exhaust, [g/hr]

M_F = Molecular weight of test fuel; see following equation:

$$M_F=12.01+1.008\times\alpha$$

G_{FUEL} = Fuel mass flow rate, [g/hr]

TC = Total carbon; see following equation:

$$TC=WCO+WCO_2+\frac{WHC}{10^4}$$

WHC = HC volume concentration in exhaust, ppmC wet

WCO = CO percent concentration in the exhaust, wet

DCO = CO percent concentration in the exhaust, dry

WCO_2 = CO_2 percent concentration in the exhaust, wet

DCO_2 = CO_2 percent concentration in the exhaust, dry

WNO_x = NO volume concentration in exhaust, ppm wet

WH2 = H_2 percent concentration in exhaust, wet

K = correction factor to be used when converting dry measurements to a wet basis. Therefore, wet concentration = dry concentration × K, where K is:

$$K = \frac{1}{1 + 0.005 \times (DCO + DCO_2) \times \alpha - 0.01 \times DH_2}$$

DH_2 = H_2 percent concentration in exhaust, dry, calculated from the following equation:

$$DH_2 = \frac{0.5 \times \alpha \times DCO \times (DCO + DCO_2)}{DCO + (3 \times DCO_2)}$$

W_{CO} = Mass rate of CO in exhaust, [g/hr]

M_{CO} = Molecular weight of CO = 28.01

W_{NOx} = Mass rate of NO_X in exhaust, [g/hr]

M_{NO2} = Molecular weight of NO_2 = 46.01

K_H = Factor for correcting the effects of humidity on NO_2 formation for four-stroke gasoline engines; see the equation below:

$$K_H = \frac{1}{1 - 0.0329 \times (H - 10.71)}$$

Where:

H = specific humidity of the intake air in grams of moisture per kilogram of dry air.

For two-stroke gasoline engines, KH should be set to 1.

(d) The final reported emission test results must be computed by using the following formula for each individual gas component:

$$Y_{wm} = \frac{\Sigma(W_i \times f_i)}{\Sigma(P_i \times f_i)}$$

Where:

Y_{wm} = Weighted mass emission level (HC, CO, NO_x) for a test [g/kW-hr].

W_i = Average mass flow rate (W_{HC}, W_{CO}, W_{NOx}) of an emission from the test engine during mode i, [g/hr].

f_i = Weighting factors for each mode according to § 91.410(a)

P_i = Average power measured during mode i, [kW], calculated according to the formula given in § 91.423(b). Power for the idle mode shall always be zero for this calculation.

(e) The final reported weighted brake-specific fuel consumption (WBSFC) shall be computed by use of the following formula:

$$WBSFC = \frac{\Sigma(F_i \times f_i)}{\Sigma(P_i \times f_i)}$$

Where:

WBSFC = Weighted brake-specific fuel consumption in grams of fuel per kilowatt-hour (g/kW-hr).

F_i = Fuel mass flow rate of the engine during mode i, [g/hr].

f_i = Weighting factors for each mode according to § 91.410(a)

P_i = Average power measured during mode i, [kW], calculated according to the formula given in § 91.423(b). Power for the idle mode shall always be zero for this calculation.

§ 91.420 CVS concept of exhaust gas sampling system.

(a) A dilute exhaust sampling system is designed to directly measure the true mass of emissions in engine exhaust without the necessity of measuring either fuel flow or intake air flow. This is accomplished by diluting the exhaust produced by an engine under test with ambient background air and measuring the total diluted exhaust flow rate and the concentration of emissions within the dilute flow. Total mass flow of an emission is then easily calculated.

(b) A constant volume sampler (CVS) is typically used to control the total

amount of dilute flow through the system. As the name implies, a CVS restricts flow to a known value dependent only on the dilute exhaust temperature and pressure.

(c) For the testing described in this subpart, a CVS must consist of: A mixing tunnel into which the engine exhaust and dilutant (background) air are dumped; a dilute exhaust flow metering system; a dilute exhaust sample port; a background sample port; a dilute exhaust sampling system; and a background sampling system.

(1) *Mixing tunnel.* The mixing tunnel must be constructed such that complete mixing of the engine exhaust and background air is assured prior to the sampling probe.

(2) *Exhaust flow metering system.* A dilute exhaust flow metering system must be used to control the total flow rate of the dilute engine exhaust as described in § 91.421.

(3) *Exhaust sample port.* A dilute exhaust sample port must be located in or downstream of the mixing tunnel at a point where complete mixing of the engine exhaust and background air is assured.

(4) *Background sample port.* A dilute background sample port must be located in the stream of background air before it is mixed with the engine exhaust. The background probe must draw a representative sample of the background air during each sampling mode.

(5) *Exhaust sampling system.* The dilute exhaust sampling system controls the flow of samples from the mixing tunnel to the analyzer system. This could be either a continuous sampling system or grab (bag) sampling system. If a critical flow venturi (CFV) is used on the dilute exhaust sample probe, this system must assure that the sample CFV is in choke flow during testing. If no CFV is used, this system must assure a constant volumetric flow rate through the dilute exhaust sample probe or must incorporate electronic flow compensation.

(6) *Background sampling system.* The background sampling system controls the flow of samples from the background air supply to the analyzer system. This could be either a continuous sampling system or grab (bag) sampling system. This system must assure a constant volumetric flow rate through the background sample probe.

§ 91.421 Dilute gaseous exhaust sampling and analytical system description.

(a) General. The exhaust gas sampling system described in this section is designed to measure the true mass emissions of engine exhaust. This system utilizes the Constant volume Sampling (CVS) concept (described in § 91.420) of measuring mass emissions of HC, NO_x, CO, and CO_2. Grab sampling for individual modes is an acceptable method of dilute testing for all constituents, HC, NO_x, CO, and CO_2. Continuous dilute sampling is not required for any of the exhaust constituents, but is allowable for all. Heated sampling is not required for any of the constituents, but is allowable for HC and NO_x. The mass of gaseous emissions is determined from the sample concentration and total flow over the test period. As an option, the measurement of total fuel mass consumed over a cycle may be substituted for the exhaust measurement of CO_2. General requirements are as follows:

(1) This sampling system requires the use of a Positive Displacement Pump—Constant Volume Sampler (PDP–CVS) system with a heat exchanger, or a Critical Flow Venturi—Constant Volume Sampler (CFV–CVS) system with CVS sample probes and/or a heat exchanger or electronic flow compensation. Figure 2 in appendix B of this subpart is a schematic drawing of the PDP–CVS system. Figure 3 in appendix B of this subpart is a schematic drawing of the CFV–CVS system.

(2) The HC analytical system requires:

(i) Grab sampling (see § 91.420, and Figure 2 or Figure 3 in appendix B of this subpart) and analytical capabilities (see § 91.423, and Figure 4 in appendix B of this subpart), or

(ii) Continuously integrated measurement of diluted HC meeting the minimum requirements and technical specifications contained in paragraph (b)(2) of this section.

(iii) The dilute HC analytical system for marine spark-ignition engines does

not require a heated flame ionization detector (HFID).

(iv) If used, the HFID sample must be taken directly from the diluted exhaust stream through a heated probe and integrated continuously over the test cycle.

(v) The heated probe must be located in the sampling system far enough downstream of the mixing area to ensure a uniform sample distribution across the CVS duct at the sampling zone.

(3) The CO and CO_2 analytical system requires:

(i) Grab sampling (see §91.420, and Figure 2 or Figure 3 in appendix B of this subpart) and analytical capabilities (see §91.423, and Figure 4 in appendix B of this subpart), or

(ii) Continuously integrated measurement of diluted CO and CO_2 meeting the minimum requirements and technical specifications contained in paragraph (b)(4) of this section.

(4) The NO_X analytical system requires:

(i) Grab sampling (see §91.420, and Figure 2 or Figure 3 in appendix B of this subpart) and analytical capabilities (see §91.423, and Figure 4 in appendix B of this subpart), or

(ii) A continuously integrated measurement of diluted NO_X meeting the minimum requirements and technical specifications contained in paragraph (b)(4) of this section.

(5) Since various configurations can produce equivalent results, exact conformance with these drawings is not required. Additional components such as instruments, valves, solenoids, pumps, and switches may be used to provide additional information and coordinate the functions of the component systems. Other components, such as snubbers, which are not needed to maintain accuracy on some systems, may be excluded if their exclusion is based upon good engineering judgment.

(6) Other sampling and/or analytical systems may be used if shown to yield equivalent results and if approved in advance by the Administrator.

(b) Component description. The components necessary for exhaust sampling must meet the following requirements:

(1) *Exhaust dilution system.* The PDP–CVS must conform to all of the requirements listed for the exhaust gas PDP–CVS in §91.420 of this chapter. The CFV–CVS must conform to all of the requirements listed for the exhaust gas CFV–CVS in §91.420. In addition, the CVS must conform to the following requirements:

(i) The flow capacity of the CVS must be sufficient to maintain the diluted exhaust stream in the dilution system at a temperature of 190 °C or less at the sampling zone for hydrocarbon measurement and as required to prevent condensation at any point in the dilution system. Gaseous emission samples may be taken directly from this sampling point.

(ii) For the CFV–CVS, either a heat exchanger or electronic flow compensation is required (see Figure 3 in appendix B of this subpart).

(iii) For the CFV–CVS when a heat exchanger is used, the gas mixture temperature, measured at a point immediately ahead of the critical flow venturi, must be within ±11 °C of the average operating temperature observed during the test with the simultaneous requirement that condensation does not occur. The temperature measuring system (sensors and readout) must have an accuracy and precision of ±2 °C. For systems utilizing a flow compensator to maintain proportional flow, the requirement for maintaining constant temperature is not necessary.

(2) *Continuous HC measurement system.* (i) The continuous HC sample system (as shown in Figure 2 or 3 in appendix B of this subpart) uses an ''overflow'' zero and span system. In this type of system, excess zero or span gas spills out of the probe when zero and span checks of the analyzer are made.

(ii) No other analyzers may draw a sample from the continuous HC sample probe, line, or system, unless a common sample pump is used for all analyzers and the sample line system design reflects good engineering practice.

(iii) The overflow gas flow rates into the sample line must be at least 105 percent of the sample system flow rate.

(iv) The overflow gases must enter the sample line as close as practical to the outside surface of the CVS duct or dilution system.

(v) The continuous HC sampling system consists of a probe (which for a HFID analyzer must raise the sample to the specified temperature) and, where used, a sample transfer system (which for a HFID must maintain the specified temperature). The HFID continuous hydrocarbon sampling system (exclusive of the probe) must:

(A) Maintain a wall temperature of 190 ± 11 °C as measured at every separately controlled heated component (that is, filters, heated line sections), using permanent thermocouples located at each of the separate components.

(B) Have a wall temperature of 190 ± 11 °C over its entire length. The temperature of the system is demonstrated by profiling the thermal characteristics of the system where possible at initial installation and after any major maintenance performed on the system. The profiling is to be accomplished using the insertion thermocouple probing technique. The system temperature must be monitored continuously during testing at the locations and temperature described in § 91.421(b)(2).

(C) Maintain a gas temperature of 190 ± 11 °C immediately before the heated filter and HFID. Determine these gas temperatures by a temperature sensor located immediately upstream of each component.

(vi) The continuous hydrocarbon sampling probe:

(A) Is defined as the first 25.4 to 76.2 cm of the continuous hydrocarbon sampling system.

(B) Has a 0.483 cm minimum inside diameter.

(C) Is installed in the dilution system at a point where the dilution air and exhaust are well mixed and provide a homogenous mixture.

(D) Is sufficiently distant (radially) from other probes and the system wall so as to be free from the influence of any wakes or eddies.

(E) For a continuous HFID sample probe, the probe must increase the gas stream temperature to 190 ± 11 °C at the exit of the probe. Demonstrate the ability of the probe to accomplish this using the insertion thermocouple technique at initial installation and after any major maintenance. Demonstrate compliance with the temperature specification by continuously recording during each test the temperature of either the gas stream or the wall of the sample probe at its terminus.

(vii) The response time of the continuous measurement system must be taken into account when logging test data.

(3) *Sample mixing.* (i) configure the dilution system to ensure a well mixed, homogeneous sample prior to the sampling probe(s).

(ii) Make the temperature of the diluted exhaust stream inside the dilution system sufficient to prevent water condensation.

(iii) Direct the engine exhaust downstream at the point where it is introduced into the dilution system.

(4) *Continuously integrated NO_X, CO, and CO_2* measurement systems. (i) Sample probe requirements:

(A) The sample probe for continuously integrated NO_X, CO, and CO_2 must be in the same plane as the continuous HC probe, but sufficiently distant (radially) from other probes and the tunnel wall so as to be free from the influences of any wakes or eddies.

(B) The sample probe for continuously integrated NO_X, CO, and CO_2 must be heated and insulated over the entire length, to prevent water condensation, to a minimum temperature of 55° C. Sample gas temperature immediately before the first filter in the system must be at least 55° C.

(ii) Conform to the continuous NO_X, CO, or CO_2 sampling and analysis system to the specifications of part 86, subpart D of this chapter with the following exceptions and revisions:

(A) Heat the system components requiring heating only to prevent water condensation, the minimum component temperature is 55° C.

(B) Coordinate analysis system response time with CVS flow fluctuations and sampling time/test cycle offsets, if necessary.

(C) Use only analytical gases conforming to the specifications of § 91.312 for calibration, zero and span checks.

(D) Use a calibration curve conforming to § 91.321 for CO and CO_2 and § 91.318 for NO_X for any range on a linear analyzer below 155 ppm.

(iii) Convert the chart deflections or voltage output of analyzers with non-

linear calibration curves to concentration values by the calibration curve(s) specified in §91.321 before flow correction (if used) and subsequent integration takes place.

§91.423 Exhaust gas analytical system; CVS grab sample.

(a) *Schematic drawings.* Figure 4 in appendix B of this subpart is a schematic drawing of the exhaust gas analytical system used for analyzing CVS grab ''bag'' samples from spark-ignition engines. Since various configurations can produce accurate results, exact conformance with the drawing is not required. Additional components such as instruments, valves, solenoids, pumps and switches may be used to provide additional information and coordinate the functions of the component systems. Other components such as snubbers, which are not needed to maintain accuracy in some systems, may be excluded if their exclusion is based on good engineering judgement.

(b) *Major component description.* The analytical system, Figure 4 in Appendix B of this subpart, consists of a flame ionization detector (FID) or a heated flame ionization detector (HFID) for the measurement of hydrocarbons, nondispersive infrared analyzers (NDIR) for the measurement of carbon monoxide and carbon dioxide, and a chemiluminescence detector (CLD) (or heated CLD (HCLD)) for the measurement of oxides of nitrogen. The exhaust gas analytical system shall conform to the following requirements:

(1) The CLD (or HCLD) requires that the nitrogen dioxide present in the sample be converted to nitric oxide before analysis. Other types of analyzers may be used if shown to yield equivalent results and if approved in advance by the Administrator.

(2) If CO instruments are used which are essentially free of CO_2 and water vapor interference, the use of the conditioning column may be deleted. (See §§91.317 and 91.320.)

(3) A CO instrument will be considered to be essentially free of CO_2 and water vapor interference if its response to a mixture of three percent CO_2 in N_2, which has been bubbled through water at room temperature, produces an equivalent CO response, as measured on the most sensitive CO range, which is less than one percent of full scale CO concentration on ranges above 300 ppm full scale or less than 3 ppm on ranges below 300 ppm full scale. (See §91.317.)

(c) *Alternate analytical systems.* Analysis systems meeting the specifications and requirements of this subpart for dilute sampling may be used upon approval of the Administrator.

(d) *Other analyzers and equipment.* Other types of analyzers and equipment may be used if shown to yield equivalent results and if approved in advance by the Administrator.

§91.424 Dilute sampling procedure—CVS calibration.

(a) The CVS is calibrated using an accurate flowmeter and restrictor valve. (1) The flowmeter calibration shall be traceable to the National Institute for Standards and Testing (NIST), and will serve as the reference value (NIST ''true'' value) for the CVS calibration.)

(NOTE: In no case should an upstream screen or other restriction which can affect the flow be used ahead of the flowmeter unless calibrated throughout the flow range with such a device.)

(2) The CVS calibration procedures are designed for use of a ''metering venturi'' type flowmeter. Large radius or American Society of Mechanical Engineers (ASME) flow nozzles are considered equivalent if traceable to NIST measurements. Other measurement systems may be used if shown to be equivalent under the test conditions in this section and traceable to NIST measurements.

(3) Measurements of the various flowmeter parameters are recorded and related to flow through the CVS.

(4) Procedures used by EPA for both PDP–CVS and CFV–CVS are outlined below. Other procedures yielding equivalent results may be used if approved in advance by the Administrator.

(b) After the calibration curve has been obtained, verification of the entire system may be performed by injecting a known mass of gas into the system and comparing the mass indicated by the system to the true mass injected. An indicated error does not necessarily mean that the calibration is wrong, since other factors can influence the accuracy of the system (e.g.,

analyzer calibration, leaks, or HC hangup). A verification procedure is found in paragraph (e) of this section.

(c) *PDP–CVS calibration.* (1) The following calibration procedure outlines the equipment, the test configuration, and the various parameters which must be measured to establish the flow rate of the CVS pump.

(i) All the parameters related to the pump are simultaneously measured with the parameters related to a flowmeter which is connected in series with the pump.

(ii) The calculated flow rate, in cm^3/s, (at pump inlet absolute pressure and temperature) can then be plotted versus a correlation function which is the value of a specific combination of pump parameters.

(iii) The linear equation which relates the pump flow and the correlation function is then determined.

(iv) In the event that a CVS has a multiple speed drive, a calibration for each range used must be performed.

(2) This calibration procedure is based on the measurement of the absolute values of the pump and flowmeter parameters that relate the flow rate at each point. Two conditions must be maintained to assure the accuracy and integrity of the calibration curve:

(i) The temperature stability must be maintained during calibration. (Flowmeters are sensitive to inlet temperature oscillations; this can cause the data points to be scattered. Gradual changes in temperature are acceptable as long as they occur over a period of several minutes.)

(ii) All connections and ducting between the flowmeter and the CVS pump must be absolutely void of leakage.

(3) During an exhaust emission test the measurement of these same pump parameters enables the user to calculate the flow rate from the calibration equation.

(4) Connect a system as shown in Figure 5 in appendix B of this subpart. Although particular types of equipment are shown, other configurations that yield equivalent results may be used if approved in advance by the Administrator. For the system indicated, the following measurements and accuracies are required:

CALIBRATION DATA MEASUREMENTS

Parameter	Symbol	Units	Sensor-readout tolerances
Barometric pressure (corrected)	P_B	kPa	± 0.34 kPa
Ambient temperature	T_{EI}	°C	± 0.28 °C
Air temperature into metering venturi	T_{EI}	°C	± 1.11 °C
Pressure drop between the inlet and throat of metering venturi.	P_{ED}	kPa	± 0.012 kPa
Air flow	Q_S	m^3/min.	± 0.5 percent of NIST value
Air temperature at CVS pump inlet	P_{TI}	°C	± 1.11 °C
Pressure depression at CVS pump inlet	P_{PI}	kPa	± 0.055 kPa
Pressure head at CVS pump outlet	P_{PO}	kPa	± 0.055 kPa
Air temperature at CVS pump outlet (optional).	P_{TO}	°C	1.11 °C
Pump revolutions during test period	N	Revs	± 1 Rev.
Elapsed time for test period	t	s	± 0.5 s.

(5) After the system has been connected as shown in Figure 5 of appendix B of this subpart, set the variable restrictor in the wide open position and run the CVS pump for 20 minutes. Record the calibration data.

(6) Reset the restrictor valve to a more restricted condition in an increment of pump inlet depression that will yield a minimum of six data points for the total calibration. Allow the system to stabilize for 3 minutes and repeat the data acquisition.

(7) Data analysis:

(i) The air flow rate, Q_s, at each test point is calculated in standard cubic feet per minute 20 °C, 101.3 kPa from the flowmeter data using the manufacturer's prescribed method.

(ii) The air flow rate is then converted to pump flow, V_o, in cubic meter per revolution at absolute pump inlet temperature and pressure:

$$V_0 = \frac{Q_s}{n} \times \frac{T_P}{293} \times \frac{101.3kPa}{P_P}$$

Where:

V_O=Pump flow, m^3/rev at T_P, P_P,

Q_S=Meter air flow rate in standard cubic meters per minute, standard conditions are 20 °C, 101.3 kPa.

n=Pump speed in revolutions per minute.

T_p=Pump inlet temperature in Kelvin,=P_{TI}+273 [°K].

P_P=Absolute pump inlet pressure, kPa. =$P_P - P_{PI}$

Where:

P_P=barometric pressure, kPa.

P_{PI}=Pump inlet depression, kPa.

(iii) The correlation function at each test point is then calculated from the calibration data:

$$X_o = \frac{1}{n}\sqrt{\left(\frac{\Delta p}{P_e}\right)}$$

Where:

X_O=correlation function.

ΔP = The pressure differential from pump inlet to pump outlet, kPa. =$P_E - P_P$.

P_E=Absolute pump outlet pressure, [kPa]

=P_B+P_{PO}

Where:

P_{PO}=Pressure head at pump outlet, kPa (inches fluid).

(iv) A linear least squares fit is performed to generate the calibration equation which has the form:

$V_O = D_O - M(X_O)$

D_O and M are the intercept and slope constants, respectively, describing the regression line.

(8) A CVS system that has multiple speeds should be calibrated on each speed used. The calibration curves generated for the ranges will be approximately parallel and the intercept values, DO, will increase as the pump flow range decreases.

(9) If the calibration has been performed carefully, the calculated values from the equation will be within ± 0.50 percent of the measured value of V_O. Values of *M* will vary from one pump to another, but values of D_O for pumps of the same make, model and range should agree within ± three percent of each other. Calibrations should be performed at pump start-up and after major maintenance to assure the stability of the pump slip rate. Analysis of mass injection data will also reflect pump slip stability.

(d) CFV–CVS calibration. (1) Calibration of the CFV is based upon the flow equation for a critical venturi.

(i) Gas flow is a function of inlet pressure and temperature:

$$Q_s = \frac{K_v P}{\sqrt{T_K}}$$

Q_S=flow rate [m^3/min.].

K_V=calibration coefficient.

P=absolute pressure [kPa].

T_K=absolute temperature [°K].

(ii) The calibration procedure described in paragraph (d)(3) of this section establishes the value of the calibration coefficient at measured values of pressure, temperature and air flow.

(2) The manufacturer's recommended procedure shall be followed for calibrating electronic portions of the CFV.

(3) Measurements necessary for flow calibration are as follows:

CALIBRATION DATA MEASUREMENTS

Parameter	Symbol	Units	Tolerances
Barometric Pressure (corrected)	P_B	kPa	± 0.34 kPa
Air Temperature into flow meter	T_{EI}	°C	± 0.28 °C
Pressure drop between the inlet and throat of metering venturi.	P_{ED}	kPa	± 0.012 kPa
Air flow	Q_S	m^3/min.	± 0.5 percent of NIST value
CVS inlet depression	P_{PI}	kPa	± 0.055 kPa
Pressure head at CVS pump outlet	P_{PO}	kPa	± 0.055 kPa
Temperature at venturi inlet	T_V	°C	± 2.22 °C

(4) Set up equipment as shown in Figure 6 in appendix B of this subpart and eliminate leaks. (Leaks between the flow measuring devices and the critical

flow venturi will seriously affect the accuracy of the calibration.)

(5) Set the variable flow restrictor to the open position, start the blower, and allow the system to stabilize. Record data from all instruments.

(6) Vary the flow restrictor and make at least eight readings across the critical flow range of the venturi.

(7) Data analysis. The data recorded during the calibration are to be used in the following calculations:

(i) The air flow rate (designated as Q_s) at each test point is calculated in standard cubic feet per minute from the flow meter data using the manufacturer's prescribed method.

(ii) Calculate values of the calibration coefficient for each test point:

$$K_v = \frac{Q_s \sqrt{T_v}}{P_v}$$

Q_S=Flow rate in standard cubic meter per minute, at the standard conditions of 20 °C, 101.3 kPa.

T_V=Temperature at venturi inlet, °K.

P_V=Pressure at venturi inlet, kPA $=P_B - P_{PI}$

Where:

P_{PI} = Venturi inlet pressure depression, kPa.

(iii) Plot K_V as a function of venturi inlet pressure. For choked flow, K_V will have a relatively constant value. As pressure decreases (vacuum increases), the venturi becomes unchoked and K_V decreases. (See Figure 7 in appendix B of this subpart)

(iv) For a minimum of eight points in the critical region calculate an average K_V and the standard deviation.

(v) If the standard deviation exceeds 0.3 percent of the average K_V, take corrective action.

(e) CVS system verification. The following ''gravimetric'' technique can be used to verify that the CVS and analytical instruments can accurately measure a mass of gas that has been injected into the system. (Verification can also be accomplished by constant flow metering using critical flow orifice devices.)

(1) Obtain a small cylinder that has been charged with 99.5 percent or greater propane or carbon monoxide gas (CAUTION—carbon monoxide is poisonous).

(2) Determine a reference cylinder weight to the nearest 0.01 grams.

(3) Operate the CVS in the normal manner and release a quantity of pure propane into the system during the sampling period (approximately five minutes).

(4) The calculations are performed in the normal way except in the case of propane. The density of propane (0.6109 kg/m³carbon atom is used in place of the density of exhaust hydrocarbons.

(5) The gravimetric mass is subtracted from the CVS measured mass and then divided by the gravimetric mass to determine the percent accuracy of the system.

(6) Good engineering practice requires that the cause for any discrepancy greater than ± 2 percent must be found and corrected.

§ 91.425 CVS calibration frequency.

Calibrate the CVS positive displacement pump or critical flow venturi following initial installation, major maintenance or as necessary when indicated by the CVS system verification (described in § 91.424(e)).

§ 91.426 Dilute emission sampling calculations.

(a) The final reported emission test results must be computed by use of the following formula:

$$A_{wm} = \frac{\Sigma(W_i \times f_i)}{\Sigma(P_i \times f_i)} \times K_{Hi}$$

Where:

A_{wm}=Weighted mass emission level (HC, CO, CO_2, or NO_X) for a test [g/kW–hr].

W_i=Average mass flow rate of an emission from a test engine during mode i [g/hr].

WF_i = Weighting factor for each mode i as defined in § 91.410(a).

P_i = Gross average power generated during mode i [kW] calculated from the following equation (power for the idle mode shall always be zero for this calculation):

$$P_i = \frac{2\Pi}{60{,}000} \times \text{speed} \times \text{torque}$$

speed = average engine speed measured during mode i [rev./minute]

torque = average engine torque measured during mode i [N–m]

K_{Hi} = Humidity correction factor for mode i. This correction factor only affects calculations for NO_X and is equal to one for all other emissions. K_{Hi} is also equal to one for all two-stroke engines.

(b) The mass flow rate (W_i) of an emission for mode i is determined from the following equation:

$$W_i = Q_i \times D \times \left(C_{Di} - C_{Bi} \times \left(1 - \frac{1}{DF_i} \right) \right)$$

Where:

Q_i = Volumetric flow rate of the dilute exhaust through the CVS at standard conditions [m^3/hr at STP].

D = Density of a specific emission (D_{HC}, D_{CO}, D_{CO2}, D_{NOx}) in the exhaust [g/m^3].

DF_i = Dilution factor of the dilute exhaust during mode i.

C_{Di} = Concentration of the emission (HC, CO, NO_X) in the dilute exhaust extracted from the CVS during mode i [ppm].

C_{Bi} = Concentration of the emission (HC, CO, NO_X) in the background sample during mode i [ppm].

STP = Standard temperature and pressure. All volumetric calculations made for the equations in this section are to be corrected to a standard temperature of 20 °C and 101.3 kPa.

(c) Densities for emissions that are to be measured for this test procedure are:

D_{HC} = 576.8 g/m^3
DNO_X = 1912 g/m^3
D_{CO} = 1164 g/m^3
D_{CO2} = 1829 g/m^3

(1) The value of D_{HC} above is calculated based on the assumption that the fuel used has a carbon to hydrogen ratio of 1:1.85. For other fuels, D_{HC} can be calculated from the following formula:

$$D_{HC} = \frac{M_{HC}}{R_{STP}}$$

Where:

M_{HC} = Molecular weight of the hydrocarbon molecule divided by the number of carbon atoms in the molecule [g/mole].

R_{STP} = Ideal gas constant for a gas at STP = 0.024065 [m^3-mole].

(2) The idealized molecular weight of the exhaust hydrocarbons, ie., the molecular weight of the hydrocarbon molecule divided by the number of carbon atoms in the molecule, M_{HC} can be calculated from the following formula:

$$M_{HC} = M_C + \alpha M_H + \beta M_O$$

Where:

M_C = Molecular weight of carbon = 12.01 [g/mole].

M_H = Molecular weight of hydrogen = 1.008 [g/mole].

α = Hydrogen to carbon ratio of the test fuel.

(3) The value of D_{NOx} above assumes that NO_X in entirely in the form of NO_2.

(d) The dilution factor (DF) is the ratio of the volumetric flow rate of the background air to that of the raw engine exhaust. The following formula is used to determine DF:

$$DF = \frac{13.4}{C_{D_{HC}} + C_{D_{CO}} + C_{D_{CO_2}}}$$

Where:

$C_{D\ HC}$ = Concentration of HC in the dilute sample [ppm].

$C_{D\ CO}$ = Concentration of CO in the dilute sample [ppm].

$C_{D\ CO2}$ = Concentration of CO_2 in the dilute sample [ppm].

(e) The humidity correction factor K_H is an adjustment made to the measured NO_X. This corrects for the sensitivity that a spark-ignition engine has to the humidity of its combustion air. The following formula is used to determine K_H for NO_X calculations:

$$K_H = \frac{1}{1 - 0.0329(H - 10.71)}$$

Where:

H = Absolute humidity of the engine intake air [grams of water per kilogram of dry air].

(f) The absolute humidity of the engine intake air H is calculated using the following formula:

$$H = \frac{6.211\,P_{dew}}{P_B - \left(\frac{P_{dew}}{100}\right)}$$

Where:

P_{dew} = Saturated vapor pressure at the dew point temperature [kPa].

P_b = Barometric pressure [kPa].

(g) The fuel mass flow rate F_i can be either measured or calculated using the following formula:

$$F_i = \frac{M_f}{T}$$

Where:

M_f = Mass of fuel consumed by the engine during the mode [g].

T = Duration of the sampling period [hr].

(h) The mass of fuel consumed during the mode sampling period, M_{FUEL} can be calculated from the following equation:

$$M_f = \frac{G_S}{R_2 \times 273.15}$$

Where:

G_S = Mass of carbon measured during the mode sampling period [g].

R_2 = The fuel carbon weight fraction, which is the mass of carbon in fuel per mass of fuel [g/g].

(i) The grams of carbon measured during the mode G_S can be calculated from the following equation:

$$G_S = \frac{12.011 \times HC_{mass}}{12.011 + 1.008\alpha} + 0.429CO_{mass} + 0.273CO_{2\,mass}$$

Where:

HC_{mass} = mass of hydrocarbon emissions for the mode sampling period [g].

CO_{mass} = mass of carbon monoxide emissions for the mode sampling period [g].

$CO_{2\,mass}$ = mass of carbon dioxide emissions for the mode sampling period [g].

α = The atomic hydrogen to carbon ratio of the fuel.

§ 91.427 Catalyst thermal stress resistance evaluation.

(a)(1) The purpose of the evaluation procedure specified in this section is to determine the effect of thermal stress on catalyst conversion efficiency. The thermal stress is imposed on the test catalyst by exposing it to quiescent heated air in an oven. The evaluation of the effect of such stress on catalyst performance is based on the resultant degradation of the efficiency with which the conversions of specific pollutants are promoted. The application of this evaluation procedure involves the several steps that are described in the following paragraphs.

(2) The engine manufacturer need not submit catalyst conversion efficiency data for pollutants that the catalyst being tested was not designed to reduce/oxidize. The engine manufacturer must specify the pollutants that the catalyst will be converting and submit catalyst conversion efficiency data on only those pollutants.

(b) Determination of initial conversion efficiency.

(1) A synthetic exhaust gas mixture having the composition specified in § 91.329 is heated to a temperature of 450 ± 5 °C and passed through the new test catalyst or, optionally, a test catalyst that has been exposed to temperatures less than or equal to 500 °C for less than or equal to two hours, under flow conditions that are representative of anticipated in-use conditions.

(2) The concentration of each pollutant of interest, that is, hydrocarbons, carbon monoxide, or oxides of nitrogen, in the effluent of the catalyst is determined by means of the instrumentation that is specified for exhaust gas analysis in subpart D of this part.

(3) The conversion efficiency for each pollutant is determined by:

(i) Subtracting the effluent concentration from the initial concentration,

(ii) Dividing this result by the initial concentration,

(iii) Multiplying this result by 100 percent.

(c) Imposition of thermal stress.

(1) The catalyst is placed in an oven that has been pre-heated to 1000 °C and the temperature of the air in the oven is maintained at 1000 ± 10 °C for six hours. Optionally, the catalyst may instead be placed in an oven having a 90% nitrogen/10% water vapor environment that has been pre-heated to at least 850 °C and the temperature of the nitrogen/water vapor environment in the oven is maintained at 850 °C ± 10 °C for six hours.

(2) The catalyst is removed from the oven and allowed to cool to room temperature.

(d) Determination of final conversion efficiency. The steps listen in paragraph (b) of this section are repeated.

(e) Determination of conversion efficiency degradation.

(1) The final conversion efficiency determined in paragraph (c) of this section is subtracted from the initial conversion efficiency determined in paragraph (b) of this section.

(2) This result is divided by the initial conversion efficiency.

(3) This result is multiplied by 100 percent.

(f) Determination of compliance with degradation limit. The percent degradation determined in paragraph (e) of this section must not be greater than 20 percent.

APPENDIX A TO SUBPART E OF PART 91—TABLES

TABLE 1—PARAMETERS TO BE MEASURED OR CALCULATED AND RECORDED.

Parameter	Units
Airflow rate (dry), if applicable	g/h
Fuel flow rate	g/h
Engine speed	rpm
Engine torque output	N•m
Power output	kW
Air inlet temperature	°C
Air humidity	mg/kg
Coolant temperature (liquid cooled)	°C
Exhaust mixing chamber surface temperature, if applicable.	°C
Exhaust sample line temperature, if applicable	°C
Total accumulated hours of engine operation	h
Barometric pressure	kPa

TABLE 2.—TEST CYCLE AND WEIGHTING FACTORS FOR MARINE ENGINES

Mode No.	Engine speed as a percentage of engine rated speed	Engine torque as a percentage of maximum torque at rated speed	Mode weighting factor
1	100	100	0.06
2	80	71.6	0.14
3	60	46.5	0.15
4	40	25	0.25
5	idle	0	0.40

APPENDIX B TO SUBPART E OF PART 91—FIGURES

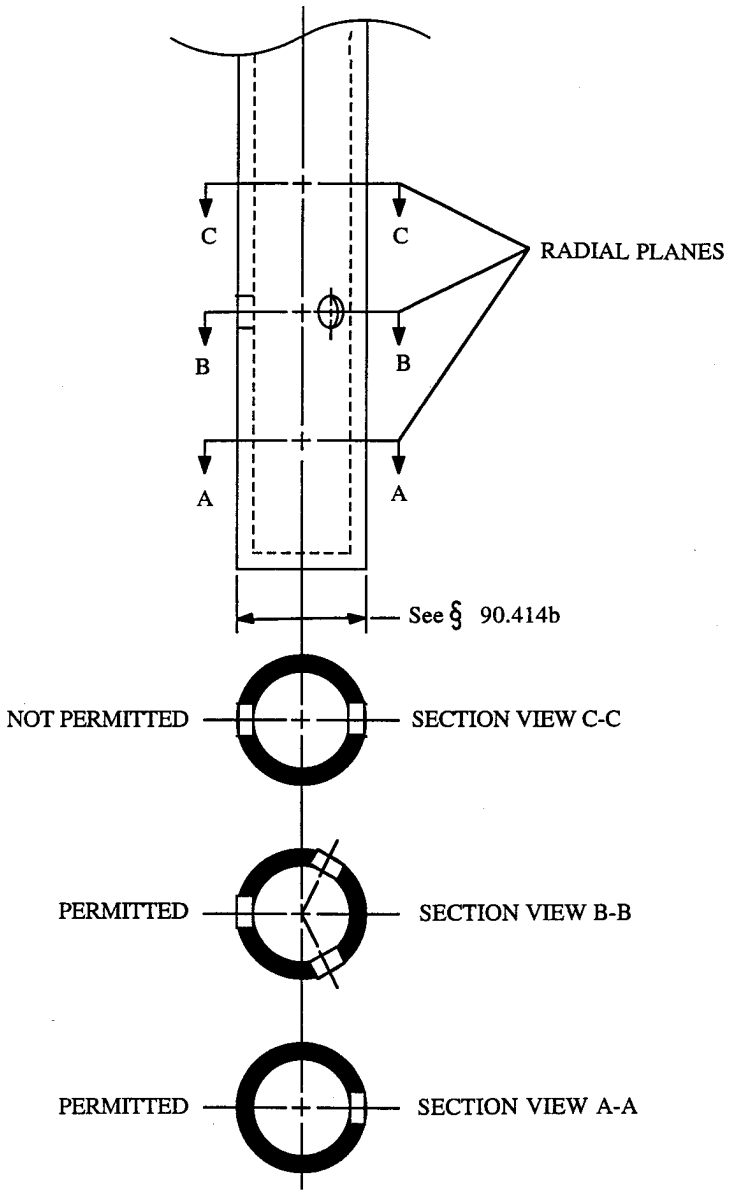

Figure 1.—Sample Probe and Typical Hole Spacings

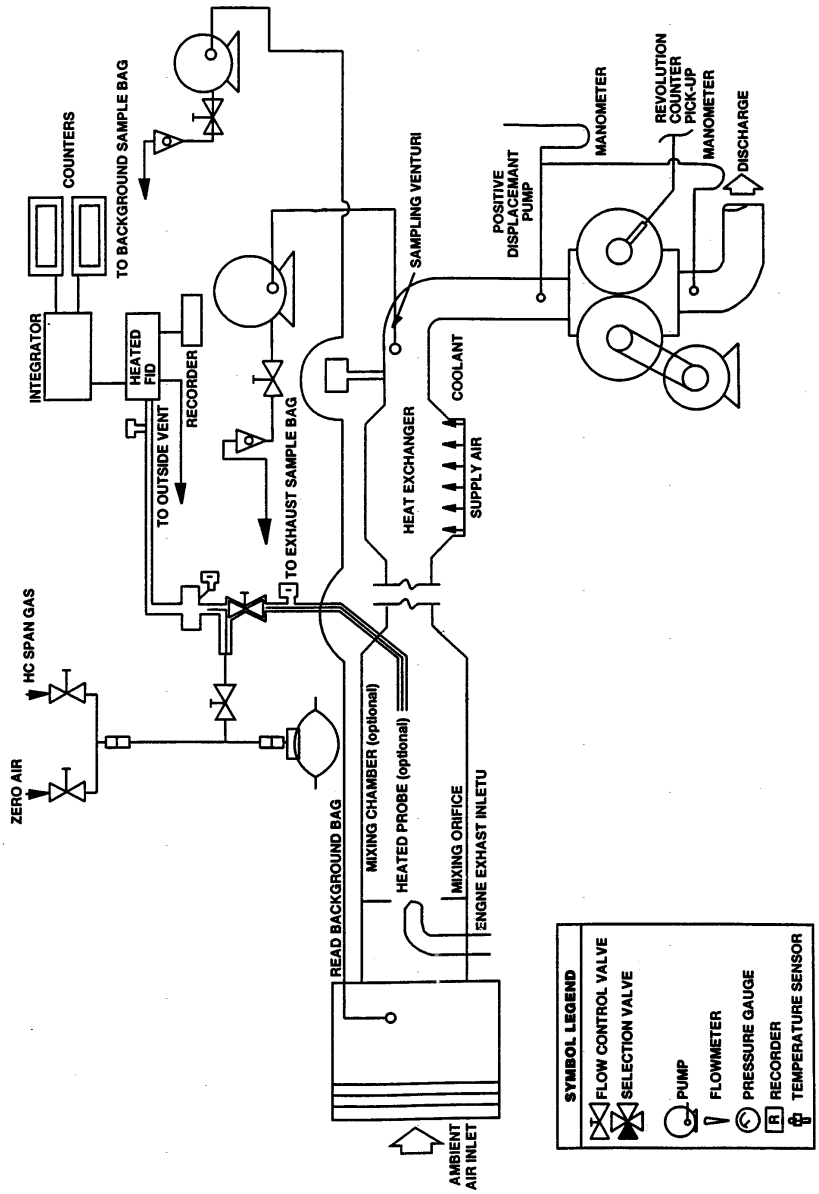

Figure 2 — Gaseous Emissions Sampling System (PDP-CVS) Showing both grab bag sampling and continous sampling

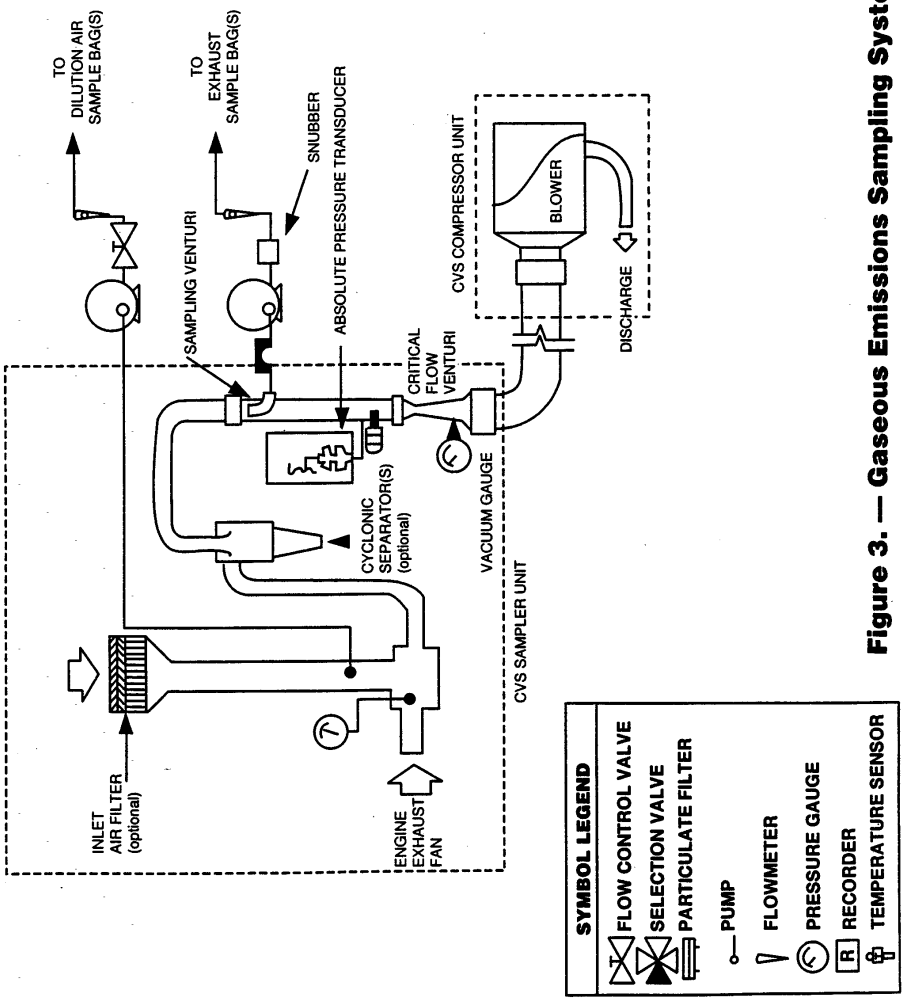

Figure 3. — Gaseous Emissions Sampling System (CVF-CVS)

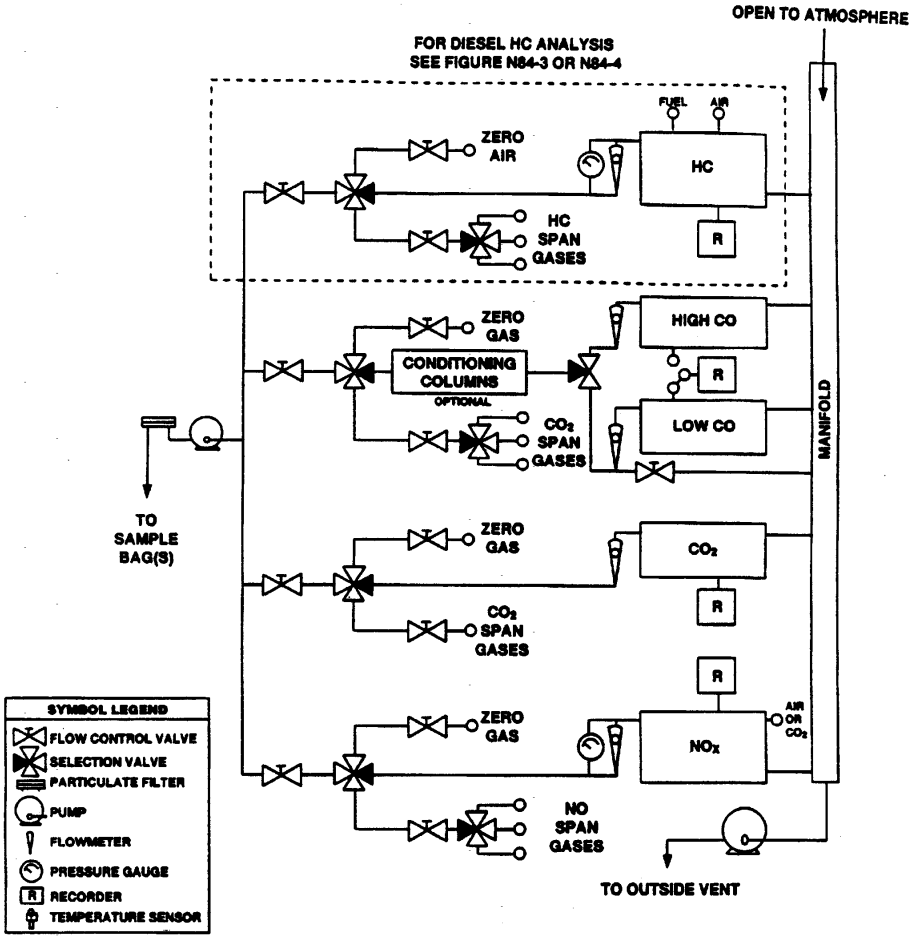

Figure 4. — Exhaust Gas Analytical System

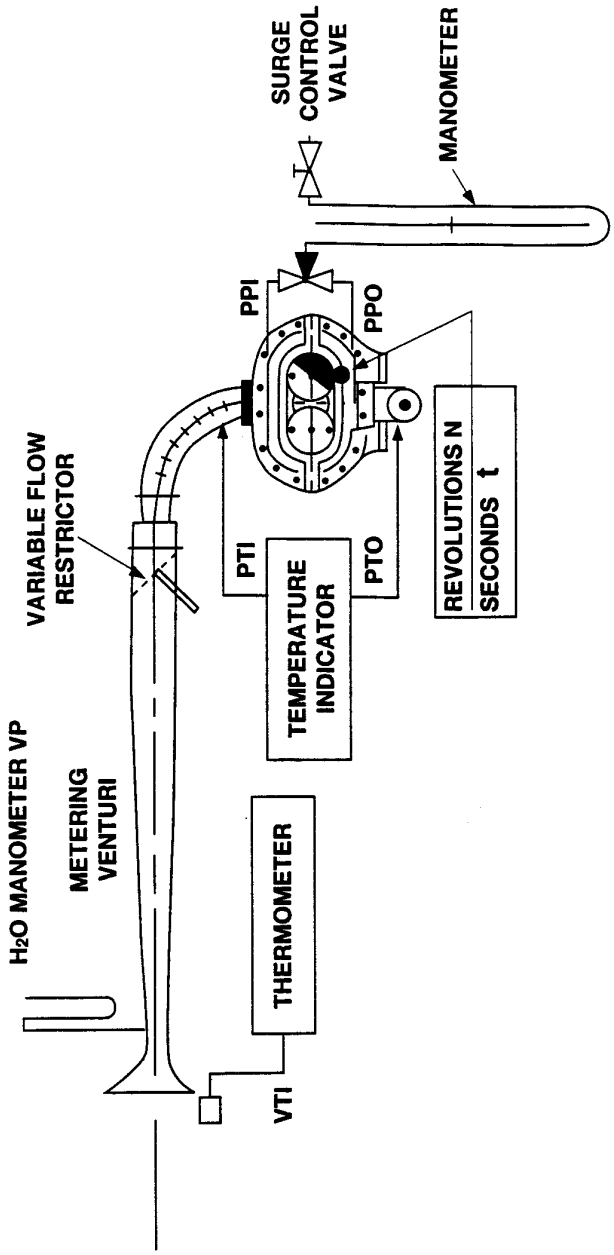

Figure 5. — PDP-CVS Calibration Configuration

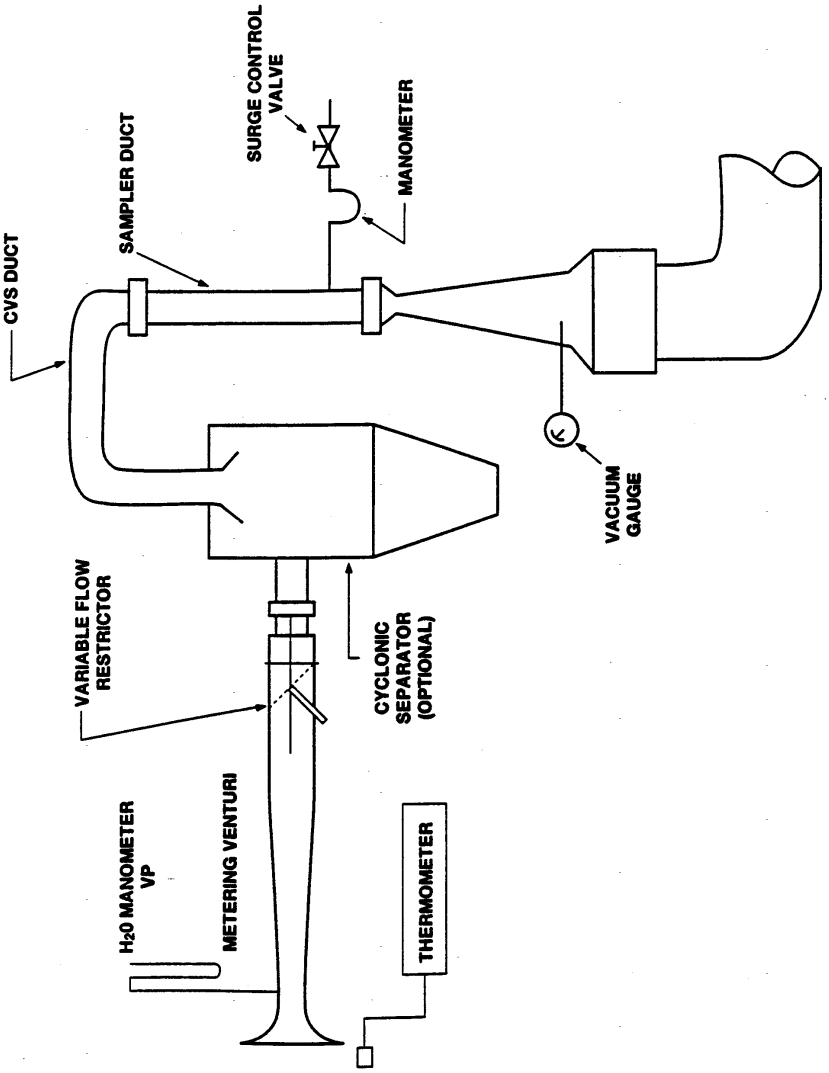

Figure 6. — CFV-CVS Calibration Configuration

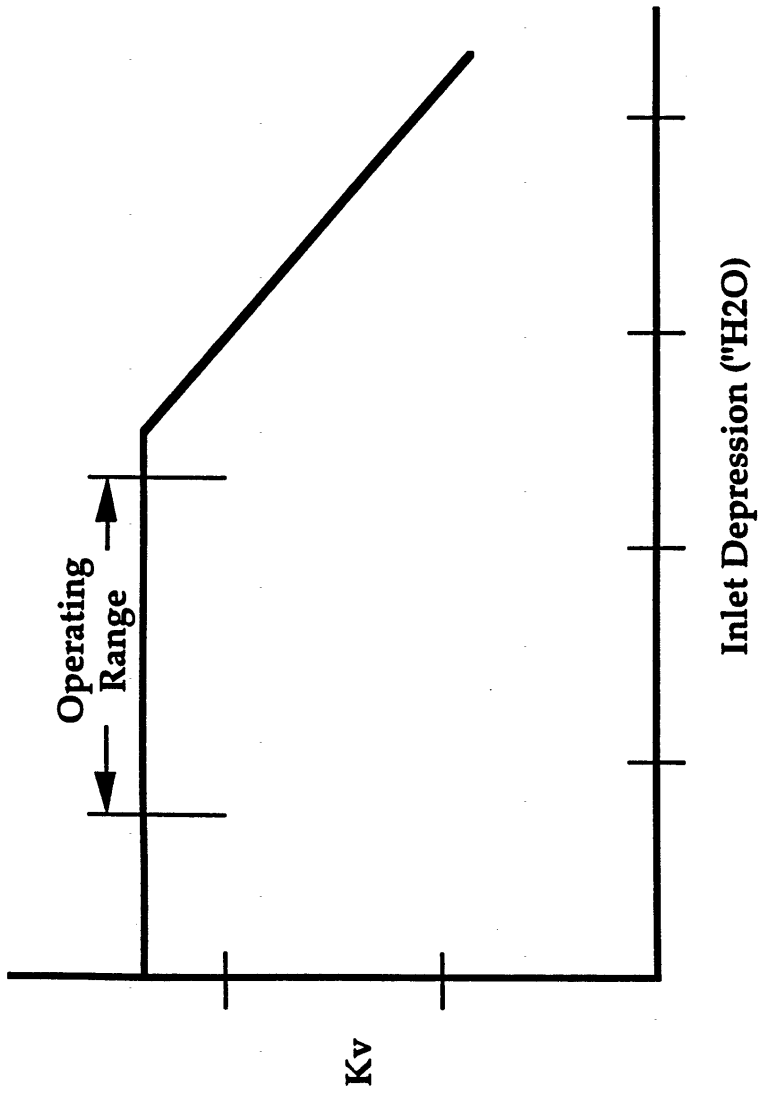

Figure 7.—Sonic Flow Choking

Subpart F—Manufacturer Production Line Testing Program

§91.501 Applicability.

(a) The requirements of this subpart F are applicable to all marine spark-ignition engines subject to the provisions of subpart A of this part 91.

(1) This subpart F applies to marine spark-ignition outboard engines beginning with model year 1999.

(2) This subpart F applies to marine spark-ignition personal watercraft engines beginning with model year 2000.

(b) The Administrator may waive the provisions of this subpart for a manufacturer or a specific engine family, as specified in paragraphs (b) (1), (2) and (3) of this section.

(1) The provisions of this subpart are waived for existing technology OB/PWC through model year 2003.

(2) Upon request by a manufacturer, the Administrator may waive the provisions of this subpart for existing technology OB/PWC for a specific engine family through model year 2005 if the Administrator determines that the engine family will be phased out of production for sale in the U.S. by the end of model year 2005. As a condition to receiving such a waiver for either model year 2004, 2005 or both, the manufacturer must discontinue production of engines for sale in the U.S. according to a schedule determined by the Administrator upon granting this waiver. Failure to do so by the manufacturer will void *ab initio* the applicable certificate of conformity.

(3) A manufacturer request under paragraph (b)(2) of this section must be in writing and apply to a specific engine family. The request must identify the engine family designation, a written rationale supporting the FEL choice, the type of information used as a basis for the FEL (e.g., previous emission tests, development tests), the specific source of the information including when the information was generated, the requested schedule for phasing the engine family out of production, and any other information the Administrator may require.

[61 FR 52102, Oct. 4, 1996, as amended at 62 FR 15808, Apr. 2, 1997]

§91.502 Definitions.

The definitions in subpart A of this part apply to this subpart. The following definitions also apply to this subpart.

Configuration means any subclassification of an engine family which can be described on the basis of gross power, emission control system, governed speed, injector size, engine calibration, and other parameters as designated by the Administrator.

Test sample means the collection of engines selected from the population of an engine family for emission testing.

§91.503 Production line testing by the manufacturer.

(a) Manufacturers of marine SI engines shall test production line engines from each engine family according to the provisions of this subpart.

(b) Production line engines must be tested using the test procedure specified in subpart E of this part that was used in certification unless an alternate procedure is approved by the Administrator. Any adjustable engine parameter must be set to values or positions that are within the range recommended to the ultimate purchaser, unless otherwise specified by the Administrator. The Administrator may specify values within or without the range recommended to the ultimate purchaser.

§91.504 Maintenance of records; submittal of information.

(a) The manufacturer of any new marine SI engine subject to any of the provisions of this subpart must establish, maintain, and retain the following adequately organized and indexed records:

(1) *General records.* A description of all equipment used to test engines in accordance with §91.503. Subpart D of this part sets forth relevant equipment requirements in §§91.306, 91.308, 91.309, and 91.313.

(2) *Individual records.* These records pertain to each production line test conducted pursuant to this subpart and include:

(i) The date, time, and location of each test;

(ii) The number of hours of service accumulated on the test engine when the test began and ended;

(iii) The names of all supervisory personnel involved in the conduct of the production line test;

(iv) A record and description of any adjustment, repair, preparation or modification performed prior to and/or subsequent to approval by the Administrator pursuant to §91.507(b)(1), giving the date, associated time, justification, name(s) of the authorizing personnel, and names of all supervisory personnel responsible for the conduct of the repair;

(v) If applicable, the date the engine was shipped from the assembly plant, associated storage facility or port facility, and the date the engine was received at the testing facility;

(vi) A complete record of all emission tests performed pursuant to this subpart (except tests performed directly by EPA), including all individual worksheets and/or other documentation relating to each test, or exact copies thereof, in accordance with the record requirements specified in §91.405.

(vii) A brief description of any significant events during testing not otherwise described under paragraph (a)(2) of this section, commencing with the test engine selection process and including such extraordinary events as engine damage during shipment.

(3) The manufacturer must establish, maintain and retain general records, pursuant to paragraph (a)(1) of this section, for each test cell that can be used to perform emission testing under this subpart.

(b) The manufacturer must retain all records required to be maintained under this subpart for a period of one year after completion of all testing required for the engine family in a model year. Records may be retained as hard copy (i.e., on paper) or reduced to microfilm, floppy disk, or some other method of data storage, depending upon the manufacturer's record retention procedure; provided, that in every case, all the information contained in the hard copy is retained.

(c) The manufacturer must, upon request by the Administrator, submit the following information with regard to engine production:

(1) Projected production or actual production for each engine configuration within each engine family for which certification has been requested and/or approved,

(2) Number of engines, by configuration and assembly plant, scheduled for production or actually produced.

(d) Nothing in this section limits the Administrator's discretion to require a manufacturer to establish, maintain, retain or submit to EPA information not specified by this section.

(e) All reports, submissions, notifications, and requests for approval made under this subpart must be addressed to: Manager, Engine Compliance Programs Group 6403J, U.S. Environmental Protection Agency, 401 M Street SW., Washington, DC 20460.

(f) The manufacturer must electronically submit the results of its production line testing using an EPA information format. The Administrator may exempt manufacturers from this requirement upon written request with supporting justification.

§91.505 Right of entry and access.

(a) To allow the Administrator to determine whether a manufacturer is complying with the provisions of this or other subparts of this part, one or more EPA enforcement officers may enter during operating hours and upon presentation of credentials any of the following places:

(1) Any facility, including ports of entry, where any engine to be introduced into commerce or any emission-related component is manufactured, assembled, or stored;

(2) Any facility where any test conducted pursuant to this or any other subpart or any procedure or activity connected with such test is or was performed;

(3) Any facility where any test engine is present; and

(4) Any facility where any record required under §91.504 or other document relating to this subpart or any other subpart of this part is located.

(b) Upon admission to any facility referred to in paragraph (a) of this section, EPA enforcement officers are authorized to perform the following inspection-related activities:

(1) To inspect and monitor any aspect of engine manufacture, assembly, storage, testing and other procedures, and to inspect and monitor the facilities in which these procedures are conducted;

(2) To inspect and monitor any aspect of engine test procedures or activities, including test engine selection, preparation and service accumulation, emission test cycles, and maintenance and verification of test equipment calibration;

(3) To inspect and make copies of any records or documents related to the assembly, storage, selection, and testing of an engine; and

(4) To inspect and photograph any part or aspect of any engine and any component used in the assembly thereof that is reasonably related to the purpose of the entry.

(c) EPA enforcement officers are authorized to obtain reasonable assistance without cost from those in charge of a facility to help the officers perform any function listed in this subpart and they are authorized to request the manufacturer to make arrangements with those in charge of a facility operated for the manufacturer's benefit to furnish reasonable assistance without cost to EPA.

(1) Reasonable assistance includes, but is not limited to, clerical, copying, interpretation and translation services; the making available on an EPA enforcement officer's request of personnel of the facility being inspected during their working hours to inform the EPA enforcement officer of how the facility operates and to answer the officer's questions; and the performance on request of emission tests on any engine which is being, has been, or will be used for production line or other testing.

(2) By written request, signed by the Assistant Administrator for Air and Radiation, and served on the manufacturer, a manufacturer may be compelled to cause the personal appearance of any employee at such a facility before an EPA enforcement officer. Any such employee who has been instructed by the manufacturer to appear will be entitled to be accompanied, represented, and advised by counsel.

(d) EPA enforcement officers are authorized to seek a warrant or court order authorizing the EPA enforcement officers to conduct the activities authorized in this section, as appropriate, to execute the functions specified in this section. EPA enforcement officers may proceed *ex parte* to obtain a warrant or court order whether or not the EPA enforcement officers first attempted to seek permission from the manufacturer or the party in charge of the facility(ies) in question to conduct the activities authorized in this section.

(e) A manufacturer must permit an EPA enforcement officer(s) who presents a warrant or court order to conduct the activities authorized in this section as described in the warrant or court order. The manufacturer must also cause those in charge of its facility or a facility operated for its benefit to permit entry and access as authorized in this section pursuant to a warrant or court order whether or not the manufacturer controls the facility. In the absence of a warrant or court order, an EPA enforcement officer(s) may conduct the activities authorized in this section only upon the consent of the manufacturer or the party in charge of the facility(ies) in question.

(f) It is not a violation of this part or the Clean Air Act for any person to refuse to permit an EPA enforcement officer(s) to conduct the activities authorized in this section if the officer(s) appears without a warrant or court order.

(g) A manufacturer is responsible for locating its foreign testing and manufacturing facilities in jurisdictions where local law does not prohibit an EPA enforcement officer(s) from conducting the entry and access activities specified in this section. EPA will not attempt to make any inspections which it has been informed local foreign law prohibits.

§91.506 Engine sample selection.

(a) At the start of each model year, the marine SI engine manufacturer will begin to randomly select engines from each engine family for production line testing at a rate of one percent. Each engine will be selected from the end of the assembly line.

(1) *For newly certified engine families:* After two engines are tested, the manufacturer will calculate the required sample size for the model year according to the Sample Size Equation in paragraph (b) of this section.

(2) *For carry-over engine families:* After one engine is tested, the manufacturer will combine the test with the last test result from the previous model year and then calculate the required sample size for the model year according to the Sample Size Equation in paragraph (b) of this section.

(b)(1) Manufacturers will calculate the required sample size for the model year for each engine family using the Sample Size Equation below. N is calculated from each test result. The number N indicates the number of tests required for the model year for an engine family. N, is recalculated after each test. Test results used to calculate the variables in the Sample Size Equation must be final deteriorated test results as specified in § 91.509(c).

$$N = \left[\frac{(t_{95} * \sigma)}{(x - FEL)} \right]^2 + 1$$

where:

N=required sample size for the model year.

t_{95}=95% confidence coefficient. It is dependent on the actual number of tests completed, n, as specified in the table in paragraph (b)(2) of this section. It defines one-tail, 95 percent confidence intervals.

σ=actual test sample standard deviation calculated from the following equation:

$$\sigma = \sqrt{\frac{\Sigma (X_i - x)^2}{n - 1}}$$

x_i=emission test result for an individual engine

x=mean of emission test results of the actual sample

FEL=Family Emission Limit

n=The actual number of tests completed in an engine family

(2) Actual Number of Tests (n) & 1-tail Confidence Coefficients (t_{95})

n	t_{95}	n	t_{95}	n	t_{95}
2	6.31	12	1.80	22	1.72
3	2.92	13	1.78	23	1.72
4	2.35	14	1.77	24	1.71
5	2.13	15	1.76	25	1.71
6	2.02	16	1.75	26	1.71
7	1.94	17	1.75	27	1.71
8	1.90	18	1.74	28	1.70
9	1.86	19	1.73	29	1.70
10	1.83	20	1.73	30	1.70
11	1.81	21	1.72	∞	1.645

(3) A manufacturer must distribute the testing of the remaining number of engines needed to meet the required sample size N, evenly throughout the remainder of the model year.

(4) After each new test, the required sample size, N, is recalculated using updated sample means, sample standard deviations and the appropriate 95% confidence coefficient.

(5) A manufacturer must continue testing and updating each engine family's sample size calculations according to paragraphs (b)(1) through (b)(4) of this section until a decision is made to stop testing as described in paragraph (b)(6) of this section or a noncompliance decision is made pursuant to § 91.510(b).

(6) If, at any time throughout the model year, the calculated required sample size, N, for an engine family is less than or equal to the actual sample size, n, and the sample mean, x, for $HC+NO_X$ is less than or equal to the FEL, the manufacturer may stop testing that engine family.

(7) If, at any time throughout the model year, the sample mean, x, for $HC+NO_X$ is greater than the FEL, the manufacturer must continue testing that engine family at the appropriate maximum sampling rate.

(8) The maximum required sample size for an engine family (regardless of the required sample size, N, as calculated in paragraph (b)(1) of this section) is the lesser of thirty tests per model year or one percent of projected annual production for that engine family for that model year.

(9) Manufacturers may elect to test additional randomly chosen engines. All additional randomly chosen engines tested in accordance with the testing procedures specified in § 91.507 must be included in the Sample Size and Cumulative Sum equation calculations as defined in paragraph (b)(1) of

this section and §91.508(a), respectively.

(c) The manufacturer must produce and assemble the test engines using its normal production and assembly process for engines to be distributed into commerce.

(d) No quality control, testing, or assembly procedures will be used on any test engine or any portion thereof, including parts and subassemblies, that have not been or will not be used during the production and assembly of all other engines of that family, unless the Administrator approves the modification in production or assembly procedures.

§91.507 Test procedures.

(a)(1) For marine SI engines subject to the provisions of this subpart, the prescribed test procedures are specified in subpart E of this part.

(2) The Administrator may, on the basis of a written application by a manufacturer, prescribe test procedures other than those specified in paragraph (a)(1) of this section for any marine engine he or she determines is not susceptible to satisfactory testing using procedures specified in paragraph (a)(1) of this section.

(b)(1) The manufacturer may not adjust, repair, prepare, or modify any test engine and may not perform any emission test on any test engine unless this adjustment, repair, preparation, modification and/or test is documented in the manufacturer's engine assembly and inspection procedures and is actually performed by the manufacturer or unless this adjustment, repair, preparation, modification and/or test is required or permitted under this subpart or is approved in advance by the Administrator.

(2) The Administrator may adjust or require to be adjusted any engine parameter which the Administrator has determined to be subject to adjustment for certification, production line testing and Selective Enforcement Audit testing, to any setting within the physically adjustable range of that parameter, as determined by the Administrator, prior to the performance of any test. However, if the idle speed parameter is one which the Administrator has determined to be subject to adjustment, the Administrator may not adjust it or require that it be adjusted to any setting which causes a lower engine idle speed than would have been possible within the physically adjustable range of the idle speed parameter if the manufacturer had accumulated 12 hours of service on the engine under paragraph (c) of this section, all other parameters being identically adjusted for the purpose of the comparison. The manufacturer may be requested to supply information necessary to establish an alternate minimum idle speed. The Administrator, in making or specifying these adjustments, may consider the effect of the deviation from the manufacturer's recommended setting on emission performance characteristics as well as the likelihood that similar settings will occur on in-use engines. In determining likelihood, the Administrator may consider factors such as, but not limited to, the effect of the adjustment on engine performance characteristics and information from similar in-use engines.

(c) Service accumulation. (1) Prior to performing exhaust emission production line testing, the manufacturer may accumulate on each test engine a number of hours of service equal to the greater of 12 hours or the number of hours the manufacturer accumulated during certification on the emission data engine for each engine family.

(2) Service accumulation must be performed in a manner using good engineering judgment to obtain emission results representative of production line engines.

(d) The manufacturer may not perform any maintenance on test engines after selection for testing.

(e) If an engine is shipped to a remote facility for production line testing, and an adjustment or repair is necessary because of shipment, the engine manufacturer must perform the necessary adjustment or repair only after the initial test of the engine, except in cases where the Administrator has determined that the test would be impossible or unsafe to perform or would permanently damage the engine. Engine manufacturers must report to the Administrator, in the quarterly report required by §91.509(e), all adjustments or

repairs performed on test engines prior to each test.

(f) If an engine cannot complete the service accumulation or an emission test because of a malfunction, the manufacturer may request that the Administrator authorize either the repair of that engine or its deletion from the test sequence.

(g) Testing. A manufacturer must test engines with the test procedure specified in subpart E of this part to demonstrate compliance with the applicable FEL. If alternate procedures were used in certification, then those alternate procedures must be used in production line testing.

(h) Retesting. (1) If an engine manufacturer reasonably determines that an emission test of an engine is invalid, the engine may be retested. Emission results from all tests must be reported to EPA. The engine manufacturer must also include a detailed explanation of the reasons for invalidating any test in the quarterly report required in § 91.509(e). In the event a retest is performed, a request may be made to the Administrator, within ten days of the end of the production quarter, for permission to substitute the after-repair test results for the original test results. The Administrator will either affirm or deny the request by the engine manufacturer within ten working days from receipt of the request.

§ 91.508 Cumulative Sum (CumSum) procedure.

(a) Manufacturers must construct the following CumSum Equation for $HC+NO_X$ for each engine family. Test results used to calculate the variables in the CumSum Equation must be final deteriorated test results as defined in § 91.509(c).

$C_i = max[0\ 0R\ (C_{i-1} + X_i - (FEL + F))]$

Where:

C_i = The current CumSum statistic

C_{i-1} = The previous CumSum statistic. Prior to any testing, the CumSum statistic = 0 (i.e. $C_0 = 0$)

X_i = The current emission test result for an individual engine

FEL = Family Emission Limit

$F = 0.25 \times \sigma$

After each test, C_i is compared to the action limit, H, the quantity which the CumSum statistic must exceed, in two consecutive tests, before the engine family may be determined to be in noncompliance for purposes of § 91.510.

H = The Action Limit. It is $5.0 \times \sigma$, and is a function of the standard deviation, σ.

σ = is the sample standard deviation and is recalculated after each test.

(b) After each engine is tested, the CumSum statistic shall be promptly updated according to the CumSum Equation in paragraph (a) of this section.

(c)(1) If, at any time during the model year, a manufacturer amends the application for certification for an engine family as specified in paragraph (a) of § 91.122 by performing an engine family modification (i.e. a change such as a running change involving a physical modification to an engine, a change in specification or setting, the addition of a new configuration, or the use of a different deterioration factor) with no changes to the FEL, all previous sample size and CumSum statistic calculations for the model year will remain unchanged.

(2) If, at any time during the model year, a manufacturer amends the application for certification for an engine family as specified in paragraph (a) of § 91.122 by modifying its FEL as a result of an engine family modification, the manufacturer must continue its calculations by inserting the new FEL into the sample size equation as specified in § 91.506(b)(1) and into the CumSum equation in paragraph (a) of this section. All previous calculations remain unchanged. If the sample size calculation indicates that additional tests are required, then those tests must be performed. The CumSum statistic recalculation must not indicate that the family has exceeded the action limit for two consecutive tests. The manufacturer's final credit report as required by § 91.210 must break out the credits that result from each FEL and corresponding CumSum analysis for each FEL set.

(3) If, at any time during the model year, a manufacturer amends the application for certification for an engine family as specified in paragraph (a) of § 91.122 by modifying its FEL without performing an engine modification, all

previous sample size and CumSum statistic calculations for the model year must be recalculated using the new FEL. If the sample size calculation indicates that additional tests are required, then those tests must be performed. The CumSum statistic recalculation must not indicate that the family has exceeded the action limit for two consecutive tests.

(4) If, at any time after the end of the model year but prior to the manufacturer's final credit report submittal as specified in §91.210, a manufacturer changes an FEL for an entire family, or for an affected part of the year's production, as specified in paragraph (a) of §91.122, in cases where there were one or more mid-year engine family modifications, all previous sample size and CumSum statistic calculations for the model year, or part of the model year affected by an engine family change, must be recalculated using the new FEL. The sample size equation must not indicate a larger number of tests than were appropriately performed using the previous FEL and the CumSum statistic recalculation must not exceed the action limit in two consecutive tests. The manufacturer's final credit report as required by §91.210 must break out the credits that result from each FEL and corresponding CumSum analysis for each FEL set.

§91.509 Calculation and reporting of test results.

(a) Initial test results are calculated following the applicable test procedure specified in paragraph (a) of §91.507. The manufacturer rounds these results, in accordance with ASTM E29–93a, to the number of decimal places contained in the applicable emission standard expressed to one additional significant figure. (ASTM E29–93a has been incorporated by reference. See §91.6.)

(b) Final test results are calculated by summing the initial test results derived in paragraph (a) of this section for each test engine, dividing by the number of tests conducted on the engine, and rounding in accordance with ASTM E29–93a to the same number of decimal places contained in the applicable standard expressed to one additional significant figure.

(c) The final deteriorated test results for each test engine are calculated by applying the appropriate deterioration factors, derived in the certification process for the engine family, to the final test results, and rounding in accordance with ASTM E29–93a to the same number of decimal places contained in the applicable standard expressed to one additional significant figure.

(d) If, at any time during the model year, the CumSum statistic exceeds the applicable action limit, H, in two consecutive tests, the engine family may be determined to be in noncompliance and the manufacturer must notify EPA within two working days of such exceedance by the CumSum statistic.

(e) Within 30 calendar days of the end of each quarter, each engine manufacturer must submit to the Administrator a report which includes the following information:

(1) The location and description of the manufacturer's or other's exhaust emission test facilities which were utilized to conduct testing reported pursuant to this section;

(2) Total production and sample sizes, N and n, for each engine family;

(3) The FEL against which each engine family was tested;

(4) A description of the process to obtain engines on a random basis;

(5) A description of the test engines;

(6) For each test conducted,

(i) A description of the test engine, including:

(A) Configuration and engine family identification,

(B) Year, make, and build date,

(C) Engine identification number, and

(D) Number of hours of service accumulated on engine prior to testing;

(ii) Location where service accumulation was conducted and description of accumulation procedure and schedule;

(iii) Test number, date, test procedure used, initial test results before and after rounding, and final test results for all exhaust emission tests, whether valid or invalid, and the reason for invalidation, if applicable;

(iv) A complete description of any adjustment, modification, repair, preparation, maintenance, and/or testing

which was performed on the test engine, was not reported pursuant to any other paragraph of this subpart, and will not be performed on all other production engines;

(v) A CumSum analysis, as required in § 91.508, of the production line test results for each engine family;

(vi) Any other information the Administrator may request relevant to the determination whether the new engines being manufactured by the manufacturer do in fact conform with the regulations with respect to which the certificate of conformity was issued;

(7) For each failed engine as defined in § 91.510(a), a description of the remedy and test results for all retests as required by § 91.511(g);

(8) The date of the end of the engine manufacturer's model year production for each engine family; and

(9) The following signed statement and endorsement by an authorized representative of the manufacturer:

This report is submitted pursuant to sections 213 and 208 of the Clean Air Act. This production line testing program was conducted in complete conformance with all applicable regulations under 40 CFR part 91 *et seq.* No emission-related changes to production processes or quality control procedures for the engine family tested have been made during this production line testing program that affect engines from the production line. All data and information reported herein is, to the best of (Company Name) knowledge, true and accurate. I am aware of the penalties associated with violations of the Clean Air Act and the regulations thereunder. (Authorized Company Representative.)

§ 91.510 Compliance with criteria for production line testing.

(a) A failed engine is one whose final deteriorated test results pursuant to § 91.509(c), for HC + NO_X exceeds the applicable Family Emission Limit (FEL).

(b) An engine family may be determined to be in noncompliance, if at any time throughout the model year, the CumSum statistic, C_i, for HC+NO_X, is greater than the action limit, H, for two consecutive tests.

§ 91.511 Suspension and revocation of certificates of conformity.

(a) The certificate of conformity is automatically suspended with respect to any engine failing pursuant to paragraph (a) of § 91.510 effective from the time that testing of that engine is completed.

(b) The Administrator may suspend the certificate of conformity for an engine family which is determined to be in noncompliance pursuant to § 90.510(b). This suspension will not occur before fifteen days after the engine family is determined to be in noncompliance.

(c) If the results of testing pursuant to these regulations indicate that engines of a particular family produced at one plant of a manufacturer do not conform to the regulations with respect to which the certificate of conformity was issued, the Administrator may suspend the certificate of conformity with respect to that family for engines manufactured by the manufacturer at all other plants.

(d) Notwithstanding the fact that engines described in the application for certification may be covered by a certificate of conformity, the Administrator may suspend such certificate immediately in whole or in part if the Administrator finds any one of the following infractions to be substantial:

(1) The manufacturer refuses to comply with any of the requirements of this subpart.

(2) The manufacturer submits false or incomplete information in any report or information provided to the Administrator under this subpart.

(3) The manufacturer renders inaccurate any test data submitted under this subpart.

(4) An EPA enforcement officer is denied the opportunity to conduct activities authorized in this subpart and a warrant or court order is presented to the manufacturer or the party in charge of the facility in question.

(5) An EPA enforcement officer is unable to conduct activities authorized in § 91.505 because a manufacturer has located its facility in a foreign jurisdiction where local law prohibits those activities.

(e) The Administrator shall notify the manufacturer in writing of any suspension or revocation of a certificate of conformity in whole or in part. A suspension or revocation is effective upon receipt of the notification or fifteen days from the time an engine family is

determined to be in noncompliance pursuant to §91.510(b), whichever is later, except that the certificate is immediately suspended with respect to any failed engines as provided for in paragraph (a) of this section.

(f) The Administrator may revoke a certificate of conformity for an engine family after the certificate has been suspended pursuant to paragraph (b) or (c) of this section if the proposed remedy for the nonconformity, as reported by the manufacturer to the Administrator, is one requiring a design change or changes to the engine and/or emission control system as described in the application for certification of the affected engine family.

(g) Once a certificate has been suspended for a failed engine, as provided for in paragraph (a) of this section, the manufacturer must take the following actions before the certificate is reinstated for that failed engine:

(1) Remedy the nonconformity;

(2) Demonstrate that the engine conforms to the Family Emission Limit by retesting the engine in accordance with these regulations; and

(3) Submit a written report to the Administrator, after successful completion of testing on the failed engine, which contains a description of the remedy and test results for each engine in addition to other information that may be required by this part.

(h) Once a certificate for a failed engine family has been suspended pursuant to paragraph (b), (c) or (d) of this section, the manufacturer must take the following actions before the Administrator will consider reinstating the certificate:

(1) Submit a written report to the Administrator which identifies the reason for the noncompliance of the engines, describes the proposed remedy, including a description of any proposed quality control and/or quality assurance measures to be taken by the manufacturer to prevent future occurrences of the problem, and states the date on which the remedies will be implemented.

(2) Demonstrate that the engine family for which the certificate of conformity has been suspended does in fact comply with the regulations of this part by testing as many engines as needed so that the CumSum statistic, as calculated in §91.508(a), falls below the action limit. Such testing must comply with the provisions of this part. If the manufacturer elects to continue testing individual engines after suspension of a certificate, the certificate is reinstated for any engine actually determined to be in conformance with the Family Emission Limits through testing in accordance with the applicable test procedures, provided that the Administrator has not revoked the certificate pursuant to paragraph (f) of this section.

(i) Once the certificate has been revoked for an engine family, if the manufacturer desires to continue introduction into commerce of a modified version of that family, the following actions must be taken before the Administrator may issue a certificate for that modified family:

(1) If the Administrator determines that the proposed change(s) in engine design may have an effect on emission performance deterioration, the Administrator shall notify the manufacturer, within five working days after receipt of the report in paragraph (h)(1) of this section, whether subsequent testing under this subpart will be sufficient to evaluate the proposed change or changes or whether additional testing will be required; and

(2) After implementing the change or changes intended to remedy the nonconformity, the manufacturer must demonstrate that the modified engine family does in fact conform with the regulations of this part by testing as many engines as needed from the modified engine family so that the CumSum statistic, as calculated in §91.508(a) using the newly assigned FEL if applicable, falls below the action limit. When both of these requirements are met, the Administrator shall reissue the certificate or issue a new certificate, as the case may be, to include that family. As long as the CumSum statistic remains above the action limit, the revocation remains in effect.

(j) At any time subsequent to a suspension of a certificate of conformity for a test engine pursuant to paragraph (a) of this section, but not later than 15 days (or such other period as may be

allowed by the Administrator) after notification of the Administrator's decision to suspend or revoke a certificate of conformity in whole or in part pursuant to paragraphs (b), (c), or (f) of this section, a manufacturer may request a hearing as to whether the tests have been properly conducted or any sampling methods have been properly applied.

(k) Any suspension of a certificate of conformity under paragraph (d) of this section:

(1) Shall be made only after the manufacturer concerned has been offered an opportunity for a hearing conducted in accordance with §§91.512, 91.513, and 91.514 and

(2) Need not apply to engines no longer in the possession of the manufacturer.

(l) After the Administrator suspends or revokes a certificate of conformity pursuant to this section and prior to the commencement of a hearing under §91.512, if the manufacturer demonstrates to the Administrator's satisfaction that the decision to suspend or revoke the certificate was based on erroneous information, the Administrator shall reinstate the certificate.

(m) To permit a manufacturer to avoid storing non-test engines while conducting subsequent testing of the noncomplying family, a manufacturer may request that the Administrator conditionally reinstate the certificate for that family. The Administrator may reinstate the certificate subject to the following condition: the manufacturer must commit to recall all engines of that family produced from the time the certificate is conditionally reinstated if the CumSum statistic does not fall below the action limit and must commit to remedy any nonconformity at no expense to the owner.

§91.512 Request for public hearing.

(a) If the manufacturer disagrees with the Administrator's decision to suspend or revoke a certificate or disputes the basis for an automatic suspension pursuant to §91.511(a), the manufacturer may request a public hearing.

(b) The manufacturer's request shall be filed with the Administrator not later than 15 days after the Administrator's notification of his or her decision to suspend or revoke, unless otherwise specified by the Administrator. The manufacturer shall simultaneously serve two copies of this request upon the Manager of the Engine Compliance Programs Group and file two copies with the Hearing Clerk for the Agency. Failure of the manufacturer to request a hearing within the time provided constitutes a waiver of the right to a hearing. Subsequent to the expiration of the period for requesting a hearing as of right, the Administrator may, in his or her discretion and for good cause shown, grant the manufacturer a hearing to contest the suspension or revocation.

(c) A manufacturer shall include in the request for a public hearing:

(1) A statement as to which engine configuration(s) within a family is to be the subject of the hearing;

(2) A concise statement of the issues to be raised by the manufacturer at the hearing, except that in the case of the hearing requested under §91.511(j), the hearing is restricted to the following issues:

(i) Whether tests have been properly conducted (specifically, whether the tests were conducted in accordance with applicable regulations under this part and whether test equipment was properly calibrated and functioning);

(ii) Whether sampling plans and statistical analyses have been properly applied (specifically, whether sampling procedures and statistical analyses specified in this subpart were followed and whether there exists a basis for distinguishing engines produced at plants other than the one from which engines were selected for testing which would invalidate the Administrator's decision under §91.511(c));

(3) A statement specifying reasons why the manufacturer believes it will prevail on the merits of each of the issues raised; and

(4) A summary of the evidence which supports the manufacturer's position on each of the issues raised.

(d) A copy of all requests for public hearings will be kept on file in the Office of the Hearing Clerk and will be made available to the public during Agency business hours.

§91.513 Administrative procedures for public hearing.

(a) The Presiding Officer shall be an Administrative Law Judge appointed pursuant to 5 U.S.C. 3105 (see also 5 CFR part 930 as amended).

(b) The Judicial Officer shall be an officer or employee of the Agency appointed as a Judicial Officer by the Administrator, pursuant to this section, who shall meet the qualifications and perform functions as follows:

(1) *Qualifications.* A Judicial Officer may be a permanent or temporary employee of the Agency who performs other duties for the Agency. The Judicial Officer shall not be employed by the Office of Enforcement and Compliance Assurance or have any connection with the preparation or presentation of evidence for a hearing held pursuant to this subpart. The Judicial Officer shall be a graduate of an accredited law school and a member in good standing of a recognized Bar Association of any state or the District of Columbia.

(2) *Functions.* The Administrator may consult with the Judicial Officer or delegate all or part of the Administrator's authority to act in a given case under this section to a Judicial Officer, provided that this delegation does not preclude the Judicial Officer from referring any motion or case to the Administrator when the Judicial Officer determines such referral to be appropriate.

(c) For the purposes of this section, one or more Judicial Officers may be designated by the Administrator. As work requires, a Judicial Officer may be designated to act for the purposes of a particular case.

(d) Summary decision. (1) In the case of a hearing requested under §91.511(j), when it clearly appears from the data and other information contained in the request for a hearing that no genuine and substantial question of fact or law exists with respect to the issues specified in §91.512(c)(2), the Administrator may enter an order denying the request for a hearing and reaffirming the original decision to suspend or revoke a certificate of conformity.

(2) In the case of a hearing requested under §91.512 to challenge a suspension of a certificate of conformity for the reason(s) specified in §91.511(d), when it clearly appears from the data and other information contained in the request for the hearing that no genuine and substantial question of fact or law exists with respect to the issue of whether the refusal to comply with this subpart was caused by conditions and circumstances outside the control of the manufacturer, the Administrator may enter an order denying the request for a hearing and suspending the certificate of conformity.

(3) Any order issued under paragraph (d)(1) or (d)(2) of this section has the force and effect of a final decision of the Administrator, as issued pursuant to §91.515.

(4) If the Administrator determines that a genuine and substantial question of fact or law does exist with respect to any of the issues referred to in paragraphs (d)(1) and (d)(2) of this section, the Administrator shall grant the request for a hearing and publish a notice of public hearing in the FEDERAL REGISTER or by such other means as the Administrator finds appropriate to provide notice to the public.

(e) Filing and service. (1) An original and two copies of all documents or papers required or permitted to be filed pursuant to this section and §91.512(c) must be filed with the Hearing Clerk of the Agency. Filing is considered timely if mailed, as determined by the postmark, to the Hearing Clerk within the time allowed by this section and §91.512(b). If filing is to be accomplished by mailing, the documents must be sent to the address set forth in the notice of public hearing referred to in paragraph (d)(4) of this section.

(2) To the maximum extent possible, testimony will be presented in written form. Copies of written testimony will be served upon all parties as soon as practicable prior to the start of the hearing. A certificate of service will be provided on or accompany each document or paper filed with the Hearing Clerk. Documents to be served upon the Manager of the Engine Compliance Programs Group must be sent by registered mail to: Manager, Engine Compliance Programs Group 6403–J, U.S. Environmental Protection Agency, 401 M Street SW., Washington, DC 20460. Service by registered mail is complete upon mailing.

(f) Computation of time. (1) In computing any period of time prescribed or allowed by this section, except as otherwise provided, the day of the act or event from which the designated period of time begins to run is not included. Saturdays, Sundays, and federal legal holidays are included in computing the period allowed for the filing of any document or paper, except that when the period expires on a Saturday, Sunday, or federal legal holiday, the period is extended to include the next following business day.

(2) A prescribed period of time within which a party is required or permitted to do an act is computed from the time of service, except that when service is accomplished by mail, three days will be added to the prescribed period.

(g) Consolidation. The Administrator or the Presiding Officer in his or her discretion may consolidate two or more proceedings to be held under this section for the purpose of resolving one or more issues whenever it appears that consolidation will expedite or simplify consideration of these issues. Consolidation does not affect the right of any party to raise issues that could have been raised if consolidation had not occurred.

(h) Hearing date. To the extent possible hearings under § 91.512 will be scheduled to commence within 14 days of receipt of the request for a hearing.

§ 91.514 Hearing procedures.

The procedures provided in § 86.1014–84(i) to (s) apply for hearings requested pursuant to § 91.512 regarding suspension, revocation, or voiding of a certificate of conformity.

§ 91.515 Appeal of hearing decision.

The procedures provided in § 86.1014–84(t) to (aa) apply for appeals filed with respect to hearings held pursuant to § 91.514.

§ 91.516 Treatment of confidential information.

Except for information required by § 91.509(e)(2) and § 91.509 (e)(6)(vi), information submitted to EPA pursuant to § 91.509(e) shall be made available to the public upon request by EPA notwithstanding any claim of confidentiality made by the submitter. The provisions for treatment of confidential information described in § 91.7 apply to the information required by § 91.509(e)(2) and all other information submitted pursuant to this subpart.

Subpart G—Selective Enforcement Auditing Regulations

§ 91.601 Applicability.

The requirements of subpart G are applicable to all marine SI engines subject to the provisions of subpart A of part 91.

§ 91.602 Definitions.

The definitions in subpart A and subpart F of this part apply to this subpart. The following definitions also apply to this subpart.

Acceptable quality level (AQL) means the maximum percentage of failing engines that can be considered a satisfactory process average for sampling inspections.

Inspection criteria means the pass and fail numbers associated with a particular sampling plan.

§ 91.603 Applicability of part 91, subpart F.

(a) For purposes of selective enforcement audits conducted under this subpart, marine SI engines subject to provisions of subpart B of this part are subject to regulations specified in subpart F of this part, except:

(1) Section 91.501 does not apply.

(2) Section 91.503 does not apply. See § 91.605.

(3) Section 91.506 does not apply. See § 91.606.

(4) Section 91.507 does not apply. See § 91.607.

(5) Section 91.508 does not apply.

(6) Paragraphs (d) and (e)(6)(v) and references to ''sample sizes, N and n'' of § 91.509 do not apply.

(7) The introductory text in § 91.509 does not apply. The following text applies:

''Within 5 working days after completion of testing of all engines pursuant to a test order.''

(8) The introductory text of § 91.509(e)(9) does not apply. The following text applies:

The following signed statement and endorsement by an authorized representative of the manufacturer:

This report is submitted pursuant to Sections 213 and 208 of the Clean Air Act. This Selective Enforcement Audit was conducted in complete conformance with all applicable regulations under 40 CFR Part 91 *et seq* and the conditions of the test order. No emission-related changes to production processes or quality control procedures for the engine family tested have been made between receipt of the test order and conclusion of the audit. All data and information reported herein is, to the best of (Company Name) knowledge, true and accurate. I am aware of the penalties associated with violations of the Clean Air Act and the regulations thereunder. (Authorized Company Representative.)

(9) Section 91.510 does not apply. See §91.608.

§91.604 Test orders.

(a) A test order addressed to the manufacturer is required for any testing under this subpart.

(b) The test order is signed by the Assistant Administrator for Air and Radiation or his or her designee. The test order must be delivered in person by an EPA enforcement officer or EPA authorized representative to a company representative or sent by registered mail, return receipt requested, to the manufacturer's representative who signed the application for certification submitted by the manufacturer, pursuant to the requirements of the applicable section of subpart B of this part. Upon receipt of a test order, the manufacturer must comply with all of the provisions of this subpart and instructions in the test order.

(c) *Information included in test order.* (1) The test order will specify the engine family to be selected for testing, the manufacturer's engine assembly plant or associated storage facility or port facility (for imported engines) from which the engines must be selected, the time and location at which engines must be selected, and the procedure by which engines of the specified family must be selected. The test order may specify the configuration to be audited and/or the number of engines to be selected per day. Engine manufacturers are required to select a minimum of four engines per day unless an alternate selection procedure is approved pursuant to §91.606(a), or unless total production of the specified configuration is less than four engines per day. If total production of the specified configuration is less than four engines per day, the manufacturer selects the actual number of engines produced per day.

(2) The test order may include alternate families to be selected for testing at the Administrator's discretion in the event that engines of the specified family are not available for testing because those engines are not being manufactured during the specified time or are not being stored at the specified assembly plant, associated storage facilities, or port of entry.

(3) If the specified family is not being manufactured at a rate of at least two engines per day in the case of manufacturers specified in 40 CFR 89.607(g)(1), or one engine per day in the case of manufacturers specified in 40 CFR 89.607(g)(2), over the expected duration of the audit, the Assistant Administrator or her or his designated representative may select engines of the alternate family for testing.

(4) In addition, the test order may include other directions or information essential to the administration of the required testing.

(d) A manufacturer may submit a list of engine families and the corresponding assembly plants, associated storage facilities, or (in the case of imported engines) port facilities from which the manufacturer prefers to have engines selected for testing in response to a test order. In order that a manufacturer's preferred location be considered for inclusion in a test order for a particular engine family, the list must be submitted prior to issuance of the test order. Notwithstanding the fact that a manufacturer has submitted the list, the Administrator may order selection at other than a preferred location.

(e) Upon receipt of a test order, a manufacturer must proceed in accordance with the provisions of this subpart.

§91.605 Testing by the Administrator.

(a) The Administrator may require by test order under §91.604 that engines of a specified family be selected in a

manner consistent with the requirements of § 91.606 and submitted to the Administrator at the place designated for the purpose of conducting emission tests. These tests will be conducted in accordance with § 91.607 to determine whether engines manufactured by the manufacturer conform with the regulations with respect to which the certificate of conformity was issued.

(b) *Designating official data.* (1) Whenever the Administrator conducts a test on a test engine or the Administrator and manufacturer each conduct a test on the same test engine, the results of the Administrator's test comprise the official data for that engine.

(2) Whenever the manufacturer conducts all tests on a test engine, the manufacturer's test data is accepted as the official data, provided that if the Administrator makes a determination based on testing conducted under paragraph (a) of this section that there is a substantial lack of agreement between the manufacturer's test results and the Administrator's test results, no manufacturer's test data from the manufacturer's test facility will be accepted for purposes of this subpart.

(c) If testing conducted under § 91.604 is unacceptable under paragraph (b)(2) of this section, the Administrator must:

(1) Notify the manufacturer in writing of the Administrator's determination that the test facility is inappropriate for conducting the tests required by this subpart and the reasons therefor; and

(2) Reinstate any manufacturer's data upon a showing by the manufacturer that the data acquired under § 91.604 was erroneous and the manufacturer's data was correct.

(d) The manufacturer may request in writing that the Administrator reconsider the determination in paragraph (b)(2) of this section based on data or information which indicates that changes have been made to the test facility and these changes have resolved the reasons for disqualification.

§ 91.606 Sample selection.

(a) Engines comprising a test sample will be selected at the location and in the manner specified in the test order. If a manufacturer determines that the test engines cannot be selected in the manner specified in the test order, an alternative selection procedure may be employed, provided the manufacturer requests approval of the alternative procedure prior to the start of test sample selection, and the Administrator approves the procedure.

(b) The manufacturer must produce and assemble the test engines of the family selected for testing using its normal production and assembly process for engines to be distributed into commerce. If, between the time the manufacturer is notified of a test order and the time the manufacturer finishes selecting test engines, the manufacturer implements any change(s) in its production or assembly processes, including quality control, which may reasonably be expected to affect the emissions of the engines selected, then the manufacturer must, during the audit, inform the Administrator of such changes. If the test engines are selected at a location where they do not have their operational and emission control systems installed, the test order will specify the manner and location for selection of components to complete assembly of the engines. The manufacturer must assemble these components onto the test engines using normal assembly and quality control procedures as documented by the manufacturer.

(c) No quality control, testing, or assembly procedures will be used on the test engine or any portion thereof, including parts and subassemblies, that have not been or will not be used during the production and assembly of all other engines of that family, unless the Administrator approves the modification in production or assembly procedures pursuant to paragraph (b) of this section.

(d) The test order may specify that an EPA enforcement officer(s) or authorized representative(s), rather than the manufacturer, select the test engines according to the method specified in the test order.

(e) The order in which test engines are selected determines the order in which test results are to be used in applying the sampling plan in accordance with § 91.608.

(f) The manufacturer must keep on hand all untested engines, if any, comprising the test sample until a pass or fail decision is reached in accordance with §91.608(e). The manufacturer may ship any tested engine which has not failed the requirements as set forth in §91.608(b). However, once the manufacturer ships any test engine, it relinquishes the prerogative to conduct retests as provided in §91.607(i).

§91.607 Test procedures.

(a)(1) For marine SI engines subject to the provisions of this subpart, the prescribed test procedures are the test procedures as specified in subpart E of this part.

(2) The Administrator may, on the basis of a written application by a manufacturer, prescribe test procedures other than those specified in paragraph (a)(1) of this section for any marine engine he or she determines is not susceptible to satisfactory testing using the procedures specified in paragraph (a)(1) of this section.

(b)(1) The manufacturer may not adjust, repair, prepare, or modify the engines selected for testing and may not perform any emission tests on engines selected for testing pursuant to the test order unless this adjustment, repair, preparation, modification, and/or tests are documented in the manufacturer's engine assembly and inspection procedures and are actually performed or unless these adjustments and/or tests are required or permitted under this subpart or are approved in advance by the Administrator.

(2) The Administrator may adjust or cause to be adjusted any engine parameter which the Administrator has determined to be subject to adjustment for certification and Selective Enforcement Audit testing in accordance with §91.112, to any setting within the physically adjustable range of that parameter, as determined by the Administrator in accordance with §91.112, prior to the performance of any tests. However, if the idle speed parameter is one which the Administrator has determined to be subject to adjustment, the Administrator may not adjust it to any setting which causes a lower engine idle speed than would have been possible within the physically adjustable range of the idle speed parameter if the manufacturer had accumulated 12 hours of service on the engine under paragraph (c) of this section, all other parameters being identically adjusted for the purpose of the comparison. The manufacturer may be requested to supply information needed to establish an alternate minimum idle speed. The Administrator, in making or specifying these adjustments, may consider the effect of the deviation from the manufacturer's recommended setting on emission performance characteristics as well as the likelihood that similar settings will occur on in-use engines. In determining likelihood, the Administrator may consider factors such as, but not limited to, the effect of the adjustment on engine performance characteristics and information from similar in-use engines.

(c) *Service accumulation.* Prior to performing exhaust emission testing on an SEA test engine, the manufacturer may accumulate on each engine a number of hours of service equal to the greater of 12 hours or the number of hours the manufacturer accumulated during certification on the emission data engine corresponding to the family specified in the test order.

(1) Service accumulation must be performed in a manner using good engineering judgment to obtain emission results representative of normal production engines. This service accumulation must be consistent with the new engine break-in instructions contained in the applicable owner's manual.

(2) The manufacturer must accumulate service at a minimum rate of 6 hours per engine during each 24-hour period, unless otherwise approved by the Administrator.

(i) The first 24-hour period for service begins as soon as authorized checks, inspections, and preparations are completed on each engine.

(ii) The minimum service accumulation rate does not apply on weekends or holidays.

(iii) If the manufacturer's service or target is less than the minimum rate specified (6 hours per day), then the minimum daily accumulation rate is equal to the manufacturer's service target.

(3) Service accumulation must be completed on a sufficient number of test engines during consecutive 24-hour periods to assure that the number of engines tested per day fulfills the requirements of paragraphs (g)(1) and (g)(2) of this section.

(d) The manufacturer may not perform any maintenance on test engines after selection for testing, nor may the Administrator allow deletion of any engine from the test sequence, unless requested by the manufacturer and approved by the Administrator before any engine maintenance or deletion.

(e) The manufacturer must expeditiously ship test engines from the point of selection to the test facility. If the test facility is not located at or in close proximity to the point of selection, the manufacturer must assure that test engines arrive at the test facility within 24 hours of selection. The Administrator may approve more time for shipment based upon a request by the manufacturer accompanied by a satisfactory justification.

(f) If an engine cannot complete the service accumulation or an emission test because of a malfunction, the manufacturer may request that the Administrator authorize either the repair of that engine or its deletion from the test sequence.

(g) Whenever a manufacturer conducts testing pursuant to a test order issued under this subpart, the manufacturer must notify the Administrator within one working day of receipt of the test order as to which test facility will be used to comply with the test order. If no test cells are available at a desired facility, the manufacturer must provide alternate testing capability satisfactory to the Administrator.

(1) A manufacturer with projected nonroad engine sales for the United States market for the applicable year of 7,500 or greater must complete emission testing at a minimum rate of two engines per 24-hour period, including each voided test and each smoke test.

(2) A manufacturer with projected nonroad engine sales for the United States market for the applicable year of less than 7,500 must complete emission testing at a minimum rate of one engine per 24-hour period, including each voided test and each smoke test.

(3) The Administrator may approve a lower daily rate of emission testing based upon a request by a manufacturer accompanied by a satisfactory justification.

(h) The manufacturer must perform test engine selection, shipping, preparation, service accumulation, and testing in such a manner as to assure that the audit is performed in an expeditious manner.

(i) Retesting. (1) The manufacturer may retest any engines tested during a Selective Enforcement Audit once a fail decision for the audit has been reached in accordance with § 91.608(e).

(2) The Administrator may approve retesting at other times based upon a request by the manufacturer accompanied by a satisfactory justification.

(3) The manufacturer may retest each engine a total of three times. The manufacturer must test each engine or vehicle the same number of times. The manufacturer may accumulate additional service before conducting a retest, subject to the provisions of paragraph (c) of this section.

(j) A manufacturer must test engines with the test procedure specified in subpart E of this part to demonstrate compliance with the exhaust emission standard (or applicable FEL) for $HC+NO_X$. If alternate procedures were used in certification pursuant to § 91.119, then those alternate procedures must be used.

§ 91.608 Compliance with acceptable quality level and passing and failing criteria for selective enforcement audits.

(a) The prescribed acceptable quality level is 40 percent.

(b) A failed engine is one whose final test results pursuant to § 91.509(b), for $HC+NO_X$, exceed the applicable family emission level.

(c) The manufacturer must test engines comprising the test sample until a pass decision is reached for $HC+NO_X$ or a fail decision is reached for $HC+NO_X$. A pass decision is reached when the cumulative number of failed engines, as defined in paragraph (b) of this section, for $HC+NO_X$ is less than or equal to the pass decision number, as defined in paragraph (d) of this section, appropriate to the cumulative number

of engines tested. A fail decision is reached when the cumulative number of failed engines for $HC+NO_X$ is greater than or equal to the fail decision number, as defined in paragraph (d) of this section, appropriate to the cumulative number of engines tested.

(d) The pass and fail decision numbers associated with the cumulative number of engines tested are determined by using the tables in Appendix A to this subpart, ''Sampling Plans for Selective Enforcement Auditing of Marine Engines,'' appropriate to the projected sales as made by the manufacturer in its report to EPA under §91.504(c)(1). In the tables in Appendix A to this subpart, sampling plan ''stage'' refers to the cumulative number of engines tested. Once a pass or fail decision has been made for $HC+NO_X$, the number of engines with final test results exceeding the emission standard for $HC+NO_X$ shall not be considered any further for the purposes of the audit.

(e) Passing or failing of an SEA occurs when the decision is made on the last engine required to make a decision under paragraph (c) of this section.

(f) The Administrator may terminate testing earlier than required in paragraph (c) of this section.

APPENDIX A TO SUBPART G OF PART 91—SAMPLING PLANS FOR SELECTIVE ENFORCEMENT AUDITING OF MARINE ENGINES

TABLE 1.—SAMPLING PLAN CODE LETTER

Annual engine family sales	Code letter
20–50	AA.[1]
120–99	A.
100–299	B.
300–299	C.
500 or greater	D.

[1] A manufacturer may optionally use either the sampling plan for code letter ''AA'' or sampling plan for code letter ''A'' for Selective Enforcement Audits of engine families with annual sales between 20 and 50 engines. Additionally, the manufacturer may switch between these plans during the audit.

TABLE 2.—SAMPLING PLAN FOR CODE LETTER ''AA''

[Sample inspection criteria]

Stage	Pass No.	Fail No.	Stage	Pass No.	Fail No.
1	([1])	([2])	11	4	8
2	([1])	([2])	12	4	9
3	0	([2])	13	5	9
4	0	([2])	14	5	10

TABLE 2.—SAMPLING PLAN FOR CODE LETTER ''AA''—Continued

[Sample inspection criteria]

Stage	Pass No.	Fail No.	Stage	Pass No.	Fail No.
5	1	5	15	6	10
6	1	6	16	6	10
7	2	6	17	7	10
8	2	7	18	8	10
9	3	7	19	8	10
10	3	8	20	9	10

[1] Test sample passing not permitted at this stage.
[2] Test sample failure not permitted at this stage.

TABLE 3.—SAMPLING PLAN FOR CODE LETTER ''A''

[Sample inspection criteria]

Stage	Pass No.	Fail No.	Stage	Pass No.	Fail No.
1	([1])	([2])	16	6	11
2	([1])	([2])	17	7	12
3	([1])	([2])	18	7	12
4	0	([2])	19	8	13
5	0	([2])	20	8	13
6	1	6	21	9	14
7	1	7	22	10	14
8	2	7	23	10	15
9	2	8	24	11	15
10	3	8	25	11	16
11	3	8	26	12	16
12	4	9	27	12	17
13	5	10	28	13	17
14	5	10	29	14	17
15	6	11	30	16	17

[1] Test sample passing not permitted at this stage.
[2] Test sample failure not permitted at this stage.

TABLE 4.—SAMPLING PLAN FOR CODE LETTER ''B''

[Sample inspection criteria]

Stage	Pass No.	Fail No.
1	([1])	([2])
2	([1])	([2])
3	([1])	([2])
4	([1])	([2])
5	0	([2])
6	1	6
7	1	7
8	2	7
9	2	8
10	3	8
11	3	9
12	4	9
13	4	10
14	5	10
15	5	11
16	6	12
17	6	12
18	7	13
19	8	13
20	8	14
21	9	14
22	9	15
23	10	15
24	10	16
25	11	16
26	11	17

TABLE 4.—SAMPLING PLAN FOR CODE LETTER "B"—Continued

[Sample inspection criteria]

Stage	Pass No.	Fail No.
27	12	17
28	12	18
29	13	18
30	13	19
31	14	19
32	14	20
33	15	20
34	16	21
35	16	21
36	17	22
37	17	22
38	18	22
39	18	22
40	21	22

[1] Test sample passing not permitted at this stage.
[2] Test sample failure not permitted at this stage.

TABLE 5.—SAMPLING PLAN FOR CODE LETTER "C"

[Sample inspection criteria]

Stage	Pass No.	Fail No.
1	([1])	([2])
2	([1])	([2])
3	([1])	([2])
4	([1])	([2])
5	0	([2])
6	0	6
7	1	7
8	2	7
9	2	8
10	3	9
11	3	9
12	4	10
13	4	10
14	5	11
15	5	11
16	6	12
17	6	12
18	7	13
19	7	13
20	8	14
21	8	14
22	9	15
23	10	15
24	10	16
25	11	16
26	11	17
27	12	17
28	12	18
29	13	18
30	13	19
31	14	19
32	14	20
33	15	20
34	15	21
35	16	21
36	16	22
37	17	22
38	18	23
39	18	23
40	19	24
41	19	24
42	20	25
43	20	25
44	21	26
45	21	27

TABLE 5.—SAMPLING PLAN FOR CODE LETTER "C"—Continued

[Sample inspection criteria]

Stage	Pass No.	Fail No.
46	22	27
47	22	27
48	23	27
49	23	27
50	26	27

[1] Test sample passing not permitted at this stage.
[2] Test sample failure not permitted at this stage.

TABLE 6.—SAMPLING PLAN FOR CODE LETTER "D"

[Sample inspection criteria]

Stage	Pass No.	Fail No.
1	([1])	([2])
2	([1])	([2])
3	([1])	([2])
4	([1])	([2])
5	0	([2])
6	0	6
7	1	7
8	2	8
9	2	8
10	3	9
11	3	9
12	4	10
13	4	10
14	5	11
15	5	11
16	6	12
17	6	12
18	7	13
19	7	13
20	8	14
21	8	14
22	9	15
23	9	15
24	10	16
25	11	16
26	11	17
27	12	17
28	12	18
29	13	19
30	13	19
31	14	20
32	14	20
33	15	21
34	15	21
35	16	22
36	16	22
37	17	23
38	17	23
39	18	24
40	18	24
41	19	25
42	19	26
43	20	26
44	21	27
45	21	27
46	22	28
47	22	28
48	23	29
49	23	29
50	24	30
51	24	30
52	25	31
53	25	31
54	26	32

TABLE 6.—SAMPLING PLAN FOR CODE LETTER "D"—Continued

[Sample inspection criteria]

Stage	Pass No.	Fail No.
55	26	32
56	27	33
57	27	33
58	28	33
59	28	33
60	32	33

[1] Test sample passing not permitted at this stage.
[2] Test sample failure not permitted at this stage.

Subpart H—Importation of Nonconforming Marine Engines

§91.701 Applicability.

(a) Except where otherwise indicated, this subpart is applicable to marine SI engines for which the Administrator has promulgated regulations under this part prescribing emission standards, including engines incorporated into marine vessels or equipment, that are offered for importation or imported into the United States, but which engines, at the time of importation or being offered for importation are not covered by certificates of conformity issued under section 213 and section 206(a) of the Clean Air Act as amended (that is, which are nonconforming marine engines as defined in §91.702), and this part. Compliance with regulations under this subpart does not relieve any person or entity from compliance with other applicable provisions of the Clean Air Act.

(b) Regulations prescribing further procedures for the importation of marine SI engines and marine vessels or equipment into the customs territory of the United States, as defined in 19 U.S.C. 1202, are set forth in U.S. Customs Service regulations.

§91.702 Definitions.

The definitions in subpart A of this part apply to this subpart. The following definitions also apply to this subpart.

Certificate of conformity. The document issued by the Administrator under section 213 and section 206(a) of the Act.

Nonconforming marine engine. A marine SI engine which is not covered by a certificate of conformity prior to importation or being offered for importation (or for which such coverage has not been adequately demonstrated to EPA). Also, a marine SI engine which was originally covered by a certificate of conformity, but subsequently altered or modified such that it is no longer in a certified configuration.

Original engine manufacturer (OEM). The entity which originally manufactured the marine engine.

United States. United States includes the customs territory of the United States as defined in 19 U.S.C. 1202, and the Virgin Islands, Guam, American Samoa, and the Commonwealth of the Northern Mariana Islands.

§91.703 Admission.

(a) A nonconforming marine SI engine offered for importation may only be imported into the United States under §91.704, provided that an exemption or exclusion is granted by the Administrator. Final admission shall not be granted unless the marine SI engine is exempted or excluded under §91.704.

(b) In order to obtain admission the importer must submit to the Administrator a written request for approval containing the following:

(1) Identification of the importer of the marine SI engine and the importer's address, telephone number, and taxpayer identification number;

(2) Identification of the marine SI engine owner, the owner's address, telephone number, and taxpayer identification number;

(3) Identification of the marine SI engine including make, model, identification number, and original production year;

(4) Information indicating under what provision of these regulations the marine SI engine is to be imported;

(5) Identification of the place(s) where the subject marine SI engine is to be stored;

(6) Authorization for EPA enforcement officers to conduct inspections or testing otherwise permitted by the Act or regulations thereunder; and

(7) Such other information as is deemed necessary by the Administrator.

§91.704 Exemptions and exclusions.

(a) Individuals and businesses are eligible to import nonconforming marine

SI engines into the United States only under the provisions of this section.

(b) Notwithstanding other requirements of this subpart, a nonconforming marine SI engine entitled to one of the temporary exemptions of this paragraph may be conditionally admitted into the United States if prior written approval for the conditional admission is obtained from the Administrator. Conditional admission must be under bond. The Administrator may request that the U.S. Customs Service require a specific bond amount to ensure compliance with the requirements of the Act and this subpart. A written request for approval from the Administrator must contain the identification required in §91.703(b) and information that demonstrates that the importer is entitled to the exemption. Noncompliance with provisions of this section may result in the forfeiture of the total amount of the bond or exportation of the marine engine. The following temporary exemptions are permitted by this paragraph:

(1) *Exemption for repairs or alterations.* Upon written approval by EPA, a person may conditionally import under bond a nonconforming marine SI engine solely for purpose of repair(s) or alteration(s). The marine SI engines may not be operated in the United States other than for the sole purpose of repair or alteration. It may not be sold or leased in the United States and must be exported upon completion of the repair(s) or alteration(s).

(2) *Testing exemption.* A nonconforming test marine SI engine may be conditionally imported under bond by a person subject to the requirements of §91.1005. A test marine SI engine may be operated in the United States provided that the operation is an integral part of the test. This exemption is limited to a period not exceeding one year from the date of importation unless a request is made by the appropriate importer, and subsequently granted by EPA, concerning the marine engine in accordance with §91.1005(f) for a subsequent one-year period.

(3) *Display exemptions.* (i) A nonconforming marine engine intended solely for display may be conditionally imported under bond subject to the requirements of §91.1007.

(ii) A display marine engine may be imported by any person for purposes related to a business or the public interest. Such purposes do not include collections normally inaccessible or unavailable to the public on a daily basis, display of a marine engine at a dealership, private use, or other purpose that the Administrator determines is not appropriate for display exemptions. A display marine engine may not be sold or leased in the United States and may not be operated in the United States except for the operation incident and necessary to the display purpose.

(iii) A temporary display exemption is granted for 12 months or for the duration of the display purpose, whichever is shorter. Extensions of up to 12 months each are available upon approval by the Administrator. In no circumstances, however, may the total period of exemption exceed 36 months.

(c) Notwithstanding any other requirement of this subpart, a marine SI engine may be finally admitted into the United States under this paragraph if prior written approval for such final admission is obtained from the Administrator. A request for approval is to contain the identification information required in §91.703(b) (except for §91.703(b)(5)) and information that demonstrates that the importer is entitled to the exemption. The following exemptions are permitted by this paragraph:

(1) *National security exemption.* A nonconforming marine engine may be imported under the national security exemption found at §91.1008.

(2) *Exemption for marine engines identical to United States certified versions.* (i) Any person (including businesses) is eligible for importing a nonconforming marine SI engine into the United States under the provisions of this paragraph. An exemption will be granted if the applicant demonstrates to the satisfaction of the Administrator that the marine engine:

(A) Is owned by the importer;

(B) Is not offered for importation for the purpose of resale; and

(C) Is proven to be identical, in all material respects, to a marine SI engine of the same or later model year

certified by the Original Engine Manufacturer for sale in the United States or is proven to have been modified to be identical, in all material respects, to a marine engine of the same or later model year certified by the OEM for sale in the United States according to complete written instructions provided by the OEM's United States representative, or his/her designee.

(ii) Proof of conformity.

(A) Documentation submitted pursuant to this section for the purpose of proving conformity of individual marine engines is to contain sufficiently organized data or evidence demonstrating that the marine engine identified pursuant to §91.703(b) is identical, in all material respects, to a marine engine identified in an OEM's application for certification.

(B) If the documentation does not contain all the information required by this part, or is not sufficiently organized, EPA will notify the importer of any areas of inadequacy and that the documentation will not receive further consideration until the required information or organization is provided.

(C) If EPA determines that the documentation does not clearly or sufficiently demonstrate that a marine engine is eligible for importation under this paragraph, EPA will notify the importer in writing.

(D) If EPA determines that the documentation clearly and sufficiently demonstrates that a marine engine is eligible for importation under this paragraph, EPA will grant approval for final admission in writing.

(d) Foreign diplomatic and military personnel may conditionally import a nonconforming marine engine without bond. At the time of conditional admission, the importer must submit to the Administrator the written report required in §91.703(b) (except for information required by §91.703(b)(5)) and a statement from the U.S. Department of State confirming qualification for this exemption. Foreign military personnel may, in lieu of a statement from the U.S. Department of State, submit to the Administrator a copy of their orders for duty in the United States. The marine SI engine may not be sold or leased in the United States and must be exported if the individual's diplomatic status or the foreign military orders for duty in the U.S. are no longer applicable, as determined by the Department of State, unless subsequently brought into conformity with U.S. emission requirements in accordance with §91.704(c)(2).

(e) Competition exclusion. A nonconforming marine engine may be conditionally imported by any person provided the importer demonstrates to the Administrator that the marine engine is used to propel a marine vessel used solely for competition and obtains prior written approval from the Administrator. A nonconforming engine imported pursuant to this paragraph may not be operated in the United States except for that operation incident and necessary for the competition purpose, unless subsequently brought into conformity with United States emission requirements in accordance with §91.704(c)(2).

(f) An application for exemption and exclusion provided for in paragraphs (b), (c), and (e) of this section shall be mailed to: U.S. Environmental Protection Agency, Office of Mobile Sources, Engine Programs & Compliance Division (6403–J), 401 M Street, SW., Washington, DC 20460, Attention: Imports.

§91.705 Prohibited acts; penalties.

(a) The importation of a marine SI engine, including a marine engine incorporated into marine vessels or equipment, which is not covered by a certificate of conformity other than in accordance with this subpart and the entry regulations of the U.S. Customs Service is prohibited. Failure to comply with this section is a violation of §91.1103(a)(1) and section 213(d) of the Act.

(b) Unless otherwise permitted by this subpart, during a period of conditional admission, the importer of a marine engine may not:

(1) Register, license, or operate the marine engine in the United States;

(2) Sell or lease or offer the marine engine for sale or lease;

(c) A marine SI engine conditionally admitted pursuant to §91.704 (b), (d) or (e) and not granted final admission by the end of the period of conditional admission, or within such additional time

as the Administrator and the U.S. Customs Service may allow, is deemed to be unlawfully imported into the United States in violation of § 91.1103(a)(1), section 213(d) and section 203 of the Act, unless the marine engine has been delivered to the U.S. Customs Service for export or other disposition under applicable Customs laws and regulations. A marine SI engine not so delivered is subject to seizure by the U.S. Customs Service.

(d) An importer who violates § 91.1103(a)(1), section 213(d) and section 203 of the Act is subject to a civil penalty under § 91.1106 and section 205 of the Act of not more than $25,000 for each marine engine subject to the violation. In addition to the penalty provided in the Act, where applicable, a person or entity who imports an engine under the exemption provisions of § 91.704(b) and, who fails to deliver the marine engine to the U.S. Customs Service by the end of the period of conditional admission is liable for liquidated damages in the amount of the bond required by applicable Customs laws and regulations.

§ 91.706 Treatment of confidential information.

The provisions for treatment of confidential information as described in § 91.7 apply.

Subpart I—In-Use Testing and Recall Regulations

§ 91.801 Applicability.

The requirements of subpart I are applicable to all marine SI engines subject to the provisions of subpart A of part 91.

(a) Marine engines subject to provisions of subpart B of this part are subject to recall regulations specified in 40 CFR part 85, subpart S, except for the items set forth in this subsection.

(b) Reference to section 214 of the Clean Air Act in 40 CFR 85.1801(a) does not apply. Reference to section 216 of the Clean Air Act does apply.

(c) Reference to section 202 of the Act in 40 CFR 85.1802(a) does not apply. Reference to section 213 of the Act does apply.

(d) Reference to ''family particulate emission limits as defined in Part 86 promulgated under section 202 of the Act'' in 40 CFR 85.1803(a) and 85.1805(a)(1) does not apply. Family emission limits as defined in 40 CFR part 89 promulgated under section 213 of the Act does apply.

(e) Add the following paragraph to 40 CFR 85.1805 (a)(9): A telephone number provided by the manufacturer, which may be used to report difficulty in obtaining recall repairs.

(f) The requirements of the Manufacturer In-use testing program set forth in §§ 91.803 through 91.805 are waived for existing technology OB/PWC as defined in § 91.3 through model year 2003.

(1) The Administrator has the discretion to waive the requirements of the Manufacturer In-use testing program set forth in sections 91.803 through 91.805 for existing technology OB/PWC for a specific engine family up to model year 2005 if, upon the request of the manufacturer, the Administrator determines that the engine family will be phased out of U.S. production by model year 2005. As a condition to receiving such a waiver for either model year 2004 or 2005 or both, the manufacturer must discontinue U.S. production according to the schedule upon which the Administrator based the waiver. Failure to do so by the manufacturer will void *ab initio* the certificate of conformity.

(2) A manufacturer request under paragraph (f)(1) of this section must be in writing and must apply to a specific engine family. The request must identify the engine family designation, the schedule for phasing the engine family out of U.S. production, and any other information the Administrator may require.

§ 91.802 Definitions.

(a) For the purposes of this subpart, except as otherwise provided, the definitions in subpart A of this part apply to this subpart.

(b) The definitions of 40 CFR Part 85, subpart S, § 85.1801 also apply to this Part.

§ 91.803 Manufacturer In-use testing program.

(a) EPA shall annually identify engine families and those configurations

within families which the manufacturer must then subject to in-use testing as described below. For each model year, EPA may identify a number of engine families that is no greater than twenty-five percent of the number of engine families to which this subpart is applicable produced in that model year.

(b) For each engine family identified by EPA, engine manufacturers shall perform emission testing of an appropriate sample of in-use engines from each engine family. Manufacturers shall submit data from this in-use testing to EPA.

(c) *Number of engines to be tested.* An engine manufacturer shall test in-use engines from each engine family identified by EPA. Engines to be tested shall have accumulated between half and three-quarters of the family's useful life. The number of engines to be tested by a manufacturer will be determined by the following method:

(1) A minimum of four (4) engines per family provided that no engine fails any standard. For each failing engine, two more engines shall be tested until the total number of engines equals ten (10).

(2) For engine families of less than 500 engines for the identified model year or for engine manufacturers who make less than or equal to 2,000 for that model year, a minimum of two (2) engines per family provided that no engine fails any standard. For each failing engine, two more engines shall be tested until the total number of engines equals ten (10).

(3) If an engine family was certified using carry over emission data and has been previously tested under paragraph (c) (1) or (2) of this section (and EPA has not ordered a recall for that family), then only one engine for that family must be tested. If that one engine fails any pollutant, testing must be conducted as outlined at paragraph (c) (1) or (2) of this section, whichever is appropriate.

(d) At the discretion of the Administrator, an engine manufacturer may test more engines than the minima described in paragraph (c) of this section or may concede failure before testing a total of ten (10) engines.

(e) The Administrator will consider failure rates, average emission levels and the existence of any defects among other factors in determining whether to pursue remedial action under this subpart. The Administrator may order a recall pursuant to §§91.807–91.814 before testing reaches the tenth engine.

(f) The Administrator may approve an alternative to manufacturer in-use testing, where:

(1) Engine family production is less than or equal to 200 per year; or

(2) Engines cannot be obtained for testing because they are used substantially in craft which are not conducive to engine removal such as large vessels where the engine can not be removed without dismantling either the engine or the vessel; or

(3) Other compelling circumstances associated with the structure of the industry and uniqueness of marine engine applications. Such alternatives shall be designed to determine whether the engine family is in compliance in-use.

(g) *Collection of in-use engines.* The engine manufacturer shall procure in-use engines which have been operated for between half and three-quarters of the engine's useful life. The engine manufacturer may test engines from more than one model year in a given year. The manufacturer shall begin testing within twelve calendar months after receiving notice that EPA has identified a particular engine family for testing and shall complete testing of such engine family within twelve calendar months from the start of such testing. Test engines may be procured from sources associated with the engine manufacturer (i.e., manufacturer established fleet engines, etc.) or from sources not associated with the manufacturer (i.e., consumer-owned engines, independently-owned fleet engines, etc.).

§91.804 Maintenance, procurement and testing of in-use engines.

(a) A test engine must have a maintenance and use history representative of actual in-use conditions.

(1) To comply with this requirement a manufacturer must obtain information from the end users regarding the

accumulated usage, maintenance, operating conditions, and storage of the test engines.

(2) Documents used in the procurement process must be maintained as required in § 91.121.

(b) The manufacturer may perform minimal set-to-spec maintenance on components of a test engine that are not subject to parameter adjustment. Maintenance may include only that which is listed in the owner's instructions for engines with the amount of service and age of the acquired test engine. Documentation of all maintenance and adjustments shall be maintained and retained as required by § 91.121.

(c) At least one valid emission test, according to the test procedure outlined in subpart E of this part, is required for each in-use engine.

(d) The Administrator may waive portions or requirements of the test procedure, if any, that are not necessary to determine in-use compliance.

(e) If a selected in-use engine fails to comply with any applicable emission standards, the manufacturer shall determine the reason for noncompliance. The manufacturer must report all such reasons of noncompliance within fifteen days of completion of testing.

§ 91.805 In-use test program reporting requirements.

(a) The manufacturer shall electronically submit to the Administrator within three (3) months of completion of testing all emission testing results generated from the in-use testing program. The following information must be reported for each test engine:

(1) Engine family,

(2) Model,

(3) Engine serial number,

(4) Date of manufacture,

(5) Estimated hours of use,

(6) Date and time of each test attempt,

(7) Results (if any) of each test attempt,

(8) Results of all emission testing,

(9) Summary of all maintenance and/or adjustments performed,

(10) Summary of all modifications and/or repairs,

(11) Determinations of noncompliance.

(b) The manufacturer must electronically submit the results of its in-use testing with a pre-approved information heading. The Administrator may exempt manufacturers from this requirement upon written request with supporting justification.

(c) All testing reports and requests for approvals made under this subpart shall be addressed to: Manager, Engine Compliance Programs Group 6403–J, U.S. Environmental Protection Agency, 401 M Street SW., Washington, DC 20460.

(d) The Administrator may approve and/or require modifications to a manufacturer's in-use testing programs.

§ 91.806 Voluntary emissions recall.

(a) Prior to an EPA ordered recall, the manufacturer may perform a voluntary emissions recall pursuant to regulations at § 91.904 of this part. Such manufacturer is subject to the reporting requirements at § 91.905 of this part.

(b) Once EPA determines that a substantial number of engines fail to conform with the requirements of section 213 of the Act or this part, the manufacturer will not have the option of a voluntary emissions recall.

Subpart J—Emission-related Defect Reporting Requirements, Voluntary Emission Recall Program

§ 91.901 Applicability.

The requirements of this subpart J are applicable to all marine engines subject to the provisions of subpart A of this part 91. The requirement to report emission-related defects affecting a given class or category of engines remains applicable for five years from the end of the model year in which such engines were manufactured.

§ 91.902 Definitions.

The definitions in subpart A of this part apply to this subpart.

§ 91.903 Applicability to Part 85, subpart T.

(a) Marine SI engines subject to provisions of subpart A of this part are subject to emission defect reporting requirements specified in 40 CFR Part 85,

subpart T, except for the items set forth in this section.

(b) 40 CFR 85.1901 does not apply. See §91.901.

(c) Reference to the Clean Air Act, 42 U.S.C. 1857 in 40 CFR 85.1902(a) does not apply. Reference to the Clean Air Act, 42 U.S.C. 7401 does apply.

(d) Reference to the ''approved Application for Certification required by 40 CFR 86.077–22 and like provisions of Part 85 and Part 86 of Title 40 of the Code of Federal Regulations'' does not apply. Reference to the approved application for certification required by 91.108 and like provisions of Part 91 does apply.

(e) Reference to section 202(d) of the Act in §85.1902(c) does not apply. Reference to section 202(d) and section 213 of the Act does apply.

(f) Reference to section 214 of the Act in §85.1902(e) and (f) does not apply. Reference to section 216 of the Act does apply.

§91.904 Voluntary emission recall.

(a) A manufacturer, prior to initiating a voluntary emission recall program, must submit to the EPA the following information for a 15 day review and comment period:

(1) A description of each class or category of engines recalled, including the number of engines to be recalled, the model year, and such other information as may be required to identify the engines recalled;

(2) A description of the specific modifications, alterations, repairs, corrections, adjustments, or other changes to be made to correct the engines affected by the emission-related defect;

(3) A description of the method by which the manufacturer will notify engine owners including copies of any letters of notification to be sent to engine owners;

(4) A description of the proper maintenance or use, if any, upon which the manufacturer conditions eligibility for repair under the recall plan, and a description of the proof to be required of an engine owner to demonstrate compliance with any such conditions;

(5) A description of the procedure to be followed by engine owners to obtain correction of the nonconformity. This may include designation of the date on or after which the owner can have the nonconformity remedied, the time reasonably necessary to perform the labor to remedy the defect, and the designation of facilities at which the defect can be remedied;

(6) A description of the class of persons other than dealers and authorized warranty agents of the manufacturer who will remedy the defect; and

(7) A description of the system by which the manufacturer will assure that an adequate supply of parts is available to perform the repair under the plan.

(b) The manufacturer must submit at least one report on the progress of the recall campaign. This report is submitted one year from the date notification begins and includes the following information:

(1) The methods used to notify both engine owners, dealers and other individuals involved in the recall campaign;

(2) The number of engines known or estimated to be affected by the emission-related defect and an explanation of the means by which this number was determined;

(3) The number of engines actually receiving repair under the plan;

(4) The number of engine owners, dealers, and other individuals involved in the recall campaign that have been notified and the number of engines that have actually received repair; and

(5) The number of engines determined to be ineligible for remedial action due to a failure to properly maintain or use such engines.

§91.905 Reports, voluntary recall plan filing, record retention.

(a) The defect report, voluntary recall plan, and the voluntary recall progress report shall be sent to: Manager, Engine Compliance Programs Group 6403–J, Environmental Protection Agency, 401 M St. SW., Washington, DC 20460.

(b) The information gathered by the manufacturer to compile the reports must be retained for not less than five years from the date of the manufacture of the engines and must be made available to duly authorized officials of the EPA upon request.

§ 91.906 Responsibility under other legal provisions preserved.

The filing of any report under the provisions of this subpart will not affect a manufacturer's responsibility to file reports or applications, obtain approval, or give notice under any provision of law.

§ 91.907 Disclaimer of production warranty applicability.

(a) The act of filing an Emission Defect Information Report is inconclusive as to the existence of a defect subject to the warranty provided by section 207(a) of the Act.

(b) A manufacturer may include on each page of its Emission Defect Information Report a disclaimer stating that the filing of a Defect Information Report pursuant to these regulations is not conclusive as to the applicability of the warranty provided by subpart M of this part.

Subpart K—Exclusion and Exemption of Marine SI Engines

§ 91.1001 Applicability.

The requirements of this subpart K are applicable to all marine spark-ignition propulsion engines subject to the provisions of subpart A of this part 91.

§ 91.1002 Definitions.

The definitions in subpart A of this part apply to this subpart. The following definitions also apply to this subpart:

Exemption means exemption from the prohibitions of § 91.1103.

Export exemption means an exemption granted under § 91.1104(b) for the purpose of exporting new marine SI engines.

National security exemption means an exemption which may be granted under § 91.1104(b) for the purpose of national security.

Manufacturer-owned marine engine means an uncertified marine SI engine owned and controlled by a marine SI engine manufacturer and used in a manner not involving lease or sale by itself or in a marine vessel or piece of equipment employed from year to year in the ordinary course of business for product development, production method assessment, or market promotion purposes.

Testing exemption means an exemption which may be granted under § 91.1104(b) for the purpose of research, investigations, studies, demonstrations or training, but not including national security.

§ 91.1003 Exclusions based on section 216(10) of the Act.

(a) For the purpose of determining the applicability of section 216(10) of the Act, any marine SI engine as that term is defined in subpart A of this part, is deemed a nonroad engine.

(b) EPA will maintain a list of models of marine SI engines, and the marine vessels which use such engines, that have been determined to be excluded because they are used solely for competition. This list will be available to the public and may be obtained by writing to the following address: Group Manager, Engine Compliance Programs Group, Engine Programs and Compliance Division (6403J), Environmental Protection Agency, 401 M Street SW., Washington, DC 20460.

(c) Upon written request with supporting documentation, EPA will make written determinations as to whether certain engines are or are not marine SI engines. Engines that are determined not to be marine SI engines are excluded from regulations under this part but may be subject to regulations under another part.

§ 91.1004 Who may request an exemption.

(a) Any person may request a testing exemption under § 91.1005.

(b) Any marine SI engine manufacturer may request a national security exemption under § 91.1008.

(c) For marine SI engine manufacturers, marine SI engines for export purposes are exempt without application, subject to the provisions of § 91.1009.

(d) For eligible manufacturers, as determined by § 91.1006, manufacturer-owned marine SI engines are exempt without application, subject to the provisions of § 91.1006.

(e) For any person, display marine SI engines are exempt without application, subject to the provisions of § 91.1007.

§91.1005 Testing exemption.

(a) Any person requesting a testing exemption must demonstrate the following:

(1) That the proposed test program has a purpose which constitutes an appropriate basis for an exemption in accordance with §91.1104(b);

(2) That the proposed test program necessitates the granting of an exemption;

(3) That the proposed test program is reasonable in scope; and

(4) That the proposed test program exhibits a degree of control consonant with the purpose of the program and the EPA's monitoring requirements.

(5) Paragraphs (b), (c), (d), and (e) of this section describe what constitutes a sufficient demonstration for each of the four identified elements.

(b) With respect to the purpose of the proposed test program, an appropriate purpose would be research, investigations, studies, demonstrations, or training, but not national security. A concise statement of purpose is a required item of information.

(c) With respect to the necessity that an exemption be granted, necessity arises from an inability to achieve the stated purpose in a practicable manner without performing or causing to be performed one or more of the prohibited acts under §91.1103. In appropriate circumstances, time constraints may be a sufficient basis for necessity, but the cost of certification alone, in the absence of extraordinary circumstances, is not a basis for necessity.

(d) With respect to reasonableness, a test program must exhibit a duration of reasonable length and affect a reasonable number of engines. In this regard, required items of information include:

(1) An estimate of the program's duration.

(2) The maximum number of marine engines involved.

(e) With respect to control, the test program must incorporate procedures consistent with the purpose of the test and be capable of affording EPA monitoring capability. As a minimum, required items of information include:

(1) The technical nature of the test;

(2) The site of the test;

(3) The duration and accumulated engine operation associated with the test;

(4) The ownership arrangement with regard to the engines involved in the test;

(5) The intended final disposition of the engines;

(6) The manner in which the engine identification numbers will be identified, recorded, and made available; and

(7) The means or procedure whereby test results will be recorded.

(f) A manufacturer of new marine SI engines may request a testing exemption to cover marine SI engines intended for use in test programs planned or anticipated over the course of a subsequent one-year period. Unless otherwise required by the Manager, Engine Compliance Programs Group, a manufacturer requesting such an exemption need only furnish the information required by paragraphs (a)(1) and (d)(2) of this section along with a description of the recordkeeping and control procedures that will be employed to assure that the engines are used for purposes consistent with section 91.1104(b).

§91.1006 Manufacturer-owned exemption and precertification exemption.

(a) Except as provided in paragraph (b) of this section, any manufacturer-owned marine SI engine, as defined by §91.1002, is exempt from compliance with §91.1103, without application, if the manufacturer complies with the following terms and conditions:

(1) The manufacturer must establish, maintain, and retain the following adequately organized and indexed information on each exempted engine:

(i) Engine identification number,

(ii) Use of the engine on exempt status and

(iii) Final disposition of any engine removed from exempt status.

(2) The manufacturer must provide right of entry and access to these records to EPA authorized representatives as outlined in §91.505.

(3) Unless the requirement is waived or an alternative procedure is approved by the Director, Engine Programs & Compliance Division, the manufacturer must permanently affix a label to each marine engine on exempt status. This label should:

(i) Be affixed in a readily visible portion of the engine,

(ii) Be attached in such a manner that it cannot be removed without destruction or defacement,

(iii) State in the English language/and in block letters and numerals of a color that contrasts with the background of the label, the following information:

(A) The label heading ''Emission Control Information;''

(B) Full corporate name and trademark of manufacturer;

(C) Engine displacement, engine family identification, and model year of engine; or person or office to be contacted for further information about the engine;

(D) The statement ''This marine SI engine is exempt from the prohibitions of 40 CFR 91.1103.''

(4) No provision of paragraph (a)(3) of this section prevents a manufacturer from including any other information it desires on the label.

§ 91.1007 Display exemption.

An uncertified marine SI engine is a display engine when it is to be used solely for display purposes, will only be operated incident and necessary to the display purpose, and will not be sold unless an applicable certificate of conformity has been received or the engine has been finally admitted pursuant to subpart H of this part. A display engine is exempt without application.

§ 91.1008 National security exemption.

(a)(1) Any marine SI engine, otherwise subject to this part, which is used in a vessel that exhibits substantial features ordinarily associated with military combat such as armor and/or permanently affixed weaponry and which will be owned and/or used by an agency of the Federal government with responsibility for national defense, will be exempt from these regulations for purposes of national security. No request for exemption is necessary.

(2) Manufacturers may request a national security exemption for any marine SI engine, otherwise subject to this part, which does not meet the conditions described in paragraph (a)(1) of this section. A manufacturer requesting a national security exemption must state the purpose for which the exemption is required and the request must be endorsed by an agency of the federal government charged with responsibility for national defense.

(b) EPA will maintain a list of models of marine SI engines (and the vessels which use them) that have been granted a national security exemption under paragraph (a)(2) of this section. This list will be available to the public and may be obtained by writing to the following address: Manager, Engine Compliance Programs Group 6403–J, Environmental Protection Agency, 401 M Street SW., Washington, DC 20460.

§ 91.1009 Export exemptions.

(a) A new marine SI engine intended solely for export, and so labeled or tagged on the outside of the container and on the engine itself, is subject to the provisions of § 91.1103, unless the importing country has emission standards for new marine engines which differ from EPA standards.

(b) For the purpose of paragraph (a) of this section, a country having no standards, whatsoever, is deemed to be a country having emission standards which differ from EPA standards.

(c) EPA will maintain a list of foreign countries that have in force marine SI emission standards identical to U.S. EPA standards and have so notified EPA. This list may be obtained by writing to the following address: Manager, Engine Compliance Programs Group 6403–J, Environmental Protection Agency, 401 M Street, SW., Washington, DC. 20460. New marine SI engines exported to such countries must comply with EPA certification regulations.

(d) It is a condition of any exemption for the purpose of export under § 91.1004(b) that such exemption be void *ab initio* with respect to a new marine SI engine intended solely for export if such marine SI engine is sold, or offered for sale, to an ultimate purchaser in the United States for purposes other than export.

§ 91.1010 Granting of exemptions.

(a) If upon completion of the review of an exemption request made pursuant to § 91.1005 or § 91.1008, EPA determines

it is appropriate to grant such an exemption, a memorandum of exemption will be prepared and submitted to the person requesting the exemption. The memorandum shall set forth the basis for the exemption, its scope, and such terms and conditions as are deemed necessary. Such terms and conditions shall generally include, but are not limited to, agreements by the applicant to conduct the exempt activity in the manner described to EPA, create and maintain adequate records accessible to EPA at reasonable times, employ labels for the exempt engines setting forth the nature of the exemption, take appropriate measures to assure that the terms of the exemption are met, and advise EPA of the termination of the activity and the ultimate disposition of the engines.

(b) Any exemption granted pursuant to paragraph (a) of this section is deemed to cover any subject engine only to the extent that the specified terms and conditions are complied with. A breach of any term or condition causes the exemption to be void *ab initio* with respect to any engine. Consequently, the causing or the performing of an act prohibited under §91.1103(a) (1) or (3), other than in strict conformity with all terms and conditions of this exemption renders the person to whom the exemption is granted, and any other person to whom the provisions of §91.1103 are applicable, liable under sections 204 and 205 of the Act.

§91.1011 Submission of exemption requests.

Requests for exemption or further information concerning exemptions and/or the exemption request review procedure should be addressed to: Manager, Engine Compliance Programs Group 6403J, Environmental Protection Agency, 401 M Street, SW., Washington, DC 20460.

§91.1012 Treatment of confidential information.

The provisions for treatment of confidential information described in §91.7 apply to this subpart.

Subpart L—Prohibited Acts and General Enforcement Provisions

§91.1101 Applicability.

The requirements of subpart L are applicable to all marine engines and vessels subject to the provisions of subpart A of this part 91.

§91.1102 Definitions.

The definitions in subpart A of this part apply to this subpart. All terms not defined herein or in subpart A have the meaning given them in the Act.

§91.1103 Prohibited acts.

(a) The following acts and the causing thereof are prohibited:

(1)(i) In the case of a manufacturer of new marine SI engines or vessels for distribution in commerce, the sale, the offering for sale, or the introduction, or delivery for introduction, into commerce, of any new marine SI engine manufactured after the applicable effective date under this part unless such engine is covered by a certificate of conformity issued (and in effect) under regulations found in this part.

(ii) In the case of any person, except as provided by regulation of the Administrator, the importation into the United States of any new marine SI engine manufactured after the applicable effective date under this part unless such engine is covered by a certificate of conformity issued (and in effect) under regulations found in this part.

(2)(i) For a person to fail or refuse to permit access to or copying of records or to fail to make reports or provide information required under §91.1104.

(ii) For a person to fail or refuse to permit entry, testing or inspection authorized under §91.118, 91.505 or 91.1104.

(iii) For a person to fail or refuse to perform tests, or to have tests performed as required under §91.118 or §91.1104.

(iv) For a person to fail to establish or maintain records as required under §91.1104.

(3)(i) For a person to remove or render inoperative a device or element of design installed on or in a marine engine in compliance with regulations under this part prior to its sale and delivery to the ultimate purchaser, or for a person knowingly to remove or

render inoperative such a device or element of design after the sale and delivery to the ultimate purchaser; or

(ii) For a person to manufacture, sell or offer to sell, or install, a part or component intended for use with, or as part of, a marine SI engine, where a principal effect of the part or component is to bypass, defeat, or render inoperative a device or element of design installed on or in a marine SI engine in compliance with regulations issued under this part, and where the person knows or should know that the part or component is being offered for sale or installed for this use or put to such use.

(4) For a manufacturer of a new marine SI engine subject to standards prescribed under this part:

(i) To sell, offer for sale, or introduce or deliver into commerce, a marine SI engine unless the manufacturer has complied with the requirements of § 91.1203.

(ii) To sell, offer for sale, or introduce or deliver into commerce, a marine SI engine unless a label or tag is affixed to the engine in accordance with regulations under this part.

(iii) To provide directly or indirectly in any communication to the ultimate purchaser or a subsequent purchaser that the coverage of a warranty under the Act is conditioned upon use of a part, component, or system manufactured by the manufacturer or a person acting for the manufacturer or under its control, or conditioned upon service performed by such persons, except as provided in subpart M of this part.

(iv) To fail or refuse to comply with the terms and conditions of the warranty under subpart M of this part.

(5) For a manufacturer of new marine vessels or equipment to distribute in commerce, sell, offer for sale, or introduce into commerce, marine vessels or equipment which contain an engine not covered by a certificate of conformity.

(b) For the purposes of enforcement of this part, the following apply:

(1) Nothing in paragraph (a) of this section is to be construed to require the use of manufacturer parts in maintaining or repairing a marine SI engine.

(2) Actions for the purpose of repair or replacement of a device or element of design or any other item are not considered prohibited acts under § 91.1103(a) if the actions are a necessary and temporary procedure, the device or element is replaced upon completion of the procedure, and the action results in the proper functioning of the device or element of design.

(3) Actions for the purpose of a conversion of a marine SI engine for use of a clean alternative fuel (as defined in Title II of the Act) are not considered prohibited acts under § 91.1103(a) if:

(i) The engine complies with the applicable standard when operating on the alternative fuel, and the device or element is replaced upon completion of the conversion procedure, and

(ii) In the case of engines converted to dual fuel or flexible use, the action results in proper functioning of the device or element when the marine SI engine operates on conventional fuel.

§ 91.1104 General enforcement provisions.

(a) *Information collection provisions.* (1) Every manufacturer of new marine SI engines and other persons subject to the requirements of this part must establish and maintain records, perform tests where such testing is not otherwise reasonably available under this part, make reports and provide information the Administrator may reasonably require to determine whether the manufacturer or other person has acted or is acting in compliance with this part or to otherwise carry out the provisions of this part, and must, upon request of an officer or employee duly designated by the Administrator, permit the officer or employee at reasonable times to have access to and copy such records.

(2) For purposes of enforcement of this part, an officer or employee duly designated by the Administrator, upon presenting appropriate credentials, is authorized:

(i) To enter, at reasonable times, any establishment of the manufacturer, or of any person whom the manufacturer engaged to perform any activity required under paragraph (a)(1) of this section, for the purposes of inspecting or observing any activity conducted pursuant to paragraph (a)(1) of this section, and

(ii) To inspect records, files, papers, processes, controls, and facilities used in performing an activity required by paragraph (a)(1) of this section, by the manufacturer or by a person whom the manufacturer engaged to perform the activity.

(b) *Exemption provision*. The Administrator may exempt a new marine engine from compliance with §91.1103 upon such terms and conditions as the Administrator may find necessary for the purpose of export, research, investigations, studies, demonstrations, or training, or for reasons of national security.

(c) *Importation provision*. (1) A new marine SI engine, or vessel offered for importation or imported by a person in violation of §91.1103 shall be refused admission into the United States, but the Secretary of the Treasury and the Administrator may, by joint regulation, provide for deferring a final determination as to admission and authorizing the delivery of such a marine SI engine offered for import to the owner or consignee thereof upon such terms and conditions (including the furnishing of a bond) as may appear to them appropriate to insure that the marine SI engine will be brought into conformity with the standards, requirements, and limitations applicable to it under this part.

(2) If a marine SI engine is finally refused admission under this paragraph, the Secretary of the Treasury shall cause disposition thereof in accordance with the customs laws unless it is exported, under regulations prescribed by the Secretary, within 90 days of the date of notice of the refusal or additional time as may be permitted pursuant to the regulations.

(3) Disposition in accordance with the customs laws may not be made in such manner as may result, directly or indirectly, in the sale, to the ultimate consumer, of a new marine SI engine that fails to comply with applicable standards of the Administrator under this part.

(d) *Export provision*. A new marine SI engine intended solely for export, and so labeled or tagged on the outside of the container and on the engine itself, shall be subject to the provisions of §91.1103, except that if the country that is to receive the engine has emission standards that differ from the standards prescribed under subpart B of this part, then the engine must comply with the standards of the country that is to receive the engine.

§91.1105 Injunction proceedings for prohibited acts.

(a) The district courts of the United States have jurisdiction to restrain violations of §91.1103.

(b) Actions to restrain such violations must be brought by and in the name of the United States. In an action, subpoenas for witnesses who are required to attend a district court in any district may run into any other district.

§91.1106 Penalties.

(a) *Violations*. A violation of the requirements of this subpart is a violation of the applicable provisions of the Act, including sections 203 and 213(d), and is subject to the penalty provisions thereunder.

(1) A person who violates §91.1103 (a)(1), (a)(4), or (a)(5), or a manufacturer or dealer who violates §91.1103(a)(3)(i), is subject to a civil penalty of not more than $25,000 for each violation.

(2) A person other than a manufacturer or dealer who violates §91.1103(a)(3)(i) or any person who violates §91.1103(a)(3)(ii) is subject to a civil penalty of not more than $2,500 for each violation.

(3) A violation with respect to §91.1103 (a)(1), (a)(3)(i), (a)(4), or (a)(5) constitutes a separate offense with respect to each marine SI engine.

(4) A violation with respect to §91.1103(a)(3)(ii) constitutes a separate offense with respect to each part or component. Each day of a violation with respect to §91.1103(a)(6) constitutes a separate offense.

(5) A person who violates §91.1103 (a)(2) or (a)(6) is subject to a civil penalty of not more than $25,000 per day of violation.

(b) *Civil actions*. The Administrator may commence a civil action to assess and recover any civil penalty under paragraph (a) of this section.

(1) An action under this paragraph may be brought in the district court of

the United States for the district in which the violation is alleged to have occurred or in which the defendant resides or has the Administrator's principal place of business, and the court shall have jurisdiction to assess a civil penalty.

(2) In determining the amount of a civil penalty to be assessed under this paragraph, the court is to take into account the gravity of the violation, the economic benefit or savings (if any) resulting from the violation, the size of the violator's business, the violator's history of compliance with Title II of the Act, action taken to remedy the violation, the effect of the penalty on the violator's ability to continue in business, and such other matters as justice may require.

(3) In any such action, subpoenas for witnesses who are required to attend a district court in any district may run into any other district.

(c) *Administrative assessment of certain penalties*—(1) *Administrative penalty authority*. In lieu of commencing a civil action under paragraph (b) of this section, the Administrator shall assess any civil penalty prescribed in paragraph (a) of this section, except that the maximum amount of penalty sought against each violator in a penalty assessment proceeding can not exceed $200,000, unless the Administrator and the Attorney General jointly determine that a matter involving a larger penalty amount is appropriate for administrative penalty assessment. Any such determination by the Administrator and the Attorney General is not subject to judicial review. Assessment of a civil penalty is made by an order made on the record after opportunity for a hearing held in accordance with the procedures found at part 22 of this chapter. The Administrator may compromise, or remit, with or without conditions, any administrative penalty which may be imposed under this section.

(2) *Determining amount*. In determining the amount of any civil penalty assessed under this subsection, the Administrator is to take into account the gravity of the violation, the economic benefit or savings (if any) resulting from the violation, the size of the violator's business, the violator's history of compliance with Title II of the Act, action taken to remedy the violation, the effect of the penalty on the violator's ability to continue in business, and such other matters as justice may require.

(3) *Effect of administrator's action*. (i) Action by the Administrator under this paragraph does not affect or limit the Administrator's authority to enforce any provisions of this part; except that any violation with respect to which the Administrator has commenced and is diligently prosecuting an action under this part, or for which the Administrator has issued a final order not subject to further judicial review and for which the violator has paid a penalty assessment under this part may not be the subject of a civil penalty action under paragraph (b) of this section.

(ii) No action by the Administrator under this part affects a person's obligation to comply with a section of this part.

(4) *Finality of order*. An order issued under this subsection is to become final 30 days after its issuance unless a petition for judicial review is filed under paragraph (c)(5) of this section.

(5) *Judicial review*. (i) A person against whom a civil penalty is assessed in accordance with this subsection may seek review of the assessment in the United States District Court for the District of Columbia or for the district in which the violation is alleged to have occurred, in which such person resides, or where the person's principle place of business is located, within the 30-day period beginning on the date a civil penalty order is issued. The person must simultaneously send a copy of the filing by certified mail to the Administrator and the Attorney General.

(ii) The Administrator must file in the court within 30 days a certified copy, or certified index, as appropriate, of the record on which the order was issued. The court is not to set aside or remand any order issued in accordance with the requirements of this paragraph unless substantial evidence does not exist in the record, taken as a whole, to support the finding of a violation or unless the Administrator's assessment of the penalty constitutes an abuse of discretion, and the court is

not to impose additional civil penalties unless the Administrator's assessment of the penalty constitutes an abuse of discretion. In any proceedings, the United States may seek to recover civil penalties assessed under this section.

(6) *Collection*. (i) If any person fails to pay an assessment of a civil penalty imposed by the Administrator as provided in this part after the order making the assessment has become final or after a court in an action brought under paragraph (c)(5) of this section has entered a final judgment in favor of the Administrator, the Administrator is to request that the Attorney General bring a civil action in an appropriate district court to recover the amount assessed (plus interest at rates established pursuant to section 6621(a)(2) of the Internal Revenue Code of 1986 from the date of the final order or the date of final judgment, as the case may be). In such an action, the validity, amount, and appropriateness of the penalty is not subject to review.

(ii) A person who fails to pay on a timely basis the amount of an assessment of a civil penalty as described in paragraph (c)(6)(i) of this section is required to pay, in addition to that amount and interest, the United States' enforcement expenses, including attorney's fees and costs for collection proceedings, and a quarterly nonpayment penalty for each quarter during which the failure to pay persists. The nonpayment penalty is an amount equal to 10 percent of the aggregate amount of that person's penalties and nonpayment penalties which are unpaid as of the beginning of such quarter.

§91.1107 Warranty provisions.

(a) The manufacturer of each marine SI engine must warrant to the ultimate purchaser and each subsequent purchaser that the engine is designed, built, and equipped so as to conform at the time of sale with applicable regulations under section 213 of the Act, and is free from defects in materials and workmanship which cause such engine to fail to conform with applicable regulations for its warranty period (as determined under §91.1203).

(b) In the case of an engine part, the manufacturer or rebuilder of the part may certify according to §85.2112 of this chapter that use of the part will not result in a failure of the engine to comply with emission standards promulgated in this part.

(c) For the purposes of this section, the owner of any engine warranted under this part is responsible for the proper maintenance of the engine. Proper maintenance includes replacement and service, at the owner's expense at a service establishment or facility of the owner's choosing, such items as spark plugs, points, condensers, and any other part, item, or device related to emission control (but not designed for emission control) under the terms of the last sentence of section 207(a)(3) of the Act, unless such part, item, or device is covered by any warranty not mandated by this Act.

§91.1108 In-use compliance provisions.

(a) Effective with respect to marine engine and vessels manufactured during model years 1997 and after:

(1) If the Administrator determines that a substantial number of any class or category of engines, although properly maintained and used, do not conform to the regulations prescribed under section 213 of the Act when in actual use throughout their useful life (as defined under §91.105(a)), the Administrator shall immediately notify the manufacturer of such nonconformity and require the manufacturer to submit a plan for remedying the nonconformity of the engines with respect to which such notification is given.

(i) The manufacturer's plan shall provide that the nonconformity of any such engines which are properly used and maintained will be remedied at the expense of the manufacturer.

(ii) If the manufacturer disagrees with such determination of nonconformity and so advises the Administrator, the Administrator shall afford the manufacturer and other interested persons an opportunity to present their views and evidence in support thereof at a public hearing. Unless, as a result of such hearing, the Administrator withdraws such determination of nonconformity, the Administrator shall, within 60 days after the completion of such hearing, order the manufacturer to provide prompt notification of such

nonconformity in accordance with paragraph (a)(2) of this section. The manufacturer shall comply in all respects with the requirements of subpart I of this part.

(2) Any notification required to be given by the manufacturer under paragraph (a)(1) of this section with respect to any class or category of engines shall be given to dealers, ultimate purchasers, and subsequent purchasers (if known) in such manner and containing such information as required in subparts I and J of this part.

(3)(i) The manufacturer shall furnish with each new engine written instructions for the proper maintenance and use of the engine by the ultimate purchaser as required under § 91.1204. The manufacturer shall provide in boldface type on the first page of the written maintenance instructions notice that maintenance, replacement, or repair of the emission control devices and systems may be performed by any engine repair establishment or individual using any engine part which has been certified as provided in § 91.1107(b).

(ii) The instruction under paragraph (a)(3)(i) of this section must not include any condition on the ultimate purchaser's using, in connection with such engine, any component or service (other than a component or service provided without charge under the terms of the purchase agreement) which is identified by brand, trade, or corporate name. Subject instructions also must not directly or indirectly distinguish between service performed by the franchised dealers of such manufacturer, or any other service establishments with which such manufacturer has a commercial relationship, and service performed by independent engine repair facilities with which such manufacturer has no commercial relationship.

(iii) The prohibition of paragraph (a)(3)(ii) of this section may be waived by the Administrator if:

(A) The manufacturer satisfies the Administrator that the engine will function properly only if the component or service so identified is used in connection with such engine, and

(B) The Administrator finds that such a waiver is in the public interest.

(iv) In addition, the manufacturer shall indicate by means of a label or tag permanently affixed to the engine that the engine is covered by a certificate of conformity issued for the purpose of assuring achievement of emission standards prescribed under section 213 of the Act. This label or tag shall also contain information relating to control of emissions as prescribed under § 91.113.

(b) The manufacturer bears all cost obligation a dealer incurs as a result of a requirement imposed by paragraph (a) of this section. The transfer of any such cost obligation from a manufacturer to a dealer through franchise or other agreement is prohibited.

(c) If a manufacturer includes in an advertisement a statement respecting the cost or value of emission control devices or systems, the manufacturer shall set forth in the statement the cost or value attributed to these devices or systems by the Secretary of Labor (through the Bureau of Labor Statistics). The Secretary of Labor, and his or her representatives, has the same access for this purpose to the books, documents, papers, and records of a manufacturer as the Comptroller General has to those of a recipient of assistance for purposes of section 311 of the Act.

(d) Any inspection of a engine for purposes of paragraph (a)(1) of this section, after its sale to the ultimate purchaser, is to be made only if the owner of such vehicle or engine voluntarily permits such inspection to be made, except as may be provided by any state or local inspection program.

Subpart M—Emission Warranty and Maintenance Instructions

§ 91.1201 Applicability.

The requirements of this subpart M are applicable to all engines subject to the provisions of subpart A of this part 91.

§ 91.1202 Definitions.

The definitions of subpart A of this part apply to this subpart.

§91.1203 Emission warranty, warranty period.

(a) Warranties imposed by this subpart shall be phased in according to the following schedule.

(1) For model years 1998–2000, and for MY 1997 engine families certified pursuant to §91.205, all emission related components shall be warranted for a period of one year of engine use.

(2) For model years 2001–2003:

(i) Emission related components shall be warranted for a period of one year of engine use.

(ii) Specified major emission control components shall be warranted for a period of three years or 200 hours of engine use, whichever occurs first.

(3) For model years 2004 and beyond:

(i) Emission-related components shall be warranted for a period of two years or 200 hours of engine use, whichever occurs first.

(ii) Specified major emission control components shall be warranted for a period of three years or 200 hours of engine use, whichever occurs first.

(b) The manufacturer of each new marine SI engine must warrant to the ultimate purchaser and each subsequent purchaser, that the engine is designed, built, and equipped so as to conform at the time of sale with applicable regulations under section 213 of the Act, and the engine is free from defects in materials and workmanship which cause such engine to fail to conform with applicable regulations for its warranty period.

(c) In the case of a marine SI engine part, the manufacturer or rebuilder of the part may certify according to §85.2112 ot this chapter that use of the part will not result in a failure of the engine to comply with emission standards promulgated in this part.

(d) For the purposes of this section, the owner of any marine SI engine warranted under this part is responsible for the proper maintenance of the engine as stated in the manufacturer's written instructions. Proper maintenance generally includes replacement and service, at the owner's expense at a service establishment or facility of the owner's choosing, such items as spark plugs, points, condensers, and any other part, item, or device related to emission control (but not designed for emission control) under the terms of the last sentence of section 207(a)(3) of the Act, unless such part, item, or device is covered by any warranty not mandated by this Act.

§91.1204 Furnishing of maintenance and use instructions to ultimate purchaser.

(a) The manufacturer must furnish or cause to be furnished to the ultimate purchaser of each new marine SI engine written instructions for the maintenance and use needed to assure proper functioning of the emission control system.

(b) The manufacturer must provide in boldface type on the first page of the written maintenance instructions notice that maintenance, replacement, or repair of the emission control devices and systems may be performed by any marine SI engine repair establishment or individual.

(c) The instructions under paragraph (a) of this section will not include any condition on the ultimate purchaser's using, in connection with such engine, any component or service (other than a component or service provided without charge under the terms of the purchase agreement) which is identified by brand, trade, or corporate name. Such instructions also will not directly or indirectly distinguish between service performed by the franchised dealers of such manufacturer or any other service establishments with which such manufacturer has a commercial relationship and service performed by independent marine engine repair facilities which such manufacturer has no commercial relationship.

(d) The prohibition of paragraph (c) of this section may be waived by the Administrator if:

(1) The manufacturer satisfies the Administrator that the engine will function properly only if the component or service so identified is used in connection with such engine, and

(2) The Administrator finds that such a waiver is in the public interest.

Subpart N—In-Use Credit Program for New Marine Engines

§ 91.1301 Applicability.

Marine SI engines subject to the provisions of subpart A of this part 91 are eligible to participate in the in-use credit program described in this subpart.

§ 91.1302 Definitions.

The definitions in subpart A of this part apply to this subpart. The following definitions shall also apply to this subpart:

Averaging means the exchange of marine engine in-use emission credits among engine families within a given manufacturer's product line.

Banking means the retention of marine engine in-use emission credits by the manufacturer generating the emission credits for use in future model year averaging or trading as permitted by these regulations.

Carry-over engine family means an engine family which undergoes certification using carryover test data from previous model years. See § 91.118(c).

Emission credits or in-use credits represent the amount of emission reduction or exceedance, for each regulated pollutant, by a marine engine family below or above, respectively, the applicable certification family emission limit (FEL) to which the engine family is certified. Emission reductions below the FEL are considered ''positive credits,'' while emission exceedances above the FEL are considered ''negative or required credits.''

Banked credits refer to positive emission credits based on actual applicable production/sales volume as contained in the end of model year in-use testing reports submitted to EPA. Some or all of these banked credits may be revoked if EPA review of the end of model year in-use testing reports or any subsequent audit action(s) uncovers problems or errors.

Trading means the exchange of marine SI engine in-use emission credits between manufacturers and/or brokers.

Compliance level for an engine family is determined by averaging the in-use test results from each engine.

§ 91.1303 General provisions.

(a) The in-use credit program for eligible marine engines is described in this subpart. Participation in this program is voluntary.

(b) A marine SI engine family is eligible to participate in the in-use credit program if it is subject to regulation under subpart B of this part with certain exceptions specified in paragraph (c) of this section.

(c) Marine SI engines may not participate in the in-use averaging, banking, and trading program if they are delivered to a ''point of first retail sale'' outside of the U.S., as defined in § 91.202.

(d) Credits generated and used in the marine engine certification averaging, banking, and trading program pursuant to the provisions of subpart C of this part are not interchangeable with credits generated and used in the marine engine in-use credit program.

(e) An engine family with a compliance level, as determined by in-use testing pursuant to subpart I of this part and paragraph (h) of this section, below the applicable FEL to which the engine family is certified may generate emission credits for averaging, banking, or trading in the in-use credit program.

(f) Positive credits generated in a given model year may be used in that model year and/or in any subsequent model year.

(g) A manufacturer of an engine family with a compliance level exceeding the applicable FEL to which the engine family is certified, may, prior to the date of the report required under paragraph (j) of this section use previously banked credits, purchase credits from another manufacturer, or perform additional testing pursuant to paragraph (i) of this section to address (as calculated elsewhere in this subpart) the associated credit deficit (negative credits or a need for credits).

(h) A manufacturer may carry-over an in-use credit deficit up to and including model year 2003. Beginning with model year 2004, all manufacturers must have a zero or positive credit balance.

(i) A manufacturer must notify EPA of plans to test additional engine families beyond the maximum 25 percent

required in subpart I of this part for the in-use testing program. Such notice must be submitted 30 days prior to initiation of service accumulation. EPA may approve, with adequate justification, the use of an existing fleet for additional testing. If the additional testing discovers an engine family to be in noncompliance with the applicable FEL, the testing must be treated as if it were a failure of the normal in-use testing requirement of an engine family.

(j) Manufacturers must demonstrate a zero or positive credit balance under the in-use credit program for a particular model year within 90 days of the end of the in-use testing of that model year's engine families, or at the same time as the final certification AB&T report (required under §91.210), whichever is later.

§91.1304 Averaging.

(a) A manufacturer may use averaging across engine families to demonstrate a zero or positive credit balance for a model year. Positive credits to be used in averaging may be obtained from credits generated by another engine family of the same model year, credits banked in previous model years, or credits obtained through trading.

(b) Beginning in model year 2004, credits used to demonstrate a zero or positive credit balance must be used at a rate of 1.1 to 1.

§91.1305 Banking.

(a) A manufacturer of a marine SI engine family with an in-use compliance level below the applicable FEL to which the engine family is certified for a given model year may bank positive in-use credits for that model year for use in in-use averaging and trading.

(b) A manufacturer may consider credits banked 30 days after the submission of the report required by §91.1309(a). During the 30 day period EPA will work with the manufacturer to correct any error in calculating banked credits, if necessary.

§91.1306 Trading.

(a) A marine engine manufacturer may exchange positive in-use emission credits with other marine engine manufacturers through trading.

(b) In-use credits for trading can be obtained from credits banked for model years prior to the model year of the engine family requiring in-use credits.

(c) Traded in-use credits can be used for averaging, banking, or further trading transactions.

(d) Unless otherwise approved by EPA, a manufacturer that generates positive in-use credits must wait 30 days after it has both completed in-use testing for the model year for which the credits were generated and submitted the report required by §91.1309(a) before it may transfer credits to another manufacturer or broker.

(e) In the event of a negative credit balance resulting from a transaction, both the buyer and the seller are liable, except in cases involving fraud. Engine families participating in a negative trade may be subject to recall under subpart I of this part.

§91.1307 Credit calculation.

For each participating engine family, emission credits (positive or negative) are to be calculated according to the following equation and rounded, in accordance with ASTM E29–93a, to the nearest gram. ASTM E29–93a has been incorporated by reference. See §91.6. Consistent units are to be used throughout the equation. The following equation is used to determine the credit status for an engine family whether generating positive or negative in-use emission credits:

$$\sum_{t=1}^{\text{max useful life}} \frac{S(t) \times \text{sales} \times (\text{FEL} - \text{CL}) \times \text{Power} \times \text{AF} \times 0.207 \times \mu_{\text{use}}}{1.03^{t}}$$

Where:

S(t)=cumulative fraction survived at time t;

μ_{life}=average useful life in years, specific to the power rating and the application as given below.

Engine type	(μ_{life})
Outboard	$41.27 \times \left(\frac{Power}{0.746}\right)^{-0.204}$
Personal Watercraft	10

Power=the average power of an engine family in kW (sales weighted). The power of each configuration is the rated output in kilowatts as determined by SAE J1228. This procedure has been incorporated by reference. See §91.6.

t=time in model years

max useful life=maximum useful life specific to the power rating and the application; max useful life = $2\mu_{life}$

sales = the number of eligible sales tracked to the point of first retail sale in the U.S. for the given engine family during the model year.

FEL=the family emission limit for the engine family in grams per kilowatt hour.

CL=compliance level of the in-use testing in g/kW–hr.

μ_{use}=mean use in hours per year. For outboard engines, μ_{use}=34.8 hrs /yr. For personal watercraft, μ_{use}=77.3 hrs/yr;

AF=adjustment factor for the number of tests conducted

No. eng. tested	2*, 4	6	8	10
Adjustment factor ..	.5	.75	.9	1

*Small volume manufacturer

§ 91.1308 Maintenance of records.

(a) Any manufacturer that is participating in the in-use credit program set forth in this subpart shall establish, maintain, and retain the records required by §91.209 with respect to its participation in the in-use credit program.

(b) EPA may void *ab initio* a certificate of conformity for an engine family for which the manufacturer fails to retain the records required under this section or to provide such information to the Administrator upon request.

§ 91.1309 Reporting requirements.

(a) Any manufacturer who participates in the in-use credit program is required to submit an end of the model year in-use testing report either within 90 days of the end of the model year in-use testing of a given model year's engine families, or at the same time as the final certification AB&T report (required under §91.210), whichever is later. The end of the model year in-use testing report must contain the required information and show the calculated credits from all the in-use testing conducted by the manufacturer for a given model year.

(b) Reports shall be submitted to: Manager, Engine Compliance Programs Group 6403–J, U.S. Environmental Protection Agency, 401 M Street, SW., Washington, DC 20460.

(c) A manufacturer that fails to submit a timely report as required in paragraph (a) of this section will be considered to not have participated in the in-use credit program.

(d) If EPA or the manufacturer determines that a reporting error occurred on an end of model year report previously submitted to EPA under this subpart, or an engine family in-use testing report submitted to EPA under subpart I, the manufacturer's credits and credit calculations will be recalculated. Erroneous positive credits will be void. Erroneous negative credits may be adjusted by EPA. An update of previously submitted ''point of first retail sale'' information is not considered an error and no increase in the number of credits will be allowed unless an actual error occurred in the calculation of credits due to an error in the ''point of first retail sale'' information from the time of the original end of model year report.

§ 91.1310 Notice of opportunity for hearing.

Any voiding of an engine family's certificate of conformity under §91.1308(b) of this subpart will occur only after the manufacturer concerned has been offered an opportunity for a hearing conducted in accordance with §§91.512, 91.513, 91.514 and 91.515.

PART 93—DETERMINING CONFORMITY OF FEDERAL ACTIONS TO STATE OR FEDERAL IMPLEMENTATION PLANS

Subpart A—Conformity to State or Federal Implementation Plans of Transportation Plans, Programs, and Projects Developed, Funded or Approved Under Title 23 U.S.C. or the Federal Transit Act

Sec.
93.100 Purpose.
93.101 Definitions.
93.102 Applicability.
93.103 Priority.
93.104 Frequency of conformity determinations.
93.105 Consultation.
93.106 Content of transportation plans.
93.107 Relationship of transportation plan and TIP conformity with the NEPA process.
93.108 Fiscal constraints for transportation plans and TIPs.
93.109 Criteria and procedures for determining conformity of transportation plans, programs, and projects: General.
93.110 Criteria and procedures: Latest planning assumptions.
93.111 Criteria and procedures: Latest emissions model.
93.112 Criteria and procedures: Consultation.
93.113 Criteria and procedures: Timely implementation of TCMs.
93.114 Criteria and procedures: Currently conforming transportation plan and TIP.
93.115 Criteria and procedures: Projects from a plan and TIP.
93.116 Criteria and procedures: Localized CO and PM_{10} violations (hot spots).
93.117 Criteria and procedures: Compliance with PM_{10} control measures.
93.118 Criteria and procedures: Motor vehicle emissions budget (transportation plan).
93.119 Criteria and procedures: Motor vehicle emissions budget (TIP).
93.120 Criteria and procedures: Motor vehicle emissions budget (project not from a plan and TIP).
93.121 Criteria and procedures: Localized CO violations (hot spots) in the interim period.
93.122 Criteria and procedures: Interim period reductions in ozone and CO areas (transportation plan).
93.123 Criteria and procedures: Interim period reductions in ozone and CO areas (TIP).
93.124 Criteria and procedures: Interim period reductions for ozone and CO areas (project not from a plan and TIP).
93.125 Criteria and procedures: Interim period reductions for PM_{10} and NO_2 areas (transportation plan).
93.126 Criteria and procedures: Interim period reductions for PM_{10} and NO_2 areas (TIP).
93.127 Criteria and procedures: Interim period reductions for PM_{10} and NO_2 areas (project not from a plan and TIP).
93.128 Transition from the interim period to the control strategy period.
93.129 Requirements for adoption or approval of projects by other recipients of funds designated under title 23 U.S.C. or the Federal Transit Act.
93.130 Procedures for determining regional transportation-related emissions.
93.131 Procedures for determining localized CO and PM_{10} concentrations (hot-spot analysis).
93.132 Using the motor vehicle emissions budget in the applicable implementation plan (or implementation plan submission).
93.133 Enforceability of design concept and scope and project-level mitigation and control measures.
93.134 Exempt projects.
93.135 Projects exempt from regional emissions analyses.
93.136 Special provisions for nonattainment areas which are not required to demonstrate reasonable further progress and attainment.

Subpart B—Determining Conformity of General Federal Actions to State or Federal Implementation Plans

93.150 Prohibition.
93.151 State implementation plan (SIP) revision.
93.152 Definitions.
93.153 Applicability.
93.154 Conformity analysis.
93.155 Reporting requirements.
93.156 Public participation.
93.157 Frequency of conformity determinations.
93.158 Criteria for determining conformity of general Federal actions.
93.159 Procedures for conformity determinations of general Federal actions.
93.160 Mitigation of air quality impacts.

AUTHORITY: 42 U.S.C. 7401–7671q.

SOURCE: 58 FR 62235, Nov. 24, 1993, unless otherwise noted.

Subpart A—Conformity to State or Federal Implementation Plans of Transportation Plans, Programs, and Projects Developed, Funded or Approved Under Title 23 U.S.C. or the Federal Transit Act

§ 93.100 Purpose.

The purpose of this subpart is to implement section 176(c) of the Clean Air Act (CAA), as amended (42 U.S.C. 7401 *et seq.*), and the related requirements of 23 U.S.C. 109(j), with respect to the conformity of transportation plans, programs, and projects which are developed, funded, or approved by the United States Department of Transportation (DOT), and by metropolitan planning organizations (MPOs) or other recipients of funds under title 23 U.S.C. or the Federal Transit Act (49 U.S.C. 1601 *et seq.*). This subpart sets forth policy, criteria, and procedures for demonstrating and assuring conformity of such activities to an applicable implementation plan developed pursuant to section 110 and part D of the CAA.

§ 93.101 Definitions.

Terms used but not defined in this subpart shall have the meaning given them by the CAA, titles 23 and 49 U.S.C., other Environmental Protection Agency (EPA) regulations, or other DOT regulations, in that order of priority.

Applicable implementation plan is defined in section 302(q) of the CAA and means the portion (or portions) of the implementation plan, or most recent revision thereof, which has been approved under section 110, or promulgated under section 110(c), or promulgated or approved pursuant to regulations promulgated under section 301(d) and which implements the relevant requirements of the CAA.

CAA means the Clean Air Act, as amended.

Cause or contribute to a new violation for a project means:

(1) To cause or contribute to a new violation of a standard in the area substantially affected by the project or over a region which would otherwise not be in violation of the standard during the future period in question, if the project were not implemented, or

(2) To contribute to a new violation in a manner that would increase the frequency or severity of a new violation of a standard in such area.

Control strategy implementation plan revision is the applicable implementation plan which contains specific strategies for controlling the emissions of and reducing ambient levels of pollutants in order to satisfy CAA requirements for demonstrations of reasonable further progress and attainment (CAA sections 182(b)(1), 182(c)(2)(A), 182(c)(2)(B), 187(a)(7), 189(a)(1)(B), and 189(b)(1)(A); and sections 192(a) and 192(b), for nitrogen dioxide).

Control strategy period with respect to particulate matter less than 10 microns in diameter (PM_{10}), carbon monoxide (CO), nitrogen dioxide (NO_2), and/or ozone precursors (volatile organic compounds and oxides of nitrogen), means that period of time after EPA approves control strategy implementation plan revisions containing strategies for controlling PM_{10}, NO_2, CO, and/or ozone, as appropriate. This period ends when a State submits and EPA approves a request under section 107(d) of the CAA for redesignation to an attainment area.

Design concept means the type of facility identified by the project, e.g., freeway, expressway, arterial highway, grade-separated highway, reserved right-of-way rail transit, mixed-traffic rail transit, exclusive busway, etc.

Design scope means the design aspects which will affect the proposed facility's impact on regional emissions, usually as they relate to vehicle or person carrying capacity and control, e.g., number of lanes or tracks to be constructed or added, length of project, signalization, access control including approximate number and location of interchanges, preferential treatment for high-occupancy vehicles, etc.

DOT means the United States Department of Transportation.

EPA means the Environmental Protection Agency.

FHWA means the Federal Highway Administration of DOT.

FHWA/FTA project, for the purpose of this subpart, is any highway or transit project which is proposed to receive

funding assistance and approval through the Federal-Aid Highway program or the Federal mass transit program, or requires Federal Highway Administration (FHWA) or Federal Transit Administration (FTA) approval for some aspect of the project, such as connection to an interstate highway or deviation from applicable design standards on the interstate system.

FTA means the Federal Transit Administration of DOT.

Forecast period with respect to a transportation plan is the period covered by the transportation plan pursuant to 23 CFR part 450.

Highway project is an undertaking to implement or modify a highway facility or highway-related program. Such an undertaking consists of all required phases necessary for implementation. For analytical purposes, it must be defined sufficiently to:

(1) Connect logical termini and be of sufficient length to address environmental matters on a broad scope;

(2) Have independent utility or significance, i.e., be usable and be a reasonable expenditure even if no additional transportation improvements in the area are made; and

(3) Not restrict consideration of alternatives for other reasonably foreseeable transportation improvements.

Horizon year is a year for which the transportation plan describes the envisioned transportation system according to § 93.106.

Hot-spot analysis is an estimation of likely future localized CO and PM_{10} pollutant concentrations and a comparison of those concentrations to the national ambient air quality standards. Pollutant concentrations to be estimated should be based on the total emissions burden which may result from the implementation of a single, specific project, summed together with future background concentrations (which can be estimated using the ratio of future to current traffic multiplied by the ratio of future to current emission factors) expected in the area. The total concentration must be estimated and analyzed at appropriate receptor locations in the area substantially affected by the project. Hot-spot analysis assesses impacts on a scale smaller than the entire nonattainment or maintenance area, including, for example, congested roadway intersections and highways or transit terminals, and uses an air quality dispersion model to determine the effects of emissions on air quality.

Incomplete data area means any ozone nonattainment area which EPA has classified, in 40 CFR part 81, as an incomplete data area.

Increase the frequency or severity means to cause a location or region to exceed a standard more often or to cause a violation at a greater concentration than previously existed and/or would otherwise exist during the future period in question, if the project were not implemented.

ISTEA means the Intermodal Surface Transportation Efficiency Act of 1991.

Maintenance area means any geographic region of the United States previously designated nonattainment pursuant to the CAA Amendments of 1990 and subsequently redesignated to attainment subject to the requirement to develop a maintenance plan under section 175A of the CAA, as amended.

Maintenance period with respect to a pollutant or pollutant precursor means that period of time beginning when a State submits and EPA approves a request under section 107(d) of the CAA for redesignation to an attainment area, and lasting for 20 years, unless the applicable implementation plan specifies that the maintenance period shall last for more than 20 years.

Metropolitan planning organization (MPO) is that organization designated as being responsible, together with the State, for conducting the continuing, cooperative, and comprehensive planning process under 23 U.S.C. 134 and 49 U.S.C. 1607. It is the forum for cooperative transportation decision- making.

Milestone has the meaning given in sections 182(g)(1) and 189(c) of the CAA. A milestone consists of an emissions level and the date on which it is required to be achieved.

Motor vehicle emissions budget is that portion of the total allowable emissions defined in a revision to the applicable implementation plan (or in an implementation plan revision which was endorsed by the Governor or his or her designee, subject to a public hearing, and submitted to EPA, but not yet

approved by EPA) for a certain date for the purpose of meeting reasonable further progress milestones or attainment or maintenance demonstrations, for any criteria pollutant or its precursors, allocated by the applicable implementation plan to highway and transit vehicles. The applicable implementation plan for an ozone nonattainment area may also designate a motor vehicle emissions budget for oxides of nitrogen (NO_X) for a reasonable further progress milestone year if the applicable implementation plan demonstrates that this NO_X budget will be achieved with measures in the implementation plan (as an implementation plan must do for VOC milestone requirements). The applicable implementation plan for an ozone nonattainment area includes a NO_X budget if NO_X reductions are being substituted for reductions in volatile organic compounds in milestone years required for reasonable further progress.

National ambient air quality standards (NAAQS) are those standards established pursuant to section 109 of the CAA.

NEPA means the National Environmental Policy Act of 1969, as amended (42 U.S.C. 4321 *et seq.*).

NEPA process completion, for the purposes of this subpart, with respect to FHWA or FTA, means the point at which there is a specific action to make a determination that a project is categorically excluded, to make a Finding of No Significant Impact, or to issue a record of decision on a Final Environmental Impact Statement under NEPA.

Nonattainment area means any geographic region of the United States which has been designated as nonattainment under section 107 of the CAA for any pollutant for which a national ambient air quality standard exists.

Not classified area means any carbon monoxide nonattainment area which EPA has not classified as either moderate or serious.

Phase II of the interim period with respect to a pollutant or pollutant precursor means that period of time after the effective date of this rule, lasting until the earlier of the following: submission to EPA of the relevant control strategy implementation plan revisions which have been endorsed by the Governor (or his or her designee) and have been subject to a public hearing, or the date that the Clean Air Act requires relevant control strategy implementation plans to be submitted to EPA, provided EPA has notified the State, MPO, and DOT of the State's failure to submit any such plans. The precise end of Phase II of the interim period is defined in § 93.128.

Project means a highway project or transit project.

Protective finding means a determination by EPA that the control strategy contained in a submitted control strategy implementation plan revision would have been considered approvable with respect to requirements for emissions reductions if all committed measures had been submitted in enforceable form as required by Clean Air Act section 110(a)(2)(A).

Recipient of funds designated under title 23 U.S.C. or the Federal Transit Act means any agency at any level of State, county, city, or regional government that routinely receives title 23 U.S.C. or Federal Transit Act funds to construct FHWA/FTA projects, operate FHWA/FTA projects or equipment, purchase equipment, or undertake other services or operations via contracts or agreements. This definition does not include private landowners or developers, or contractors or entities that are only paid for services or products created by their own employees.

Regionally significant project means a transportation project (other than an exempt project) that is on a facility which serves regional transportation needs (such as access to and from the area outside of the region, major activity centers in the region, major planned developments such as new retail malls, sports complexes, etc., or transportation terminals as well as most terminals themselves) and would normally be included in the modeling of a metropolitan area's transportation network, including at a minimum all principal arterial highways and all fixed guideway transit facilities that offer an alternative to regional highway travel.

Rural transport ozone nonattainment area means an ozone nonattainment area that does not include, and is not

adjacent to, any part of a Metropolitan Statistical Area or, where one exists, a Consolidated Metropolitan Statistical Area (as defined by the United States Bureau of the Census) and is classified under Clean Air Act section 182(h) as a rural transport area.

Standard means a national ambient air quality standard.

Submarginal area means any ozone nonattainment area which EPA has classified as submarginal in 40 CFR part 81.

Transit is mass transportation by bus, rail, or other conveyance which provides general or special service to the public on a regular and continuing basis. It does not include school buses or charter or sightseeing services.

Transit project is an undertaking to implement or modify a transit facility or transit-related program; purchase transit vehicles or equipment; or provide financial assistance for transit operations. It does not include actions that are solely within the jurisdiction of local transit agencies, such as changes in routes, schedules, or fares. It may consist of several phases. For analytical purposes, it must be defined inclusively enough to:

(1) Connect logical termini and be of sufficient length to address environmental matters on a broad scope;

(2) Have independent utility or independent significance, i.e., be a reasonable expenditure even if no additional transportation improvements in the area are made; and

(3) Not restrict consideration of alternatives for other reasonably foreseeable transportation improvements.

Transitional area means any ozone nonattainment area which EPA has classified as transitional in 40 CFR part 81.

Transitional period with respect to a pollutant or pollutant precursor means that period of time which begins after submission to EPA of the relevant control strategy implementation plan which has been endorsed by the Governor (or his or her designee) and has been subject to a public hearing. The transitional period lasts until EPA takes final approval or disapproval action on the control strategy implementation plan submission or finds it to be incomplete. The precise beginning and end of the transitional period is defined in §93.128.

Transportation control measure (TCM) is any measure that is specifically identified and committed to in the applicable implementation plan that is either one of the types listed in §108 of the CAA, or any other measure for the purpose of reducing emissions or concentrations of air pollutants from transportation sources by reducing vehicle use or changing traffic flow or congestion conditions. Notwithstanding the above, vehicle technology-based, fuel-based, and maintenance-based measures which control the emissions from vehicles under fixed traffic conditions are not TCMs for the purposes of this subpart.

Transportation improvement program (TIP) means a staged, multiyear, intermodal program of transportation projects covering a metropolitan planning area which is consistent with the metropolitan transportation plan, and developed pursuant to 23 CFR part 450.

Transportation plan means the official intermodal metropolitan transportation plan that is developed through the metropolitan planning process for the metropolitan planning area, developed pursuant to 23 CFR part 450.

Transportation project is a highway project or a transit project.

[58 FR 62235, Nov. 24, 1993, as amended at 60 FR 57184, Nov. 14, 1995]

§93.102 Applicability.

(a) *Action applicability*. (1) Except as provided for in paragraph (c) of this section or §93.134, conformity determinations are required for:

(i) The adoption, acceptance, approval or support of transportation plans developed pursuant to 23 CFR part 450 or 49 CFR part 613 by an MPO or DOT;

(ii) The adoption, acceptance, approval or support of TIPs developed pursuant to 23 CFR part 450 or 49 CFR part 613 by an MPO or DOT; and

(iii) The approval, funding, or implementation of FHWA/FTA projects.

(2) Conformity determinations are not required under this rule for individual projects which are not FHWA/FTA projects. However, §93.129 applies to such projects if they are regionally significant.

(b) *Geographic applicability.* (1) The provisions of this subpart shall apply in all nonattainment and maintenance areas for transportation-related criteria pollutants for which the area is designated nonattainment or has a maintenance plan.

(2) The provisions of this subpart apply with respect to emissions of the following criteria pollutants: ozone, carbon monoxide, nitrogen dioxide, and particles with an aerodynamic diameter less than or equal to a nominal 10 micrometers (PM_{10}).

(3) The provisions of this subpart apply with respect to emissions of the following precursor pollutants:

(i) Volatile organic compounds and nitrogen oxides in ozone areas;

(ii) Nitrogen oxides in nitrogen dioxide areas; and

(iii) Volatile organic compounds, nitrogen oxides, and PM_{10} in PM_{10} areas if:

(A) During the interim period, the EPA Regional Administrator or the director of the State air agency has made a finding that transportation-related precursor emissions within the nonattainment area are a significant contributor to the PM_{10} nonattainment problem and has so notified the MPO and DOT; or

(B) During the transitional, control strategy, and maintenance periods, the applicable implementation plan (or implementation plan submission) establishes a budget for such emissions as part of the reasonable further progress, attainment or maintenance strategy.

(c) *Limitations.* (1) Projects subject to this regulation for which the NEPA process and a conformity determination have been completed by FHWA or FTA may proceed toward implementation without further conformity determinations if one of the following major steps has occurred within the past three years: NEPA process completion; start of final design; acquisition of a significant portion of the right-of-way; or approval of the plans, specifications and estimates. All phases of such projects which were considered in the conformity determination are also included, if those phases were for the purpose of funding, final design, right-of-way acquisition, construction, or any combination of these phases.

(2) A new conformity determination for the project will be required if there is a significant change in project design concept and scope, if a supplemental environmental document for air quality purposes is initiated, or if no major steps to advance the project have occurred within the past three years.

(d) *Grace period for new nonattainment areas.* For areas or portions of areas which have been in attainment for either ozone, CO, PM–10, or NO_2 since 1990 and are subsequently redesignated to nonattainment for any of these pollutants, the provisions of this subpart shall not apply for such pollutant for 12 months following the date of final designation to nonattainment.

[58 FR 62235, Nov. 24, 1993, as amended at 60 FR 57184, Nov. 14, 1995]

§ 93.103 Priority.

When assisting or approving any action with air quality-related consequences, FHWA and FTA shall give priority to the implementation of those transportation portions of an applicable implementation plan prepared to attain and maintain the NAAQS. This priority shall be consistent with statutory requirements for allocation of funds among States or other jurisdictions.

§ 93.104 Frequency of conformity determinations.

(a) Conformity determinations and conformity redeterminations for transportation plans, TIPs, and FHWA/FTA projects must be made according to the requirements of this section and the applicable implementation plan.

(b) *Transportation plans.* (1) Each new transportation plan must be found to conform before the transportation plan is approved by the MPO or accepted by DOT.

(2) All transportation plan revisions must be found to conform before the transportation plan revisions are approved by MPO or accepted by DOT, unless the revision merely adds or deletes exempt projects listed in § 93.134. The conformity determination must be based on the transportation plan and the revision taken as a whole.

(3) Conformity of existing transportation plans must be redetermined

within 18 months of the following, or the existing conformity determination will lapse:

(i) November 24, 1993;

(ii) EPA approval of an implementation plan revision which:

(A) Establishes or revises a transportation-related emissions budget (as required by CAA sections 175A(a), 182(b)(1), 182(c)(2)(A), 182(c)(2)(B), 187(a)(7), 189(a)(1)(B), and 189(b)(1)(A); and sections 192(a) and 192(b), for nitrogen dioxide); or

(B) Adds, deletes, or changes TCMs; and

(iii) EPA promulgation of an implementation plan which establishes or revises a transportation-related emissions budget or adds, deletes, or changes TCMs.

(4) In any case, conformity determinations must be made no less frequently than every three years, or the existing conformity determination will lapse.

(c) *Transportation improvement programs.* (1) A new TIP must be found to conform before the TIP is approved by the MPO or accepted by DOT.

(2) A TIP amendment requires a new conformity determination for the entire TIP before the amendment is approved by the MPO or accepted by DOT, unless the amendment merely adds or deletes exempt projects listed in §93.134.

(3) After an MPO adopts a new or revised transportation plan, conformity must be redetermined by the MPO and DOT within six months from the date of adoption of the plan, unless the new or revised plan merely adds or deletes exempt projects listed in §93.134. Otherwise, the existing conformity determination for the TIP will lapse.

(4) In any case, conformity determinations must be made no less frequently than every three years or the existing conformity determination will lapse.

(d) *Projects.* FHWA/FTA projects must be found to conform before they are adopted, accepted, approved, or funded. Conformity must be redetermined for any FHWA/FTA project if none of the following major steps has occurred within the past three years: NEPA process completion; start of final design; acquisition of a significant portion of the right-of-way; or approval of the plans, specifications and estimates.

§93.105 Consultation.

(a) *General.* The implementation plan revision required under §51.396 of this chapter will include procedures for interagency consultation (Federal, State, and local), and resolution of conflicts.

(1) The implementation plan revision will include procedures to be undertaken by MPOs, State departments of transportation, and DOT with State and local air quality agencies and EPA before making conformity determinations, and by State and local air agencies and EPA with MPOs, State departments of transportation, and DOT in developing applicable implementation plans.

(2) Before the implementation plan revision is approved by EPA, MPOs and State departments of transportation before making conformity determinations must provide reasonable opportunity for consultation with State air agencies, local air quality and transportation agencies, DOT, and EPA, including consultation on the issues described in paragraph (c)(1) of this section.

(b) *Interagency consultation procedures: General factors.* (1) States will provide in the implementation plan well-defined consultation procedures whereby representatives of the MPOs, State and local air quality planning agencies, State and local transportation agencies, and other organizations with responsibilities for developing, submitting, or implementing provisions of an implementation plan required by the CAA must consult with each other and with local or regional offices of EPA, FHWA, and FTA on the development of the implementation plan, the transportation plan, the TIP, and associated conformity determinations.

(2) Interagency consultation procedures will include at a minimum the general factors listed below and the specific processes in paragraph (c) of this section:

(i) The roles and responsibilities assigned to each agency at each stage in the implementation plan development

process and the transportation planning process, including technical meetings;

(ii) The organizational level of regular consultation;

(iii) A process for circulating (or providing ready access to) draft documents and supporting materials for comment before formal adoption or publication;

(iv) The frequency of, or process for convening, consultation meetings and responsibilities for establishing meeting agendas;

(v) A process for responding to the significant comments of involved agencies; and

(vi) A process for the development of a list of the TCMs which are in the applicable implementation plan.

(c) *Interagency consultation procedures: Specific processes.* Interagency consultation procedures will also include the following specific processes:

(1) A process involving the MPO, State and local air quality planning agencies, State and local transportation agencies, EPA, and DOT for the following:

(i) Evaluating and choosing a model (or models) and associated methods and assumptions to be used in hot-spot analyses and regional emissions analyses;

(ii) Determining which minor arterials and other transportation projects should be considered ''regionally significant'' for the purposes of regional emissions analysis (in addition to those functionally classified as principal arterial or higher or fixed guideway systems or extensions that offer an alternative to regional highway travel), and which projects should be considered to have a significant change in design concept and scope from the transportation plan or TIP;

(iii) Evaluating whether projects otherwise exempted from meeting the requirements of this subpart (see §§ 93.134 and 93.135) should be treated as non-exempt in cases where potential adverse emissions impacts may exist for any reason;

(iv) Making a determination, as required by § 93.113(c)(1), whether past obstacles to implementation of TCMs which are behind the schedule established in the applicable implementation plan have been identified and are being overcome, and whether State and local agencies with influence over approvals or funding for TCMs are giving maximum priority to approval or funding for TCMs. This process shall also consider whether delays in TCM implementation necessitate revisions to the applicable implementation plan to remove TCMs or substitute TCMs or other emission reduction measures;

(v) Identifying, as required by § 93.131(d), projects located at sites in PM_{10} nonattainment areas which have vehicle and roadway emission and dispersion characteristics which are essentially identical to those at sites which have violations verified by monitoring, and therefore require quantitative PM_{10} hot-spot analysis; and

(vi) Notification of transportation plan or TIP revisions or amendments which merely add or delete exempt projects listed in § 93.134.

(2) A process involving the MPO and State and local air quality planning agencies and transportation agencies for the following:

(i) Evaluating events which will trigger new conformity determinations in addition to those triggering events established in § 93.104; and

(ii) Consulting on emissions analysis for transportation activities which cross the borders of MPOs or nonattainment areas or air basins.

(3) Where the metropolitan planning area does not include the entire nonattainment or maintenance area, a process involving the MPO and the State department of transportation for cooperative planning and analysis for purposes of determining conformity of all projects outside the metropolitan area and within the nonattainment or maintenance area.

(4) A process to ensure that plans for construction of regionally significant projects which are not FHWA/FTA projects (including projects for which alternative locations, design concept and scope, or the no-build option are still being considered), including those by recipients of funds designated under title 23 U.S.C. or the Federal Transit Act, are disclosed to the MPO on a regular basis, and to ensure that any changes to those plans are immediately disclosed;

(5) A process involving the MPO and other recipients of funds designated under title 23 U.S.C. or the Federal Transit Act for assuming the location and design concept and scope of projects which are disclosed to the MPO as required by paragraph (c)(4) of this section but whose sponsors have not yet decided these features, in sufficient detail to perform the regional emissions analysis according to the requirements of §93.130.

(6) A process for consulting on the design, schedule, and funding of research and data collection efforts and regional transportation model development by the MPO (e.g., household/travel transportation surveys).

(7) A process (including Federal agencies) for providing final documents (including applicable implementation plans and implementation plan revisions) and supporting information to each agency after approval or adoption.

(d) *Resolving conflicts.* Conflicts among State agencies or between State agencies and an MPO shall be escalated to the Governor if they cannot be resolved by the heads of the involved agencies. The State air agency has 14 calendar days to appeal to the Governor after the State DOT or MPO has notified the State air agency head of the resolution of his or her comments. The implementation plan revision required by §51.396 of this chapter shall define the procedures for starting of the 14-day clock. If the State air agency appeals to the Governor, the final conformity determination must have the concurrence of the Governor. If the State air agency does not appeal to the Governor within 14 days, the MPO or State department of transportation may proceed with the final conformity determination. The Governor may delegate his or her role in this process, but not to the head or staff of the State or local air agency, State department of transportation, State transportation commission or board, or an MPO.

(e) *Public consultation procedures.* Affected agencies making conformity determinations on transportation plans, programs, and projects shall establish a proactive public involvement process which provides opportunity for public review and comment prior to taking formal action on a conformity determination for all transportation plans and TIPs, consistent with the requirements of 23 CFR part 450. In addition, these agencies must specifically address in writing all public comments that known plans for a regionally significant project which is not receiving FHWA or FTA funding or approval have not been properly reflected in the emissions analysis supporting a proposed conformity finding for a transportation plan or TIP. These agencies shall also provide opportunity for public involvement in conformity determinations for projects where otherwise required by law.

§93.106 Content of transportation plans.

(a) *Transportation plans adopted after January 1, 1995 in serious, severe, or extreme ozone nonattainment areas and in serious carbon monoxide nonattainment areas.* The transportation plan must specifically describe the transportation system envisioned for certain future years which shall be called horizon years.

(1) The agency or organization developing the transportation plan may choose any years to be horizon years, subject to the following restrictions:

(i) Horizon years may be no more than 10 years apart.

(ii) The first horizon year may be no more than 10 years from the base year used to validate the transportation demand planning model.

(iii) If the attainment year is in the time span of the transportation plan, the attainment year must be a horizon year.

(iv) The last horizon year must be the last year of the transportation plan's forecast period.

(2) For these horizon years:

(i) The transportation plan shall quantify and document the demographic and employment factors influencing expected transportation demand, including land use forecasts, in accordance with implementation plan provisions and §93.105;

(ii) The highway and transit system shall be described in terms of the regionally significant additions or modifications to the existing transportation network which the transportation plan

envisions to be operational in the horizon years. Additions and modifications to the highway network shall be sufficiently identified to indicate intersections with existing regionally significant facilities, and to determine their effect on route options between transportation analysis zones. Each added or modified highway segment shall also be sufficiently identified in terms of its design concept and design scope to allow modeling of travel times under various traffic volumes, consistent with the modeling methods for areawide transportation analysis in use by the MPO. Transit facilities, equipment, and services envisioned for the future shall be identified in terms of design concept, design scope, and operating policies sufficiently to allow modeling of their transit ridership. The description of additions and modifications to the transportation network shall also be sufficiently specific to show that there is a reasonable relationship between expected land use and the envisioned transportation system; and

(iii) Other future transportation policies, requirements, services, and activities, including intermodal activities, shall be described.

(b) *Moderate areas reclassified to serious.* Ozone or CO nonattainment areas which are reclassified from moderate to serious must meet the requirements of paragraph (a) of this section within two years from the date of reclassification.

(c) *Transportation plans for other areas.* Transportation plans for other areas must meet the requirements of paragraph (a) of this section at least to the extent it has been the previous practice of the MPO to prepare plans which meet those requirements. Otherwise, transportation plans must describe the transportation system envisioned for the future specifically enough to allow determination of conformity according to the criteria and procedures of §§ 93.109 through 93.127.

(d) *Savings.* The requirements of this section supplement other requirements of applicable law or regulation governing the format or content of transportation plans.

§ 93.107 Relationship of transportation plan and TIP conformity with the NEPA process.

The degree of specificity required in the transportation plan and the specific travel network assumed for air quality modeling do not preclude the consideration of alternatives in the NEPA process or other project development studies. Should the NEPA process result in a project with design concept and scope significantly different from that in the transportation plan or TIP, the project must meet the criteria in §§ 93.109 through 93.127 for projects not from a TIP before NEPA process completion.

§ 93.108 Fiscal constraints for transportation plans and TIPs.

Transportation plans and TIPs must be fiscally constrained consistent with DOT's metropolitan planning regulations at 23 CFR part 450 in order to be found in conformity.

§ 93.109 Criteria and procedures for determining conformity of transportation plans, programs, and projects: General.

(a) In order to be found to conform, each transportation plan, program, and FHWA/FTA project must satisfy the applicable criteria and procedures in §§ 93.110 through 93.127 as listed in Table 1 in paragraph (b) of this section, and must comply with all applicable conformity requirements of implementation plans and of court orders for the area which pertain specifically to conformity determination requirements. The criteria for making conformity determinations differ based on the action under review (transportation plans, TIPs, and FHWA/FTA projects), the time period in which the conformity determination is made, and the relevant pollutant.

(b) The following table indicates the criteria and procedures in §§ 93.110 through 93.127 which apply for each action in each time period.

TABLE 1.—CONFORMITY CRITERIA

Action	Criteria
All Periods	
Transportation Plan	§§ 93.110, 93.111, 93.112, 93.113(b).

TABLE 1.—CONFORMITY CRITERIA—Continued

Action	Criteria
TIP	§§93.110, 93.111, 93.112, 93.113(c).
Project (From a conforming plan and TIP).	§§93.110, 93.111, 93.112, 93.114, 93.115, 93.116, 93.117.
Project (Not from a conforming plan and TIP).	§§93.110, 93.111, 93.112, 93.113(d), 93.114, 93.116, 93.117.
Phase II of the Interim Period	
Transportation Plan	§§93.122, 93.125.
TIP	§§93.123, 93.126.
Project (From a conforming plan and TIP).	§93.121.
Project (Not from a conforming plan and TIP).	§93.121, 93.124, 93.127.
Transitional Period	
Transportation Plan	§§93.118, 93.122, 93.125.
TIP	§§93.119, 93.123, 93.126.
Project (From a conforming plan and TIP).	§93.121.
Project (Not from a conforming plan and TIP).	§§93.120, 93.121, 93.124, 93.127
Control Strategy and Maintenance Periods	
Transportation Plan	§93,118.
TIP	§93.119.
Project (From a conforming plan and TIP).	No additional criteria.
Project (Not from a conforming plan and TIP).	§93.120.

93.110 The conformity determination must be based on the latest planning assumptions.

93.111 The conformity determination must be based on the latest emission estimation model available.

93.112 The MPO must make the conformity determination according to the consultation procedures of this rule and the implementation plan revision required by §51.396 of this chapter.

93.113 The transportation plan, TIP, or FHWA/FTA project which is not from a conforming plan and TIP must provide for the timely implementation of TCMs from the applicable implementation plan.

93.114 There must be a currently conforming transportation plan and currently conforming TIP at the time of project approval.

93.115 The project must come from a conforming transportation plan and program.

93.116 The FHWA/FTA project must not cause or contribute to any new localized CO or PM_{10} violations or increase the frequency or severity of any existing CO or PM_{10} violations in CO and PM_{10} nonattainment and maintenance areas.

93.117 The FHWA/FTA project must comply with PM_{10} control measures in the applicable implementation plan.

93.118 The transportation plan must be consistent with the motor vehicle emissions budget(s) in the applicable implementation plan or implementation plan submission.

93.119 The TIP must be consistent with the motor vehicle emissions budget(s) in the applicable implementation plan or implementation plan submission.

93.120 The project which is not from a conforming transportation plan and conforming TIP must be consistent with the motor vehicle emissions budget(s) in the applicable implementation plan or implementation plan submission.

93.121 The FHWA/FTA project must eliminate or reduce the severity and number of localized CO violations in the area substantially affected by the project (in CO nonattainment areas).

93.122 The transportation plan must contribute to emissions reductions in ozone and CO nonattainment areas.

93.123 The TIP must contribute to emissions reductions in ozone and CO nonattainment areas.

93.124 The project which is not from a conforming transportation plan and TIP must contribute to emissions reductions in ozone and CO nonattainment areas.

93.125 The transportation plan must contribute to emission reductions or must not increase emissions in PM_{10} and NO_2 nonattainment areas.

93.126 The TIP must contribute to emission reductions or must not increase emissions in PM_{10} and NO_2 nonattainment areas.

93.127 The project which is not from a conforming transportation plan and TIP must contribute to emission reductions or must not increase emissions in PM_{10} and NO_2 nonattainment areas.

§93.110 Criteria and procedures: Latest planning assumptions.

(a) The conformity determination, with respect to all other applicable criteria in §§93.111 through 93.127, must be based upon the most recent planning assumptions in force at the time of the conformity determination. This criterion applies during all periods. The conformity determination must satisfy the requirements of paragraphs (b) through (f) of this section.

(b) Assumptions must be derived from the estimates of current and future population, employment, travel, and congestion most recently developed by the MPO or other agency authorized to make such estimates and approved by the MPO. The conformity determination must also be based on the latest assumptions about current and future background concentrations.

(c) The conformity determination for each transportation plan and TIP must discuss how transit operating policies (including fares and service levels) and assumed transit ridership have changed since the previous conformity determination.

(d) The conformity determination must include reasonable assumptions about transit service and increases in transit fares and road and bridge tolls over time.

(e) The conformity determination must use the latest existing information regarding the effectiveness of the TCMs which have already been implemented.

(f) Key assumptions shall be specified and included in the draft documents and supporting materials used for the interagency and public consultation required by § 93.105.

§ 93.111 Criteria and procedures: Latest emissions model.

(a) The conformity determination must be based on the latest emission estimation model available. This criterion applies during all periods. It is satisfied if the most current version of the motor vehicle emissions model specified by EPA for use in the preparation or revision of implementation plans in that State or area is used for the conformity analysis. Where EMFAC is the motor vehicle emissions model used in preparing or revising the applicable implementation plan, new versions must be approved by EPA before they are used in the conformity analysis.

(b) EPA will consult with DOT to establish a grace period following the specification of any new model.

(1) The grace period will be no less than three months and no more than 24 months after notice of availability is published in the FEDERAL REGISTER.

(2) The length of the grace period will depend on the degree of change in the model and the scope of re-planning likely to be necessary by MPOs in order to assure conformity. If the grace period will be longer than three months, EPA will announce the appropriate grace period in the FEDERAL REGISTER.

(c) Conformity analyses for which the emissions analysis was begun during the grace period or before the FEDERAL REGISTER notice of availability of the latest emission model may continue to use the previous version of the model for transportation plans and TIPs. The previous model may also be used for projects if the analysis was begun during the grace period or before the FEDERAL REGISTER notice of availability, provided no more than three years have passed since the draft environmental document was issued.

§ 93.112 Criteria and procedures: Consultation.

The MPO must make the conformity determination according to the consultation procedures in this rule and in the implementation plan revision required by § 51.396 of this chapter, and according to the public involvement procedures established by the MPO in compliance with 23 CFR part 450. This criterion applies during all periods. Until the implementation plan revision required by § 51.396 of this chapter is approved by EPA, the conformity determination must be made according to the procedures in §§ 93.105(a)(2) and 93.105(e). Once the implementation plan revision has been approved by EPA, this criterion is satisfied if the conformity determination is made consistent with the implementation plan's consultation requirements.

§ 93.113 Criteria and procedures: Timely implementation of TCMs.

(a) The transportation plan, TIP, or FHWA/FTA project which is not from a conforming plan and TIP must provide for the timely implementation of TCMs from the applicable implementation plan. This criterion applies during all periods.

(b) For transportation plans, this criterion is satisfied if the following two conditions are met:

(1) The transportation plan, in describing the envisioned future transportation system, provides for the timely completion or implementation of all TCMs in the applicable implementation plan which are eligible for funding under title 23 U.S.C. or the Federal Transit Act, consistent with schedules included in the applicable implementation plan.

(2) Nothing in the transportation plan interferes with the implementation of any TCM in the applicable implementation plan.

(c) For TIPs, this criterion is satisfied if the following conditions are met:

(1) An examination of the specific steps and funding source(s) needed to fully implement each TCM indicates that TCMs which are eligible for funding under title 23 U.S.C. or the Federal Transit Act are on or ahead of the schedule established in the applicable implementation plan, or, if such TCMs are behind the schedule established in the applicable implementation plan, the MPO and DOT have determined that past obstacles to implementation of the TCMs have been identified and have been or are being overcome, and that all State and local agencies with influence over approvals or funding for TCMs are giving maximum priority to approval or funding of TCMs over other projects within their control, including projects in locations outside the nonattainment or maintenance area.

(2) If TCMs in the applicable implementation plan have previously been programmed for Federal funding but the funds have not been obligated and the TCMs are behind the schedule in the implementation plan, then the TIP cannot be found to conform if the funds intended for those TCMs are reallocated to projects in the TIP other than TCMs, or if there are no other TCMs in the TIP, if the funds are reallocated to projects in the TIP other than projects which are eligible for Federal funding under ISTEA's Congestion Mitigation and Air Quality Improvement Program.

(3) Nothing in the TIP may interfere with the implementation of any TCM in the applicable implementation plan.

(d) For FHWA/FTA projects which are not from a conforming transportation plan and TIP, this criterion is satisfied if the project does not interfere with the implementation of any TCM in the applicable implementation plan.

§93.114 Criteria and procedures: Currently conforming transportation plan and TIP.

There must be a currently conforming transportation plan and currently conforming TIP at the time of project approval. This criterion applies during all periods. It is satisfied if the current transportation plan and TIP have been found to conform to the applicable implementation plan by the MPO and DOT according to the procedures of this subpart.

(a) Only one conforming transportation plan or TIP may exist in an area at any time; conformity determinations of a previous transportation plan or TIP expire once the current plan or TIP is found to conform by DOT. The conformity determination on a transportation plan or TIP will also lapse if conformity is not determined according to the frequency requirements of §93.104.

(b) This criterion is not required to be satisfied at the time of project approval for a TCM specifically included in the applicable implementation plan, provided that all other relevant criteria of this subpart are satisfied.

[60 FR 57185, Nov. 14, 1995]

§93.115 Criteria and procedures: Projects from a plan and TIP.

(a) The project must come from a conforming plan and program. This criterion applies during all periods. If this criterion is not satisfied, the project must satisfy all criteria in Table 1 for a project not from a conforming transportation plan and TIP. A project is considered to be from a conforming transportation plan if it meets the requirements of paragraph (b) of this section and from a conforming program if it meets the requirements of paragraph (c) of this section. Special provisions for TCMs in an applicable implementation plan are provided in paragraph (d) of this section.

(b) A project is considered to be from a conforming transportation plan if one of the following conditions applies:

(1) For projects which are required to be identified in the transportation plan in order to satisfy § 93.106, the project is specifically included in the conforming transportation plan and the project's design concept and scope have not changed significantly from those which were described in the transportation plan, or in a manner which would significantly impact use of the facility; or

(2) For projects which are not required to be specifically identified in the transportation plan, the project is identified in the conforming transportation plan, or is consistent with the policies and purpose of the transportation plan and will not interfere with other projects specifically included in the transportation plan.

(c) A project is considered to be from a conforming program if the following conditions are met:

(1) The project is included in the conforming TIP and the design concept and scope of the project were adequate at the time of the TIP conformity determination to determine its contribution to the TIP's regional emissions and have not changed significantly from those which were described in the TIP, or in a manner which would significantly impact use of the facility; and

(2) If the TIP describes a project design concept and scope which includes project-level emissions mitigation or control measures, written commitments to implement such measures must be obtained from the project sponsor and/or operator as required by § 93.133(a) in order for the project to be considered from a conforming program. Any change in these mitigation or control measures that would significantly reduce their effectiveness constitutes a change in the design concept and scope of the project.

(d) *TCMs.* This criterion is not required to be satisfied for TCMs specifically included in an applicable implementation plan.

[58 FR 62235, Nov. 24, 1993, as amended at 60 FR 57185, Nov. 14, 1995]

§ 93.116 Criteria and procedures: Localized CO and PM_{10} violations (hot spots).

(a) The FHWA/FTA project must not cause or contribute to any new localized CO or PM_{10} violations or increase the frequency or severity of any existing CO or PM_{10} violations in CO and PM_{10} nonattainment and maintenance areas. This criterion applies during all periods. This criterion is satisfied if it is demonstrated that no new local violations will be created and the severity or number of existing violations will not be increased as a result of the project.

(b) The demonstration must be performed according to the requirements of §§ 93.105(c)(1)(i) and 93.131.

(c) For projects which are not of the type identified by § 93.131(a) or § 93.131(d), this criterion may be satisfied if consideration of local factors clearly demonstrates that no local violations presently exist and no new local violations will be created as a result of the project. Otherwise, in CO nonattainment and maintenance areas, a quantitative demonstration must be performed according to the requirements of § 93.131(b).

§ 93.117 Criteria and procedures: Compliance with PM_{10} control measures.

The FHWA/FTA project must comply with PM_{10} control measures in the applicable implementation plan. This criterion applies during all periods. It is satisfied if control measures (for the purpose of limiting PM_{10} emissions from the construction activities and/or normal use and operation associated with the project) contained in the applicable implementation plan are included in the final plans, specifications, and estimates for the project.

§ 93.118 Criteria and procedures: Motor vehicle emissions budget (transportation plan).

(a) The transportation plan must be consistent with the motor vehicle emissions budget(s) in the applicable implementation plan (or implementation plan submission). This criterion applies during the transitional period

and the control strategy and maintenance periods, except as provided in § 93.136. This criterion may be satisfied if the requirements in paragraphs (b) and (c) of this section are met:

(b) A regional emissions analysis shall be performed as follows:

(1) The regional analysis shall estimate emissions of any of the following pollutants and pollutant precursors for which the area is in nonattainment or maintenance and for which the applicable implementation plan (or implementation plan submission) establishes an emissions budget:

(i) VOC as an ozone precursor;

(ii) NO_x as an ozone precursor;

(iii) CO;

(iv) PM_{10} (and its precursors VOC and/or NO_x if the applicable implementation plan or implementation plan submission identifies transportation-related precursor emissions within the nonattainment area as a significant contributor to the PM_{10} nonattainment problem or establishes a budget for such emissions); or

(v) NO_x (in NO_2 nonattainment or maintenance areas);

(2) The regional emissions analysis shall estimate emissions from the entire transportation system, including all regionally significant projects contained in the transportation plan and all other regionally significant highway and transit projects expected in the nonattainment or maintenance area in the timeframe of the transportation plan;

(3) The emissions analysis methodology shall meet the requirements of § 93.130;

(4) For areas with a transportation plan that meets the content requirements of § 93.106(a), the emissions analysis shall be performed for each horizon year. Emissions in milestone years which are between the horizon years may be determined by interpolation; and

(5) For areas with a transportation plan that does not meet the content requirements of § 93.106(a), the emissions analysis shall be performed for any years in the time span of the transportation plan provided they are not more than ten years apart and provided the analysis is performed for the last year of the plan's forecast period. If the attainment year is in the time span of the transportation plan, the emissions analysis must also be performed for the attainment year. Emissions in milestone years which are between these analysis years may be determined by interpolation.

(c) The regional emissions analysis shall demonstrate that for each of the applicable pollutants or pollutant precursors in paragraph (b)(1) of this section the emissions are less than or equal to the motor vehicle emissions budget as established in the applicable implementation plan or implementation plan submission as follows:

(1) If the applicable implementation plan or implementation plan submission establishes emissions budgets for milestone years, emissions in each milestone year are less than or equal to the motor vehicle emissions budget established for that year;

(2) For nonattainment areas, emissions in the attainment year are less than or equal to the motor vehicle emissions budget established in the applicable implementation plan or implementation plan submission for that year;

(3) For nonattainment areas, emissions in each analysis or horizon year after the attainment year are less than or equal to the motor vehicle emissions budget established by the applicable implementation plan or implementation plan submission for the attainment year. If emissions budgets are established for years after the attainment year, emissions in each analysis year or horizon year must be less than or equal to the motor vehicle emissions budget for that year, if any, or the motor vehicle emissions budget for the most recent budget year prior to the analysis year or horizon year; and

(4) For maintenance areas, emissions in each analysis or horizon year are less than or equal to the motor vehicle emissions budget established by the maintenance plan for that year, if any, or the emissions budget for the most recent budget year prior to the analysis or horizon year.

[58 FR 62235, Nov. 24, 1993, as amended at 60 FR 57185, Nov. 14, 1995]

§ 93.119 Criteria and procedures: Motor vehicle emissions budget (TIP).

(a) The TIP must be consistent with the motor vehicle emissions budget(s) in the applicable implementation plan (or implementation plan submission). This criterion applies during the transitional period and the control strategy and maintenance periods, except as provided in § 93.136. This criterion may be satisfied if the requirements in paragraphs (b) and (c) of this section are met.

(b) For areas with a conforming transportation plan that fully meets the content requirements of § 93.106(a), this criterion may be satisfied without additional regional analysis if:

(1) Each program year of the TIP is consistent with the Federal funding which may be reasonably expected for that year, and required State/local matching funds and funds for State/local funding-only projects are consistent with the revenue sources expected over the same period; and

(2) The TIP is consistent with the conforming transportation plan such that the regional emissions analysis already performed for the plan applies to the TIP also. This requires a demonstration that:

(i) The TIP contains all projects which must be started in the TIP's timeframe in order to achieve the highway and transit system envisioned by the transportation plan in each of its horizon years;

(ii) All TIP projects which are regionally significant are part of the specific highway or transit system envisioned in the transportation plan's horizon years; and

(iii) The design concept and scope of each regionally significant project in the TIP is not significantly different from that described in the transportation plan.

(3) If the requirements in paragraphs (b)(1) and (b)(2) of this section are not met, then:

(i) The TIP may be modified to meet those requirements; or

(ii) The transportation plan must be revised so that the requirements in paragraphs (b)(1) and (b)(2) of this section are met. Once the revised plan has been found to conform, this criterion is met for the TIP with no additional analysis except a demonstration that the TIP meets the requirements of paragraphs (b)(1) and (b)(2) of this section.

(c) For areas with a transportation plan that does not meet the content requirements of § 93.106(a), a regional emissions analysis must meet all of the following requirements:

(1) The regional emissions analysis shall estimate emissions from the entire transportation system, including all projects contained in the proposed TIP, the transportation plan, and all other regionally significant highway and transit projects expected in the nonattainment or maintenance area in the timeframe of the transportation plan;

(2) The analysis methodology shall meet the requirements of § 93.130(c); and

(3) The regional analysis shall satisfy the requirements of §§ 93.118(b)(1), 93.118(b)(5), and 93.118(c).

§ 93.120 Criteria and procedures: Motor vehicle emissions budget (project not from a plan and TIP).

(a) The project which is not from a conforming transportation plan and a conforming TIP must be consistent with the motor vehicle emissions budget(s) in the applicable implementation plan (or implementation plan submission). This criterion applies during the transitional period and the control strategy and maintenance periods, except as provided in § 93.136. It is satisfied if emissions from the implementation of the project, when considered with the emissions from the projects in the conforming transportation plan and TIP and all other regionally significant projects expected in the area, do not exceed the motor vehicle emissions budget(s) in the applicable implementation plan (or implementation plan submission).

(b) For areas with a conforming transportation plan that meets the content requirements of § 93.106(a):

(1) This criterion may be satisfied without additional regional analysis if the project is included in the conforming transportation plan, even if it is not specifically included in the latest

conforming TIP. This requires a demonstration that:

(i) Allocating funds to the project will not delay the implementation of projects in the transportation plan or TIP which are necessary to achieve the highway and transit system envisioned by the transportation plan in each of its horizon years;

(ii) The project is not regionally significant or is part of the specific highway or transit system envisioned in the transportation plan's horizon years; and

(iii) The design concept and scope of the project is not significantly different from that described in the transportation plan.

(2) If the requirements in paragraph (b)(1) of this section are not met, a regional emissions analysis must be performed as follows:

(i) The analysis methodology shall meet the requirements of §93.130;

(ii) The analysis shall estimate emissions from the transportation system, including the proposed project and all other regionally significant projects expected in the nonattainment or maintenance area in the timeframe of the transportation plan. The analysis must include emissions from all previously approved projects which were not from a transportation plan and TIP; and

(iii) The emissions analysis shall meet the requirements of §§93.118(b)(1), 93.118(b)(4), and 93.118(c).

(c) For areas with a transportation plan that does not meet the content requirements of §93.106(a), a regional emissions analysis must be performed for the project together with the conforming TIP and all other regionally significant projects expected in the nonattainment or maintenance area. This criterion may be satisfied if:

(1) The analysis methodology meets the requirements of §93.130(c);

(2) The analysis estimates emissions from the transportation system, including the proposed project, and all other regionally significant projects expected in the nonattainment or maintenance area in the timeframe of the transportation plan; and

(3) The regional analysis satisfies the requirements of §§93.118(b)(1), 93.118(b)(5), and 93.118(c).

§93.121 Criteria and procedures: Localized CO violations (hot spots) in the interim period.

(a) Each FHWA/FTA project must eliminate or reduce the severity and number of localized CO violations in the area substantially affected by the project (in CO nonattainment areas). This criterion applies during the interim and transitional periods only. This criterion is satisfied with respect to existing localized CO violations if it is demonstrated that existing localized CO violations will be eliminated or reduced in severity and number as a result of the project.

(b) The demonstration must be performed according to the requirements of §§93.105(c)(1)(i) and 93.131.

(c) For projects which are not of the type identified by §93.131(a), this criterion may be satisfied if consideration of local factors clearly demonstrates that existing CO violations will be eliminated or reduced in severity and number. Otherwise, a quantitative demonstration must be performed according to the requirements of §93.131(b).

§93.122 Criteria and procedures: Interim period reductions in ozone and CO areas (transportation plan).

(a) A transportation plan must contribute to emissions reductions in ozone and CO nonattainment areas. This criterion applies during the interim and transitional periods only, except as otherwise provided in §93.136. It applies to the net effect on emissions of all projects contained in a new or revised transportation plan. This criterion may be satisfied if a regional emissions analysis is performed as described in paragraphs (b) through (f) of this section.

(b) Determine the analysis years for which emissions are to be estimated. Analysis years shall be no more than ten years apart. The first analysis year shall be no later than the first milestone year (1995 in CO nonattainment areas and 1996 in ozone nonattainment areas). The second analysis year shall be either the attainment year for the area, or if the attainment year is the same as the first analysis year or earlier, the second analysis year shall be at least five years beyond the first

analysis year. The last year of the transportation plan's forecast period shall also be an analysis year.

(c) Define the 'Baseline' scenario for each of the analysis years to be the future transportation system that would result from current programs, composed of the following (except that projects listed in §§ 93.134 and 93.135 need not be explicitly considered):

(1) All in-place regionally significant highway and transit facilities, services and activities;

(2) All ongoing travel demand management or transportation system management activities; and

(3) Completion of all regionally significant projects, regardless of funding source, which are currently under construction or are undergoing right-of-way acquisition (except for hardship acquisition and protective buying); come from the first three years of the previously conforming transportation plan and/or TIP; or have completed the NEPA process. (For the first conformity determination on the transportation plan after November 24, 1993, a project may not be included in the ''Baseline'' scenario if one of the following major steps has not occurred within the past three years: NEPA process completion; start of final design; acquisition of a significant portion of the right-of-way; or approval of the plans, specifications and estimates. Such a project must be included in the ''Action'' scenario, as described in paragraph (d) of this section.)

(d) Define the 'Action' scenario for each of the analysis years as the transportation system that will result in that year from the implementation of the proposed transportation plan, TIPs adopted under it, and other expected regionally significant projects in the nonattainment area. It will include the following (except that projects listed in §§ 93.134 and 93.135 need not be explicitly considered):

(1) All facilities, services, and activities in the 'Baseline' scenario;

(2) Completion of all TCMs and regionally significant projects (including facilities, services, and activities) specifically identified in the proposed transportation plan which will be operational or in effect in the analysis year, except that regulatory TCMs may not be assumed to begin at a future time unless the regulation is already adopted by the enforcing jurisdiction or the TCM is identified in the applicable implementation plan;

(3) All travel demand management programs and transportation system management activities known to the MPO, but not included in the applicable implementation plan or utilizing any Federal funding or approval, which have been fully adopted and/or funded by the enforcing jurisdiction or sponsoring agency since the last conformity determination on the transportation plan;

(4) The incremental effects of any travel demand management programs and transportation system management activities known to the MPO, but not included in the applicable implementation plan or utilizing any Federal funding or approval, which were adopted and/or funded prior to the date of the last conformity determination on the transportation plan, but which have been modified since then to be more stringent or effective;

(5) Completion of all expected regionally significant highway and transit projects which are not from a conforming transportation plan and TIP; and

(6) Completion of all expected regionally significant non-FHWA/FTA highway and transit projects that have clear funding sources and commitments leading toward their implementation and completion by the analysis year.

(e) Estimate the emissions predicted to result in each analysis year from travel on the transportation systems defined by the 'Baseline' and 'Action' scenarios and determine the difference in regional VOC and NO_x emissions (unless the Administrator determines that additional reductions in NO_x would not contribute to attainment) between the two scenarios for ozone nonattainment areas and the difference in CO emissions between the two scenarios for CO nonattainment areas. The analysis must be performed for each of the analysis years according to the requirements of § 93.130. Emissions in milestone years which are between the analysis years may be determined by interpolation.

(f) This criterion is met if the regional VOC and NO_x emissions (for ozone nonattainment areas) and CO emissions (for CO nonattainment areas) predicted in the 'Action' scenario are less than the emissions predicted from the 'Baseline' scenario in each analysis year, and if this can reasonably be expected to be true in the periods between the first milestone year and the analysis years. The regional analysis must show that the 'Action' scenario contributes to a reduction in emissions from the 1990 emissions by any nonzero amount.

§93.123 Criteria and procedures: Interim period reductions in ozone and CO areas (TIP).

(a) A TIP must contribute to emissions reductions in ozone and CO nonattainment areas. This criterion applies during the interim and transitional periods only, except as otherwise provided in §93.136. It applies to the net effect on emissions of all projects contained in a new or revised TIP. This criterion may be satisfied if a regional emissions analysis is performed as described in paragraphs (b) through (f) of this section.

(b) Determine the analysis years for which emissions are to be estimated. The first analysis year shall be no later than the first milestone year (1995 in CO nonattainment areas and 1996 in ozone nonattainment areas). The analysis years shall be no more than ten years apart. The second analysis year shall be either the attainment year for the area, or if the attainment year is the same as the first analysis year or earlier, the second analysis year shall be at least five years beyond the first analysis year. The last year of the transportation plan's forecast period shall also be an analysis year.

(c) Define the 'Baseline' scenario as the future transportation system that would result from current programs, composed of the following (except that projects listed in §§93.134 and 93.135 need not be explicitly considered):

(1) All in-place regionally significant highway and transit facilities, services and activities;

(2) All ongoing travel demand management or transportation system management activities; and

(3) Completion of all regionally significant projects, regardless of funding source, which are currently under construction or are undergoing right-of-way acquisition (except for hardship acquisition and protective buying); come from the first three years of the previously conforming TIP; or have completed the NEPA process. (For the first conformity determination on the TIP after November 24, 1993, a project may not be included in the ''Baseline'' scenario if one of the following major steps has not occurred within the past three years: NEPA process completion; start of final design; acquisition of a significant portion of the right-of-way; or approval of the plans, specifications and estimates. Such a project must be included in the ''Action'' scenario, as described in paragraph (d) of this section.)

(d) Define the 'Action' scenario as the future transportation system that will result from the implementation of the proposed TIP and other expected regionally significant projects in the nonattainment area in the timeframe of the transportation plan. It will include the following (except that projects listed in §§93.134 and 93.135 need not be explicitly considered):

(1) All facilities, services, and activities in the 'Baseline' scenario;

(2) Completion of all TCMs and regionally significant projects (including facilities, services, and activities) included in the proposed TIP, except that regulatory TCMs may not be assumed to begin at a future time unless the regulation is already adopted by the enforcing jurisdiction or the TCM is contained in the applicable implementation plan;

(3) All travel demand management programs and transportation system management activities known to the MPO, but not included in the applicable implementation plan or utilizing any Federal funding or approval, which have been fully adopted and/or funded by the enforcing jurisdiction or sponsoring agency since the last conformity determination on the TIP;

(4) The incremental effects of any travel demand management programs and transportation system management activities known to the MPO, but

not included in the applicable implementation plan or utilizing any Federal funding or approval, which were adopted and/or funded prior to the date of the last conformity determination on the TIP, but which have been modified since then to be more stringent or effective;

(5) Completion of all expected regionally significant highway and transit projects which are not from a conforming transportation plan and TIP; and

(6) Completion of all expected regionally significant non-FHWA/FTA highway and transit projects that have clear funding sources and commitments leading toward their implementation and completion by the analysis year.

(e) Estimate the emissions predicted to result in each analysis year from travel on the transportation systems defined by the 'Baseline' and 'Action' scenarios, and determine the difference in regional VOC and NO_x emissions (unless the Administrator determines that additional reductions of NO_x would not contribute to attainment) between the two scenarios for ozone nonattainment areas and the difference in CO emissions between the two scenarios for CO nonattainment areas. The analysis must be performed for each of the analysis years according to the requirements of § 93.130. Emissions in milestone years which are between analysis years may be determined by interpolation.

(f) This criterion is met if the regional VOC and NO_x emissions in ozone nonattainment areas and CO emissions in CO nonattainment areas predicted in the 'Action' scenario are less than the emissions predicted from the 'Baseline' scenario in each analysis year, and if this can reasonably be expected to be true in the period between the analysis years. The regional analysis must show that the 'Action' scenario contributes to a reduction in emissions from the 1990 emissions by any nonzero amount.

§ 93.124 Criteria and procedures: Interim period reductions for ozone and CO areas (project not from a plan and TIP).

A transportation project which is not from a conforming transportation plan and TIP must contribute to emissions reductions in ozone and CO nonattainment areas. This criterion applies during the interim and transitional periods only, except as otherwise provided in § 93.136. This criterion is satisfied if a regional emissions analysis is performed which meets the requirements of § 93.122 and which includes the transportation plan and project in the 'Action' scenario. If the project which is not from a conforming transportation plan and TIP is a modification of a project currently in the plan or TIP, the 'Baseline' scenario must include the project with its original design concept and scope, and the 'Action' scenario must include the project with its new design concept and scope.

§ 93.125 Criteria and procedures: Interim period reductions for PM_{10} and NO_2 areas (transportation plan).

(a) A transportation plan must contribute to emission reductions or must not increase emissions in PM_{10} and NO_2 nonattainment areas. This criterion applies only during the interim and transitional periods. It applies to the net effect on emissions of all projects contained in a new or revised transportation plan. This criterion may be satisfied if the requirements of either paragraph (b) or (c) of this section are met.

(b) Demonstrate that implementation of the plan and all other regionally significant projects expected in the nonattainment area will contribute to reductions in emissions of PM_{10} in a PM_{10} nonattainment area (and of each transportation-related precursor of PM_{10} in PM_{10} nonattainment areas if the EPA Regional Administrator or the director of the State air agency has made a finding that such precursor emissions from within the nonattainment area are a significant contributor to the PM_{10} nonattainment problem and has so notified the MPO and DOT) and of NO_x in an NO_2 nonattainment area, by performing a regional emissions analysis as follows:

(1) Determine the analysis years for which emissions are to be estimated. Analysis years shall be no more than ten years apart. The first analysis year shall be no later than 1996 (for NO_2

areas) or four years and six months following the date of designation (for PM_{10} areas). The second analysis year shall be either the attainment year for the area, or if the attainment year is the same as the first analysis year or earlier, the second analysis year shall be at least five years beyond the first analysis year. The last year of the transportation plan's forecast period shall also be an analysis year.

(2) Define for each of the analysis years the ''Baseline'' scenario, as defined in § 93.122(c), and the ''Action'' scenario, as defined in § 93.122(d).

(3) Estimate the emissions predicted to result in each analysis year from travel on the transportation systems defined by the ''Baseline'' and ''Action'' scenarios and determine the difference between the two scenarios in regional PM_{10} emissions in a PM_{10} nonattainment area (and transportation-related precursors of PM_{10} in PM_{10} nonattainment areas if the EPA Regional Administrator or the director of the State air agency has made a finding that such precursor emissions from within the nonattainment area are a significant contributor to the PM_{10} nonattainment problem and has so notified the MPO and DOT) and in NO_x emissions in an NO_2 nonattainment area. The analysis must be performed for each of the analysis years according to the requirements of § 93.130. The analysis must address the periods between the analysis years and the periods between 1990, the first milestone year (if any), and the first of the analysis years. Emissions in milestone years which are between the analysis years may be determined by interpolation.

(4) Demonstrate that the regional PM_{10} emissions and PM_{10} precursor emissions, where applicable, (for PM_{10} nonattainment areas) and NO_x emissions (for NO_2 nonattainment areas) predicted in the 'Action' scenario are less than the emissions predicted from the 'Baseline' scenario in each analysis year, and that this can reasonably be expected to be true in the periods between the first milestone year (if any) and the analysis years.

(c) Demonstrate that when the projects in the transportation plan and all other regionally significant projects expected in the nonattainment area are implemented, the transportation system's total highway and transit emissions of PM_{10} in a PM_{10} nonattainment area (and transportation-related precursors of PM_{10} in PM_{10} nonattainment areas if the EPA Regional Administrator or the director of the State air agency has made a finding that such precursor emissions from within the nonattainment area are a significant contributor to the PM_{10} nonattainment problem and has so notified the MPO and DOT) and of NO_x in an NO_2 nonattainment area will not be greater than baseline levels, by performing a regional emissions analysis as follows:

(1) Determine the baseline regional emissions of PM_{10} and PM_{10} precursors, where applicable (for PM_{10} nonattainment areas) and NO_x (for NO_2 nonattainment areas) from highway and transit sources. Baseline emissions are those estimated to have occurred during calendar year 1990, unless the implementation plan revision required by § 51.396 of this chapter defines the baseline emissions for a PM_{10} area to be those occurring in a different calendar year for which a baseline emissions inventory was developed for the purpose of developing a control strategy implementation plan.

(2) Estimate the emissions of the applicable pollutant(s) from the entire transportation system, including projects in the transportation plan and TIP and all other regionally significant projects in the nonattainment area, according to the requirements of § 93.130. Emissions shall be estimated for analysis years which are no more than ten years apart. The first analysis year shall be no later than 1996 (for NO_2 areas) or four years and six months following the date of designation (for PM_{10} areas). The second analysis year shall be either the attainment year for the area, or if the attainment year is the same as the first analysis year or earlier, the second analysis year shall be at least five years beyond the first analysis year. The last year of the transportation plan's forecast period shall also be an analysis year.

(3) Demonstrate that for each analysis year the emissions estimated in paragraph (c)(2) of this section are no greater than baseline emissions of PM_{10} and PM_{10} precursors, where applicable

(for PM_{10} nonattainment areas) or NO_x (for NO_2 nonattainment areas) from highway and transit sources.

§ 93.126 Criteria and procedures: Interim period reductions for PM_{10} and NO_2 areas (TIP).

(a) A TIP must contribute to emission reductions or must not increase emissions in PM_{10} and NO_2 nonattainment areas. This criterion applies only during the interim and transitional periods. It applies to the net effect on emissions of all projects contained in a new or revised TIP. This criterion may be satisfied if the requirements of either paragraph (b) or paragraph (c) of this section are met.

(b) Demonstrate that implementation of the plan and TIP and all other regionally significant projects expected in the nonattainment area will contribute to reductions in emissions of PM_{10} in a PM_{10} nonattainment area (and transportation-related precursors of PM_{10} in PM_{10} nonattainment areas if the EPA Regional Administrator or the director of the State air agency has made a finding that such precursor emissions from within the nonattainment area are a significant contributor to the PM_{10} nonattainment problem and has so notified the MPO and DOT) and of NO_x in an NO_2 nonattainment area, by performing a regional emissions analysis as follows:

(1) Determine the analysis years for which emissions are to be estimated, according to the requirements of § 93.125(b)(1).

(2) Define for each of the analysis years the ''Baseline'' scenario, as defined in § 93.123(c), and the ''Action'' scenario, as defined in § 93.123(d).

(3) Estimate the emissions predicted to result in each analysis year from travel on the transportation systems defined by the ''Baseline'' and ''Action'' scenarios as required by § 93.125(b)(3), and make the demonstration required by § 93.125(b)(4).

(c) Demonstrate that when the projects in the transportation plan and TIP and all other regionally significant projects expected in the area are implemented, the transportation system's total highway and transit emissions of PM_{10} in a PM_{10} nonattainment area (and transportation-related precursors of PM_{10} in PM_{10} nonattainment areas if the EPA Regional Administrator or the director of the State air agency has made a finding that such precursor emissions from within the nonattainment area are a significant contributor to the PM_{10} nonattainment problem and has so notified the MPO and DOT) and of NO_x in an NO_2 nonattainment area will not be greater than baseline levels, by performing a regional emissions analysis as required by § 93.125(c)(1) through (3).

§ 93.127 Criteria and procedures: Interim period reductions for PM_{10} and NO_2 areas (project not from a plan and TIP).

A transportation project which is not from a conforming transportation plan and TIP must contribute to emission reductions or must not increase emissions in PM_{10} and NO_2 nonattainment areas. This criterion applies during the interim and transitional periods only. This criterion is met if a regional emissions analysis is performed which meets the requirements of § 93.125 and which includes the transportation plan and project in the 'Action' scenario. If the project which is not from a conforming transportation plan and TIP is a modification of a project currently in the transportation plan or TIP, and § 93.125(b) is used to demonstrate satisfaction of this criterion, the 'Baseline' scenario must include the project with its original design concept and scope, and the 'Action' scenario must include the project with its new design concept and scope.

§ 93.128 Transition from the interim period to the control strategy period.

(a) *Control strategy implementation plan submissions.* (1) The transportation plan and TIP must be demonstrated to conform by 18 months from the date of the State's initial submission to EPA of each control strategy implementation plan establishing a motor vehicle emissions budget. If conformity is not determined by 18 months from the date of submission of such control strategy implementation plan, the conformity status of the transportation plan and TIP will lapse, and no new project-level conformity determinations may be made, until the transportation plan

and TIP have been demonstrated to conform.

(2) For areas not yet in the control strategy period for a given pollutant, conformity shall be demonstrated using the motor vehicle emissions budget(s) in a submitted control strategy implementation plan revision for that pollutant beginning 90 days after submission, unless EPA declares such budget(s) inadequate for transportation conformity purposes. The motor vehicle emissions budget(s) may be used to determine conformity during the first 90 days after its submission if EPA agrees that the budget(s) are adequate for conformity purposes.

(b) *Disapprovals.* (1) If EPA disapproves the submitted control strategy implementation plan revision and so notifies the State, MPO, and DOT, which initiates the sanction process under Clean Air Act section 179 or 110(m), the conformity status of the transportation plan and TIP shall lapse 120 days after EPA's disapproval, and no new project-level conformity determinations may be made. No new transportation plan, TIP, or project may be found to conform until another control strategy implementation plan revision fulfilling the same Clean Air Act requirements is submitted and conformity to this submission is determined.

(2) Notwithstanding paragraph (b)(1) of this section, if EPA disapproves the submitted control strategy implementation plan revision but makes a protective finding, the conformity status of the transportation plan and TIP shall lapse on the date that highway sanctions as a result of the disapproval are imposed on the nonattainment area under section 179(b)(1) of the Clean Air Act. No new transportation plan, TIP, or project may be found to conform until another control strategy implementation plan revision fulfilling the same Clean Air Act requirements is submitted and conformity to this submission is determined.

(c) *Failure to submit and incompleteness.* For areas where EPA notifies the State, MPO, and DOT of the State's failure to submit or submission of an incomplete control strategy implementation plan revision, which initiates the sanction process under Clean Air Act sections 179 or 110(m), the conformity status of the transportation plan and TIP shall lapse on the date that highway sanctions are imposed on the nonattainment area for such failure under section 179(b)(1) of the Clean Air Act, unless the failure has been remedied and acknowledged by a letter from the EPA Regional Administrator.

(d) *Federal implementation plans.* When EPA promulgates a federal implementation plan that contains motor vehicle emissions budget(s) as a result of a State failure, the conformity lapse imposed by this section because of that State failure is removed.

(e) *Projects.* If the currently conforming transportation plan and TIP have not been demonstrated to conform according to transitional period criteria and procedures, the requirements of paragraphs (e) (1) and (2) of this section must be met.

(1) Before a FHWA/FTA project which is regionally significant and increases single-occupant vehicle capacity (a new general purpose highway on a new location or adding general purpose lanes) may be found to conform, the State air agency must be consulted on how the emissions which the existing transportation plan and TIP's conformity determination estimates for the ''Action'' scenario (as required by §§ 93.122 through 93.127) compare to the motor vehicle emissions budget in the implementation plan submission or the projected motor vehicle emissions budget in the implementation plan under development.

(2) In the event of unresolved disputes on such project-level conformity determinations, the State air agency may escalate the issue to the Governor consistent with the procedure in § 93.105(d), which applies for any State air agency comments on a conformity determination.

(f) *Redetermination of conformity of the existing transportation plan and TIP according to the transitional period criteria and procedures.* (1) The redetermination of the conformity of the existing transportation plan and TIP according to transitional period criteria and procedures (as required by paragraphs (a)(1) and (d)(1) of this section) does not require new emissions analysis and does not have to satisfy the requirements of §§ 93.110 and 93.111 if:

(i) The control strategy implementation plan revision submitted to EPA uses the MPO's modeling of the existing transportation plan and TIP for its projections of motor vehicle emissions; and

(ii) The control strategy implementation plan does not include any transportation projects which are not included in the transportation plan and TIP.

(2) A redetermination of conformity as described in paragraph (f)(1) of this section is not considered a conformity determination for the purposes of § 93.104(b)(4) or § 93.104(c)(4) regarding the maximum intervals between conformity determinations. Conformity must be determined according to all the applicable criteria and procedures of § 93.109 within three years of the last determination which did not rely on paragraph (f)(1) of this section.

(g) *Nonattainment areas which are not required to demonstrate reasonable further progress and attainment.* If an area listed in § 93.136 submits a control strategy implementation plan revision, the requirements of paragraphs (a) and (e) of this section apply. Because the areas listed in § 93.136 are not required to demonstrate reasonable further progress and attainment the provisions of paragraphs (b) and (c) of this section do not apply to these areas.

(h) *Maintenance plans.* If a control strategy implementation plan revision is not submitted to EPA but a maintenance plan required by Clean Air Act section 175A is submitted to EPA, the requirements of paragraph (a) or (d) of this section apply, with the maintenance plan submission treated as a ''control strategy implementation plan revision'' for the purposes of those requirements.

[58 FR 62235, Nov. 24, 1993, as amended at 60 FR 7452, Feb. 8, 1995; 60 FR 40100, Aug. 7, 1995; 60 FR 57186, Nov. 14, 1995]

§ 93.129 Requirements for adoption or approval of projects by other recipients of funds designated under title 23 U.S.C. or the Federal Transit Act.

No recipient of federal funds designated under title 23 U.S.C. or the Federal Transit Act shall adopt or approve a regionally significant highway or transit project, regardless of funding source, unless there is a currently conforming transportation plan and TIP consistent with the requirements of § 93.114 and the requirements of one of the following paragraphs (a) through (e) of this section are met:

(a) The project comes from a conforming plan and program consistent with the requirements of § 93.115;

(b) The project is included in the regional emissions analysis supporting the currently conforming TIP's conformity determination, even if the project is not strictly ''included'' in the TIP for the purposes of MPO project selection or endorsement, and the project's design concept and scope have not changed significantly from those which were included in the regional emissions analysis, or in a manner which would significantly impact use of the facility;

(c) During the control strategy or maintenance period, the project is consistent with the motor vehicle emissions budget(s) in the applicable implementation plan consistent with the requirements of § 93.120;

(d) During Phase II of the interim period, the project contributes to emissions reductions or does not increase emissions consistent with the requirements of § 93.124 (in ozone and CO nonattainment areas) or § 93.127 (in PM_{10} and NO_2 nonattainment areas); or

(e) During the transitional period, the project satisfies the requirements of both paragraphs (c) and (d) of this section.

§ 93.130 Procedures for determining regional transportation-related emissions.

(a) *General requirements.* (1) The regional emissions analysis for the transportation plan, TIP, or project not from a conforming plan and TIP shall include all regionally significant projects expected in the nonattainment or maintenance area, including FHWA/FTA projects proposed in the transportation plan and TIP and all other regionally significant projects which are disclosed to the MPO as required by § 93.105. Projects which are not regionally significant are not required to be explicitly modeled, but VMT from such

projects must be estimated in accordance with reasonable professional practice. The effects of TCMs and similar projects that are not regionally significant may also be estimated in accordance with reasonable professional practice.

(2) The emissions analysis may not include for emissions reduction credit any TCMs which have been delayed beyond the scheduled date(s) until such time as implementation has been assured. If the TCM has been partially implemented and it can be demonstrated that it is providing quantifiable emission reduction benefits, the emissions analysis may include that emissions reduction credit.

(3) Emissions reduction credit from projects, programs, or activities which require a regulation in order to be implemented may not be included in the emissions analysis unless the regulation is already adopted by the enforcing jurisdiction. Adopted regulations are required for demand management strategies for reducing emissions which are not specifically identified in the applicable implementation plan, and for control programs which are external to the transportation system itself, such as tailpipe or evaporative emission standards, limits on gasoline volatility, inspection and maintenance programs, and oxygenated or reformulated gasoline or diesel fuel. A regulatory program may also be considered to be adopted if an opt-in to a Federally enforced program has been approved by EPA, if EPA has promulgated the program (if the control program is a Federal responsibility, such as tailpipe standards), or if the Clean Air Act requires the program without need for individual State action and without any discretionary authority for EPA to set its stringency, delay its effective date, or not implement the program.

(4) Notwithstanding paragraph (a)(3) of this section, during the transitional period, control measures or programs which are committed to in an implementation plan submission as described in §§ 93.118 through 93.120, but which has not received final EPA action in the form of a finding of incompleteness, approval, or disapproval may be assumed for emission reduction credit for the purpose of demonstrating that the requirements of §§ 93.118 through 93.120 are satisfied.

(5) A regional emissions analysis for the purpose of satisfying the requirements of §§ 93.122 through 93.124 may account for the programs in paragraph (a)(4) of this section, but the same assumptions about these programs shall be used for both the ''Baseline'' and ''Action'' scenarios.

(6) Ambient temperatures shall be consistent with those used to establish the emissions budget in the applicable implementation plan. Factors other than temperatures, for example the fraction of travel in a hot stabilized engine mode, may be modified after interagency consultation according to § 93.105 if the newer estimates incorporate additional or more geographically specific information or represent a logically estimated trend in such factors beyond the period considered in the applicable implementation plan.

(b) *Serious, severe, and extreme ozone nonattainment areas and serious carbon monoxide areas after January 1, 1995.* Estimates of regional transportation-related emissions used to support conformity determinations must be made according to procedures which meet the requirements in paragraphs (b) (1) through (5) of this section.

(1) A network-based transportation demand model or models relating travel demand and transportation system performance to land-use patterns, population demographics, employment, transportation infrastructure, and transportation policies must be used to estimate travel within the metropolitan planning area of the nonattainment area. Such a model shall possess the following attributes:

(i) The modeling methods and the functional relationships used in the model(s) shall in all respects be in accordance with acceptable professional practice, and reasonable for purposes of emission estimation;

(ii) The network-based model(s) must be validated against ground counts for a base year that is not more than 10 years prior to the date of the conformity determination. Land use, population, and other inputs must be based on the best available information and appropriate to the validation base year;

(iii) For peak-hour or peak-period traffic assignments, a capacity sensitive assignment methodology must be used;

(iv) Zone-to-zone travel times used to distribute trips between origin and destination pairs must be in reasonable agreement with the travel times which result from the process of assignment of trips to network links. Where use of transit currently is anticipated to be a significant factor in satisfying transportation demand, these times should also be used for modeling mode splits;

(v) Free-flow speeds on network links shall be based on empirical observations;

(vi) Peak and off-peak travel demand and travel times must be provided;

(vii) Trip distribution and mode choice must be sensitive to pricing, where pricing is a significant factor, if the network model is capable of such determinations and the necessary information is available;

(viii) The model(s) must utilize and document a logical correspondence between the assumed scenario of land development and use and the future transportation system for which emissions are being estimated. Reliance on a formal land-use model is not specifically required but is encouraged;

(ix) A dependence of trip generation on the accessibility of destinations via the transportation system (including pricing) is strongly encouraged but not specifically required, unless the network model is capable of such determinations and the necessary information is available;

(x) A dependence of regional economic and population growth on the accessibility of destinations via the transportation system is strongly encouraged but not specifically required, unless the network model is capable of such determinations and the necessary information is available; and

(xi) Consideration of emissions increases from construction-related congestion is not specifically required.

(2) Highway Performance Monitoring System (HPMS) estimates of vehicle miles traveled shall be considered the primary measure of vehicle miles traveled within the portion of the nonattainment or maintenance area and for the functional classes of roadways included in HPMS, for urban areas which are sampled on a separate urban area basis. A factor (or factors) shall be developed to reconcile and calibrate the network-based model estimates of vehicle miles traveled in the base year of its validation to the HPMS estimates for the same period, and these factors shall be applied to model estimates of future vehicle miles traveled. In this factoring process, consideration will be given to differences in the facility coverage of the HPMS and the modeled network description. Departure from these procedures is permitted with the concurrence of DOT and EPA.

(3) Reasonable methods shall be used to estimate nonattainment area vehicle travel on off-network roadways within the urban transportation planning area, and on roadways outside the urban transportation planning area.

(4) Reasonable methods in accordance with good practice must be used to estimate traffic speeds and delays in a manner that is sensitive to the estimated volume of travel on each roadway segment represented in the network model.

(c) *Areas which are not serious, severe, or extreme ozone nonattainment areas or serious carbon monoxide areas, or before January 1, 1995.* (1) Procedures which satisfy some or all of the requirements of paragraph (b) of this section shall be used in all areas not subject to paragraph (b) of this section in which those procedures have been the previous practice of the MPO.

(2) Regional emissions may be estimated by methods which do not explicitly or comprehensively account for the influence of land use and transportation infrastructure on vehicle miles traveled and traffic speeds and congestion. Such methods must account for VMT growth by extrapolating historical VMT or projecting future VMT by considering growth in population and historical growth trends for vehicle miles travelled per person. These methods must also consider future economic activity, transit alternatives, and transportation system policies.

(d) *Projects not from a conforming plan and TIP in isolated rural nonattainment and maintenance areas.* This paragraph applies to any nonattainment or maintenance area or any portion thereof

which does not have a metropolitan transportation plan or TIP and whose projects are not part of the emissions analysis of any MPO's metropolitan transportation plan or TIP (because the nonattainment or maintenance area or portion thereof does not contain a metropolitan planning area or portion of a metropolitan planning area and is not part of a Metropolitan Statistical Area or Consolidated Metropolitan Statistical Area which is or contains a nonattainment or maintenance area).

(1) Conformity demonstrations for projects in these areas may satisfy the requirements of §§93.120, 93.124, and 93.127 with one regional emissions analysis which includes all the regionally significant projects in the nonattainment or maintenance area (or portion thereof).

(2) The requirements of §93.120 shall be satisfied according to the procedures in §93.120(c), with references to the ''transportation plan'' taken to mean the statewide transportation plan.

(3) The requirements of §§93.124 and 93.127 which reference ''transportation plan'' or ''TIP'' shall be taken to mean those projects in the statewide transportation plan or statewide TIP which are in the nonattainment or maintenance area (or portion thereof).

(4) The requirement of §93.129(b) shall be satisfied if:

(i) The project is included in the regional emissions analysis which includes all regionally significant highway and transportation projects in the nonattainment or maintenance area (or portion thereof) and supports the most recent conformity determination made according to the requirements of §§93.120, 93.124, or 93.127 (as modified by paragraphs (d)(2) and (d)(3) of this section), as appropriate for the time period and pollutant; and

(ii) The project's design concept and scope have not changed significantly from those which were included in the regional emissions analysis, or in a manner which would significantly impact use of the facility.

(e) *PM_{10} from construction-related fugitive dust.* (1) For areas in which the implementation plan does not identify construction-related fugitive PM_{10} as a contributor to the nonattainment problem, the fugitive PM_{10} emissions associated with highway and transit project construction are not required to be considered in the regional emissions analysis.

(2) In PM_{10} nonattainment and maintenance areas with implementation plans which identify construction-related fugitive PM_{10} as a contributor to the nonattainment problem, the regional PM_{10} emissions analysis shall consider construction-related fugitive PM_{10} and shall account for the level of construction activity, the fugitive PM_{10} control measures in the applicable implementation plan, and the dust-producing capacity of the proposed activities.

[58 FR 62235, Nov. 24, 1993, as amended at 60 FR 57186, Nov. 14, 1995]

§93.131 Procedures for determining localized CO and PM_{10} concentrations (hot-spot analysis).

(a) In the following cases, CO hot-spot analyses must be based on the applicable air quality models, data bases, and other requirements specified in 40 CFR part 51, Appendix W (''Guideline on Air Quality Models (Revised)'' (1988), supplement A (1987) and supplement B (1993), EPA publication no. 450/2–78–027R), unless, after the interagency consultation process described in §93.105 and with the approval of the EPA Regional Administrator, these models, data bases, and other requirements are determined to be inappropriate:

(1) For projects in or affecting locations, areas, or categories of sites which are identified in the applicable implementation plan as sites of current violation or possible current violation;

(2) For those intersections at Level-of-Service D, E, or F, or those that will change to Level-of-Service D, E, or F because of increased traffic volumes related to a new project in the vicinity;

(3) For any project involving or affecting any of the intersections which the applicable implementation plan identifies as the top three intersections in the nonattainment or maintenance area based on the highest traffic volumes;

(4) For any project involving or affecting any of the intersections which the applicable implementation plan

identifies as the top three intersections in the nonattainment or maintenance area based on the worst Level-of-Service; and

(5) Where use of the ''Guideline'' models is practicable and reasonable given the potential for violations.

(b) In cases other than those described in paragraph (a) of this section, other quantitative methods may be used if they represent reasonable and common professional practice.

(c) CO hot-spot analyses must include the entire project, and may be performed only after the major design features which will significantly impact CO concentrations have been identified. The background concentration can be estimated using the ratio of future to current traffic multiplied by the ratio of future to current emission factors.

(d) PM_{10} hot-spot analysis must be performed for projects which are located at sites at which violations have been verified by monitoring, and at sites which have essentially identical vehicle and roadway emission and dispersion characteristics (including sites near one at which a violation has been monitored). The projects which require PM–10 hot-spot analysis shall be determined through the interagency consultation process required in § 93.105. In PM–10 nonattainment and maintenance areas, new or expanded bus and rail terminals and transfer points which increase the number of diesel vehicles congregating at a single location require hot-spot analysis. DOT may choose to make a categorical conformity determination on bus and rail terminals or transfer points based on appropriate modeling of various terminal sizes, configurations, and activity levels. The requirements of this paragraph for quantitative hot-spot analysis will not take effect until EPA releases modeling guidance on this subject and announces in the FEDERAL REGISTER that these requirements are in effect.

(e) Hot-spot analysis assumptions must be consistent with those in the regional emissions analysis for those inputs which are required for both analyses.

(f) PM_{10} or CO mitigation or control measures shall be assumed in the hot-spot analysis only where there are written commitments from the project sponsor and/or operator to the implementation of such measures, as required by § 93.133(a).

(g) CO and PM_{10} hot-spot analyses are not required to consider construction-related activities which cause temporary increases in emissions. Each site which is affected by construction-related activities shall be considered separately, using established ''Guideline'' methods. Temporary increases are defined as those which occur only during the construction phase and last five years or less at any individual site.

§ 93.132 Using the motor vehicle emissions budget in the applicable implementation plan (or implementation plan submission).

(a) In interpreting an applicable implementation plan (or implementation plan submission) with respect to its motor vehicle emissions budget(s), the MPO and DOT may not infer additions to the budget(s) that are not explicitly intended by the implementation plan (or submission). Unless the implementation plan explicitly quantifies the amount by which motor vehicle emissions could be higher while still allowing a demonstration of compliance with the milestone, attainment, or maintenance requirement and explicitly states an intent that some or all of this additional amount should be available to the MPO and DOT in the emission budget for conformity purposes, the MPO may not interpret the budget to be higher than the implementation plan's estimate of future emissions. This applies in particular to applicable implementation plans (or submissions) which demonstrate that after implementation of control measures in the implementation plan:

(1) Emissions from all sources will be less than the total emissions that would be consistent with a required demonstration of an emissions reduction milestone;

(2) Emissions from all sources will result in achieving attainment prior to the attainment deadline and/or ambient concentrations in the attainment deadline year will be lower than needed to demonstrate attainment; or

(3) Emissions will be lower than needed to provide for continued maintenance.

(b) If an applicable implementation plan submitted before November 24, 1993 demonstrates that emissions from all sources will be less than the total emissions that would be consistent with attainment and quantifies that ''safety margin,'' the State may submit a SIP revision which assigns some or all of this safety margin to highway and transit mobile sources for the purposes of conformity. Such a SIP revision, once it is endorsed by the Governor and has been subject to a public hearing, may be used for the purposes of transportation conformity before it is approved by EPA.

(c) A conformity demonstration shall not trade emissions among budgets which the applicable implementation plan (or implementation plan submission) allocates for different pollutants or precursors, or among budgets allocated to motor vehicles and other sources, without a SIP revision or a SIP which establishes mechanisms for such trades.

(d) If the applicable implementation plan (or implementation plan submission) estimates future emissions by geographic subarea of the nonattainment area, the MPO and DOT are not required to consider this to establish subarea budgets, unless the applicable implementation plan (or implementation plan submission) explicitly indicates an intent to create such subarea budgets for the purposes of conformity.

(e) If a nonattainment area includes more than one MPO, the SIP may establish motor vehicle emissions budgets for each MPO, or else the MPOs must collectively make a conformity determination for the entire nonattainment area.

§93.133 Enforceability of design concept and scope and project-level mitigation and control measures.

(a) Prior to determining that a transportation project is in conformity, the MPO, other recipient of funds designated under title 23 U.S.C. or the Federal Transit Act, FHWA, or FTA must obtain from the project sponsor and/or operator written commitments to implement in the construction of the project and operation of the resulting facility or service any project-level mitigation or control measures which are identified as conditions for NEPA process completion with respect to local PM_{10} or CO impacts. Before making conformity determinations written commitments must also be obtained for project-level mitigation or control measures which are conditions for making conformity determinations for a transportation plan or TIP and included in the project design concept and scope which is used in the regional emissions analysis required by §§93.118 through 93.120 and §§93.122–93.124 or used in the project-level hot-spot analysis required by §§93.116 and 93.121.

(b) Project sponsors voluntarily committing to mitigation measures to facilitate positive conformity determinations must comply with the obligations of such commitments.

(c) The implementation plan revision required in §51.396 of this chapter shall provide that written commitments to mitigation measures must be obtained prior to a positive conformity determination, and that project sponsors must comply with such commitments.

(d) During the control strategy and maintenance periods, if the MPO or project sponsor believes the mitigation or control measure is no longer necessary for conformity, the project sponsor or operator may be relieved of its obligation to implement the mitigation or control measure if it can demonstrate that the requirements of §§93.116, 93.118, and 93.119 are satisfied without the mitigation or control measure, and so notifies the agencies involved in the interagency consultation process required under §93.105. The MPO and DOT must confirm that the transportation plan and TIP still satisfy the requirements of §§93.118 and 93.119 and that the project still satisfies the requirements of §93.116, and therefore that the conformity determinations for the transportation plan, TIP, and project are still valid.

§93.134 Exempt projects.

Notwithstanding the other requirements of this subpart, highway and transit projects of the types listed in Table 2 are exempt from the requirement that a conformity determination

be made. Such projects may proceed toward implementation even in the absence of a conforming transportation plan and TIP. A particular action of the type listed in Table 2 is not exempt if the MPO in consultation with other agencies (see § 93.105(c)(1)(iii)), the EPA, and the FHWA (in the case of a highway project) or the FTA (in the case of a transit project) concur that it has potentially adverse emissions impacts for any reason. States and MPOs must ensure that exempt projects do not interfere with TCM implementation.

TABLE 2.—EXEMPT PROJECTS

Safety

Railroad/highway crossing.
Hazard elimination program.
Safer non-Federal-aid system roads.
Shoulder improvements.
Increasing sight distance.
Safety improvement program.
Traffic control devices and operating assistance other than signalization projects.
Railroad/highway crossing warning devices.
Guardrails, median barriers, crash cushions.
Pavement resurfacing and/or rehabilitation.
Pavement marking demonstration.
Emergency relief (23 U.S.C. 125).
Fencing.
Skid treatments.
Safety roadside rest areas.
Adding medians.
Truck climbing lanes outside the urbanized area.
Lighting improvements.
Widening narrow pavements or reconstructing bridges (no additional travel lanes).
Emergency truck pullovers.

Mass Transit

Operating assistance to transit agencies.
Purchase of support vehicles.
Rehabilitation of transit vehicles [1] .
Purchase of office, shop, and operating equipment for existing facilities.
Purchase of operating equipment for vehicles (e.g., radios, fareboxes, lifts, etc.).
Construction or renovation of power, signal, and communications systems.
Construction of small passenger shelters and information kiosks.
Reconstruction or renovation of transit buildings and structures (e.g., rail or bus buildings, storage and maintenance facilities, stations, terminals, and ancillary structures).
Rehabilitation or reconstruction of track structures, track, and trackbed in existing rights-of-way.
Purchase of new buses and rail cars to replace existing vehicles or for minor expansions of the fleet[1].
Construction of new bus or rail storage/maintenance facilities categorically excluded in 23 CFR part 771.

Air Quality

Continuation of ride-sharing and van-pooling promotion activities at current levels.
Bicycle and pedestrian facilities.

Other

Specific activities which do not involve or lead directly to construction, such as:
- Planning and technical studies.
- Grants for training and research programs.
- Planning activities conducted pursuant to titles 23 and 49 U.S.C.
- Federal-aid systems revisions.

TABLE 2.—EXEMPT PROJECTS—Continued

Engineering to assess social, economic, and environmental effects of the proposed action or alternatives to that action.
Noise attenuation.
Advance land acquisitions (23 CFR part 712 or 23 CFR part 771).
Acquisition of scenic easements.
Plantings, landscaping, etc.
Sign removal.
Directional and informational signs.
Transportation enhancement activities (except rehabilitation and operation of historic transportation buildings, structures, or facilities).
Repair of damage caused by natural disasters, civil unrest, or terrorist acts, except projects involving substantial functional, locational or capacity changes.

[1] In PM_{10} nonattainment or maintenance areas, such projects are exempt only if they are in compliance with control measures in the applicable implementation plan.

§93.135 Projects exempt from regional emissions analyses.

Notwithstanding the other requirements of this subpart, highway and transit projects of the types listed in Table 3 are exempt from regional emissions analysis requirements. The local effects of these projects with respect to CO or PM_{10} concentrations must be considered to determine if a hot-spot analysis is required prior to making a project-level conformity determination. These projects may then proceed to the project development process even in the absence of a conforming transportation plan and TIP. A particular action of the type listed in Table 3 is not exempt from regional emissions analysis if the MPO in consultation with other agencies (see §93.105(c)(1)(iii)), the EPA, and the FHWA (in the case of a highway project) or the FTA (in the case of a transit project) concur that it has potential regional impacts for any reason.

TABLE 3.—PROJECTS EXEMPT FROM REGIONAL EMISSIONS ANALYSES

D
Intersection channelization projects.
Intersection signalization projects at individual intersections.
Interchange reconfiguration projects.
Changes in vertical and horizontal alignment.
Truck size and weight inspection stations.
Bus terminals and transfer points.

§93.136 Special provisions for nonattainment areas which are not required to demonstrate reasonable further progress and attainment.

(a) *Application.* This section applies in the following areas:

(1) Rural transport ozone nonattainment areas;

(2) Marginal ozone areas;

(3) Submarginal ozone areas;

(4) Transitional ozone areas;

(5) Incomplete data ozone areas;

(6) Moderate CO areas with a design value of 12.7 ppm or less; and

(7) Not classified CO areas.

(b) *Default conformity procedures.* The criteria and procedures in §§93.122 through 93.124 will remain in effect throughout the control strategy period for transportation plans, TIPs, and projects (not from a conforming plan and TIP) in lieu of the procedures in §§93.118 through 93.120, except as otherwise provided in paragraph (c) of this section.

(c) *Optional conformity procedures.* The State or MPO may voluntarily develop an attainment demonstration and corresponding motor vehicle emissions budget like those required in areas with higher nonattainment classifications. In this case, the State must submit an implementation plan revision which contains that budget and attainment demonstration. Once EPA has approved this implementation plan revision, the procedures in §§93.118 through 93.120 apply in lieu of the procedures in §§93.122 through 93.124.

Subpart B—Determining Conformity of General Federal Actions to State or Federal Implementation Plans

SOURCE: 58 FR 63253, Nov. 30, 1993, unless otherwise noted.

§ 93.150 Prohibition.

(a) No department, agency or instrumentality of the Federal Government shall engage in, support in any way or provide financial assistance for, license or permit, or approve any activity which does not conform to an applicable implementation plan.

(b) A Federal agency must make a determination that a Federal action conforms to the applicable implementation plan in accordance with the requirements of this subpart before the action is taken.

(c) Paragraph (b) of this section does not include Federal actions where:

(1) A National Environmental Policy Act (NEPA) analysis was completed as evidenced by a final environmental assessment (EA), environmental impact statement (EIS), or finding of no significant impact (FONSI) that was prepared prior to January 31, 1994; or

(2)(i) Prior to January 31, 1994, an environmental analysis was commenced or a contract was awarded to develop the specific environmental analysis;

(ii) Sufficient environmental analysis is completed by March 15, 1994 so that the Federal agency may determine that the Federal action is in conformity with the specific requirements and the purposes of the applicable SIP pursuant to the agency's affirmative obligation under section 176(c) of the Clean Air Act (Act); and

(iii) A written determination of conformity under section 176(c) of the Act has been made by the Federal agency responsible for the Federal action by March 15, 1994.

(d) Notwithstanding any provision of this subpart, a determination that an action is in conformance with the applicable implementation plan does not exempt the action from any other requirements of the applicable implementation plan, the National Environmental Policy Act (NEPA), or the Clean Air Act (Act).

[58 FR 63253, Nov. 30, 1993; 58 FR 67442, Dec. 21, 1993]

§ 93.151 State implementation plan (SIP) revision.

The Federal conformity rules under this subpart, in addition to any existing applicable State requirements, establish the conformity criteria and procedures necessary to meet the Act requirements until such time as the required conformity SIP revision is approved by EPA. A State's conformity provisions must contain criteria and procedures that are no less stringent than the requirements described in this subpart. A State may establish more stringent conformity criteria and procedures only if they apply equally to nonfederal as well as Federal entities. Following EPA approval of the State conformity provisions (or a portion thereof) in a revision to the applicable SIP, the approved (or approved portion of the) State criteria and procedures would govern conformity determinations and the Federal conformity regulations contained in this part would apply only for the portion, if any, of the State's conformity provisions that is not approved by EPA. In addition, any previously applicable SIP requirements relating to conformity remain enforceable until the State revises its SIP to specifically remove them from the SIP and that revision is approved by EPA.

§ 93.152 Definitions.

Terms used but not defined in this part shall have the meaning given them by the Act and EPA's regulations (40 CFR chapter I), in that order of priority.

Affected Federal land manager means the Federal agency or the Federal official charged with direct responsibility for management of an area designated as Class I under the Act (42 U.S.C. 7472) that is located within 100 km of the proposed Federal action.

Applicable implementation plan or applicable SIP means the portion (or portions) of the SIP or most recent revision thereof, which has been approved under section 110 of the Act, or promulgated under section 110(c) of the Act

(Federal implementation plan), or promulgated or approved pursuant to regulations promulgated under section 301(d) of the Act and which implements the relevant requirements of the Act.

Areawide air quality modeling analysis means an assessment on a scale that includes the entire nonattainment or maintenance area which uses an air quality dispersion model to determine the effects of emissions on air quality.

Cause or contribute to a new violation means a Federal action that:

(1) Causes a new violation of a national ambient air quality standard (NAAQS) at a location in a nonattainment or maintenance area which would otherwise not be in violation of the standard during the future period in question if the Federal action were not taken; or

(2) Contributes, in conjunction with other reasonably foreseeable actions, to a new violation of a NAAQS at a location in a nonattainment or maintenance area in a manner that would increase the frequency or severity of the new violation.

Caused by, as used in the terms ''direct emissions'' and ''indirect emissions,'' means emissions that would not otherwise occur in the absence of the Federal action.

Criteria pollutant or standard means any pollutant for which there is established a NAAQS at 40 CFR part 50.

Direct emissions means those emissions of a criteria pollutant or its precursors that are caused or initiated by the Federal action and occur at the same time and place as the action.

Emergency means a situation where extremely quick action on the part of the Federal agencies involved is needed and where the timing of such Federal activities makes it impractical to meet the requirements of this subpart, such as natural disasters like hurricanes or earthquakes, civil disturbances such as terrorist acts and military mobilizations.

Emissions budgets are those portions of the applicable SIP's projected emission inventories that describe the levels of emissions (mobile, stationary, area, etc.) that provide for meeting reasonable further progress milestones, attainment, and/or maintenance for any criteria pollutant or its precursors.

Emissions offsets, for purposes of § 93.158, are emissions reductions which are quantifiable, consistent with the applicable SIP attainment and reasonable further progress demonstrations, surplus to reductions required by, and credited to, other applicable SIP provisions, enforceable at both the State and Federal levels, and permanent within the timeframe specified by the program.

Emissions that a Federal agency has a continuing program responsibility for means emissions that are specifically caused by an agency carrying out its authorities, and does not include emissions that occur due to subsequent activities, unless such activities are required by the Federal agency. When an agency, in performing its normal program responsibilities, takes actions itself or imposes conditions that result in air pollutant emissions by a non-Federal entity taking subsequent actions, such emissions are covered by the meaning of a continuing program responsibility.

EPA means the Environmental Protection Agency.

Federal action means any activity engaged in by a department, agency, or instrumentality of the Federal government, or any activity that a department, agency or instrumentality of the Federal government supports in any way, provides financial assistance for, licenses, permits, or approves, other than activities related to transportation plans, programs, and projects developed, funded, or approved under title 23 U.S.C. or the Federal Transit Act (49 U.S.C. 1601 *et seq.*). Where the Federal action is a permit, license, or other approval for some aspect of a non-Federal undertaking, the relevant activity is the part, portion, or phase of the non-Federal undertaking that requires the Federal permit, license, or approval.

Federal agency means, for purposes of this subpart, a Federal department, agency, or instrumentality of the Federal government.

Increase the frequency or severity of any existing violation of any standard in any area means to cause a nonattainment area to exceed a standard more

often or to cause a violation at a greater concentration than previously existed and/or would otherwise exist during the future period in question, if the project were not implemented.

Indirect emissions means those emissions of a criteria pollutant or its precursors that:

(1) Are caused by the Federal action, but may occur later in time and/or may be further removed in distance from the action itself but are still reasonably foreseeable; and

(2) The Federal agency can practicably control and will maintain control over due to a continuing program responsibility of the Federal agency.

Local air quality modeling analysis means an assessment of localized impacts on a scale smaller than the entire nonattainment or maintenance area, including, for example, congested roadway intersections and highways or transit terminals, which uses an air quality dispersion model to determine the effects of emissions on air quality.

Maintenance area means an area with a maintenance plan approved under section 175A of the Act.

Maintenance plan means a revision to the applicable SIP, meeting the requirements of section 175A of the Act.

Metropolitan Planning Organization (MPO) is that organization designated as being responsible, together with the State, for conducting the continuing, cooperative, and comprehensive planning process under 23 U.S.C. 134 and 49 U.S.C. 1607.

Milestone has the meaning given in sections 182(g)(1) and 189(c)(1) of the Act.

National ambient air quality standards (NAAQS) are those standards established pursuant to section 109 of the Act and include standards for carbon monoxide (CO), lead (Pb), nitrogen dioxide (NO_2), ozone, particulate matter (PM–10), and sulfur dioxide (SO_2).

NEPA is the National Environmental Policy Act of 1969, as amended (42 U.S.C. 4321 *et seq.*).

Nonattainment area means an area designated as nonattainment under section 107 of the Act and described in 40 CFR part 81.

Precursors of a criteria pollutant are:

(1) For ozone, nitrogen oxides (NOx), unless an area is exempted from NOx requirements under section 182(f) of the Act, and volatile organic compounds (VOC); and

(2) For PM–10, those pollutants described in the PM–10 nonattainment area applicable SIP as significant contributors to the PM–10 levels.

Reasonably foreseeable emissions are projected future indirect emissions that are identified at the time the conformity determination is made; the location of such emissions is known and the emissions are quantifiable, as described and documented by the Federal agency based on its own information and after reviewing any information presented to the Federal agency.

Regional water and/or wastewater projects include construction, operation, and maintenance of water or wastewater conveyances, water or wastewater treatment facilities, and water storage reservoirs which affect a large portion of a nonattainment or maintenance area.

Regionally significant action means a Federal action for which the direct and indirect emissions of any pollutant represent 10 percent or more of a nonattainment or maintenance area's emission inventory for that pollutant.

Total of direct and indirect emissions means the sum of direct and indirect emissions increases and decreases caused by the Federal action; i.e., the ''net'' emissions considering all direct and indirect emissions. The portion of emissions which are exempt or presumed to conform under § 93.153 (c), (d), (e), or (f) are not included in the ''total of direct and indirect emissions.'' The ''total of direct and indirect emissions'' includes emissions of criteria pollutants and emissions of precursors of criteria pollutants.

§ 93.153 Applicability.

(a) Conformity determinations for Federal actions related to transportation plans, programs, and projects developed, funded, or approved under title 23 U.S.C. or the Federal Transit Act (49 U.S.C. 1601 *et seq.*) must meet the procedures and criteria of 40 CFR part 51, subpart T, in lieu of the procedures set forth in this subpart.

(b) For Federal actions not covered by paragraph (a) of this section, a conformity determination is required for

each pollutant where the total of direct and indirect emissions in a nonattainment or maintenance area caused by a Federal action would equal or exceed any of the rates in paragraphs (b)(1) or (2) of this section.

(1) For purposes of paragraph (b) of this section, the following rates apply in nonattainment areas (NAA's):

	Tons/ year
Ozone (VOC's or NO_X):	
Serious NAA's	50
Severe NAA's	25
Extreme NAA's	10
Other ozone NAA's outside an ozone transport region	100
Marginal and moderate NAA's inside an ozone transport region:.	
VOC	50
NO_X	100
Carbon monoxide:	
All NAA's	100
SO_2 or NO_2:	
All NAA's	100
PM–10:	
Moderate NAA's	100
Serious NAA's	70
Pb:	
All NAA's	25

(2) For purposes of paragraph (b) of this section, the following rates apply in maintenance areas:

	Tons/ year
Ozone (NO_X), SO_2 or NO_2:	
All Maintenance Areas	100
Ozone (VOC's):	
Maintenance areas inside an ozone transport region	50
Maintenance areas outside an ozone transport region	100
Carbon monoxide:	
All Maintenance Areas	100
PM–10:	
All Maintenance Areas	100
Pb:	
All Maintenance Areas	25

(c) The requirements of this subpart shall not apply to the following Federal actions:

(1) Actions where the total of direct and indirect emissions are below the emissions levels specified in paragraph (b) of this section.

(2) Actions which would result in no emissions increase or an increase in emissions that is clearly de minimis:

(i) Judicial and legislative proceedings.

(ii) Continuing and recurring activities such as permit renewals where activities conducted will be similar in scope and operation to activities currently being conducted.

(iii) Rulemaking and policy development and issuance.

(iv) Routine maintenance and repair activities, including repair and maintenance of administrative sites, roads, trails, and facilities.

(v) Civil and criminal enforcement activities, such as investigations, audits, inspections, examinations, prosecutions, and the training of law enforcement personnel.

(vi) Administrative actions such as personnel actions, organizational changes, debt management or collection, cash management, internal agency audits, program budget proposals, and matters relating to the administration and collection of taxes, duties and fees.

(vii) The routine, recurring transportation of materiel and personnel.

(viii) Routine movement of mobile assets, such as ships and aircraft, in home port reassignments and stations (when no new support facilities or personnel are required) to perform as operational groups and/or for repair or overhaul.

(ix) Maintenance dredging and debris disposal where no new depths are required, applicable permits are secured, and disposal will be at an approved disposal site.

(x) Actions, such as the following, with respect to existing structures, properties, facilities and lands where future activities conducted will be similar in scope and operation to activities currently being conducted at the existing structures, properties, facilities, and lands; for example, relocation of personnel, disposition of federally-owned existing structures, properties, facilities, and lands, rent subsidies, operation and maintenance cost subsidies, the exercise of receivership or conservatorship authority, assistance in purchasing structures, and the production of coins and currency.

(xi) The granting of leases, licenses such as for exports and trade, permits, and easements where activities conducted will be similar in scope and operation to activities currently being conducted.

(xii) Planning, studies, and provision of technical assistance.

(xiii) Routine operation of facilities, mobile assets and equipment.

(xiv) Transfers of ownership, interests, and titles in land, facilities, and real and personal properties, regardless of the form or method of the transfer.

(xv) The designation of empowerment zones, enterprise communities, or viticultural areas.

(xvi) Actions by any of the Federal banking agencies or the Federal Reserve Banks, including actions regarding charters, applications, notices, licenses, the supervision or examination of depository institutions or depository institution holding companies, access to the discount window, or the provision of financial services to banking organizations or to any department, agency or instrumentality of the United States.

(xvii) Actions by the Board of Governors of the Federal Reserve System or any Federal Reserve Bank necessary to effect monetary or exchange rate policy.

(xviii) Actions that implement a foreign affairs function of the United States.

(xix) Actions (or portions thereof) associated with transfers of land, facilities, title, and real properties through an enforceable contract or lease agreement where the delivery of the deed is required to occur promptly after a specific, reasonable condition is met, such as promptly after the land is certified as meeting the requirements of CERCLA, and where the Federal agency does not retain continuing authority to control emissions associated with the lands, facilities, title, or real properties.

(xx) Transfers of real property, including land, facilities, and related personal property from a Federal entity to another Federal entity and assignments of real property, including land, facilities, and related personal property from a Federal entity to another Federal entity for subsequent deeding to eligible applicants.

(xxi) Actions by the Department of the Treasury to effect fiscal policy and to exercise the borrowing authority of the United States.

(3) Actions where the emissions are not reasonably foreseeable, such as the following:

(i) Initial Outer Continental Shelf lease sales which are made on a broad scale and are followed by exploration and development plans on a project level.

(ii) Electric power marketing activities that involve the acquisition, sale and transmission of electric energy.

(4) Actions which implement a decision to conduct or carry out a conforming program such as prescribed burning actions which are consistent with a conforming land management plan.

(d) Notwithstanding the other requirements of this subpart, a conformity determination is not required for the following Federal actions (or portion thereof):

(1) The portion of an action that includes major new or modified stationary sources that require a permit under the new source review (NSR) program (section 173 of the Act) or the prevention of significant deterioration program (title I, part C of the Act).

(2) Actions in response to emergencies or natural disasters such as hurricanes, earthquakes, etc., which are commenced on the order of hours or days after the emergency or disaster and, if applicable, which meet the requirements of paragraph (e) of this section.

(3) Research, investigations, studies, demonstrations, or training (other than those exempted under paragraph (c)(2) of this section), where no environmental detriment is incurred and/or, the particular action furthers air quality research, as determined by the State agency primarily responsible for the applicable SIP;

(4) Alteration and additions of existing structures as specifically required by new or existing applicable environmental legislation or environmental regulations (e.g., hush houses for aircraft engines and scrubbers for air emissions).

(5) Direct emissions from remedial and removal actions carried out under the Comprehensive Environmental Response, Compensation and Liability Act and associated regulations to the extent such emissions either comply with the substantive requirements of

the PSD/NSR permitting program or are exempted from other environmental regulation under the provisions of CERCLA and applicable regulations issued under CERCLA.

(e) Federal actions which are part of a continuing response to an emergency or disaster under paragraph (d)(2) of this section and which are to be taken more than 6 months after the commencement of the response to the emergency or disaster under paragraph (d)(2) of this section are exempt from the requirements of this subpart only if:

(1) The Federal agency taking the actions makes a written determination that, for a specified period not to exceed an additional 6 months, it is impractical to prepare the conformity analyses which would otherwise be required and the actions cannot be delayed due to overriding concerns for public health and welfare, national security interests and foreign policy commitments; or

(2) For actions which are to be taken after those actions covered by paragraph (e)(1) of this section, the Federal agency makes a new determination as provided in paragraph (e)(1) of this section.

(f) Notwithstanding other requirements of this subpart, actions specified by individual Federal agencies that have met the criteria set forth in either paragraph (g)(1) or (g)(2) of this section and the procedures set forth in paragraph (h) of this section are presumed to conform, except as provided in paragraph (j) of this section.

(g) The Federal agency must meet the criteria for establishing activities that are presumed to conform by fulfilling the requirements set forth in either paragraph (g)(1) or (g)(2) of this section:

(1) The Federal agency must clearly demonstrate using methods consistent with this subpart that the total of direct and indirect emissions from the type of activities which would be presumed to conform would not:

(i) Cause or contribute to any new violation of any standard in any area;

(ii) Interfere with provisions in the applicable SIP for maintenance of any standard;

(iii) Increase the frequency or severity of any existing violation of any standard in any area; or

(iv) Delay timely attainment of any standard or any required interim emission reductions or other milestones in any area including, where applicable, emission levels specified in the applicable SIP for purposes of:

(A) A demonstration of reasonable further progress;

(B) A demonstration of attainment; or

(C) A maintenance plan; or

(2) The Federal agency must provide documentation that the total of direct and indirect emissions from such future actions would be below the emission rates for a conformity determination that are established in paragraph (b) of this section, based, for example, on similar actions taken over recent years.

(h) In addition to meeting the criteria for establishing exemptions set forth in paragraphs (g)(1) or (g)(2) of this section, the following procedures must also be complied with to presume that activities will conform:

(1) The Federal agency must identify through publication in the FEDERAL REGISTER its list of proposed activities that are presumed to conform and the basis for the presumptions;

(2) The Federal agency must notify the appropriate EPA Regional Office(s), State and local air quality agencies and, where applicable, the agency designated under section 174 of the Act and the MPO and provide at least 30 days for the public to comment on the list of proposed activities presumed to conform;

(3) The Federal agency must document its response to all the comments received and make the comments, response, and final list of activities available to the public upon request; and

(4) The Federal agency must publish the final list of such activities in the FEDERAL REGISTER.

(i) Notwithstanding the other requirements of this subpart, when the total of direct and indirect emissions of any pollutant from a Federal action does not equal or exceed the rates specified in paragraph (b) of this section, but represents 10 percent or more of a

nonattainment or maintenance area's total emissions of that pollutant, the action is defined as a regionally significant action and the requirements of § 93.150 and §§ 93.155 through 93.160 shall apply for the Federal action.

(j) Where an action otherwise presumed to conform under paragraph (f) of this section is a regionally significant action or does not in fact meet one of the criteria in paragraph (g)(1) of this section, that action shall not be presumed to conform and the requirements of § 93.150 and §§ 93.155 through 93.160 shall apply for the Federal action.

(k) The provisions of this subpart shall apply in all nonattainment and maintenance areas.

§ 93.154 Conformity analysis.

Any Federal department, agency, or instrumentality of the Federal government taking an action subject to this subpart must make its own conformity determination consistent with the requirements of this subpart. In making its conformity determination, a Federal agency must consider comments from any interested parties. Where multiple Federal agencies have jurisdiction for various aspects of a project, a Federal agency may choose to adopt the analysis of another Federal agency or develop its own analysis in order to make its conformity determination.

§ 93.155 Reporting requirements.

(a) A Federal agency making a conformity determination under § 93.158 must provide to the appropriate EPA Regional Office(s), State and local air quality agencies and, where applicable, affected Federal land managers, the agency designated under section 174 of the Act and the MPO a 30 day notice which describes the proposed action and the Federal agency's draft conformity determination on the action.

(b) A Federal agency must notify the appropriate EPA Regional Office(s), State and local air quality agencies and, where applicable, affected Federal land managers, the agency designated under section 174 of the Clean Air Act and the MPO within 30 days after making a final conformity determination under § 93.158.

§ 93.156 Public participation.

(a) Upon request by any person regarding a specific Federal action, a Federal agency must make available for review its draft conformity determination under § 93.158 with supporting materials which describe the analytical methods and conclusions relied upon in making the applicability analysis and draft conformity determination.

(b) A Federal agency must make public its draft conformity determination under § 93.158 by placing a notice by prominent advertisement in a daily newspaper of general circulation in the area affected by the action and by providing 30 days for written public comment prior to taking any formal action on the draft determination. This comment period may be concurrent with any other public involvement, such as occurs in the NEPA process.

(c) A Federal agency must document its response to all the comments received on its draft conformity determination under § 93.158 and make the comments and responses available, upon request by any person regarding a specific Federal action, within 30 days of the final conformity determination.

(d) A Federal agency must make public its final conformity determination under § 93.158 for a Federal action by placing a notice by prominent advertisement in a daily newspaper of general circulation in the area affected by the action within 30 days of the final conformity determination.

§ 93.157 Frequency of conformity determinations.

(a) The conformity status of a Federal action automatically lapses 5 years from the date a final conformity determination is reported under § 93.155, unless the Federal action has been completed or a continuous program has been commenced to implement that Federal action within a reasonable time.

(b) Ongoing Federal activities at a given site showing continuous progress are not new actions and do not require periodic redeterminations so long as such activities are within the scope of the final conformity determination reported under § 93.155.

(c) If, after the conformity determination is made, the Federal action is changed so that there is an increase in the total of direct and indirect emissions, above the levels in §93.153(b), a new conformity determination is required.

§93.158 Criteria for determining conformity of general Federal actions.

(a) An action required under §93.153 to have a conformity determination for a specific pollutant, will be determined to conform to the applicable SIP if, for each pollutant that exceeds the rates in §93.153(b), or otherwise requires a conformity determination due to the total of direct and indirect emissions from the action, the action meets the requirements of paragraph (c) of this section, and meets any of the following requirements:

(1) For any criteria pollutant, the total of direct and indirect emissions from the action are specifically identified and accounted for in the applicable SIP's attainment or maintenance demonstration;

(2) For ozone or nitrogen dioxide, the total of direct and indirect emissions from the action are fully offset within the same nonattainment or maintenance area through a revision to the applicable SIP or a similarly enforceable measure that effects emission reductions so that there is no net increase in emissions of that pollutant;

(3) For any criteria pollutant, except ozone and nitrogen dioxide, the total of direct and indirect emissions from the action meet the requirements:

(i) Specified in paragraph (b) of this section, based on areawide air quality modeling analysis and local air quality modeling analysis; or

(ii) Meet the requirements of paragraph (a)(5) of this section and, for local air quality modeling analysis, the requirement of paragraph (b) of this section;

(4) For CO or PM–10—

(i) Where the State agency primarily responsible for the applicable SIP determines that an areawide air quality modeling analysis is not needed, the total of direct and indirect emissions from the action meet the requirements specified in paragraph (b) of this section, based on local air quality modeling analysis; or

(ii) Where the State agency primarily responsible for the applicable SIP determines that an areawide air quality modeling analysis is appropriate and that a local air quality modeling analysis is not needed, the total of direct and indirect emissions from the action meet the requirements specified in paragraph (b) of this section, based on areawide modeling, or meet the requirements of paragraph (a)(5) of this section; or

(5) For ozone or nitrogen dioxide, and for purposes of paragraphs (a)(3)(11) and (a)(4)(ii) of this section, each portion of the action or the action as a whole meets any of the following requirements:

(i) Where EPA has approved a revision to an area's attainment or maintenance demonstration after 1990 and the State makes a determination as provided in paragraph (a)(5)(i)(A) of this section or where the State makes a commitment as provided in paragraph (a)(5)(i)(B) of this section:

(A) The total of direct and indirect emissions from the action (or portion thereof) is determined and documented by the State agency primarily responsible for the applicable SIP to result in a level of emissions which, together with all other emissions in the nonattainment (or maintenance) area, would not exceed the emissions budgets specified in the applicable SIP;

(B) The total of direct and indirect emissions from the action (or portion thereof) is determined by the State agency responsible for the applicable SIP to result in a level of emissions which, together with all other emissions in the nonattainment (or maintenance) area, would exceed an emissions budget specified in the applicable SIP and the State Governor or the Governor's designee for SIP actions makes a written commitment to EPA which includes the following:

(*1*) A specific schedule for adoption and submittal of a revision to the SIP which would achieve the needed emission reductions prior to the time emissions from the Federal action would occur;

(*2*) Identification of specific measures for incorporation into the SIP which

would result in a level of emissions which, together with all other emissions in the nonattainment or maintenance area, would not exceed any emissions budget specified in the applicable SIP;

(*3*) A demonstration that all existing applicable SIP requirements are being implemented in the area for the pollutants affected by the Federal action, and that local authority to implement additional requirements has been fully pursued;

(*4*) A determination that the responsible Federal agencies have required all reasonable mitigation measures associated with their action; and

(*5*) Written documentation including all air quality analyses supporting the conformity determination;

(C) Where a Federal agency made a conformity determination based on a State commitment under paragraph (a)(5)(i)(B) of this section, such a State commitment is automatically deemed a call for a SIP revision by EPA under section 110(k)(5) of the Act, effective on the date of the Federal conformity determination and requiring response within 18 months or any shorter time within which the State commits to revise the applicable SIP;

(ii) The action (or portion thereof), as determined by the MPO, is specifically included in a current transportation plan and transportation improvement program which have been found to conform to the applicable SIP under 40 CFR part 51, subpart T, or 40 CFR part 93, subpart A;

(iii) The action (or portion thereof) fully offsets its emissions within the same nonattainment or maintenance area through a revision to the applicable SIP or an equally enforceable measure that effects emission reductions equal to or greater than the total of direct and indirect emissions from the action so that there is no net increase in emissions of that pollutant;

(iv) Where EPA has not approved a revision to the relevant SIP attainment or maintenance demonstration since 1990, the total of direct and indirect emissions from the action for the future years (described in § 93.159(d) do not increase emissions with respect to the baseline emissions:

(A) The baseline emissions reflect the historical activity levels that occurred in the geographic area affected by the proposed Federal action during:

(*1*) Calendar year 1990;

(*2*) The calendar year that is the basis for the classification (or, where the classification is based on multiple years, the most representative year), if a classification is promulgated in 40 CFR part 81; or

(*3*) The year of the baseline inventory in the PM–10 applicable SIP;

(B) The baseline emissions are the total of direct and indirect emissions calculated for the future years (described in § 93.159(d)) using the historic activity levels (described in paragraph (a)(5)(iv)(A) of this section) and appropriate emission factors for the future years; or

(v) Where the action involves regional water and/or wastewater projects, such projects are sized to meet only the needs of population projections that are in the applicable SIP.

(b) The areawide and/or local air quality modeling analyses must:

(1) Meet the requirements in § 93.159; and

(2) Show that the action does not:

(i) Cause or contribute to any new violation of any standard in any area; or

(ii) Increase the frequency or severity of any existing violation of any standard in any area.

(c) Notwithstanding any other requirements of this section, an action subject to this subpart may not be determined to conform to the applicable SIP unless the total of direct and indirect emissions from the action is in compliance or consistent with all relevant requirements and milestones contained in the applicable SIP, such as elements identified as part of the reasonable further progress schedules, assumptions specified in the attainment or maintenance demonstration, prohibitions, numerical emission limits, and work practice requirements.

(d) Any analyses required under this section must be completed, and any mitigation requirements necessary for a finding of conformity must be identified before the determination of conformity is made.

§93.159 Procedures for conformity determinations of general Federal actions.

(a) The analyses required under this subpart must be based on the latest planning assumptions.

(1) All planning assumptions must be derived from the estimates of population, employment, travel, and congestion most recently approved by the MPO, or other agency authorized to make such estimates, where available.

(2) Any revisions to these estimates used as part of the conformity determination, including projected shifts in geographic location or level of population, employment, travel, and congestion, must be approved by the MPO or other agency authorized to make such estimates for the urban area.

(b) The analyses required under this subpart must be based on the latest and most accurate emission estimation techniques available as described below, unless such techniques are inappropriate. If such techniques are inappropriate and written approval of the EPA Regional Administrator is obtained for any modification or substitution, they may be modified or another technique substituted on a case-by-case basis or, where appropriate, on a generic basis for a specific Federal agency program.

(1) For motor vehicle emissions, the most current version of the motor vehicle emissions model specified by EPA and available for use in the preparation or revision of SIPs in that State must be used for the conformity analysis as specified in paragraphs (b)(1)(i) and (ii) of this section:

(i) The EPA must publish in the FEDERAL REGISTER a notice of availability of any new motor vehicle emissions model; and

(ii) A grace period of 3 months shall apply during which the motor vehicle emissions model previously specified by EPA as the most current version may be used. Conformity analyses for which the analysis was begun during the grace period or no more than 3 years before the FEDERAL REGISTER notice of availability of the latest emission model may continue to use the previous version of the model specified by EPA.

(2) For non-motor vehicle sources, including stationary and area source emissions, the latest emission factors specified by EPA in the ''Compilation of Air Pollutant Emission Factors (AP–42)''[1] must be used for the conformity analysis unless more accurate emission data are available, such as actual stack test data from stationary sources which are part of the conformity analysis.

(c) The air quality modeling analyses required under this subpart must be based on the applicable air quality models, data bases, and other requirements specified in the most recent version of the ''Guideline on Air Quality Models (Revised)'' (1986), including supplements (EPA publication no. 450/2–78–027R)[2], unless:

(1) The guideline techniques are inappropriate, in which case the model may be modified or another model substituted on a case-by-case basis or, where appropriate, on a generic basis for a specific Federal agency program; and

(2) Written approval of the EPA Regional Administrator is obtained for any modification or substitution.

(d) The analyses required under this subpart, except §93.158(a)(1), must be based on the total of direct and indirect emissions from the action and must reflect emission scenarios that are expected to occur under each of the following cases:

(1) The Act mandated attainment year or, if applicable, the farthest year for which emissions are projected in the maintenance plan;

(2) The year during which the total of direct and indirect emissions from the action is expected to be the greatest on an annual basis; and

(3) Any year for which the applicable SIP specifies an emissions budget.

§93.160 Mitigation of air quality impacts.

(a) Any measures that are intended to mitigate air quality impacts must be identified and the process for implementation and enforcement of such measures must be described, including

[1] Copies may be obtained from the Technical Support Division of OAQPS, EPA, MD–14, Research Triangle Park, NC 27711.

[2] See footnote 1 at §93.159(b)(2).

an implementation schedule containing explicit timelines for implementation.

(b) Prior to determining that a Federal action is in conformity, the Federal agency making the conformity determination must obtain written commitments from the appropriate persons or agencies to implement any mitigation measures which are identified as conditions for making conformity determinations.

(c) Persons or agencies voluntarily committing to mitigation measures to facilitate positive conformity determinations must comply with the obligations of such commitments.

(d) In instances where the Federal agency is licensing, permitting or otherwise approving the action of another governmental or private entity, approval by the Federal agency must be conditioned on the other entity meeting the mitigation measures set forth in the conformity determination.

(e) When necessary because of changed circumstances, mitigation measures may be modified so long as the new mitigation measures continue to support the conformity determination. Any proposed change in the mitigation measures is subject to the reporting requirements of § 93.156 and the public participation requirements of § 93.157.

(f) The implementation plan revision required in § 93.151 shall provide that written commitments to mitigation measures must be obtained prior to a positive conformity determination and that such commitments must be fulfilled.

(g) After a State revises its SIP to adopt its general conformity rules and EPA approves that SIP revision, any agreements, including mitigation measures, necessary for a conformity determination will be both State and federally enforceable. Enforceability through the applicable SIP will apply to all persons who agree to mitigate direct and indirect emissions associated with a Federal action for a conformity determination.

PART 94 [RESERVED]

PART 95—MANDATORY PATENT LICENSES

Sec.
95.1 Definitions.
95.2 Petition for mandatory license.
95.3 Findings prior to application to Attorney General.
95.4 Limitations on mandatory licenses.

AUTHORITY: 42 U.S.C. 7609; Sec. 104, Pub. L. 103–182, 107 Stat. 2057, 2064.

SOURCE: 59 FR 67638, Dec. 30, 1994, unless otherwise noted.

§ 95.1 Definitions.

(a) As used in this part, all terms not defined in this section shall have the meaning given them by the Act.

(b) *Act* means the Clean Air Act, as amended (42 U.S.C. §§ 7401–7671).

(c) *Agency* means the Environmental Protection Agency.

(d) *Administrator* means the Administrator of the Environmental Protection Agency.

§ 95.2 Petition for mandatory license.

(a) Any party required to comply with sections 111, 112 or 202 of the Act (42 U.S.C. 7411, 7412 or 7521) may petition to the Administrator for a mandatory patent license pursuant to section 308 of the Act (42 U.S.C. 7608), under a patent that the petitioner maintains is necessary to enable the petitioner to comply with Sections 111, 112 or 202 of the Act.

(b)(1) Each petition shall be signed by the petitioner and shall state the petitioner's name and address. If the petitioner is a corporation, the petition shall be signed by an authorized officer of the corporation, and the petition shall indicate the state of incorporation. Where the petitioner elects to be represented by counsel, a signed notice to that effect shall be included with the petition at the time of filing.

(2) Each petition shall include a copy of the patent under which a mandatory patent license is sought. The petition shall identify all current owners of the patent and shall include a copy of all assignment documents relevant to the

patent that are available from the United States Patent and Trademark Office.

(3) Each petition must identify any person whose interest the petitioner believes may be affected by the grant of the license to which the petition is directed.

(4) Each petition must contain a concise statement of all of the essential facts upon which it is based. No particular form of statement is required. Each petition shall be verified by the petitioner or by the person having the best knowledge of such facts. In the case of facts stated on information and belief, the source of such information and grounds of belief shall be given. The statement of facts shall include the following:

(i) An identification of the provisions of the Act and/or regulations thereunder that the petitioner maintains petitioner will be able to comply with if the petitioner is granted the patent license that is the subject of the petition;

(ii) An identification of the nature and purpose of the petitioner's intended use of the patent license;

(iii) An explanation of the relationship between the patented technology and the activities to which petitioner proposes to apply the patented technology, including an estimate of the effect on such activities stemming from the grant or denial of the patent license;

(iv) A summary of facts demonstrating that the patent under which a mandatory patent license is sought is being used or is intended for public or commercial use;

(v) An explanation of why a mandatory patent license is necessary for the petitioner to comply with the requirements of sections 111, 112 or 202 of the Act, and why the patented technology is not otherwise available;

(vi) An explanation of why there are no other reasonable alternatives for accomplishing compliance with sections 111, 112 or 202 of the Act;

(vii) An explanation of why the unavailability of a mandatory patent license may result in a substantial lessening of competition or a tendency to create a monopoly in any line of commerce in any section of the United States;

(viii) A summary of efforts made by the petitioner to obtain a patent license from the owner of the patent, including the terms and conditions of any patent license proposed by petitioner to the patent owner; and

(ix) The terms, if any, on which the owner of the patent has proposed to grant the petitioner a patent license.

(5) Each petition shall include a proposed patent license that states all of the terms and conditions that the petitioner proposes for the patent license.

(6) Petitions shall be addressed to the Assistant Administrator for Air and Radiation, Mail Code 6101, U.S. Environmental Protection Agency, Washington, DC 20460.

(c) Petitions that do not include all of the information required in paragraph (b) of this section shall be returned to the petitioner. The petitioner may supplement the petition and resubmit the petition.

(d) If the Administrator, or the Administrator's designee, finds that the criteria in §95.3 are not met, or otherwise decides to deny the petition, a denial of the petition shall be sent to the petitioner, along with an explanation of the reasons for the denial.

(e) If the Administrator, or the Administrator's designee, finds that the criteria in §95.3 are met and decides to apply to the Attorney General for a patent license under section 308 of the Act, notice of such application shall be given to the petitioner, along with a copy of the application sent to the Attorney General.

§95.3 Findings prior to application to Attorney General.

The Administrator, or the Administrator's designee, may apply to the Attorney General for a mandatory patent license pursuant to section 308 of the Act (42 U.S.C. 7608) either in response to a petition under §95.2 or on the Administrator's or designee's own initiative, only after expressly finding that each one of the following mandatory criteria is met:

(a) The application is for a patent license covering no more than one patent;

(b) The party to whom the proposed patent license is to be granted has presented the Administrator or designee with evidence that such party has made reasonable efforts to obtain a patent license from the patent owner with terms similar to the license terms to be proposed in the application to the Attorney General;

(c) The patent under which a patent license is sought in the application to the Attorney General is being used or is intended for public or commercial use;

(d) The mandatory patent license is necessary for a party to comply with the requirements of sections 111, 112 or 202 of the Act (42 U.S.C. 7411, 7412 or 7521);

(e) The patented technology is not otherwise reasonably available, and there are no other reasonable alternatives for accomplishing compliance with sections 111, 112 or 202 of the Act (42 U.S.C. 7411, 7412 or 7521); and

(f) The unavailability of a mandatory patent license may result in a substantial lessening of competition or a tendency to create a monopoly in any line of commerce in any section of the United States.

§ 95.4 Limitations on mandatory licenses

(a) If the Administrator, or the Administrator's designee, decides to apply to the Attorney General for a mandatory patent license in accordance with § 95.3, the application shall include a proposed patent license with the following limitations:

(1) The scope and duration of the patent license shall be limited to that necessary to permit the proposed licensee to comply with the requirements the Act;

(2) The patent license shall be non-exclusive;

(3) The patent license shall be non-assignable, except with that part of the enterprise or goodwill that enjoys the license;

(4) The patent license shall be for use of the licensed technology in the United States only;

(5) The patent license shall extend only to those uses necessary to enable the licensee to comply with sections 111, 112 or 202 of the Act (42 U.S.C. 7411, 7412 or 7521);

(6) The patent license shall provide for termination, subject to adequate protections of the legitimate interests of the licensed party, when the circumstances that made the compulsory patent license necessary cease to exist and are unlikely to recur; and

(7) The patent license shall provide for adequate remuneration that takes into account the economic value of the license.

(b) The Administrator, or the Administrator's designee, may decide as appropriate to include additional conditions, terms or limitations on the scope of the patent license for which application is made to the Attorney General.

PARTS 96–99 [RESERVED]

SUBCHAPTER D—WATER PROGRAMS

PART 100 [RESERVED]

PART 104—PUBLIC HEARINGS ON EFFLUENT STANDARDS FOR TOXIC POLLUTANTS

Sec.
104.1 Applicability.
104.2 Definitions.
104.3 Notice of hearing; objection; public comment.
104.4 Statement of basis and purpose.
104.5 Docket and record.
104.6 Designation of Presiding Officer.
104.7 Powers of Presiding Officer.
104.8 Prehearing conferences.
104.9 Admission of evidence.
104.10 Hearing procedures.
104.11 Briefs and findings of fact.
104.12 Certification of record.
104.13 Interlocutory and post-hearing review of rulings of the Presiding Officer; motions.
104.14 Tentative and final decision by the Administrator.
104.15 Promulgation of standards.
104.16 Filing and time.

AUTHORITY: Secs. 501 and 307(a) of the Federal Water Pollution Control Act, as amended (33 U.S.C. 1251 *et seq.*, Pub. L. 92–500, 86 Stat. 816).

SOURCE: 41 FR 17902, Apr. 29, 1976, unless otherwise noted.

§104.1 Applicability.

This part shall be applicable to hearings required by statute to be held in connection with the establishment of toxic pollutant effluent standards under section 307(a) of the Act.

§104.2 Definitions.

As used in this part, the term:

(a) *Act* means the Federal Water Pollution Control Act, as amended, 33 U.S.C. 1251 *et seq.*, Public Law 92–500, 86 Stat. 816.

(b) *Administrator* means the Administrator of the Environmental Protection Agency, or any employee of the Agency to whom the Administrator may by order delegate his authority to carry out his functions under section 307(a) of the Act, or any person who shall by operation of law be authorized to carry out such functions.

(c) *Agency* means the Environmental Protection Agency.

(d) *Hearing Clerk* means the Hearing Clerk, U.S. Environmental Protection Agency, 401 M Street SW., Washington, DC 20460.

(e) *Party* means the Environmental Protection Agency as the proponent of an effluent standard or standards, and any person who files an objection pursuant to §104.3 hereof.

(f) *Person* means an individual, corporation, partnership, association, state, municipality or other political subdivision of a state, or any interstate body.

(g) *Effluent standard* means any effluent standard or limitation, which may include a prohibition of any discharge, established or proposed to be established for any toxic pollutant under section 307(a) of the Act.

(h) *Presiding Officer* means the Chief Administrative Law Judge of the Agency or a person designated by the Chief Administrative Law Judge or by the Administrator to preside at a hearing under this part, in accordance with §104.6 hereof.

§104.3 Notice of hearing; objection; public comment.

(a) *Notice of hearing.* Whenever the Administrator publishes any proposed effluent standard, he shall simultaneously publish a notice of a public hearing to be held within thirty days following the date of publication of the proposed standard. Any person who has any objection to a proposed standard may file with the hearing clerk a concise statement of any such objection. No person may participate in the hearing on the proposed toxic pollutant effluent standards unless the hearing clerk has received within 25 days of the publication of the notice of the proposed standards a statement of objection as herein described. In exceptional circumstances and for good cause shown the Presiding Officer may allow an objection to be filed after the filing deadline prescribed in the preceding

sentence, which good cause must include at a minimum lack of actual notice on the part of the objector or any representative of such objector of the proposed standards despite his exercise of due diligence, so long as such later filing will not cause undue delay in the proceedings or prejudice to any of the parties.

(b) *Objections.* Any objection to a proposed standard which is filed pursuant to paragraph (a) of this section shall meet the following requirements:

(1) It shall be filed in triplicate with the hearing clerk within the time prescribed in paragraph (a) of this section;

(2) It shall state concisely and with particularity each portion of the proposed standard to which objection is taken; to the greatest extent feasible it shall state the basis for such objection;

(3) To the greatest extent feasible it shall (i) state specifically the objector's proposed modification to any such standard proposed by the Agency to which objection is taken, (ii) set forth the reasons why such modification is sought, and (iii) identify and describe the scientific or other basis for such proposed modification, including reference to any pertinent scientific data or authority in support thereof.

Any objection which fails to comply with the foregoing provisions shall not be accepted for filing. The Presiding Officer shall promptly notify any person whose objection is not accepted for any of the reasons set forth in this section, stating the reasons therefor.

(c) *Data in support of objection or modification.* In the event that the time prescribed for filing objections pursuant to paragraphs (a) and (b) of this section is insufficient to permit an objecting party to fully set forth with such objection the basis therefor together with the information and data specified in paragraph (b)(3) of this section, he may so state at the time of the filing of such objection, and file a more complete statement of such basis, information, and data (hereinafter referred to as ''supplemental data'') within the time prescribed by this paragraph (c). The supplemental data herein described shall be filed not later than 40 days following publication of the proposed effluent standards.

(d) *Public comment.* The notice required under paragraph (a) of this section shall also provide for the submission to the Agency of written comments on the proposed rulemaking by interested persons not filing objections pursuant to this section as hereinabove described, and hence not participating in the hearing as parties. The notice shall fix a time deadline for the submission of such comments which shall be not later than the date set for commencement of the hearing. Such comments shall be received in evidence at the commencement of the hearing. The Administrator in making any decision based upon the record shall take into account the unavailability of cross-examination in determining the weight to be accorded such comments.

(e) *Promulgation in absence of objection.* If no objection is filed pursuant to this section, then the Administrator shall promulgate the final standards on the basis of the Agency's statement of basis and purpose and any public comments received pursuant to paragraph (d) of this section.

§ 104.4 Statement of basis and purpose.

Whenever the Administrator publishes a proposed effluent standard, the notice thereof published in the FEDERAL REGISTER shall include a statement of the basis and purpose of the standard or a summary thereof. This statement shall include:

(a) The purpose of the proposed standard;

(b) An explanation of how the proposed standard was derived;

(c) Scientific and technical data and studies supporting the proposed standard or references thereto if the materials are published or otherwise readily available; and

(d) Such other information as may be reasonably required to set forth fully the basis of the standard.

Where the notice of the proposed rulemaking summarizes the full statement of basis and purpose, or incorporates documents by reference, the documents thus summarized or incorporated by reference shall thereupon be made available by the Agency for inspection and copying by any interested person.

§104.5 Docket and record.

Whenever the Administrator publishes a notice of hearing under this part, the hearing clerk shall promptly establish a docket for the hearing. The docket shall include all written objections filed by any party, any public comments received pursuant to §104.3(d), a verbatim transcript of the hearing, the statement of basis and purpose required by §104.4, and any supporting documents referred to therein, and other documents of exhibits that may be received in evidence or marked for identification by or at the direction of the Presiding Officer, or filed by any party in connection with the hearing. Copies of documents in the docket shall be available to any person upon payment to the Agency of such charges as the Agency may prescribe to cover the costs of duplication. The materials contained in the docket shall constitute the record.

§104.6 Designation of Presiding Officer.

The Chief Administrative Law Judge of the Agency may preside personally at any hearing under this part, or he may designate another Administrative Law Judge as Presiding Officer for the hearing. In the event of the unavailability of any such Administrative Law Judge, the Administrator may designate a Presiding Officer. No person who has any personal pecuniary interest in the outcome of a proceeding under this part, or who has participated in the development or enforcement of any standard or proposed standard at issue in a proceeding hereunder, shall serve as Presiding Officer in such proceeding.

§104.7 Powers of Presiding Officer.

The Presiding Officer shall have the duty to conduct a fair hearing within the time constraints imposed by section 307(a) of the Act. He shall take all necessary action to avoid delay and to maintain order. He shall have all powers necessary to these ends, including but not limited to the power to:

(a) Rule upon motions and requests;

(b) Change the time and place of the hearing, and adjourn the hearing from time to time or from place to place;

(c) Examine and cross-examine witnesses;

(d) Admit or exclude evidence; and

(e) Require any part or all of the evidence to be submitted in writing and by a certain date.

§104.8 Prehearing conferences.

Prehearing conferences are encouraged for the purposes of simplification of issues, identification and scheduling of evidence and witnesses, the establishment of an orderly framework for the proceedings, the expediting of the hearing, and such other purposes of a similar nature as may be appropriate.

(a) The Presiding Officer on his own motion may, and at the request of any party made within 20 days of the proposal of standards hereunder shall, direct all parties to appear at a specified time and place for an initial hearing session in the nature of a prehearing conference. Matters taken up at the conference may include, without limitation:

(1) Consideration and simplification of any issues of law or fact;

(2) Identification, advance submission, marking for identification, consideration of any objections to admission, and admission of documentary evidence;

(3) Possible stipulations of fact;

(4) The identification of each witness expected to be called by each party, and the nature and substance of his expected testimony;

(5) Scheduling of witnesses where practicable, and limitation of the number of witnesses where appropriate in order to avoid delay or repetition;

(6) If desirable, the segregation of the hearing into separate segments for different provisions of the proposed effluent standards and the establishment of separate service lists;

(7) Encouragement of objecting parties to agree upon and designate lead counsel for objectors with common interests so as to avoid repetitious questioning of witnesses.

(b) The Presiding Officer may, following a prehearing conference, issue an order setting forth the agreements reached by the parties or representatives, the schedule of witnesses, and a statement of issues for the hearing. In addition such order may direct the

parties to file and serve copies of documents or materials, file and serve lists of witnesses which may include a short summary of the expected testimony of each and, in the case of an expert witness, his curriculum vitae, and may contain such other directions as may be appropriate to facilitate the proceedings.

§ 104.9 Admission of evidence.

(a) Where the Presiding Officer has directed identification of witnesses and production of documentation evidence by a certain date, the Presiding Officer may exclude any such evidence, or refuse to allow any witness to testify, when the witness was not identified or the document was not served by the time set by the Presiding Officer. Any such direction with respect to a party's case in chief shall not preclude the use of such evidence or testimony on rebuttal or response, or upon a showing satisfactory to the Presiding Officer that good cause existed for failure to serve testimony or a document or identify a witness by the time required. The Presiding Officer may require direct testimony to be in writing under oath and served by a certain date, and may exclude testimony not so served.

(b) At the first prehearing conference, or at another time before the beginning of the taking of oral testimony to be set by the Presiding Officer, the statement of basis and purpose, together with any publications or reference materials cited therein, except where excluded by stipulation, shall be received in evidence.

(c) The Presiding Officer may exclude evidence which is immaterial, irrelevant, unduly repetitious or cumulative, or would involve undue delay, or which, if hearsay, is not of the sort upon which responsible persons are accustomed to rely.

(d) If relevant and material evidence is contained in a report or document containing immaterial or irrelevant matter, such immaterial or irrelevant matter may be excluded.

(e) Whenever written testimony or a document or object is excluded from evidence by the Presiding Officer, it shall at the request of the proponent be marked for identification. Where oral testimony is permitted by the Presiding Officer, but the Presiding Officer excludes particular oral testimony, the party offering such testimony may make a brief offer of proof.

(f) Any relevant and material documentary evidence, including but not limited to affidavits, published articles, and official documents, regardless of the availability of the affiant or author for cross-examination, may be admitted in evidence, subject to the provisions of paragraphs (a), (c), and (d) of this section. The availability or non-availability of cross-examination shall be considered as affecting the weight to be accorded such evidence in any decision based upon the record.

(g) Official notice may be taken by the Presiding Officer or the Administrator of any matter which could be judicially noticed in the United States District Courts, and of other facts within the specialized knowledge and experience of the Agency. Opposing parties shall be given adequate opportunity to show the contrary.

§ 104.10 Hearing procedures.

(a) Following the admission in evidence of the materials described in § 104.9(b), the Agency shall have the right at the commencement of the hearing to supplement that evidence or to introduce additional relevant evidence. Thereafter the evidence of each objector shall be presented in support of its objection and any proposed modification. The Agency staff shall then be given an opportunity to rebut or respond to the objectors' presentation, including at its option the introduction of evidence which tends to support a standard or standards other than as set forth in the Agency's own initially proposed standards. In the event that evidence which tends to support such other standard or standards is offered and received in evidence, then the objectors may thereafter rebut or respond to any such new evidence.

(b) The burden of proof as to any modification of any standard proposed by the Agency shall be upon the party who advocates such modification to show that the proposed modification is justified based upon a preponderance of the evidence.

(c) Where necessary in order to prevent undue prolongation of the hearing, or to comply with time limitations set forth in the Act, the Presiding Officer may limit the number of witnesses who may testify, and the scope and extent of cross-examination.

(d) A verbatim transcript of the hearing shall be maintained and shall constitute a part of the record.

(e) If a party objects to the admission or rejection of any evidence or to any other ruling of the Presiding Officer during the hearing, he shall state briefly the grounds of such objection. With respect to any ruling on evidence, it shall not be necessary for any party to claim an exception in order to preserve any right of subsequent review.

(f) Any party may at any time withdraw his objection to a proposed effluent standard.

§ 104.11 Briefs and findings of fact.

At the conclusion of the hearing, the Presiding Officer shall set a schedule for the submission by the parties of briefs and proposed findings of fact and conclusions. In establishing the aforesaid time schedule, the Presiding Officer shall consider the time constraints placed upon the parties and the Administrator by the statutory deadlines.

§ 104.12 Certification of record.

As soon as possible after the hearing, the Presiding Officer shall transmit to the hearing clerk the transcript of the testimony and exhibits introduced in the hearing. The Presiding Officer shall attach to the original transcript his certificate stating that, to the best of his knowledge and belief, the transcript is a true transcript of the testimony given at the hearing except in such particulars as he shall specify, and that the exhibits transmitted are all the exhibits as introduced at the hearing with such exceptions as he shall specify.

§ 104.13 Interlocutory and post-hearing review of rulings of the Presiding Officer; motions.

(a) The Presiding Officer may certify a ruling for interlocutory review by the Administrator where a party so requests and the Presiding Officer concludes that (1) the ruling from which review is sought involves an important question as to which there is substantial ground for difference of opinion, and (2) either (i) a subsequent reversal of his ruling would be likely to result in substantial delay or expense if left to the conclusion of the proceedings, or (ii) a ruling on the question by the Administrator would be of material assistance in expediting the hearing. The certificate shall be in writing and shall specify the material relevant to the ruling certified. If the Administrator determines that interlocutory review is not warranted, he may decline to consider the ruling which has been certified.

(b) Where the Presiding Officer declines to certify a ruling the party who had requested certification may apply to the Administrator for interlocutory review, or the Administrator may on his own motion direct that any matter be submitted to him for review, subject to the standards for review set forth in paragraph (a) of this section. An application for review shall be in writing and shall briefly state the grounds relied on. If the Administrator takes no action with respect to such application for interlocutory review within 15 days of its filing, such application shall be deemed to have been denied.

(c) Unless otherwise ordered by the Presiding Officer or the Administrator, the hearing shall continue pending consideration by the Administrator of any ruling or request for interlocutory review.

(d) Unless otherwise ordered by the Presiding Officer or the Administrator, briefs in response to any application for interlocutory review may be filed by any party within five days of the filing of the application for review.

(e) Failure to request or obtain interlocutory review does not waive the rights of any party to complain of a ruling following completion of the hearing. Within five days following the close of a hearing under this part, any party may apply to the Administrator for post-hearing review of any procedural ruling, or any ruling made by the Presiding Officer concerning the admission or exclusion of evidence to which timely objection was made. Within seven days following the filing

of any such application any other party may file a brief in response thereto.

(f) If the Administrator on review under paragraph (e) of this section determines that evidence was improperly excluded, he may order its admission without remand for further proceedings, or may remand with such instructions as he deems appropriate concerning cross-examination, or opportunity for any party to submit further evidence, with respect to such evidence as he directs should be admitted. In making his determination whether to remand, the Administrator shall consider whether the statutory time restraints permit a remand, and whether it would be constructive to allow cross-examination or further evidence with respect to the newly admitted evidence. If evidence is admitted without cross-examination, the Administrator shall consider the lack of opportunity for cross-examination in determining the weight to be given such evidence.

(g) Motions shall be brief, in writing, and may be filed at any time following the publication of the proposed effluent standards, unless otherwise ordered by the Presiding Officer or the Administrator. Unless otherwise ordered or provided in these rules, responses to motions may be filed within seven days of the actual filing of the motion with the hearing clerk.

§ 104.14 Tentative and final decision by the Administrator.

(a) As soon as practicable following the certification of the record and the filing by the parties of briefs and proposed findings of fact and conclusions under § 104.11, the Administrator, with such staff assistance as he deems necessary and appropriate, shall review the entire record and prepare and file a tentative decision based thereon. The tentative decision shall include findings of fact and conclusions, and shall be filed with the hearing clerk who shall at once transmit a copy thereof to each party who participated at the hearing, or his attorney or other representative.

(b) Upon filing of the tentative decision, the Administrator may allow a reasonable time for the parties to file with him any exceptions to the tenative decision, a brief in support of such exceptions containing appropriate references to the record, and any proposed changes in the tentative decision. Such materials shall, upon submission, become part of the record. As soon as practicable after the filing thereof the Administrator shall prepare and file a final decision, copies of which shall be transmitted to the parties or their representatives in the manner prescribed in paragraph (a) of this section.

(c) In the event that the Administrator determines that due and timely execution of his functions, including compliance with time limitations established by law, imperatively and unavoidably so requires, he may omit the preparation and filing of the tentative decision and related procedures set forth in paragraph (b) of this section, and shall instead prepare and file a final decision, copies of which shall be transmitted to the parties or their representatives in the manner prescribed in paragraph (a) of this section.

(d) Any decision rendered by the Administrator pursuant to this section shall include a statement of his findings and conclusions, and the reasons and basis therefor, and shall indicate the toxic pollutant effluent standard or standards which the Administrator is promulgating or intends to promulgate based thereon.

§ 104.15 Promulgation of standards.

Upon consideration of the record, at the time of his final decision the Administrator shall determine whether the proposed effluent standard or standards should be promulgated as proposed, or whether any modification thereof is justified based upon a proponderance of the evidence adduced at the hearing, regardless of whether or not such modification was actually proposed by any objecting party. If he determines that a modification is not justified, he shall promulgate the standard or standards as proposed. If he determines that a modification is justified, he shall promulgate a standard or standards as so modified.

§104.16 Filing and time.

(a) All documents or papers required or authorized by the foregoing provisions of this part including, but not limited to, motions, applications for review, and briefs, shall be filed in duplicate with the hearing clerk, except as otherwise expressly provided in these rules. Any document or paper so required or authorized to be filed with the hearing clerk, if it is filed during the course of the hearing, shall be also filed with the Presiding Officer. A copy of each document or paper filed by any party with the Presiding Officer, with the hearing clerk, or with the Administrator shall be served upon all other parties, except to the extent that the list of parties to be so served may be modified by order of the Presiding Officer, and each such document or paper shall be accompanied by a certificate of such service.

(b) A party may be represented in any proceeding under this part by an attorney or other authorized representative. When any document or paper is required under these rules to be served upon a party such service shall be made upon such attorney or other representative.

(c) Except where these rules or an order of the Presiding Officer require receipt of a document by a certain date, any document or paper required or authorized to be filed by this part shall be deemed to be filed when postmarked, or in the case of papers delivered other than by mail, when received by the hearing clerk.

(d) Sundays and legal holidays shall be included in computing the time allowed for the filing of any document or paper, provided, that when such time expires on a Sunday or legal holiday, such period shall be extended to include the next following business day.

PART 108—EMPLOYEE PROTECTION HEARINGS

Sec.

108.1 Applicability.
108.2 Definitions.
108.3 Request for investigation.
108.4 Investigation by Regional Administrator.
108.5 Procedure.
108.6 Recommendations.
108.7 Hearing before Administrator.

AUTHORITY: Sec. 507(e), Pub. L. 92–500, 86 Stat. 816 (33 U.S.C. 1251 *et seq.*).

SOURCE: 39 FR 15398, May 3, 1974, unless otherwise noted.

§108.1 Applicability.

This part shall be applicable to investigations and hearings required by section 507(e) of the Federal Water Pollution Control Act, as amended, 33 U.S.C. 1251 *et seq.* (Pub. L. 92–500).

§108.2 Definitions.

As used in this part, the term:

(a) *Act* means the Federal Water Pollution Control Act, as amended;

(b) *Effluent limitation* means any effluent limitation which is established as a condition of a permit issued or proposed to be issued by a State or by the Environmental Protection Agency pursuant to section 402 of the Act; any toxic or pretreatment effluent standard established under section 307 of the Act; any standard of performance established under section 306 of the Act; and any effluent limitation established under section 302, section 316, or section 318 of the Act.

(c) *Order* means any order issued by the Administrator under section 309 of the Act; any order issued by a State to secure compliance with a permit, or condition thereof, issued under a program approved pursuant to section 402 of the Act; or any order issued by a court in an action brought pursuant to section 309 or section 505 of the Act.

(d) *Party* means an employee filing a request under §108.3, any employee similarly situated, the employer of any such employee, and the Regional Administrator or his designee.

(e) *Administrator* or *Regional Administrator* means the Administrator or a Regional Administrator of the Environmental Protection Agency.

§108.3 Request for investigation.

Any employee who is discharged or laid-off, threatened with discharge or lay-off, or otherwise discriminated against by any person because of the alleged results of any effluent limitation or order issued under the Act, or any representative of such employee,

may submit a request for an investigation under this part to the Regional Administrator of the region in which such discrimination is alleged to have occurred.

§ 108.4 Investigation by Regional Administrator.

Upon receipt of any request meeting the requirements of § 108.3, the Regional Administrator shall conduct a full investigation of the matter, in order to determine whether the request may be related to an effluent limitation or order under the Act. Following the investigation, the Regional Administrator shall notify the employee requesting the investigation (or the employee's representative) and the employer of such employee, in writing, of his preliminary findings and conclusions. The employee, the representative of such employee, or the employer may within fifteen days following receipt of the preliminary findings and conclusions of the Regional Administrator request a hearing under this part. Upon receipt of such a request, the Regional Administrator, with the concurrence of the Chief Administrative Law Judge, shall publish notice of a hearing to be held not less than 30 days following the date of such publication where he determines that there are factual issues concerning the existence of the alleged discrimination or its relationship to an effluent limitation or order under the Act. The notice shall specify a date before which any party (or representative of such party) may submit a request to appear.

§ 108.5 Procedure.

Any hearing held pursuant to this part shall be of record and shall be conducted according to the requirements of 5 U.S.C. 554. The Administrative Law Judge shall conduct the hearing in an orderly and expeditious manner. By agreement of the parties, he may dismiss the hearing. The Administrative Law Judge, on his own motion, or at the request of any party, shall have the power to hold prehearing conferences, to issue subpoenas for the attendance and testimony of witnesses and the production of relevant papers, books, and documents, and he may administer oaths. The Regional Administrator, and any party submitting a request pursuant to § 108.3 or § 108.4, or counsel or other representative of such party or the Regional Administrator, may appear and offer evidence at the hearing.

§ 108.6 Recommendations.

At the conclusion of any hearing under this part, the Administrative Law Judge shall, based on the record, issue tentative findings of fact and recommendations concerning the alleged discrimination, and shall submit such tentative findings and recommendations to the Administrator. The Administrator shall adopt or modify the findings and recommendations of the Administrative Law Judge, and shall make copies of such findings and recommendations available to the complaining employee, the employer, and the public.

§ 108.7 Hearing before Administrator.

At his option, the Administrator may exercise any powers of an Administrative Law Judge with respect to hearings under this part.

PART 109—CRITERIA FOR STATE, LOCAL AND REGIONAL OIL REMOVAL CONTINGENCY PLANS

Sec.
109.1 Applicability.
109.2 Definitions.
109.3 Purpose and scope.
109.4 Relationship to Federal response actions.
109.5 Development and implementation criteria for State, local and regional oil removal contingency plans.
109.6 Coordination.

AUTHORITY: Sec. 11(j)(1)(B), 84 Stat. 96, 33 U.S.C. 1161(j)(1)(B).

SOURCE: 36 FR 22485, Nov. 25, 1971, unless otherwise noted.

§ 109.1 Applicability.

The criteria in this part are provided to assist State, local and regional agencies in the development of oil removal contingency plans for the inland navigable waters of the United States and all areas other than the high seas, coastal and contiguous zone waters, coastal and Great Lakes ports and harbors and such other areas as may be

agreed upon between the Environmental Protection Agency and the Department of Transportation in accordance with section 11(j)(1)(B) of the Federal Act, Executive Order No. 11548 dated July 20, 1970 (35 FR 11677) and §306.2 of the National Oil and Hazardous Materials Pollution Contingency Plan (35 FR 8511).

§109.2 Definitions.

As used in these guidelines, the following terms shall have the meaning indicated below:

(a) *Oil* means oil of any kind or in any form, including, but not limited to, petroleum, fuel oil, sludge, oil refuse, and oil mixed with wastes other than dredged spoil.

(b) *Discharge* includes, but is not limited to, any spilling, leaking, pumping, pouring, emitting, emptying, or dumping.

(c) *Remove* or *removal* refers to the removal of the oil from the water and shorelines or the taking of such other actions as may be necessary to minimize or mitigate damage to the public health or welfare, including, but not limited to, fish, shellfish, wildlife, and public and private property, shorelines, and beaches.

(d) *Major disaster* means any hurricane, tornado, storm, flood, high water, wind-driven water, tidal wave, earthquake, drought, fire, or other catastrophe in any part of the United States which, in the determination of the President, is or threatens to become of sufficient severity and magnitude to warrant disaster assistance by the Federal Government to supplement the efforts and available resources of States and local governments and relief organizations in alleviating the damage, loss, hardship, or suffering caused thereby.

(e) *United States* means the States, the District of Columbia, the Commonwealth of Puerto Rico, the Canal Zone, Guam, American Samoa, the Virgin Islands, and the Trust Territory of the Pacific Islands.

(f) *Federal Act* means the Federal Water Pollution Control Act, as amended, 33 U.S.C. 1151 *et seq.*

§109.3 Purpose and scope.

The guidelines in this part establish minimum criteria for the development and implementation of State, local, and regional contingency plans by State and local governments in consultation with private interests to insure timely, efficient, coordinated and effective action to minimize damage resulting from oil discharges. Such plans will be directed toward the protection of the public health or welfare of the United States, including, but not limited to, fish, shellfish, wildlife, and public and private property, shorelines, and beaches. The development and implementation of such plans shall be consistent with the National Oil and Hazardous Materials Pollution Contingency Plan. State, local and regional oil removal contingency plans shall provide for the coordination of the total response to an oil discharge so that contingency organizations established thereunder can function independently, in conjunction with each other, or in conjunction with the National and Regional Response Teams established by the National Oil and Hazardous Materials Pollution Contingency Plan.

§109.4 Relationship to Federal response actions.

The National Oil and Hazardous Materials Pollution Contingency Plan provides that the Federal on-scene commander shall investigate all reported spills. If such investigation shows that appropriate action is being taken by either the discharger or non-Federal entities, the Federal on-scene commander shall monitor and provide advice or assistance, as required. If appropriate containment or cleanup action is not being taken by the discharger or non-Federal entities, the Federal on-scene commander will take control of the response activity in accordance with section 11(c)(1) of the Federal Act.

§ 109.5 Development and implementation criteria for State, local and regional oil removal contingency plans.

Criteria for the development and implementation of State, local and regional oil removal contingency plans are:

(a) Definition of the authorities, responsibilities and duties of all persons, organizations or agencies which are to be involved or could be involved in planning or directing oil removal operations, with particular care to clearly define the authorities, responsibilities and duties of State and local governmental agencies to avoid unnecessary duplication of contingency planning activities and to minimize the potential for conflict and confusion that could be generated in an emergency situation as a result of such duplications.

(b) Establishment of notification procedures for the purpose of early detection and timely notification of an oil discharge including:

(1) The identification of critical water use areas to facilitate the reporting of and response to oil discharges.

(2) A current list of names, telephone numbers and addresses of the responsible persons and alternates on call to receive notification of an oil discharge as well as the names, telephone numbers and addresses of the organizations and agencies to be notified when an oil discharge is discovered.

(3) Provisions for access to a reliable communications system for timely notification of an oil discharge and incorporation in the communications system of the capability for interconnection with the communications systems established under related oil removal contingency plans, particularly State and National plans.

(4) An established, prearranged procedure for requesting assistance during a major disaster or when the situation exceeds the response capability of the State, local or regional authority.

(c) Provisions to assure that full resource capability is known and can be committed during an oil discharge situation including:

(1) The identification and inventory of applicable equipment, materials and supplies which are available locally and regionally.

(2) An estimate of the equipment, materials and supplies which would be required to remove the maximum oil discharge to be anticipated.

(3) Development of agreements and arrangements in advance of an oil discharge for the acquisition of equipment, materials and supplies to be used in responding to such a discharge.

(d) Provisions for well defined and specific actions to be taken after discovery and notification of an oil discharge including:

(1) Specification of an oil discharge response operating team consisting of trained, prepared and available operating personnel.

(2) Predesignation of a properly qualified oil discharge response coordinator who is charged with the responsibility and delegated commensurate authority for directing and coordinating response operations and who knows how to request assistance from Federal authorities operating under existing national and regional contingency plans.

(3) A preplanned location for an oil discharge response operations center and a reliable communications system for directing the coordinated overall response operations.

(4) Provisions for varying degrees of response effort depending on the severity of the oil discharge.

(5) Specification of the order of priority in which the various water uses are to be protected where more than one water use may be adversely affected as a result of an oil discharge and where response operations may not be adequate to protect all uses.

(e) Specific and well defined procedures to facilitate recovery of damages and enforcement measures as provided for by State and local statutes and ordinances.

§ 109.6 Coordination.

For the purposes of coordination, the contingency plans of State and local governments should be developed and implemented in consultation with private interests. A copy of any oil removal contingency plan developed by State and local governments should be

forwarded to the Council on Environmental Quality upon request to facilitate the coordination of these contingency plans with the National Oil and Hazardous Materials Pollution Contingency Plan.

PART 110—DISCHARGE OF OIL

Sec.
110.1 Definitions.
110.2 Applicability.
110.3 Discharge of oil in such quantities as ''may be harmful'' pursuant to section 311(b)(4) of the Act.
110.4 Dispersants.
110.5 Discharges of oil not determined ''as may be harmful'' pursuant to section 311(b)(3) of the Act.
110.6 Notice.

AUTHORITY: 33 U.S.C. 1321(b)(3) and (b)(4) and 1361(a); E.O. 11735, 38 FR 21243, 3 CFR Parts 1971–1975 Comp., p. 793.

SOURCE: 52 FR 10719, Apr. 2, 1987, unless otherwise noted.

§ 110.1 Definitions.

Terms not defined in this section have the same meaning given by the Section 311 of the Act. As used in this part, the following terms shall have the meaning indicated below:

Act means the Federal Water Pollution Control Act, as amended, 33 U.S.C. 1251 *et seq.*, also known as the Clean Water Act;

Administrator means the Administrator of the Environmental Protection Agency (EPA);

Applicable water quality standards means State water quality standards adopted by the State pursuant to section 303 of the Act or promulgated by EPA pursuant to that section;

MARPOL 73/78 means the International Convention for the Prevention of Pollution from Ships, 1973, as modified by the Protocol of 1978 relating thereto, Annex I, which regulates pollution from oil and which entered into force on October 2, 1983;

Navigable waters means the waters of the United States, including the territorial seas. The term includes:

(a) All waters that are currently used, were used in the past, or may be susceptible to use in interstate or foreign commerce, including all waters that are subject to the ebb and flow of the tide;

(b) Interstate waters, including interstate wetlands;

(c) All other waters such as intrastate lakes, rivers, streams (including intermittent streams), mudflats, sandflats, and wetlands, the use, degradation, or destruction of which would affect or could affect interstate or foreign commerce including any such waters:

(1) That are or could be used by interstate or foreign travelers for recreational or other purposes;

(2) From which fish or shellfish are or could be taken and sold in interstate or foreign commerce;

(3) That are used or could be used for industrial purposes by industries in interstate commerce;

(d) All impoundments of waters otherwise defined as navigable waters under this section;

(e) Tributaries of waters identified in paragraphs (a) through (d) of this section, including adjacent wetlands; and

(f) Wetlands adjacent to waters identified in paragraphs (a) through (e) of this section: Provided, That waste treatment systems (other than cooling ponds meeting the criteria of this paragraph) are not waters of the United States;

Navigable waters do not include prior converted cropland. Notwithstanding the determination of an area's status as prior converted cropland by any other federal agency, for the purposes of the Clean Water Act, the final authority regarding Clean Water Act jurisdiction remains with EPA.

NPDES means National Pollutant Discharge Elimination System;

Sheen means an iridescent appearance on the surface of water;

Sludge means an aggregate of oil or oil and other matter of any kind in any form other than dredged spoil having a combined specific gravity equivalent to or greater than water;

United States means the States, the District of Columbia, the Commonwealth of Puerto Rico, Guam, American Samoa, the Virgin Islands, and the Trust Territory of the Pacific Islands;

Wetlands means those areas that are inundated or saturated by surface or ground water at a frequency or duration sufficient to support, and that

under normal circumstances do support, a prevalence of vegetation typically adapted for life in saturated soil conditions. Wetlands generally include playa lakes, swamps, marshes, bogs and similar areas such as sloughs, prairie potholes, wet meadows, prairie river overflows, mudflats, and natural ponds.

[52 FR 10719, Apr. 2, 1987, as amended at 58 FR 45039, Aug. 25, 1993; 61 FR 7421, Feb. 28, 1996]

§ 110.2 Applicability.

The regulations of this part apply to the discharge of oil prohibited by section 311(b)(3) of the Act.

[61 FR 7421, Feb. 28, 1996]

§ 110.3 Discharge of oil in such quantities as "may be harmful" pursuant to section 311(b)(4) of the Act.

For purposes of section 311(b)(4) of the Act, discharges of oil in such quantities that the Administrator has determined may be harmful to the public health or welfare or the environment of the United States include discharges of oil that:

(a) Violate applicable water quality standards; or

(b) Cause a film or sheen upon or discoloration of the surface of the water or adjoining shorelines or cause a sludge or emulsion to be deposited beneath the surface of the water or upon adjoining shorelines.

[61 FR 7421, Feb. 28, 1996]

§ 110.4 Dispersants.

Addition of dispersants or emulsifiers to oil to be discharged that would circumvent the provisions of this part is prohibited.

[52 FR 10719, Apr. 2, 1987. Redesignated at 61 FR 7421, Feb. 28, 1996]

§ 110.5 Discharges of oil not determined "as may be harmful" pursuant to Section 311(b)(3) of the Act.

Notwithstanding any other provisions of this part, the Administrator has not determined the following discharges of oil ''as may be harmful'' for purposes of section 311(b) of the Act:

(a) Discharges of oil from a properly functioning vessel engine (including an engine on a public vessel) and any discharges of such oil accumulated in the bilges of a vessel discharged in compliance with MARPOL 73/78, Annex I, as provided in 33 CFR part 151, subpart A;

(b) Other discharges of oil permitted under MARPOL 73/78, Annex I, as provided in 33 CFR part 151, subpart A; and

(c) Any discharge of oil explicitly permitted by the Administrator in connection with research, demonstration projects, or studies relating to the prevention, control, or abatement of oil pollution.

[61 FR 7421, Feb. 28, 1996]

§ 110.6 Notice.

Any person in charge of a vessel or of an onshore or offshore facility shall, as soon as he or she has knowledge of any discharge of oil from such vessel or facility in violation of section 311(b)(3) of the Act, immediately notify the National Response Center (NRC) (800–424–8802; in the Washington, DC metropolitan area, 202–426–2675). If direct reporting to the NRC is not practicable, reports may be made to the Coast Guard or EPA predesignated On-Scene Coordinator (OSC) for the geographic area where the discharge occurs. All such reports shall be promptly relayed to the NRC. If it is not possible to notify the NRC or the predesignated OCS immediately, reports may be made immediately to the nearest Coast Guard unit, provided that the person in charge of the vessel or onshore or offshore facility notifies the NRC as soon as possible. The reports shall be made in accordance with such procedures as the Secretary of Transportation may prescribe. The procedures for such notice are set forth in U.S. Coast Guard regulations, 33 CFR part 153, subpart B and in the National Oil and Hazardous Substances Pollution Contingency Plan, 40 CFR part 300, subpart E.

(Approved by the Office of Management and Budget under the control number 2050–0046)

[52 FR 10719, Apr. 2, 1987. Redesignated and amended at 61 FR 7421, Feb. 28, 1996; 61 FR 14032, Mar. 29, 1996]

PART 112—OIL POLLUTION PREVENTION

Sec.

112.1 General applicability.

112.2 Definitions.
112.3 Requirements for preparation and implementation of Spill Prevention Control and Countermeasure Plans.
112.4 Amendment of SPCC Plans by Regional Administrator.
112.5 Amendment of Spill Prevention Control and Countermeasure Plans by owners or operators.
112.7 Guidelines for the preparation and implementation of a Spill Prevention Control and Countermeasure Plan.
112.20 Facility response plans.
112.21 Facility response training and drills/exercises.

APPENDIX A TO PART 112—MEMORANDUM OF UNDERSTANDING BETWEEN THE SECRETARY OF TRANSPORTATION AND THE ADMINISTRATOR OF THE ENVIRONMENTAL PROTECTION AGENCY
APPENDIX B TO PART 112—MEMORANDUM OF UNDERSTANDING AMONG THE SECRETARY OF THE INTERIOR, SECRETARY OF TRANSPORTATION, AND ADMINISTRATOR OF THE ENVIRONMENTAL PROTECTION AGENCY
APPENDIX C TO PART 112—SUBSTANTIAL HARM CRITERIA
APPENDIX D TO PART 112—DETERMINATION OF A WORST CASE DISCHARGE PLANNING VOLUME
APPENDIX E TO PART 112—DETERMINATION AND EVALUATION OF REQUIRED RESPONSE RESOURCES FOR FACILITY RESPONSE PLANS
APPENDIX F TO PART 112—FACILITY–SPECIFIC RESPONSE PLAN

AUTHORITY: 33 U.S.C. 1321 and 1361; E.O. 12777 (October 18, 1991), 3 CFR, 1991 Comp., p. 351.

SOURCE: 38 FR 34165, Dec. 11, 1973, unless otherwise noted.

§112.1 General applicability.

(a) This part establishes procedures, methods and equipment and other requirements for equipment to prevent the discharge of oil from non-transportation-related onshore and offshore facilities into or upon the navigable waters of the United States or adjoining shorelines.

(b) Except as provided in paragraph (d) of this section, this part applies to owners or operators of non-transportation-related onshore and offshore facilities engaged in drilling, producing, gathering, storing, processing, refining, transferring, distributing or consuming oil and oil products, and which, due to their location, could reasonably be expected to discharge oil in harmful quantities, as defined in part 110 of this chapter, into or upon the navigable waters of the United States or adjoining shorelines.

(c) As provided in section 313 (86 Stat. 875) departments, agencies, and instrumentalities of the Federal government are subject to these regulations to the same extent as any person, except for the provisions of §112.6.

(d) This part does not apply to:

(1) Facilities, equipment or operations which are not subject to the jurisdiction of the Environmental Protection Agency, as follows:

(i) Onshore and offshore facilities, which, due to their location, could not reasonably be expected to discharge oil into or upon the navigable waters of the United States or adjoining shorelines. This determination shall be based solely upon a consideration of the geographical, locational aspects of the facility (such as proximity to navigable waters or adjoining shorelines, land contour, drainage, etc.) and shall exclude consideration of manmade features such as dikes, equipment or other structures which may serve to restrain, hinder, contain, or otherwise prevent a discharge of oil from reaching navigable waters of the United States or adjoining shorelines; and

(ii) Equipment or operations of vessels or transportation-related onshore and offshore facilities which are subject to authority and control of the Department of Transportation, as defined in the Memorandum of Understanding between the Secretary of Transportation and the Administrator of the Environmental Protection Agency, dated November 24, 1971, 36 FR 24000.

(2) Those facilities which, although otherwise subject to the jurisdiction of the Environmental Protection Agency, meet both of the following requirements:

(i) The underground buried storage capacity of the facility is 42,000 gallons or less of oil, and

(ii) The storage capacity, which is not buried, of the facility is 1,320 gallons or less of oil, provided no single container has a capacity in excess of 660 gallons.

(e) This part provides for the preparation and implementation of Spill Prevention Control and Countermeasure Plans prepared in accordance with

§ 112.7, designed to complement existing laws, regulations, rules, standards, policies and procedures pertaining to safety standards, fire prevention and pollution prevention rules, so as to form a comprehensive balanced Federal/State spill prevention program to minimize the potential for oil discharges. Compliance with this part does not in any way relieve the owner or operator of an onshore or an offshore facility from compliance with other Federal, State or local laws.

[38 FR 34165, Dec. 11, 1973, as amended at 41 FR 12657, Mar. 26, 1976]

§ 112.2 Definitions.

For the purposes of this part:

Adverse weather means the weather conditions that make it difficult for response equipment and personnel to cleanup or remove spilled oil, and that will be considered when identifying response systems and equipment in a response plan for the applicable operating environment. Factors to consider include significant wave height as specified in Appendix E to this part, as appropriate, ice conditions, temperatures, weather-related visibility, and currents within the area in which the systems or equipment are intended to function.

Complex means a facility possessing a combination of transportation-related and non-transportation-related components that is subject to the jurisdiction of more than one Federal agency under section 311(j) of the Clean Water Act.

Contract or other approved means: (1) A written contractual agreement with an oil spill removal organization(s) that identifies and ensures the availability of the necessary personnel and equipment within appropriate response times; and/or

(2) A written certification by the owner or operator that the necessary personnel and equipment resources, owned or operated by the facility owner or operator, are available to respond to a discharge within appropriate response times; and/or

(3) Active membership in a local or regional oil spill removal organization(s) that has identified and ensures adequate access through such membership to necessary personnel and equipment to respond to a discharge within appropriate response times in the specified geographic areas; and/or

(4) Other specific arrangements approved by the Regional Administrator upon request of the owner or operator.

Discharge includes but is not limited to, any spilling, leaking, pumping, pouring, emitting, emptying or dumping. For purposes of this part, the term *discharge* shall not include any discharge of oil which is authorized by a permit issued pursuant to section 13 of the River and Harbor Act of 1899 (30 Stat. 1121, 33 U.S.C. 407), or sections 402 or 405 of the FWPCA Amendments of 1972 (86 Stat. 816 *et seq.*, 33 U.S.C. 1251 *et seq.*).

Fish and wildlife and sensitive environments means areas that may be identified by either their legal designation or by evaluations of Area Committees (for planning) or members of the Federal On-Scene Coordinator's spill response structure (during responses). These areas may include wetlands, National and State parks, critical habitats for endangered/threatened species, wilderness and natural resource areas, marine sanctuaries and estuarine reserves, conservation areas, preserves, wildlife areas, wildlife refuges, wild and scenic rivers, recreational areas, national forests, Federal and State lands that are research national areas, heritage program areas, land trust areas, and historical and archeological sites and parks. These areas may also include unique habitats such as: aquaculture sites and agricultural surface water intakes, bird nesting areas, critical biological resource areas, designated migratory routes, and designated seasonal habitats.

Injury means a measurable adverse change, either long- or short-term, in the chemical or physical quality or the viability of a natural resource resulting either directly or indirectly from exposure to a discharge of oil, or exposure to a product of reactions resulting from a discharge of oil.

Maximum extent practicable means the limitations used to determine oil spill planning resources and response times for on-water recovery, shoreline protection, and cleanup for worst case discharges from onshore non- transportation-related facilities in adverse

weather. It considers the planned capability to respond to a worst case discharge in adverse weather, as contained in a response plan that meets the requirements in §112.20 or in a specific plan approved by the Regional Administrator.

The term *navigable waters* of the United States means *navigable waters* as defined in section 502(7) of the FWPCA, and includes:

(1) All navigable waters of the United States, as defined in judicial decisions prior to passage of the 1972 Amendments to the FWPCA (Pub. L. 92–500), and tributaries of such waters;

(2) Interstate waters;

(3) Intrastate lakes, rivers, and streams which are utilized by interstate travelers for recreational or other purposes; and

(4) Intrastate lakes, rivers, and streams from which fish or shellfish are taken and sold in interstate commerce.

Navigable waters do not include prior converted cropland. Notwithstanding the determination of an area's status as prior converted cropland by any other federal agency, for the purposes of the Clean Water Act, the final authority regarding Clean Water Act jurisdiction remains with EPA.

Offshore facility means any facility of any kind located in, on, or under any of the navigable waters of the United States, which is not a transportation-related facility.

Oil means oil of any kind or in any form, including, but not limited to petroleum, fuel oil, sludge, oil refuse and oil mixed with wastes other than dredged spoil.

Oil Spill Removal Organization means an entity that provides oil spill response resources, and includes any for-profit or not-for-profit contractor, cooperative, or in-house response resources that have been established in a geographic area to provide required response resources.

Onshore facility means any facility of any kind located in, on, or under any land within the United States, other than submerged lands, which is not a transportation-related facility.

Owner or operator means any person owning or operating an onshore facility or an offshore facility, and in the case of any abandoned offshore facility, the person who owned or operated such facility immediately prior to such abandonment.

Person includes an individual, firm, corporation, association, and a partnership.

Regional Administrator, means the Regional Administrator of the Environmental Protection Agency, or his designee, in and for the Region in which the facility is located.

Spill event means a discharge of oil into or upon the navigable waters of the United States or adjoining shorelines in harmful quantities, as defined at 40 CFR part 110.

Transportation-related and *non-transportation-related* as applied to an onshore or offshore facility, are defined in the Memorandum of Understanding between the Secretary of Transportation and the Administrator of the Environmental Protection Agency, dated November 24, 1971, 36 FR 24080.

United States means the States, the District of Columbia, the Commonwealth of Puerto Rico, the Canal Zone, Guam, American Samoa, the Virgin Islands, and the Trust Territory of the Pacific Islands.

Vessel means every description of watercraft or other artificial contrivance used, or capable of being used as a means of transportation on water, other than a public vessel.

Worst case discharge for an onshore non-transportation-related facility means the largest foreseeable discharge in adverse weather conditions as determined using the worksheets in Appendix D to this part.

[38 FR 34165, Dec. 11, 1973, as amended at 58 FR 45039, Aug. 25, 1993; 59 FR 34097, July 1, 1994]

§112.3 Requirements for preparation and implementation of Spill Prevention Control and Countermeasure Plans.

(a) Owners or operators of onshore and offshore facilities in operation on or before the effective date of this part that have discharged or, due to their location, could reasonably be expected to discharge oil in harmful quantities, as defined in 40 CFR part 110, into or upon the navigable waters of the United States or adjoining shorelines, shall

prepare a Spill Prevention Control and Countermeasure Plan (hereinafter ''SPCC Plan''), in writing and in accordance with §112.7. Except as provided for in paragraph (f) of this section, such SPCC Plan shall be prepared within six months after the effective date of this part and shall be fully implemented as soon as possible, but not later than one year after the effective date of this part.

(b) Owners or operators of onshore and offshore facilities that become operational after the effective date of this part, and that have discharged or could reasonably be expected to discharge oil in harmful quantities, as defined in 40 CFR part 110, into or upon the navigable waters of the United States or adjoining shorelines, shall prepare an SPCC Plan in accordance with §112.7. Except as provided for in paragraph (f) of this section, such SPCC Plan shall be prepared within six months after the date such facility begins operations and shall be fully implemented as soon as possible, but not later than one year after such facility begins operations.

(c) Owners or operators of onshore and offshore mobile or portable facilities, such as onshore drilling or workover rigs, barge mounted offshore drilling or workover rigs, and portable fueling facilities shall prepare and implement an SPCC Plan as required by paragraphs (a), (b) and (d) of this section. The owners or operators of such facility need not prepare a new SPCC Plan each time the facility is moved to a new site. The SPCC Plan may be a general plan, prepared in accordance with §112.7, using good engineering practice. When the mobile or portable facility is moved, it must be located and installed using the spill prevention practices outlined in the SPCC Plan for the facility. No mobile or portable facility subject to this regulation shall operate unless the SPCC Plan has been implemented. The SPCC Plan shall only apply while the facility is in a fixed (non-transportation) operating mode.

(d) No SPCC Plan shall be effective to satisfy the requirements of this part unless it has been reviewed by a Registered Professional Engineer and certified to by such Professional Engineer. By means of this certification the engineer, having examined the facility and being familiar with the provisions of this part, shall attest that the SPCC Plan has been prepared in accordance with good engineering practices. Such certification shall in no way relieve the owner or operator of an onshore or offshore facility of his duty to prepare and fully implement such Plan in accordance with §112.7, as required by paragraphs (a), (b) and (c) of this section.

(e) Owners or operators of a facility for which an SPCC Plan is required pursuant to paragraph (a), (b) or (c) of this section shall maintain a complete copy of the Plan at such facility if the facility is normally attended at least 8 hours per day, or at the nearest field office if the facility is not so attended, and shall make such Plan available to the Regional Administrator for on-site review during normal working hours.

(f) *Extensions of time.* (1) The Regional Administrator may authorize an extension of time for the preparation and full implementation of an SPCC Plan beyond the time permitted for the preparation and implementation of an SPCC Plan pursuant to paragraph (a), (b) or (c) of this section where he finds that the owner or operator of a facility subject to paragraphs (a), (b) or (c) of this section cannot fully comply with the requirements of this part as a result of either nonavailability of qualified personnel, or delays in construction or equipment delivery beyond the control and without the fault of such owner or operator or their respective agents or employees.

(2) Any owner or operator seeking an extension of time pursuant to paragraph (f)(1) of this section may submit a letter of request to the Regional Administrator. Such letter shall include:

(i) A complete copy of the SPCC Plan, if completed;

(ii) A full explanation of the cause for any such delay and the specific aspects of the SPCC Plan affected by the delay;

(iii) A full discussion of actions being taken or contemplated to minimize or mitigate such delay;

(iv) A proposed time schedule for the implementation of any corrective actions being taken or contemplated, including interim dates for completion of

tests or studies, installation and operation of any necessary equipment or other preventive measures.

In addition, such owner or operator may present additional oral or written statements in support of his letter of request.

(3) The submission of a letter of request for extension of time pursuant to paragraph (f)(2) of this section shall in no way relieve the owner or operator from his obligation to comply with the requirements of §112.3 (a), (b) or (c). Where an extension of time is authorized by the Regional Administrator for particular equipment or other specific aspects of the SPCC Plan, such extension shall in no way affect the owner's or operator's obligation to comply with the requirements of §112.3 (a), (b) or (c) with respect to other equipment or other specific aspects of the SPCC Plan for which an extension of time has not been expressly authorized.

[38 FR 34165, Dec. 11, 1973, as amended at 41 FR 12657, Mar. 26, 1976]

§112.4 Amendment of SPCC Plans by Regional Administrator.

(a) Notwithstanding compliance with §112.3, whenever a facility subject to §112.3 (a), (b) or (c) has: Discharged more than 1,000 U.S. gallons of oil into or upon the navigable waters of the United States or adjoining shorelines in a single spill event, or discharged oil in harmful quantities, as defined in 40 CFR part 110, into or upon the navigable waters of the United States or adjoining shorelines in two spill events, reportable under section 311(b)(5) of the FWPCA, occurring within any twelve month period, the owner or operator of such facility shall submit to the Regional Administrator, within 60 days from the time such facility becomes subject to this section, the following:

(1) Name of the facility;

(2) Name(s) of the owner or operator of the facility;

(3) Location of the facility;

(4) Date and year of initial facility operation;

(5) Maximum storage or handling capacity of the facility and normal daily throughput;

(6) Description of the facility, including maps, flow diagrams, and topographical maps;

(7) A complete copy of the SPCC Plan with any amendments;

(8) The cause(s) of such spill, including a failure analysis of system or subsystem in which the failure occurred;

(9) The corrective actions and/or countermeasures taken, including an adequate description of equipment repairs and/or replacements;

(10) Additional preventive measures taken or contemplated to minimize the possibility of recurrence;

(11) Such other information as the Regional Administrator may reasonably require pertinent to the Plan or spill event.

(b) Section 112.4 shall not apply until the expiration of the time permitted for the preparation and implementation of an SPCC Plan pursuant to §112.3 (a), (b), (c) and (f).

(c) A complete copy of all information provided to the Regional Administrator pursuant to paragraph (a) of this section shall be sent at the same time to the State agency in charge of water pollution control activities in and for the State in which the facility is located. Upon receipt of such information such State agency may conduct a review and make recommendations to the Regional Administrator as to further procedures, methods, equipment and other requirements for equipment necessary to prevent and to contain discharges of oil from such facility.

(d) After review of the SPCC Plan for a facility subject to paragraph (a) of this section, together with all other information submitted by the owner or operator of such facility, and by the State agency under paragraph (c) of this section, the Regional Administrator may require the owner or operator of such facility to amend the SPCC Plan if he finds that the Plan does not meet the requirements of this part or that the amendment of the Plan is necessary to prevent and to contain discharges of oil from such facility.

(e) When the Regional Administrator proposes to require an amendment to the SPCC Plan, he shall notify the facility operator by certified mail addressed to, or by personal delivery to, the facility owner or operator, that he

proposes to require an amendment to the Plan, and shall specify the terms of such amendment. If the facility owner or operator is a corporation, a copy of such notice shall also be mailed to the registered agent, if any, of such corporation in the State where such facility is located. Within 30 days from receipt of such notice, the facility owner or operator may submit written information, views, and arguments on the amendment. After considering all relevant material presented, the Regional Administrator shall notify the facility owner or operator of any amendment required or shall rescind the notice. The amendment required by the Regional Administrator shall become part of the Plan 30 days after such notice, unless the Regional Administrator, for good cause, shall specify another effective date. The owner or operator of the facility shall implement the amendment of the Plan as soon as possible, but not later than six months after the amendment becomes part of the Plan, unless the Regional Administrator specifies another date.

(f) An owner or operator may appeal a decision made by the Regional Administrator requiring an amendment to an SPCC Plan. The appeal shall be made to the Administrator of the United States Environmental Protection Agency and must be made in writing within 30 days of receipt of the notice from the Regional Administrator requiring the amendment. A complete copy of the appeal must be sent to the Regional Administrator at the time the appeal is made. The appeal shall contain a clear and concise statement of the issues and points of fact in the case. It may also contain additional information from the owner or operator, or from any other person. The Administrator or his designee may request additional information from the owner or operator, or from any other person. The Administrator or his designee shall render a decision within 60 days of receiving the appeal and shall notify the owner or operator of his decision.

[38 FR 34165, Dec. 11, 1973, as amended at 41 FR 12658, Mar. 26, 1976]

§ 112.5 Amendment of Spill Prevention Control and Countermeasure Plans by owners or operators.

(a) Owners or operators of facilities subject to § 112.3 (a), (b) or (c) shall amend the SPCC Plan for such facility in accordance with § 112.7 whenever there is a change in facility design, construction, operation or maintenance which materially affects the facility's potential for the discharge of oil into or upon the navigable waters of the United States or adjoining shore lines. Such amendments shall be fully implemented as soon as possible, but not later than six months after such change occurs.

(b) Notwithstanding compliance with paragraph (a) of this section, owners and operators of facilities subject to § 112.3 (a), (b) or (c) shall complete a review and evaluation of the SPCC Plan at least once every three years from the date such facility becomes subject to this part. As a result of this review and evaluation, the owner or operator shall amend the SPCC Plan within six months of the review to include more effective prevention and control technology if: (1) Such technology will significantly reduce the likelihood of a spill event from the facility, and (2) if such technology has been field-proven at the time of the review.

(c) No amendment to an SPCC Plan shall be effective to satisfy the requirements of this section unless it has been certified by a Professional Engineer in accordance with § 112.3(d).

§ 112.7 Guidelines for the preparation and implementation of a Spill Prevention Control and Countermeasure Plan.

The SPCC Plan shall be a carefully thought-out plan, prepared in accordance with good engineering practices, and which has the full approval of management at a level with authority to commit the necessary resources. If the plan calls for additional facilities or procedures, methods, or equipment not yet fully operational, these items should be discussed in separate paragraphs, and the details of installation and operational start-up should be explained separately. The complete SPCC Plan shall follow the sequence outlined

below, and include a discussion of the facility's conformance with the appropriate guidelines listed:

(a) A facility which has experienced one or more spill events within twelve months prior to the effective date of this part should include a written description of each such spill, corrective action taken and plans for preventing recurrence.

(b) Where experience indicates a reasonable potential for equipment failure (such as tank overflow, rupture, or leakage), the plan should include a prediction of the direction, rate of flow, and total quantity of oil which could be discharged from the facility as a result of each major type of failure.

(c) Appropriate containment and/or diversionary structures or equipment to prevent discharged oil from reaching a navigable water course should be provided. One of the following preventive systems or its equivalent should be used as a minimum:

(1) Onshore facilities:

(i) Dikes, berms or retaining walls sufficiently impervious to contain spilled oil;

(ii) Curbing;

(iii) Culverting, gutters or other drainage systems;

(iv) Weirs, booms or other barriers;

(v) Spill diversion ponds;

(vi) Retention ponds;

(vii) Sorbent materials.

(2) Offshore facilities:

(i) Curbing, drip pans;

(ii) Sumps and collection systems.

(d) When it is determined that the installation of structures or equipment listed in § 112.7(c) to prevent discharged oil from reaching the navigable waters is not practicable from any onshore or offshore facility, the owner or operator should clearly demonstrate such impracticability and provide the following:

(1) A strong oil spill contingency plan following the provision of 40 CFR part 109.

(2) A written commitment of manpower, equipment and materials required to expeditiously control and remove any harmful quantity of oil discharged.

(e) In addition to the minimal prevention standards listed under § 112.7(c), sections of the Plan should include a complete discussion of conformance with the following applicable guidelines, other effective spill prevention and containment procedures (or, if more stringent, with State rules, regulations and guidelines):

(1) *Facility drainage* (*onshore*); (*excluding production facilities*). (i) Drainage from diked storage areas should be restrained by valves or other positive means to prevent a spill or other excessive leakage of oil into the drainage system or inplant effluent treatment system, except where plan systems are designed to handle such leakage. Diked areas may be emptied by pumps or ejectors; however, these should be manually activated and the condition of the accumulation should be examined before starting to be sure no oil will be discharged into the water.

(ii) Flapper-type drain valves should not be used to drain diked areas. Valves used for the drainage of diked areas should, as far as practical, be of manual, open-and-closed design. When plant drainage drains directly into water courses and not into wastewater treatment plants, retained storm water should be inspected as provided in paragraphs (e)(2)(iii) (B), (C) and (D) of this section before drainage.

(iii) Plant drainage systems from undiked areas should, if possible, flow into ponds, lagoons or catchment basins, designed to retain oil or return it to the facility. Catchment basins should not be located in areas subject to periodic flooding.

(iv) If plant drainage is not engineered as above, the final discharge of all in-plant ditches should be equipped with a diversion system that could, in the event of an uncontrolled spill, return the oil to the plant.

(v) Where drainage waters are treated in more than one treatment unit, natural hydraulic flow should be used. If pump transfer is needed, two ''lift'' pumps should be provided, and at least one of the pumps should be permanently installed when such treatment is continuous. In any event, whatever techniques are used facility drainage systems should be adequately engineered to prevent oil from reaching navigable waters in the event of equipment failure or human error at the facility.

(2) *Bulk storage tanks* (*onshore*); (*excluding production facilities*). (i) No tank should be used for the storage of oil unless its material and construction are compatible with the material stored and conditions of storage such as pressure and temperature, etc.

(ii) All bulk storage tank installations should be constructed so that a secondary means of containment is provided for the entire contents of the largest single tank plus sufficient freeboard to allow for precipitation. Diked areas should be sufficiently impervious to contain spilled oil. Dikes, containment curbs, and pits are commonly employed for this purpose, but they may not always be appropriate. An alternative system could consist of a complete drainage trench enclosure arranged so that a spill could terminate and be safely confined in an in-plant catchment basin or holding pond.

(iii) Drainage of rainwater from the diked area into a storm drain or an effluent discharge that empties into an open water course, lake, or pond, and bypassing the in-plant treatment system may be acceptable if:

(A) The bypass valve is normally sealed closed.

(B) Inspection of the run-off rain water ensures compliance with applicable water quality standards and will not cause a harmful discharge as defined in 40 CFR part 110.

(C) The bypass valve is opened, and resealed following drainage under responsible supervision.

(D) Adequate records are kept of such events.

(iv) Buried metallic storage tanks represent a potential for undetected spills. A new buried installation should be protected from corrosion by coatings, cathodic protection or other effective methods compatible with local soil conditions. Such buried tanks should at least be subjected to regular pressure testing.

(v) Partially buried metallic tanks for the storage of oil should be avoided, unless the buried section of the shell is adequately coated, since partial burial in damp earth can cause rapid corrosion of metallic surfaces, especially at the earth/air interface.

(vi) Aboveground tanks should be subject to periodic integrity testing, taking into account tank design (floating roof, etc.) and using such techniques as hydrostatic testing, visual inspection or a system of non-destructive shell thickness testing. Comparison records should be kept where appropriate, and tank supports and foundations should be included in these inspections. In addition, the outside of the tank should frequently be observed by operating personnel for signs of deterioration, leaks which might cause a spill, or accumulation of oil inside diked areas.

(vii) To control leakage through defective internal heating coils, the following factors should be considered and applied, as appropriate.

(A) The steam return or exhaust lines from internal heating coils which discharge into an open water course should be monitored for contamination, or passed through a settling tank, skimmer, or other separation or retention system.

(B) The feasibility of installing an external heating system should also be considered.

(viii) New and old tank installations should, as far as practical, be fail-safe engineered or updated into a fail-safe engineered installation to avoid spills. Consideration should be given to providing one or more of the following devices:

(A) High liquid level alarms with an audible or visual signal at a constantly manned operation or surveillance station; in smaller plants an audible air vent may suffice.

(B) Considering size and complexity of the facility, high liquid level pump cutoff devices set to stop flow at a predetermined tank content level.

(C) Direct audible or code signal communication between the tank gauger and the pumping station.

(D) A fast response system for determining the liquid level of each bulk storage tank such as digital computers, telepulse, or direct vision gauges or their equivalent.

(E) Liquid level sensing devices should be regularly tested to insure proper operation.

(ix) Plant effluents which are discharged into navigable waters should

have disposal facilities observed frequently enough to detect possible system upsets that could cause an oil spill event.

(x) Visible oil leaks which result in a loss of oil from tank seams, gaskets, rivets and bolts sufficiently large to cause the accumulation of oil in diked areas should be promptly corrected.

(xi) Mobile or portable oil storage tanks (onshore) should be positioned or located so as to prevent spilled oil from reaching navigable waters. A secondary means of containment, such as dikes or catchment basins, should be furnished for the largest single compartment or tank. These facilities should be located where they will not be subject to periodic flooding or washout.

(3) *Facility transfer operations, pumping, and in-plant process* (*onshore*)*;* (*excluding production facilities*). (i) Buried piping installations should have a protective wrapping and coating and should be cathodically protected if soil conditions warrant. If a section of buried line is exposed for any reason, it should be carefully examined for deterioration. If corrosion damage is found, additional examination and corrective action should be taken as indicated by the magnitude of the damage. An alternative would be the more frequent use of exposed pipe corridors or galleries.

(ii) When a pipeline is not in service, or in standby service for an extended time the terminal connection at the transfer point should be capped or blank-flanged, and marked as to origin.

(iii) Pipe supports should be properly designed to minimize abrasion and corrosion and allow for expansion and contraction.

(iv) All aboveground valves and pipelines should be subjected to regular examinations by operating personnel at which time the general condition of items, such as flange joints, expansion joints, valve glands and bodies, catch pans, pipeline supports, locking of valves, and metal surfaces should be assessed. In addition, periodic pressure testing may be warranted for piping in areas where facility drainage is such that a failure might lead to a spill event.

(v) Vehicular traffic granted entry into the facility should be warned verbally or by appropriate signs to be sure that the vehicle, because of its size, will not endanger above ground piping.

(4) *Facility tank car and tank truck loading/unloading rack* (*onshore*). (i) Tank car and tank truck loading/unloading procedures should meet the minimum requirements and regulation established by the Department of Transportation.

(ii) Where rack area drainage does not flow into a catchment basin or treatment facility designed to handle spills, a quick drainage system should be used for tank truck loading and unloading areas. The containment system should be designed to hold at least maximum capacity of any single compartment of a tank car or tank truck loaded or unloaded in the plant.

(iii) An interlocked warning light or physical barrier system, or warning signs, should be provided in loading/unloading areas to prevent vehicular departure before complete disconnect of flexible or fixed transfer lines.

(iv) Prior to filling and departure of any tank car or tank truck, the lowermost drain and all outlets of such vehicles should be closely examined for leakage, and if necessary, tightened, adjusted, or replaced to prevent liquid leakage while in transit.

(5) *Oil production facilities* (*onshore*)—(i) *Definition*. An onshore production facility may include all wells, flowlines, separation equipment, storage facilities, gathering lines, and auxiliary non-transportation-related equipment and facilities in a single geographical oil or gas field operated by a single operator.

(ii) *Oil production facility* (*onshore*) *drainage.* (A) At tank batteries and central treating stations where an accidental discharge of oil would have a reasonable possibility of reaching navigable waters, the dikes or equivalent required under § 112.7(c)(1) should have drains closed and sealed at all times except when rainwater is being drained. Prior to drainage, the diked area should be inspected as provided in paragraphs (e)(2)(iii) (B), (C), and (D) of this section. Accumulated oil on the rainwater should be picked up and returned to storage or disposed of in accordance with approved methods.

(B) Field drainage ditches, road ditches, and oil traps, sumps or skimmers, if such exist, should be inspected at regularly scheduled intervals for accumulation of oil that may have escaped from small leaks. Any such accumulations should be removed.

(iii) *Oil production facility* (*onshore*) *bulk storage tanks.* (A) No tank should be used for the storage of oil unless its material and construction are compatible with the material stored and the conditions of storage.

(B) All tank battery and central treating plant installations should be provided with a secondary means of containment for the entire contents of the largest single tank if feasible, or alternate systems such as those outlined in §112.7(c)(1). Drainage from undiked areas should be safely confined in a catchment basin or holding pond.

(C) All tanks containing oil should be visually examined by a competent person for condition and need for maintenance on a scheduled periodic basis. Such examination should include the foundation and supports of tanks that are above the surface of the ground.

(D) New and old tank battery installations should, as far as practical, be fail-safe engineered or updated into a fail-safe engineered installation to prevent spills. Consideration should be given to one or more of the following:

(*1*) Adequate tank capacity to assure that a tank will not overfill should a pumper/gauger be delayed in making his regular rounds.

(*2*) Overflow equalizing lines between tanks so that a full tank can overflow to an adjacent tank.

(*3*) Adequate vacuum protection to prevent tank collapse during a pipeline run.

(*4*) High level sensors to generate and transmit an alarm signal to the computer where facilities are a part of a computer production control system.

(iv) *Facility transfer operations, oil production facility* (*onshore*). (A) All above ground valves and pipelines should be examined periodically on a scheduled basis for general condition of items such as flange joints, valve glands and bodies, drip pans, pipeline supports, pumping well polish rod stuffing boxes, bleeder and gauge valves.

(B) Salt water (oil field brine) disposal facilities should be examined often, particularly following a sudden change in atmospheric temperature to detect possible system upsets that could cause an oil discharge.

(C) Production facilities should have a program of flowline maintenance to prevent spills from this source. The program should include periodic examinations, corrosion protection, flowline replacement, and adequate records, as appropriate, for the individual facility.

(6) *Oil drilling and workover facilities* (*onshore*). (i) Mobile drilling or workover equipment should be positioned or located so as to prevent spilled oil from reaching navigable waters.

(ii) Depending on the location, catchment basins or diversion structures may be necessary to intercept and contain spills of fuel, crude oil, or oily drilling fluids.

(iii) Before drilling below any casing string or during workover operations, a blowout prevention (BOP) assembly and well control system should be installed that is capable of controlling any well head pressure that is expected to be encountered while that BOP assembly is on the well. Casing and BOP installations should be in accordance with State regulatory agency requirements.

(7) *Oil drilling, production, or workover facilities* (*offshore*). (i) Definition: ''An oil drilling, production or workover facility (offshore)'' may include all drilling or workover equipment, wells, flowlines, gathering lines, platforms, and auxiliary nontransportation-related equipment and facilities in a single geographical oil or gas field operated by a single operator.

(ii) Oil drainage collection equipment should be used to prevent and control small oil spillage around pumps, glands, valves, flanges, expansion joints, hoses, drain lines, separators, treaters, tanks, and allied equipment. Drains on the facility should be controlled and directed toward a central collection sump or equivalent collection system sufficient to prevent discharges of oil into the navigable waters of the United States. Where drains and sumps are not practicable oil contained

in collection equipment should be removed as often as necessary to prevent overflow.

(iii) For facilities employing a sump system, sump and drains should be adequately sized and a spare pump or equivalent method should be available to remove liquid from the sump and assure that oil does not escape. A regular scheduled preventive maintenance inspection and testing program should be employed to assure reliable operation of the liquid removal system and pump start-up device. Redundant automatic sump pumps and control devices may be required on some installations.

(iv) In areas where separators and treaters are equipped with dump valves whose predominant mode of failure is in the closed position and pollution risk is high, the facility should be specially equipped to prevent the escape of oil. This could be accomplished by extending the flare line to a diked area if the separator is near shore, equipping it with a high liquid level sensor that will automatically shut-in wells producing to the separator, parallel redundant dump valves, or other feasible alternatives to prevent oil discharges.

(v) Atmospheric storage or surge tanks should be equipped with high liquid level sensing devices or other acceptable alternatives to prevent oil discharges.

(vi) Pressure tanks should be equipped with high and low pressure sensing devices to activate an alarm and/or control the flow or other acceptable alternatives to prevent oil discharges.

(vii) Tanks should be equipped with suitable corrosion protection.

(viii) A written procedure for inspecting and testing pollution prevention equipment and systems should be prepared and maintained at the facility. Such procedures should be included as part of the SPCC Plan.

(ix) Testing and inspection of the pollution prevention equipment and systems at the facility should be conducted by the owner or operator on a scheduled periodic basis commensurate with the complexity, conditions and circumstances of the facility or other appropriate regulations.

(x) Surface and subsurface well shut-in valves and devices in use at the facility should be sufficiently described to determine method of activation or control, e.g., pressure differential, change in fluid or flow conditions, combination of pressure and flow, manual or remote control mechanisms. Detailed records for each well, while not necessarily part of the plan should be kept by the owner or operator.

(xi) Before drilling below any casing string, and during workover operations a blowout preventer (BOP) assembly and well control system should be installed that is capable of controlling any well-head pressure that is expected to be encountered while that BOP assembly is on the well. Casing and BOP installations should be in accordance with State regulatory agency requirements.

(xii) Extraordinary well control measures should be provided should emergency conditions, including fire, loss of control and other abnormal conditions, occur. The degree of control system redundancy should vary with hazard exposure and probable consequences of failure. It is recommended that surface shut-in systems have redundant or ''fail close'' valving. Subsurface safety valves may not be needed in producing wells that will not flow but should be installed as required by applicable State regulations.

(xiii) In order that there will be no misunderstanding of joint and separate duties and obligations to perform work in a safe and pollution free manner, written instructions should be prepared by the owner or operator for contractors and subcontractors to follow whenever contract activities include servicing a well or systems appurtenant to a well or pressure vessel. Such instructions and procedures should be maintained at the offshore production facility. Under certain circumstances and conditions such contractor activities may require the presence at the facility of an authorized representative of the owner or operator who would intervene when necessary to prevent a spill event.

(xiv) All manifolds (headers) should be equipped with check valves on individual flowlines.

(xv) If the shut-in well pressure is greater than the working pressure of the flowline and manifold valves up to

and including the header valves associated with that individual flowline, the flowline should be equipped with a high pressure sensing device and shut-in valve at the wellhead unless provided with a pressure relief system to prevent over pressuring.

(xvi) All pipelines appurtenant to the facility should be protected from corrosion. Methods used, such as protective coatings or cathodic protection, should be discussed.

(xvii) Sub-marine pipelines appurtenant to the facility should be adequately protected against environmental stresses and other activities such as fishing operations.

(xviii) Sub-marine pipelines appurtenant to the facility should be in good operating condition at all times and inspected on a scheduled periodic basis for failures. Such inspections should be documented and maintained at the facility.

(8) *Inspections and records.* Inspections required by this part should be in accordance with written procedures developed for the facility by the owner or operator. These written procedures and a record of the inspections, signed by the appropriate supervisor or inspector, should be made part of the SPCC Plan and maintained for a period of three years.

(9) *Security* (*excluding oil production facilities*). (i) All plants handling, processing, and storing oil should be fully fenced, and entrance gates should be locked and/or guarded when the plant is not in production or is unattended.

(ii) The master flow and drain valves and any other valves that will permit direct outward flow of the tank's content to the surface should be securely locked in the closed position when in non-operating or non-standby status.

(iii) The starter control on all oil pumps should be locked in the ''off'' position or located at a site accessible only to authorized personnel when the pumps are in a non-operating or non-standby status.

(iv) The loading/unloading connections of oil pipelines should be securely capped or blank-flanged when not in service or standby service for an extended time. This security practice should also apply to pipelines that are emptied of liquid content either by draining or by inert gas pressure.

(v) Facility lighting should be commensurate with the type and location of the facility. Consideration should be given to: (A) Discovery of spills occurring during hours of darkness, both by operating personnel, if present, and by non-operating personnel (the general public, local police, etc.) and (B) prevention of spills occurring through acts of vandalism.

(10) *Personnel, training and spill prevention procedures.* (i) Owners or operators are responsible for properly instructing their personnel in the operation and maintenance of equipment to prevent the discharges of oil and applicable pollution control laws, rules and regulations.

(ii) Each applicable facility should have a designated person who is accountable for oil spill prevention and who reports to line management.

(iii) Owners or operators should schedule and conduct spill prevention briefings for their operating personnel at intervals frequent enough to assure adequate understanding of the SPCC Plan for that facility. Such briefings should highlight and describe known spill events or failures, malfunctioning components, and recently developed precautionary measures.

§ 112.20 Facility response plans.

(a) The owner or operator of any non-transportation-related onshore facility that, because of its location, could reasonably be expected to cause substantial harm to the environment by discharging oil into or on the navigable waters or adjoining shorelines shall prepare and submit a facility response plan to the Regional Administrator, according to the following provisions:

(1) For the owner or operator of a facility in operation on or before February 18, 1993 who is required to prepare and submit a response plan under 33 U.S.C. 1321(j)(5), the Oil Pollution Act of 1990 (Pub. L. 101–380, 33 U.S.C. 2701 *et seq.*) requires the submission of a response plan that satisfies the requirements of 33 U.S.C. 1321(j)(5) no later than February 18, 1993.

(i) The owner or operator of an existing facility that was in operation on or before February 18, 1993 who submitted

a response plan by February 18, 1993 shall revise the response plan to satisfy the requirements of this section and resubmit the response plan or updated portions of the response plan to the Regional Administrator by February 18, 1995.

(ii) The owner or operator of an existing facility in operation on or before February 18, 1993 who failed to submit a response plan by February 18, 1993 shall prepare and submit a response plan that satisfies the requirements of this section to the Regional Administrator before August 30, 1994.

(2) The owner or operator of a facility in operation on or after August 30, 1994 that satisfies the criteria in paragraph (f)(1) of this section or that is notified by the Regional Administrator pursuant to paragraph (b) of this section shall prepare and submit a facility response plan that satisfies the requirements of this section to the Regional Administrator.

(i) For a facility that commenced operations after February 18, 1993 but prior to August 30, 1994, and is required to prepare and submit a response plan based on the criteria in paragraph (f)(1) of this section, the owner or operator shall submit the response plan or updated portions of the response plan, along with a completed version of the response plan cover sheet contained in Appendix F to this part, to the Regional Administrator prior to August 30, 1994.

(ii) For a newly constructed facility that commences operation after August 30, 1994, and is required to prepare and submit a response plan based on the criteria in paragraph (f)(1) of this section, the owner or operator shall submit the response plan, along with a completed version of the response plan cover sheet contained in Appendix F to this part, to the Regional Administrator prior to the start of operations (adjustments to the response plan to reflect changes that occur at the facility during the start-up phase of operations must be submitted to the Regional Administrator after an operational trial period of 60 days).

(iii) For a facility required to prepare and submit a response plan after August 30, 1994, as a result of a planned change in design, construction, operation, or maintenance that renders the facility subject to the criteria in paragraph (f)(1) of this section, the owner or operator shall submit the response plan, along with a completed version of the response plan cover sheet contained in Appendix F to this part, to the Regional Administrator before the portion of the facility undergoing change commences operations (adjustments to the response plan to reflect changes that occur at the facility during the start-up phase of operations must be submitted to the Regional Administrator after an operational trial period of 60 days).

(iv) For a facility required to prepare and submit a response plan after August 30, 1994, as a result of an unplanned event or change in facility characteristics that renders the facility subject to the criteria in paragraph (f)(1) of this section, the owner or operator shall submit the response plan, along with a completed version of the response plan cover sheet contained in Appendix F to this part, to the Regional Administrator within six months of the unplanned event or change.

(3) In the event the owner or operator of a facility that is required to prepare and submit a response plan uses an alternative formula that is comparable to one contained in Appendix C to this part to evaluate the criterion in paragraph (f)(1)(ii)(B) or (f)(1)(ii)(C) of this section, the owner or operator shall attach documentation to the response plan cover sheet contained in Appendix F to this part that demonstrates the reliability and analytical soundness of the alternative formula.

(b)(1) The Regional Administrator may at any time require the owner or operator of any non-transportation-related onshore facility to prepare and submit a facility response plan under this section after considering the factors in paragraph (f)(2) of this section. If such a determination is made, the Regional Administrator shall notify the facility owner or operator in writing and shall provide a basis for the determination. If the Regional Administrator notifies the owner or operator in writing of the requirement to prepare and submit a response plan under this section, the owner or operator of the

facility shall submit the response plan to the Regional Administrator within six months of receipt of such written notification.

(2) The Regional Administrator shall review plans submitted by such facilities to determine whether the facility could, because of its location, reasonably be expected to cause significant and substantial harm to the environment by discharging oil into or on the navigable waters or adjoining shorelines.

(c) The Regional Administrator shall determine whether a facility could, because of its location, reasonably be expected to cause significant and substantial harm to the environment by discharging oil into or on the navigable waters or adjoining shorelines, based on the factors in paragraph (f)(3) of this section. If such a determination is made, the Regional Administrator shall notify the owner or operator of the facility in writing and:

(1) Promptly review the facility response plan;

(2) Require amendments to any response plan that does not meet the requirements of this section;

(3) Approve any response plan that meets the requirements of this section; and

(4) Review each response plan periodically thereafter on a schedule established by the Regional Administrator provided that the period between plan reviews does not exceed five years.

(d)(1) The owner or operator of a facility for which a response plan is required under this part shall revise and resubmit revised portions of the response plan within 60 days of each facility change that materially may affect the response to a worst case discharge, including:

(i) A change in the facility's configuration that materially alters the information included in the response plan;

(ii) A change in the type of oil handled, stored, or transferred that materially alters the required response resources;

(iii) A material change in capabilities of the oil spill removal organization(s) that provide equipment and personnel to respond to discharges of oil described in paragraph (h)(5) of this section;

(iv) A material change in the facility's spill prevention and response equipment or emergency response procedures; and

(v) Any other changes that materially affect the implementation of the response plan.

(2) Except as provided in paragraph (d)(1) of this section, amendments to personnel and telephone number lists included in the response plan and a change in the oil spill removal organization(s) that does not result in a material change in support capabilities do not require approval by the Regional Administrator. Facility owners or operators shall provide a copy of such changes to the Regional Administrator as the revisions occur.

(3) The owner or operator of a facility that submits changes to a response plan as provided in paragraph (d)(1) or (d)(2) of this section shall provide the EPA-issued facility identification number (where one has been assigned) with the changes.

(4) The Regional Administrator shall review for approval changes to a response plan submitted pursuant to paragraph (d)(1) of this section for a facility determined pursuant to paragraph (f)(3) of this section to have the potential to cause significant and substantial harm to the environment.

(e) If the owner or operator of a facility determines pursuant to paragraph (a)(2) of this section that the facility could not, because of its location, reasonably be expected to cause substantial harm to the environment by discharging oil into or on the navigable waters or adjoining shorelines, the owner or operator shall complete and maintain at the facility the certification form contained in Appendix C to this part and, in the event an alternative formula that is comparable to one contained in Appendix C to this part is used to evaluate the criterion in paragraph (f)(1)(ii)(B) or (f)(1)(ii)(C) of this section, the owner or operator shall attach documentation to the certification form that demonstrates the reliability and analytical soundness of the comparable formula and shall notify the Regional Administrator in writing that an alternative formula was used.

(f)(1) A facility could, because of its location, reasonably be expected to cause substantial harm to the environment by discharging oil into or on the navigable waters or adjoining shorelines pursuant to paragraph (a)(2) of this section, if it meets any of the following criteria applied in accordance with the flowchart contained in Attachment C-I to Appendix C to this part:

(i) The facility transfers oil over water to or from vessels and has a total oil storage capacity greater than or equal to 42,000 gallons; or

(ii) The facility's total oil storage capacity is greater than or equal to 1 million gallons, and one of the following is true:

(A) The facility does not have secondary containment for each aboveground storage area sufficiently large to contain the capacity of the largest aboveground oil storage tank within each storage area plus sufficient freeboard to allow for precipitation;

(B) The facility is located at a distance (as calculated using the appropriate formula in Appendix C to this part or a comparable formula) such that a discharge from the facility could cause injury to fish and wildlife and sensitive environments. For further description of fish and wildlife and sensitive environments, see Appendices I, II, and III of the ''Guidance for Facility and Vessel Response Plans: Fish and Wildlife and Sensitive Environments'' (see Appendix E to this part, section 10, for availability) and the applicable Area Contingency Plan prepared pursuant to section 311(j)(4) of the Clean Water Act;

(C) The facility is located at a distance (as calculated using the appropriate formula in Appendix C to this part or a comparable formula) such that a discharge from the facility would shut down a public drinking water intake; or

(D) The facility has had a reportable oil spill in an amount greater than or equal to 10,000 gallons within the last 5 years.

(2)(i) To determine whether a facility could, because of its location, reasonably be expected to cause substantial harm to the environment by discharging oil into or on the navigable waters or adjoining shorelines pursuant to paragraph (b) of this section, the Regional Administrator shall consider the following:

(A) Type of transfer operation;

(B) Oil storage capacity;

(C) Lack of secondary containment;

(D) Proximity to fish and wildlife and sensitive environments and other areas determined by the Regional Administrator to possess ecological value;

(E) Proximity to drinking water intakes;

(F) Spill history; and

(G) Other site-specific characteristics and environmental factors that the Regional Administrator determines to be relevant to protecting the environment from harm by discharges of oil into or on navigable waters or adjoining shorelines.

(ii) Any person, including a member of the public or any representative from a Federal, State, or local agency who believes that a facility subject to this section could, because of its location, reasonably be expected to cause substantial harm to the environment by discharging oil into or on the navigable waters or adjoining shorelines may petition the Regional Administrator to determine whether the facility meets the criteria in paragraph (f)(2)(i) of this section. Such petition shall include a discussion of how the factors in paragraph (f)(2)(i) of this section apply to the facility in question. The RA shall consider such petitions and respond in an appropriate amount of time.

(3) To determine whether a facility could, because of its location, reasonably be expected to cause significant and substantial harm to the environment by discharging oil into or on the navigable waters or adjoining shorelines, the Regional Administrator may consider the factors in paragraph (f)(2) of this section as well as the following:

(i) Frequency of past spills;

(ii) Proximity to navigable waters;

(iii) Age of oil storage tanks; and

(iv) Other facility-specific and Region-specific information, including local impacts on public health.

(g)(1) All facility response plans shall be consistent with the requirements of the National Oil and Hazardous Substance Pollution Contingency Plan (40

CFR part 300) and applicable Area Contingency Plans prepared pursuant to section 311(j)(4) of the Clean Water Act. The facility response plan should be coordinated with the local emergency response plan developed by the local emergency planning committee under section 303 of Title III of the Superfund Amendments and Reauthorization Act of 1986 (42 U.S.C. 11001 et seq.). Upon request, the owner or operator should provide a copy of the facility response plan to the local emergency planning committee or State emergency response commission.

(2) The owner or operator shall review relevant portions of the National Oil and Hazardous Substances Pollution Contingency Plan and applicable Area Contingency Plan annually and, if necessary, revise the facility response plan to ensure consistency with these plans.

(3) The owner or operator shall review and update the facility response plan periodically to reflect changes at the facility.

(h) A response plan shall follow the format of the model facility-specific response plan included in Appendix F to this part, unless an equivalent response plan has been prepared to meet State or other Federal requirements. A response plan that does not follow the specified format in Appendix F to this part shall have an emergency response action plan as specified in paragraphs (h)(1) of this section and be supplemented with a cross-reference section to identify the location of the elements listed in paragraphs (h)(2) through (h)(10) of this section. To meet the requirements of this part, a response plan shall address the following elements, as further described in Appendix F to this part:

(1) *Emergency response action plan.* The response plan shall include an emergency response action plan in the format specified in paragraphs (h)(1)(i) through (viii) of this section that is maintained in the front of the response plan, or as a separate document accompanying the response plan, and that includes the following information:

(i) The identity and telephone number of a qualified individual having full authority, including contracting authority, to implement removal actions;

(ii) The identity of individuals or organizations to be contacted in the event of a discharge so that immediate communications between the qualified individual identified in paragraph (h)(1) of this section and the appropriate Federal officials and the persons providing response personnel and equipment can be ensured;

(iii) A description of information to pass to response personnel in the event of a reportable spill;

(iv) A description of the facility's response equipment and its location;

(v) A description of response personnel capabilities, including the duties of persons at the facility during a response action and their response times and qualifications;

(vi) Plans for evacuation of the facility and a reference to community evacuation plans, as appropriate;

(vii) A description of immediate measures to secure the source of the discharge, and to provide adequate containment and drainage of spilled oil; and

(viii) A diagram of the facility.

(2) *Facility information.* The response plan shall identify and discuss the location and type of the facility, the identity and tenure of the present owner and operator, and the identity of the qualified individual identified in paragraph (h)(1) of this section.

(3) *Information about emergency response.* The response plan shall include:

(i) The identity of private personnel and equipment necessary to remove to the maximum extent practicable a worst case discharge and other discharges of oil described in paragraph (h)(5) of this section, and to mitigate or prevent a substantial threat of a worst case discharge (To identify response resources to meet the facility response plan requirements of this section, owners or operators shall follow Appendix E to this part or, where not appropriate, shall clearly demonstrate in the response plan why use of Appendix E of this part is not appropriate at the facility and make comparable arrangements for response resources);

(ii) Evidence of contracts or other approved means for ensuring the availability of such personnel and equipment;

(iii) The identity and the telephone number of individuals or organizations to be contacted in the event of a discharge so that immediate communications between the qualified individual identified in paragraph (h)(1) of this section and the appropriate Federal official and the persons providing response personnel and equipment can be ensured;

(iv) A description of information to pass to response personnel in the event of a reportable spill;

(v) A description of response personnel capabilities, including the duties of persons at the facility during a response action and their response times and qualifications;

(vi) A description of the facility's response equipment, the location of the equipment, and equipment testing;

(vii) Plans for evacuation of the facility and a reference to community evacuation plans, as appropriate;

(viii) A diagram of evacuation routes; and

(ix) A description of the duties of the qualified individual identified in paragraph (h)(1) of this section, that include:

(A) Activate internal alarms and hazard communication systems to notify all facility personnel;

(B) Notify all response personnel, as needed;

(C) Identify the character, exact source, amount, and extent of the release, as well as the other items needed for notification;

(D) Notify and provide necessary information to the appropriate Federal, State, and local authorities with designated response roles, including the National Response Center, State Emergency Response Commission, and Local Emergency Planning Committee;

(E) Assess the interaction of the spilled substance with water and/or other substances stored at the facility and notify response personnel at the scene of that assessment;

(F) Assess the possible hazards to human health and the environment due to the release. This assessment must consider both the direct and indirect effects of the release (i.e., the effects of any toxic, irritating, or asphyxiating gases that may be generated, or the effects of any hazardous surface water runoffs from water or chemical agents used to control fire and heat-induced explosion);

(G) Assess and implement prompt removal actions to contain and remove the substance released;

(H) Coordinate rescue and response actions as previously arranged with all response personnel;

(I) Use authority to immediately access company funding to initiate cleanup activities; and

(J) Direct cleanup activities until properly relieved of this responsibility.

(4) *Hazard evaluation.* The response plan shall discuss the facility's known or reasonably identifiable history of discharges reportable under 40 CFR part 110 for the entire life of the facility and shall identify areas within the facility where discharges could occur and what the potential effects of the discharges would be on the affected environment. To assess the range of areas potentially affected, owners or operators shall, where appropriate, consider the distance calculated in paragraph (f)(1)(ii) of this section to determine whether a facility could, because of its location, reasonably be expected to cause substantial harm to the environment by discharging oil into or on the navigable waters or adjoining shorelines.

(5) *Response planning levels.* The response plan shall include discussion of specific planning scenarios for:

(i) A worst case discharge, as calculated using the appropriate worksheet in Appendix D to this part. In cases where the Regional Administrator determines that the worst case discharge volume calculated by the facility is not appropriate, the Regional Administrator may specify the worst case discharge amount to be used for response planning at the facility. For complexes, the worst case planning quantity shall be the larger of the amounts calculated for each component of the facility;

(ii) A discharge of 2,100 gallons or less, provided that this amount is less than the worst case discharge amount. For complexes, this planning quantity shall be the larger of the amounts calculated for each component of the facility; and

(iii) A discharge greater than 2,100 gallons and less than or equal to 36,000 gallons or 10 percent of the capacity of the largest tank at the facility, whichever is less, provided that this amount is less than the worst case discharge amount. For complexes, this planning quantity shall be the larger of the amounts calculated for each component of the facility.

(6) *Discharge detection systems.* The response plan shall describe the procedures and equipment used to detect discharges.

(7) *Plan implementation.* The response plan shall describe:

(i) Response actions to be carried out by facility personnel or contracted personnel under the response plan to ensure the safety of the facility and to mitigate or prevent discharges described in paragraph (h)(5) of this section or the substantial threat of such discharges;

(ii) A description of the equipment to be used for each scenario;

(iii) Plans to dispose of contaminated cleanup materials; and

(iv) Measures to provide adequate containment and drainage of spilled oil.

(8) *Self-inspection, drills/exercises, and response training.* The response plan shall include:

(i) A checklist and record of inspections for tanks, secondary containment, and response equipment;

(ii) A description of the drill/exercise program to be carried out under the response plan as described in § 112.21;

(iii) A description of the training program to be carried out under the response plan as described in § 112.21; and

(iv) Logs of discharge prevention meetings, training sessions, and drills/exercises. These logs may be maintained as an annex to the response plan.

(9) *Diagrams.* The response plan shall include site plan and drainage plan diagrams.

(10) *Security systems.* The response plan shall include a description of facility security systems.

(11) *Response plan cover sheet.* The response plan shall include a completed response plan cover sheet provided in Section 2.0 of Appendix F to this part.

(i)(1) In the event the owner or operator of a facility does not agree with the Regional Administrator's determination that the facility could, because of its location, reasonably be expected to cause substantial harm or significant and substantial harm to the environment by discharging oil into or on the navigable waters or adjoining shorelines, or that amendments to the facility response plan are necessary prior to approval, such as changes to the worst case discharge planning volume, the owner or operator may submit a request for reconsideration to the Regional Administrator and provide additional information and data in writing to support the request. The request and accompanying information must be submitted to the Regional Administrator within 60 days of receipt of notice of the Regional Administrator's original decision. The Regional Administrator shall consider the request and render a decision as rapidly as practicable.

(2) In the event the owner or operator of a facility believes a change in the facility's classification status is warranted because of an unplanned event or change in the facility's characteristics (i.e., substantial harm or significant and substantial harm), the owner or operator may submit a request for reconsideration to the Regional Administrator and provide additional information and data in writing to support the request. The Regional Administrator shall consider the request and render a decision as rapidly as practicable.

(3) After a request for reconsideration under paragraph (i)(1) or (i)(2) of this section has been denied by the Regional Administrator, an owner or operator may appeal a determination made by the Regional Administrator. The appeal shall be made to the EPA Administrator and shall be made in writing within 60 days of receipt of the decision from the Regional Administrator that the request for reconsideration was denied. A complete copy of the appeal must be sent to the Regional Administrator at the time the appeal is made. The appeal shall contain a clear and concise statement of the issues and points of fact in the

case. It also may contain additional information from the owner or operator, or from any other person. The EPA Administrator may request additional information from the owner or operator, or from any other person. The EPA Administrator shall render a decision as rapidly as practicable and shall notify the owner or operator of the decision.

[59 FR 34098, July 1, 1994]

§ 112.21 Facility response training and drills/exercises.

(a) The owner or operator of any facility required to prepare a facility response plan under § 112.20 shall develop and implement a facility response training program and a drill/exercise program that satisfy the requirements of this section. The owner or operator shall describe the programs in the response plan as provided in § 112.20(h)(8).

(b) The facility owner or operator shall develop a facility response training program to train those personnel involved in oil spill response activities. It is recommended that the training program be based on the USCG's Training Elements for Oil Spill Response, as applicable to facility operations. An alternative program can also be acceptable subject to approval by the Regional Administrator.

(1) The owner or operator shall be responsible for the proper instruction of facility personnel in the procedures to respond to discharges of oil and in applicable oil spill response laws, rules, and regulations.

(2) Training shall be functional in nature according to job tasks for both supervisory and non-supervisory operational personnel.

(3) Trainers shall develop specific lesson plans on subject areas relevant to facility personnel involved in oil spill response and cleanup.

(c) The facility owner or operator shall develop a program of facility response drills/exercises, including evaluation procedures. A program that follows the National Preparedness for Response Exercise Program (PREP) (see Appendix E to this part, section 10, for availability) will be deemed satisfactory for purposes of this section. An alternative program can also be acceptable subject to approval by the Regional Administrator.

[59 FR 34101, July 1, 1994]

APPENDIX A TO PART 112—MEMORANDUM OF UNDERSTANDING BETWEEN THE SECRETARY OF TRANSPORTATION AND THE ADMINISTRATOR OF THE ENVIRONMENTAL PROTECTION AGENCY

SECTION II—DEFINITIONS

The Environmental Protection Agency and the Department of Transportation agree that for the purposes of Executive Order 11548, the term:

(1) *Non-transportation-related onshore and offshore facilities* means:

(A) Fixed onshore and offshore oil well drilling facilities including all equipment and appurtenances related thereto used in drilling operations for exploratory or development wells, but excluding any terminal facility, unit or process integrally associated with the handling or transferring of oil in bulk to or from a vessel.

(B) Mobile onshore and offshore oil well drilling platforms, barges, trucks, or other mobile facilities including all equipment and appurtenances related thereto when such mobile facilities are fixed in position for the purpose of drilling operations for exploratory or development wells, but excluding any terminal facility, unit or process integrally associated with the handling or transferring of oil in bulk to or from a vessel.

(C) Fixed onshore and offshore oil production structures, platforms, derricks, and rigs including all equipment and appurtenances related thereto, as well as completed wells and the wellhead separators, oil separators, and storage facilities used in the production of oil, but excluding any terminal facility, unit or process integrally associated with the handling or transferring of oil in bulk to or from a vessel.

(D) Mobile onshore and offshore oil production facilities including all equipment and appurtenances related thereto as well as completed wells and wellhead equipment, piping from wellheads to oil separators, oil separators, and storage facilities used in the production of oil when such mobile facilities are fixed in position for the purpose of oil production operations, but excluding any terminal facility, unit or process integrally associated with the handling or transferring of oil in bulk to or from a vessel.

(E) Oil refining facilities including all equipment and appurtenances related thereto as well as in-plant processing units, storage units, piping, drainage systems and waste treatment units used in the refining of oil, but excluding any terminal facility, unit or process integrally associated with the

handling or transferring of oil in bulk to or from a vessel.

(F) Oil storage facilities including all equipment and appurtenances related thereto as well as fixed bulk plant storage, terminal oil storage facilities, consumer storage, pumps and drainage systems used in the storage of oil, but excluding inline or breakout storage tanks needed for the continuous operation of a pipeline system and any terminal facility, unit or process integrally associated with the handling or transferring of oil in bulk to or from a vessel.

(G) Industrial, commercial, agricultural or public facilities which use and store oil, but excluding any terminal facility, unit or process integrally associated with the handling or transferring of oil in bulk to or from a vessel.

(H) Waste treatment facilities including in-plant pipelines, effluent discharge lines, and storage tanks, but excluding waste treatment facilities located on vessels and terminal storage tanks and appurtenances for the reception of oily ballast water or tank washings from vessels and associated systems used for off-loading vessels.

(I) Loading racks, transfer hoses, loading arms and other equipment which are appurtenant to a nontransportation-related facility or terminal facility and which are used to transfer oil in bulk to or from highway vehicles or railroad cars.

(J) Highway vehicles and railroad cars which are used for the transport of oil exclusively within the confines of a nontransportation-related facility and which are not intended to transport oil in interstate or intrastate commerce.

(K) Pipeline systems which are used for the transport of oil exclusively within the confines of a nontransportation-related facility or terminal facility and which are not intended to transport oil in interstate or intrastate commerce, but excluding pipeline systems used to transfer oil in bulk to or from a vessel.

(2) *Transportation-related onshore and offshore facilities* means:

(A) Onshore and offshore terminal facilities including transfer hoses, loading arms and other equipment and appurtenances used for the purpose of handling or transferring oil in bulk to or from a vessel as well as storage tanks and appurtenances for the reception of oily ballast water or tank washings from vessels, but excluding terminal waste treatment facilities and terminal oil storage facilities.

(B) Transfer hoses, loading arms and other equipment appurtenant to a non-transportation-related facility which is used to transfer oil in bulk to or from a vessel.

(C) Interstate and intrastate onshore and offshore pipeline systems including pumps and appurtenances related thereto as well as in-line or breakout storage tanks needed for the continuous operation of a pipeline system, and pipelines from onshore and offshore oil production facilities, but excluding onshore and offshore piping from wellheads to oil separators and pipelines which are used for the transport of oil exclusively within the confines of a nontransportation-related facility or terminal facility and which are not intended to transport oil in interstate or intrastate commerce or to transfer oil in bulk to or from a vessel.

(D) Highway vehicles and railroad cars which are used for the transport of oil in interstate or intrastate commerce and the equipment and appurtenances related thereto, and equipment used for the fueling of locomotive units, as well as the rights-of-way on which they operate. Excluded are highway vehicles and railroad cars and motive power used exclusively within the confines of a nontransportation-related facility or terminal facility and which are not intended for use in interstate or intrastate commerce.

APPENDIX B TO PART 112—MEMORANDUM OF UNDERSTANDING AMONG THE SECRETARY OF THE INTERIOR, SECRETARY OF TRANSPORTATION, AND ADMINISTRATOR OF THE ENVIRONMENTAL PROTECTION AGENCY

PURPOSE

This Memorandum of Understanding (MOU) establishes the jurisdictional responsibilities for offshore facilities, including pipelines, pursuant to section 311 (j)(1)(c), (j)(5), and (j)(6)(A) of the Clean Water Act (CWA), as amended by the Oil Pollution Act of 1990 (Public Law 101–380). The Secretary of the Department of the Interior (DOI), Secretary of the Department of Transportation (DOT), and Administrator of the Environmental Protection Agency (EPA) agree to the division of responsibilities set forth below for spill prevention and control, response planning, and equipment inspection activities pursuant to those provisions.

BACKGROUND

Executive Order (E.O.) 12777 (56 FR 54757) delegates to DOI, DOT, and EPA various responsibilities identified in section 311(j) of the CWA. Sections 2(b)(3), 2(d)(3), and 2(e)(3) of E.O. 12777 assigned to DOI spill prevention and control, contingency planning, and equipment inspection activities associated with offshore facilities. Section 311(a)(11) defines the term ''offshore facility'' to include facilities of any kind located in, on, or under navigable waters of the United States. By using this definition, the traditional DOI role of regulating facilities on the Outer Continental Shelf is expanded by E.O. 12777 to include inland lakes, rivers, streams, and any other inland waters.

RESPONSIBILITIES

Pursuant to section 2(i) of E.O. 12777, DOI redelegates, and EPA and DOT agree to assume, the functions vested in DOI by sections 2(b)(3), 2(d)(3), and 2(e)(3) of E.O. 12777 as set forth below. For purposes of this MOU, the term ''coast line'' shall be defined as in the Submerged Lands Act (43 U.S.C. 1301(c)) to mean ''the line of ordinary low water along that portion of the coast which is in direct contact with the open sea and the line marking the seaward limit of inland waters.''

1. To EPA, DOI redelegates responsibility for non-transportation-related offshore facilities located landward of the coast line.

2. To DOT, DOI redelegates responsibility for transportation-related facilities, including pipelines, located landward of the coast line. The DOT retains jurisdiction for deepwater ports and their associated seaward pipelines, as delegated by E.O. 12777.

3. The DOI retains jurisdiction over facilities, including pipelines, located seaward of the coast line, except for deepwater ports and associated seaward pipelines delegated by E.O. 12777 to DOT.

EFFECTIVE DATE

This MOU is effective on the date of the final execution by the indicated signatories.

LIMITATIONS

1. The DOI, DOT, and EPA may agree in writing to exceptions to this MOU on a facility-specific basis. Affected parties will receive notification of the exceptions.

2. Nothing in this MOU is intended to replace, supersede, or modify any existing agreements between or among DOI, DOT, or EPA.

MODIFICATION AND TERMINATION

Any party to this agreement may propose modifications by submitting them in writing to the heads of the other agency/department. No modification may be adopted except with the consent of all parties. All parties shall indicate their consent to or disagreement with any proposed modification within 60 days of receipt. Upon the request of any party, representatives of all parties shall meet for the purpose of considering exceptions or modifications to this agreement. This MOU may be terminated only with the mutual consent of all parties.

Dated: November 8, 1993.

Bruce Babbitt,

Secretary of the Interior.

Dated: December 14, 1993.

Federico Peña,

Secretary of Transportation.

Dated: February 3, 1994.

Carol M. Browner,

Administrator, Environmental Protection Agency.

[59 FR 34102, July 1, 1994]

APPENDIX C TO PART 112—SUBSTANTIAL HARM CRITERIA

1.0 Introduction

The flowchart provided in Attachment C–I to this appendix shows the decision tree with the criteria to identify whether a facility ''could reasonably be expected to cause substantial harm to the environment by discharging into or on the navigable waters or adjoining shorelines.'' In addition, the Regional Administrator has the discretion to identify facilities that must prepare and submit facility-specific response plans to EPA.

1.1 Definitions

1.1.1 *Great Lakes* means Lakes Superior, Michigan, Huron, Erie, and Ontario, their connecting and tributary waters, the Saint Lawrence River as far as Saint Regis, and adjacent port areas.

1.1.2 Higher Volume Port Areas include

(1) Boston, MA;

(2) New York, NY;

(3) Delaware Bay and River to Philadelphia, PA;

(4) St. Croix, VI;

(5) Pascagoula, MS;

(6) Mississippi River from Southwest Pass, LA to Baton Rouge, LA;

(7) Louisiana Offshore Oil Port (LOOP), LA;

(8) Lake Charles, LA;

(9) Sabine-Neches River, TX;

(10) Galveston Bay and Houston Ship Channel, TX;

(11) Corpus Christi, TX;

(12) Los Angeles/Long Beach Harbor, CA;

(13) San Francisco Bay, San Pablo Bay, Carquinez Strait, and Suisun Bay to Antioch, CA;

(14) Straits of Juan de Fuca from Port Angeles, WA to and including Puget Sound, WA;

(15) Prince William Sound, AK; and

(16) Others as specified by the Regional Administrator for any EPA Region.

1.1.3 *Inland Area* means the area shoreward of the boundary lines defined in 46 CFR part 7, except in the Gulf of Mexico. In the Gulf of Mexico, it means the area shoreward of the lines of demarcation (COLREG lines as defined in 33 CFR 80.740—80.850). The inland area does not include the Great Lakes.

1.1.4 *Rivers and Canals* means a body of water confined within the inland area, including the Intracoastal Waterways and other waterways artificially created for navigating that have project depths of 12 feet or less.

2.0 Description of Screening Criteria for the Substantial Harm Flowchart

A facility that has the potential to cause substantial harm to the environment in the event of a discharge must prepare and submit a facility-specific response plan to EPA in accordance with Appendix F to this part. A description of the screening criteria for the substantial harm flowchart is provided below:

2.1 *Non-Transportation-Related Facilities With a Total Oil Storage Capacity Greater Than or Equal to 42,000 Gallons Where Operations Include Over-Water Transfers of Oil.* A non-transportation-related facility with a total oil storage capacity greater than 42,000 gallons that transfers oil over water to or from vessels must submit a response plan to EPA. Daily oil transfer operations at these types of facilities occur between barges and vessels and onshore bulk storage tanks over open water. These facilities are located adjacent to navigable water.

2.2 *Lack of Adequate Secondary Containment at Facilities With a Total Oil Storage Capacity Greater Than or Equal to 1 Million Gallons.* Any facility with a total oil storage capacity greater than or equal to 1 million gallons without secondary containment sufficiently large to contain the capacity of the largest aboveground oil storage tank within each area plus sufficient freeboard to allow for precipitation must submit a response plan to EPA. Secondary containment structures that meet the standard of good engineering practice for the purposes of this part include berms, dikes, retaining walls, curbing, culverts, gutters, or other drainage systems.

2.3 *Proximity to Fish and Wildlife and Sensitive Environments at Facilities With a Total Oil Storage Capacity Greater Than or Equal to 1 Million Gallons.* A facility with a total oil storage capacity greater than or equal to 1 million gallons must submit its response plan if it is located at a distance such that a discharge from the facility could cause injury (as defined at 40 CFR 112.2) to fish and wildlife and sensitive environments. For further description of fish and wildlife and sensitive environments, see Appendices I, II, and III to DOC/NOAA's ''Guidance for Facility and Vessel Response Plans: Fish and Wildlife and Sensitive Environments'' (see Appendix E to this part, section 10, for availability) and the applicable Area Contingency Plan. Facility owners or operators must determine the distance at which an oil spill could cause injury to fish and wildlife and sensitive environments using the appropriate formula presented in Attachment C–III to this appendix or a comparable formula.

2.4 *Proximity to Public Drinking Water Intakes at Facilities with a Total Storage Oil Capacity Greater Than or Equal to 1 Million Gallons.* A facility with a total storage capacity greater than or equal to 1 million gallons must submit its response plan if it is located at a distance such that a discharge from the facility would shut down a public drinking water intake, which is analogous to a public water system as described at 40 CFR 143.2(c). The distance at which an oil spill from an SPCC-regulated facility would shut down a public drinking water intake shall be calculated using the appropriate formula presented in Attachment C–III to this appendix or a comparable formula.

2.5 *Facilities That Have Experienced Reportable Oil Spills in an Amount Greater Than or Equal to 10,000 Gallons Within the Past 5 Years and That Have a Total Oil Storage Capacity Greater Than or Equal to 1 Million Gallons.* A facility's oil spill history within the past 5 years shall be considered in the evaluation for substantial harm. Any facility with a total oil storage capacity greater than or equal to 1 million gallons that has experienced a reportable oil spill in an amount greater than or equal to 10,000 gallons within the past 5 years must submit a response plan to EPA.

3.0 Certification for Facilities That Do Not Pose Substantial Harm

If the facility does not meet the substantial harm criteria listed in Attachment C–I to this appendix, the owner or operator shall complete and maintain at the facility the certification form contained in Attachment C–II to this appendix. In the event an alternative formula that is comparable to the one in this appendix is used to evaluate the substantial harm criteria, the owner or operator shall attach documentation to the certification form that demonstrates the reliability and analytical soundness of the comparable formula and shall notify the Regional Administrator in writing that an alternative formula was used.

4.0 References

Chow, V.T. 1959. Open Channel Hydraulics. McGraw Hill.

USCG IFR (58 FR 7353, February 5, 1993). This document is available through EPA's rulemaking docket as noted in Appendix E to this part, section 10.

ATTACHMENTS TO APPENDIX C

Attachment C - I

Flowchart of Criteria for Substantial Harm

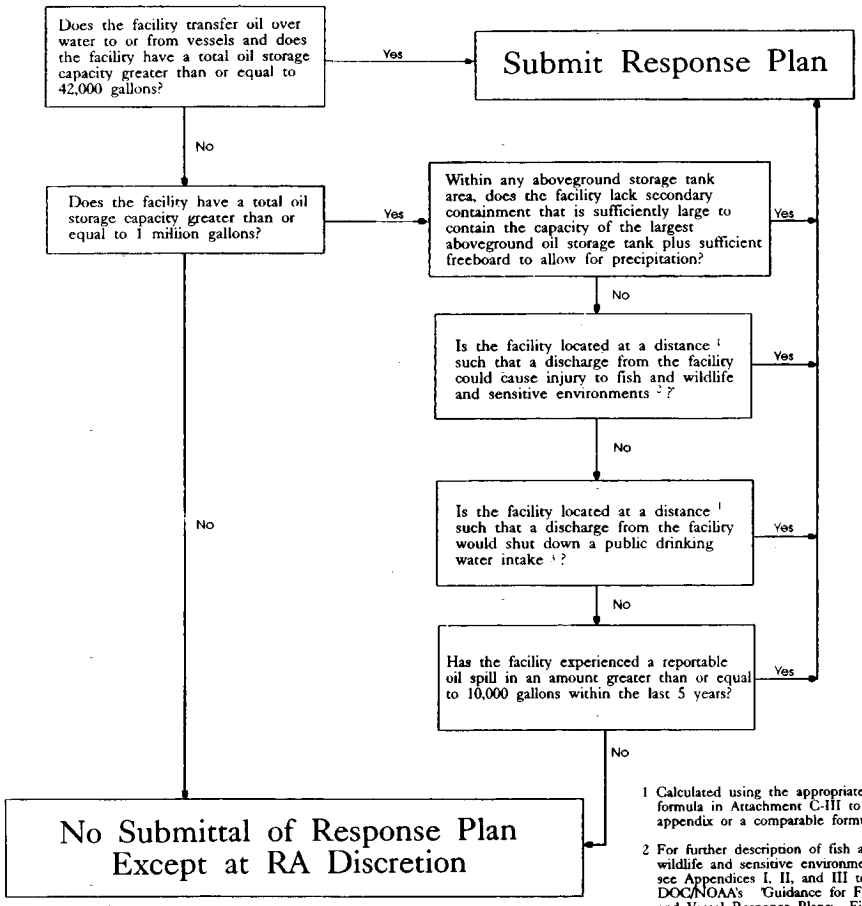

1 Calculated using the appropriate formula in Attachment C-III to this appendix or a comparable formula.

2 For further description of fish and wildlife and sensitive environments, see Appendices I, II, and III to DOC/NOAA's "Guidance for Facility and Vessel Response Plans: Fish and Wildlife and Sensitive Environments" (59 FR 14713, March 29, 1994) and the applicable Area Contingency Plan.

3 Public drinking water intakes are analogous to public water systems as described at 40 CFR 143.2(c).

ATTACHMENT C–II—CERTIFICATION OF THE APPLICABILITY OF THE SUBSTANTIAL HARM CRITERIA

Facility Name: _____

Facility Address: _____

1. Does the facility transfer oil over water to or from vessels and does the facility have a total oil storage capacity greater than or equal to 42,000 gallons?

Yes _____ No _____

2. Does the facility have a total oil storage capacity greater than or equal to 1 million gallons and does the facility lack secondary containment that is sufficiently large to contain the capacity of the largest aboveground oil storage tank plus sufficient freeboard to allow for precipitation within any aboveground oil storage tank area?

Yes _____ No _____

3. Does the facility have a total oil storage capacity greater than or equal to 1 million gallons and is the facility located at a distance (as calculated using the appropriate formula in Attachment C–III to this appendix or a comparable formula[1]) such that a discharge from the facility could cause injury to fish and wildlife and sensitive environments? For further description of fish and wildlife and sensitive environments, see Appendices I, II, and III to DOC/NOAA's ''Guidance for Facility and Vessel Response Plans: Fish and Wildlife and Sensitive Environments'' (see Appendix E to this part, section 10, for availability) and the applicable Area Contingency Plan.

Yes _____ No _____

4. Does the facility have a total oil storage capacity greater than or equal to 1 million gallons and is the facility located at a distance (as calculated using the appropriate formula in Attachment C-III to this appendix or a comparable formula[1]) such that a discharge from the facility would shut down a public drinking water intake[2]?

Yes _____ No _____

5. Does the facility have a total oil storage capacity greater than or equal to 1 million gallons and has the facility experienced a reportable oil spill in an amount greater than or equal to 10,000 gallons within the last 5 years?

Yes _____ No _____

Certification

I certify under penalty of law that I have personally examined and am familiar with the information submitted in this document, and that based on my inquiry of those individuals responsible for obtaining this information, I believe that the submitted information is true, accurate, and complete.

_____

Signature

_____

Name (please type or print)

_____

Title

_____

Date

ATTACHMENT C-III—CALCULATION OF THE PLANNING DISTANCE

1.0 Introduction

1.1 The facility owner or operator must evaluate whether the facility is located at a distance such that a discharge from the facility could cause injury to fish and wildlife and sensitive environments or disrupt operations at a public drinking water intake. To quantify that distance, EPA considered oil transport mechanisms over land and on still, tidal influence, and moving navigable waters. EPA has determined that the primary concern for calculation of a planning distance is the transport of oil in navigable waters during adverse weather conditions. Therefore, two formulas have been developed to determine distances for planning purposes from the point of discharge at the facility to the potential site of impact on moving and still waters, respectively. The formula for oil transport on moving navigable water is based on the velocity of the water body and the time interval for arrival of response resources. The still water formula accounts for the spread of discharged oil over the surface of the water. The method to determine oil transport on tidal influence areas is based on the type of oil spilled and the distance down current during ebb tide and up current during flood tide to the point of maximum tidal influence.

1.2 EPA's formulas were designed to be simple to use. However, facility owners or operators may calculate planning distances using more sophisticated formulas, which take into account broader scientific or engineering principles, or local conditions. Such comparable formulas may result in different planning distances than EPA's formulas. In the event that an alternative formula that is comparable to one contained in this appendix is used to evaluate the criterion in 40 CFR 112.20(f)(1)(ii)(B) or (f)(1)(ii)(C), the owner or operator shall attach documentation to the response plan cover sheet contained in Appendix F to this part that demonstrates the reliability and analytical soundness of the alternative formula and shall notify the Regional Administrator in

[1] If a comparable formula is used, documentation of the reliability and analytical soundness of the comparable formula must be attached to this form.

[2] For the purposes of 40 CFR part 112, public drinking water intakes are analogous to public water systems as described at 40 CFR 143.2(c).

writing that an alternative formula was used.[1]

1.3 A regulated facility may meet the criteria for the potential to cause substantial harm to the environment without having to perform a planning distance calculation. For facilities that meet the substantial harm criteria because of inadequate secondary containment or oil spill history, as listed in the flowchart in Attachment C–I to this appendix, calculation of the planning distance is unnecessary. For facilities that do not meet the substantial harm criteria for secondary containment or oil spill history as listed in the flowchart, calculation of a planning distance for proximity to fish and wildlife and sensitive environments and public drinking water intakes is required, unless it is clear without performing the calculation (e.g., the facility is located in a wetland) that these areas would be impacted.

1.4 A facility owner or operator who must perform a planning distance calculation on navigable water is only required to do so for the type of navigable water conditions (i.e., moving water, still water, or tidal- influenced water) applicable to the facility. If a facility owner or operator determines that more than one type of navigable water condition applies, then the facility owner or operator is required to perform a planning distance calculation for each navigable water type to determine the greatest single distance that oil may be transported. As a result, the final planning distance for oil transport on water shall be the greatest individual distance rather than a summation of each calculated planning distance.

1.5 The planning distance formula for transport on moving waterways contains three variables: the velocity of the navigable water (v), the response time interval (t), and a conversion factor (c). The velocity, v, is determined by using the Chezy-Manning equation, which, in this case, models the flood flow rate of water in open channels. The Chezy-Manning equation contains three variables which must be determined by facility owners or operators. Manning's Roughness Coefficient (for flood flow rates), n, can be determined from Table 1 of this attachment. The hydraulic radius, r, can be estimated using the average mid-channel depth from charts provided by the sources listed in Table 2 of this attachment. The average slope of the river, s, can be determined using topographic maps that can be ordered from the U.S. Geological Survey, as listed in Table 2 of this attachment.

1.6 Table 3 of this attachment contains specified time intervals for estimating the arrival of response resources at the scene of a discharge. Assuming no prior planning, response resources should be able to arrive at the discharge site within 12 hours of the discovery of any oil discharge in Higher Volume Port Areas and within 24 hours in Great Lakes and all other river, canal, inland, and nearshore areas. The specified time intervals in Table 3 of Appendix C are to be used only to aid in the identification of whether a facility could cause substantial harm to the environment. Once it is determined that a plan must be developed for the facility, the owner or operator shall reference Appendix E to this part to determine appropriate resource levels and response times. The specified time intervals of this appendix include a 3-hour time period for deployment of boom and other response equipment. The Regional Administrator may identify additional areas as appropriate.

2.0 Oil Transport on Moving Navigable Waters

2.1 The facility owner or operator must use the following formula or a comparable formula as described in §112.20(a)(3) to calculate the planning distance for oil transport on moving navigable water:

$d = v \times t \times c$; where

d: the distance downstream from a facility within which fish and wildlife and sensitive environments could be injured or a public drinking water intake would be shut down in the event of an oil discharge (in miles);

v: the velocity of the river/navigable water of concern (in ft/sec) as determined by Chezy-Manning's equation (see below and Tables 1 and 2 of this attachment);

t: the time interval specified in Table 3 based upon the type of water body and location (in hours); and

c: constant conversion factor 0.68 sec•mile/hr•ft (3600 sec/hr ÷ 5280 ft/mile).

2.2 Chezy-Manning's equation is used to determine velocity:

$v = 1.5/n \times r^{2/3} \times s^{1/2}$; where

v=the velocity of the river of concern (in ft/sec);

n=Manning's Roughness Coefficient from Table 1 of this attachment;

[1] For persistent oils or non-persistent oils, a worst case trajectory model (i.e., an alternative formula) may be substituted for the distance formulas described in still, moving, and tidal waters, subject to Regional Administrator's review of the model. An example of an alternative formula that is comparable to the one contained in this appendix would be a worst case trajectory calculation based on credible adverse winds, currents, and/or river stages, over a range of seasons, weather conditions, and river stages. Based on historical information or a spill trajectory model, the Agency may require that additional fish and wildlife and sensitive environments or public drinking water intakes also be protected.

r=the hydraulic radius; the hydraulic radius can be approximated for parabolic channels by multiplying the average mid-channel depth of the river (in feet) by 0.667 (sources for obtaining the mid-channel depth are listed in Table 2 of this attachment); and

s=the average slope of the river (unitless) obtained from U.S. Geological Survey topographic maps at the address listed in Table 2 of this attachment.

TABLE 1.—MANNING'S ROUGHNESS COEFFICIENT FOR NATURAL STREAMS

[NOTE: Coefficients are presented for high flow rates at or near flood stage.]

Stream description	Roughness coefficient (n)
Minor Streams (Top Width <100 ft.)	
Clean:	
Straight	0.03
Winding	0.04
Sluggish (Weedy, deep pools):	
No trees or brush	0.06
Trees and/or brush	0.10
Major Streams (Top Width >100 ft.)	
Regular section:	
(No boulders/brush)	0.035
Irregular section:	
(Brush)	0.05

TABLE 2.—SOURCES OF R AND S FOR THE CHEZY-MANNING EQUATION

All of the charts and related publications for navigational waters may be ordered from:
Distribution Branch
(N/CG33)
National Ocean Service
Riverdale, Maryland 20737–1199
Phone: (301) 436–6990
There will be a charge for materials ordered and a VISA or Mastercard will be accepted.

The mid-channel depth to be used in the calculation of the hydraulic radius (r) can be obtained directly from the following sources:

Charts of Canadian Coastal and Great Lakes Waters:
Canadian Hydrographic Service
Department of Fisheries and Oceans Institute
P.O. Box 8080
1675 Russell Road
Ottawa, Ontario KIG 3H6
Canada
Phone: (613) 998–4931

Charts and Maps of Lower Mississippi River

TABLE 2.—SOURCES OF R AND S FOR THE CHEZY-MANNING EQUATION—Continued

(Gulf of Mexico to Ohio River and St. Francis, White, Big Sunflower, Atchafalaya, and other rivers):
U.S. Army Corps of Engineers
Vicksburg District
P.O. Box 60
Vicksburg, Mississippi 39180
Phone: (601) 634–5000

Charts of Upper Mississippi River and Illinois Waterway to Lake Michigan:
U.S. Army Corps of Engineers
Rock Island District
P.O. Box 2004
Rock Island, Illinois 61204
Phone: (309) 794–5552

Charts of Missouri River:
U.S. Army Corps of Engineers
Omaha District
6014 U.S. Post Office and Courthouse
Omaha, Nebraska 68102
Phone: (402) 221–3900

Charts of Ohio River:
U.S. Army Corps of Engineers
Ohio River Division
P.O. Box 1159
Cincinnati, Ohio 45201
Phone: (513) 684–3002

Charts of Tennessee Valley Authority Reservoirs, Tennessee River and Tributaries:
Tennessee Valley Authority
Maps and Engineering Section
416 Union Avenue
Knoxville, Tennessee 37902
Phone: (615) 632–2921

Charts of Black Warrior River, Alabama River, Tombigbee River, Apalachicola River and Pearl River:
U.S. Army Corps of Engineers
Mobile District
P.O. Box 2288
Mobile, Alabama 36628–0001
Phone: (205) 690–2511

The average slope of the river (s) may be obtained from topographic maps:
U.S. Geological Survey
Map Distribution
Federal Center
Bldg. 41
Box 25286
Denver, Colorado 80225

TABLE 2.—SOURCES OF R AND S FOR THE CHEZY-MANNING EQUATION—Continued

Additional information can be obtained from the following sources:

1. The State's Department of Natural Resources (DNR) or the State's Aids to Navigation office;
2. A knowledgeable local marina operator; or
3. A knowledgeable local water authority (e.g., State water commission)

2.3 The average slope of the river (s) can be determined from the topographic maps using the following steps:

(1) Locate the facility on the map.

(2) Find the Normal Pool Elevation at the point of discharge from the facility into the water (A).

(3) Find the Normal Pool Elevation of the public drinking water intake or fish and wildlife and sensitive environment located downstream (B) (Note: The owner or operator should use a minimum of 20 miles downstream as a cutoff to obtain the average slope if the location of a specific public drinking water intake or fish and wildlife and sensitive environment is unknown).

(4) If the Normal Pool Elevation is not available, the elevation contours can be used to find the slope. Determine elevation of the water at the point of discharge from the facility (A). Determine the elevation of the water at the appropriate distance downstream (B). The formula presented below can be used to calculate the slope.

(5) Determine the distance (in miles) between the facility and the public drinking water intake or fish and wildlife and sensitive environments (C).

(6) Use the following formula to find the slope, which will be a unitless value: Average Slope=[(A−B) (ft)/C (miles)] × [1 mile/5280 feet]

2.4 If it is not feasible to determine the slope and mid-channel depth by the Chezy-Manning equation, then the river velocity can be approximated on- site. A specific length, such as 100 feet, can be marked off along the shoreline. A float can be dropped into the stream above the mark, and the time required for the float to travel the distance can be used to determine the velocity in feet per second. However, this method will not yield an average velocity for the length of the stream, but a velocity only for the specific location of measurement. In addition, the flow rate will vary depending on weather conditions such as wind and rainfall. It is recommended that facility owners or operators repeat the measurement under a variety of conditions to obtain the most accurate estimate of the surface water velocity under adverse weather conditions.

2.5 The planning distance calculations for moving and still navigable waters are based on worst case discharges of persistent oils. Persistent oils are of concern because they can remain in the water for significant periods of time and can potentially exist in large quantities downstream. Owners or operators of facilities that store persistent as well as non-persistent oils may use a comparable formula. The volume of oil discharged is not included as part of the planning distance calculation for moving navigable waters. Facilities that will meet this substantial harm criterion are those with facility capacities greater than or equal to 1 million gallons. It is assumed that these facilities are capable of having an oil discharge of sufficient quantity to cause injury to fish and wildlife and sensitive environments or shut down a public drinking water intake. While owners or operators of transfer facilities that store greater than or equal to 42,000 gallons are not required to use a planning distance formula for purposes of the substantial harm criteria, they should use a planning distance calculation in the development of facility-specific response plans.

TABLE 3.—SPECIFIED TIME INTERVALS

Operating areas	Substantial harm planning time (hrs)
Higher volume port area.	12 hour arrival+3 hour deployment=15 hours.
Great Lakes ...	24 hour arrival+3 hour deployment=27 hours.
All other rivers and canals, inland, and nearshore areas.	24 hour arrival+3 hour deployment=27 hours.

2.6 *Example of the Planning Distance Calculation for Oil Transport on Moving Navigable Waters.* The following example provides a sample calculation using the planning distance formula for a facility discharging oil into the Monongahela River:

(1) Solve for v by evaluating n, r, and s for the Chezy-Manning equation:

Find the roughness coefficient, n, on Table 1 of this attachment for a regular section of a major stream with a top width greater than 100 feet. The top width of the river can be found from the topographic map.

n=0.035.

Find slope, s, where A=727 feet, B=710 feet, and C=25 miles.

Solving:

s=[(727 ft−1710 ft)/25 miles] x [1 mile/5280 feet]=1.3×10^{-4}

The average mid-channel depth is found by averaging the mid-channel depth for each mile along the length of the river between

the facility and the public drinking water intake or the fish or wildlife or sensitive environment (or 20 miles downstream if applicable). This value is multiplied by 0.667 to obtain the hydraulic radius. The mid-channel depth is found by obtaining values for r and s from the sources shown in Table 2 for the Monongahela River.

Solving:

$r=0.667\times 20$ feet=13.33 feet

Solve for v using:

$v=1.5/n\times r^{2/3}\times s^{1/2}$:

$v=[1.5/0.035]\times(13.33)^{2/3}\times(1.3\times 10^{-4})^{1/2}$

v=2.73 feet/second

(2) Find t from Table 3 of this attachment. The Monongahela River's resource response time is 27 hours.

(3) Solve for planning distance, d:

d=v x t x c

d=(2.73 ft/sec)×(27 hours)×(0.68 sec•mile/hr•ft)

d=50 miles

Therefore, 50 miles downstream is the appropriate planning distance for this facility.

3.0 Oil Transport on Still Water

3.1 For bodies of water including lakes or ponds that do not have a measurable velocity, the spreading of the oil over the surface must be considered. Owners or operators of facilities located next to still water bodies may use a comparable means of calculating the planning distance. If a comparable formula is used, documentation of the reliability and analytical soundness of the comparable calculation must be attached to the response plan cover sheet.

3.2 *Example of the Planning Distance Calculation for Oil Transport on Still Water.* To assist those facilities which could potentially discharge into a still body of water, the following analysis was performed to provide an example of the type of formula that may be used to calculate the planning distance. For this example, a worst case discharge of 2,000,000 gallons is used.

(1) The surface area in square feet covered by an oil spill on still water, A1, can be determined by the following formula,[2] where V is the volume of the spill in gallons and C is a constant conversion factor:

$A_1=10^5\times V^{3/4}\times C$

C=0.1643

$A_1=10^5\times(2{,}000{,}000 \text{ gallons})^{3/4}\times(0.1643)$

$A_1=8.74\times 10^8$ ft^2

(2) The spreading formula is based on the theoretical condition that the oil will spread uniformly in all directions forming a circle. In reality, the outfall of the discharge will direct the oil to the surface of the water where it intersects the shoreline. Although the oil will not spread uniformly in all directions, it is assumed that the discharge will spread from the shoreline into a semi-circle (this assumption does not account for winds or wave action).

(3) The area of a circle=$\dagger r^2$

(4) To account for the assumption that oil will spread in a semi-circular shape, the area of a circle is divided by 2 and is designated as A_2.

$A_2=(\dagger r^2)/2$

Solving for the radius, r, using the relationship $A_1=A_2$: 8.74×10^8 ft$^2=(\dagger^2)/2$

Therefore, r=23,586 ft

r=23,586 ft÷5,280 ft/mile=4.5 miles

Assuming a 20 knot wind under storm conditions:

1 knot=1.15 miles/hour

20 knots×1.15 miles/hour/knot=23 miles/hr

Assuming that the oil slick moves at 3 percent of the wind's speed:[3]

23 miles/hour×0.03=0.69 miles/hour

(5) To estimate the distance that the oil will travel, use the times required for response resources to arrive at different geographic locations as shown in Table 3 of this attachment.

For example:

For Higher Volume Port Areas: 15 hrs×0.69 miles/hr=10.4 miles

For Great Lakes and all other areas: 27 hrs×0.69 miles/hr=18.6 miles

(6) The total distance that the oil will travel from the point of discharge, including the distance due to spreading, is calculated as follows:

Higher Volume Port Areas: d=10.4+4.5 miles or approximately 15 miles

Great Lakes and all other areas: d=18.6+4.5 miles or approximately 23 miles

4.0 Oil Transport on Tidal-Influence Areas

4.1 The planning distance method for tidal influence navigable water is based on worst case discharges of persistent and non-persistent oils. Persistent oils are of primary concern because they can potentially cause harm over a greater distance. For persistent oils discharged into tidal waters, the planning distance is 15 miles from the facility down current during ebb tide and to the point of maximum tidal influence or 15 miles, whichever is less, during flood tide.

4.2 For non-persistent oils discharged into tidal waters, the planning distance is 5 miles from the facility down current during ebb tide and to the point of maximum tidal influence or 5 miles, whichever is less, during flood tide.

[2] Huang, J.C. and Monastero, F.C., 1982. *Review of the State-of-the-Art of Oil Pollution Models.* Final report submitted to the American Petroleum Institute by Raytheon Ocean Systems, Co., East Providence, Rhode Island.

[3] *Oil Spill Prevention & Control.* National Spill Control School, Corpus Christi State University, Thirteenth Edition, May 1990.

4.3 *Example of Determining the Planning Distance for Two Types of Navigable Water Conditions.* Below is an example of how to determine the proper planning distance when a facility could impact two types of navigable water conditions: moving water and tidal water.

(1) Facility X stores persistent oil and is located downstream from locks along a slow moving river which is affected by tides. The river velocity, v, is determined to be 0.5 feet/second from the Chezy-Manning equation used to calculate oil transport on moving navigable waters. The specified time interval, t, obtained from Table 3 of this attachment for river areas is 27 hours. Therefore, solving for the planning distance, d:

d=v x t x c

d=(0.5 ft/sec) x (27 hours) x (0.68 sec•mile/hr•ft)

d=9.18 miles.

(2) However, the planning distance for maximum tidal influence down current during ebb tide is 15 miles, which is greater than the calculated 9.18 miles. Therefore, 15 miles downstream is the appropriate planning distance for this facility.

5.0 Oil Transport Over Land

5.1 Facility owners or operators must evaluate the potential for oil to be transported over land to navigable waters of the United States. The owner or operator must evaluate the likelihood that portions of a worst case discharge would reach navigable waters via open channel flow or from sheet flow across the land, or be prevented from reaching navigable waters when trapped in natural or man-made depressions excluding secondary containment structures.

5.2 As discharged oil travels over land, it may enter a storm drain or open concrete channel intended for drainage. It is assumed that once oil reaches such an inlet, it will flow into the receiving navigable water. During a storm event, it is highly probable that the oil will either flow into the drainage structures or follow the natural contours of the land and flow into the navigable water. Expected minimum and maximum velocities are provided as examples of open concrete channel and pipe flow. The ranges listed below reflect minimum and maximum velocities used as design criteria.[4] The calculation below demonstrates that the time required for oil to travel through a storm drain or open concrete channel to navigable water is negligible and can be considered instantaneous. The velocities are:

For open concrete channels:

maximum velocity=25 feet per second

minimum velocity=3 feet per second

For storm drains:

maximum velocity=25 feet per second

minimum velocity=2 feet per second

5.3 Assuming a length of 0.5 mile from the point of discharge through an open concrete channel or concrete storm drain to a navigable water, the travel times (distance/velocity) are:

1.8 minutes at a velocity of 25 feet per second

14.7 minutes at a velocity of 3 feet per second

22.0 minutes for at a velocity of 2 feet per second

5.4 The distances that shall be considered to determine the planning distance are illustrated in Figure C-I of this attachment. The relevant distances can be described as follows:

D1=Distance from the nearest opportunity for discharge, X_1, to a storm drain or an open concrete channel leading to navigable water.

D2=Distance through the storm drain or open concrete channel to navigable water.

D3=Distance downstream from the outfall within which fish and wildlife and sensitive environments could be injured or a public drinking water intake would be shut down as determined by the planning distance formula.

D4=Distance from the nearest opportunity for discharge, X_2, to fish and wildlife and sensitive environments not bordering navigable water.

5.5 A facility owner or operator whose nearest opportunity for discharge is located within 0.5 mile of a navigable water must complete the planning distance calculation (D3) for the type of navigable water near the facility or use a comparable formula.

5.6 A facility that is located at a distance greater than 0.5 mile from a navigable water must also calculate a planning distance (D3) if it is in close proximity (i.e., D1 is less than 0.5 mile and other factors are conducive to oil travel over land) to storm drains that flow to navigable waters. Factors to be considered in assessing oil transport over land to storm drains shall include the topography of the surrounding area, drainage patterns, man-made barriers (excluding secondary containment structures), and soil distribution and porosity. Storm drains or concrete drainage channels that are located in close proximity to the facility can provide a direct pathway to navigable waters, regardless of the length of the drainage pipe. If D1 is less than or equal to 0.5 mile, a discharge from the facility could pose substantial harm because the time to travel the distance from the storm drain to the navigable water (D2) is virtually instantaneous.

[4] The design velocities were obtained from Howard County, Maryland Department of Public Works' Storm Drainage Design Manual.

5.7 A facility's proximity to fish and wildlife and sensitive environments not bordering a navigable water, as depicted as D4 in Figure C–I of this attachment, must also be considered, regardless of the distance from the facility to navigable waters. Factors to be considered in assessing oil transport over land to fish and wildlife and sensitive environments should include the topography of the surrounding area, drainage patterns, man-made barriers (excluding secondary containment structures), and soil distribution and porosity.

5.8 If a facility is not found to pose substantial harm to fish and wildlife and sensitive environments not bordering navigable waters via oil transport on land, then supporting documentation should be maintained at the facility. However, such documentation should be submitted with the response plan if a facility is found to pose substantial harm.

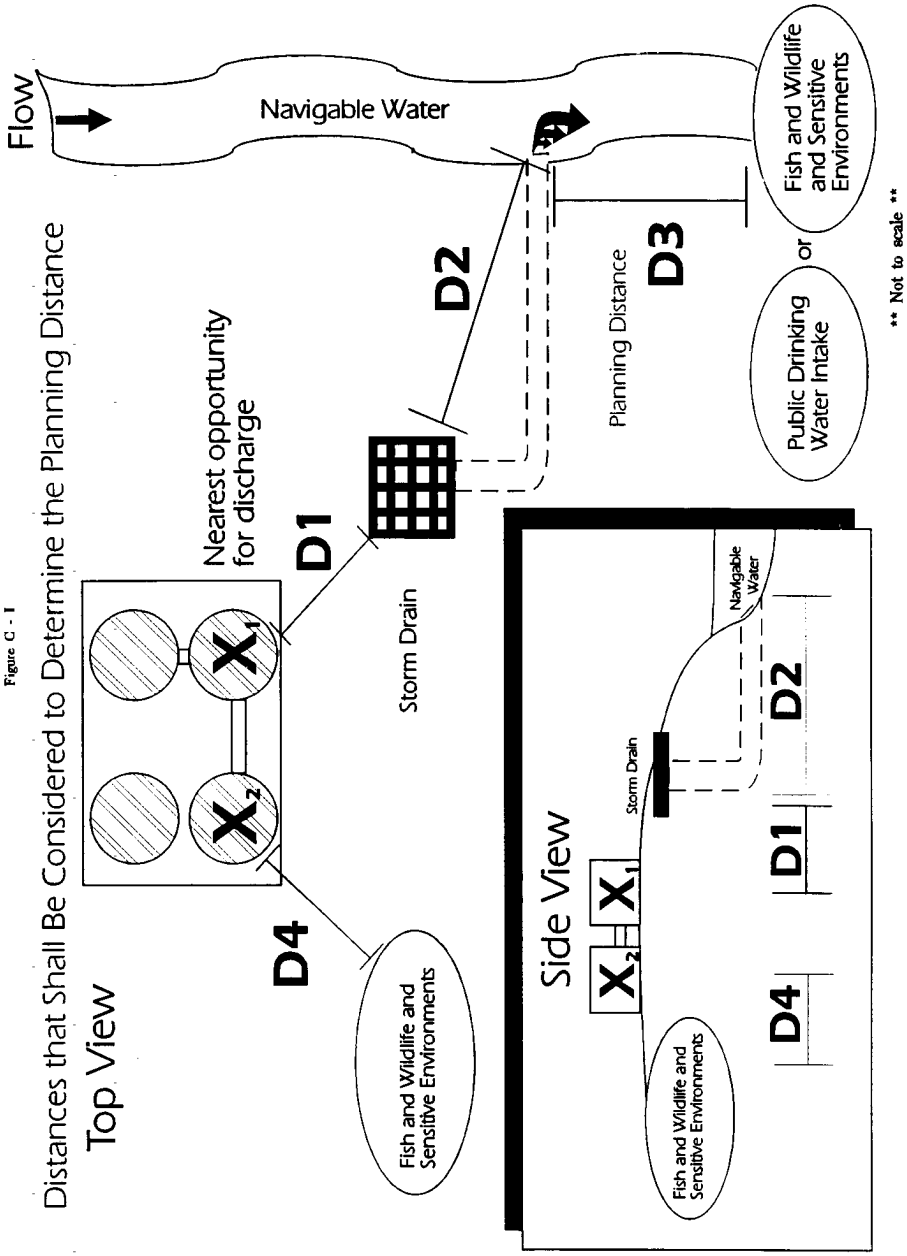

Figure C - 1

[59 FR 34102, July 1, 1994]

APPENDIX D TO PART 112—DETERMINATION OF A WORST CASE DISCHARGE PLANNING VOLUME

1.0 Instructions

1.1 An owner or operator is required to complete this worksheet if the facility meets the criteria, as presented in Appendix C to this part, or it is determined by the RA that the facility could cause substantial harm to the environment. The calculation of a worst case discharge planning volume is used for emergency planning purposes, and is required in 40 CFR 112.20 for facility owners or operators who must prepare a response plan. When planning for the amount of resources and equipment necessary to respond to the worst case discharge planning volume, adverse weather conditions must be taken into consideration. An owner or operator is required to determine the facility's worst case discharge planning volume from either Part A of this appendix for an onshore storage facility, or Part B of this appendix for an onshore production facility. The worksheet considers the provision of adequate secondary containment at a facility.

1.2 For onshore storage facilities and production facilities, permanently manifolded oil storage tanks are defined as tanks that are designed, installed, and/or operated in such a manner that the multiple tanks function as one storage unit (i.e., multiple tank volumes are equalized). In a worst case discharge scenario, a single failure could cause the discharge of the contents of more than one tank. The owner or operator must provide evidence in the response plan that tanks with common piping or piping systems are not operated as one unit. If such evidence is provided and is acceptable to the RA, the worst case discharge planning volume would be based on the capacity of the largest oil storage tank within a common secondary containment area or the largest oil storage tank within a single secondary containment area, whichever is greater. For permanently manifolded tanks that function as one oil storage unit, the worst case discharge planning volume would be based on the combined oil storage capacity of all manifolded tanks or the capacity of the largest single oil storage tank within a secondary containment area, whichever is greater. For purposes of this rule, permanently manifolded tanks that are separated by internal divisions for each tank are considered to be single tanks and individual manifolded tank volumes are not combined.

1.3 For production facilities, the presence of exploratory wells, production wells, and oil storage tanks must be considered in the calculation. Part B of this appendix takes these additional factors into consideration and provides steps for their inclusion in the total worst case discharge planning volume. Onshore oil production facilities may include all wells, flowlines, separation equipment, storage facilities, gathering lines, and auxiliary non-transportation-related equipment and facilities in a single geographical oil or gas field operated by a single operator. Although a potential worst case discharge planning volume is calculated within each section of the worksheet, the final worst case amount depends on the risk parameter that results in the greatest volume.

1.4 Marine transportation-related transfer facilities that contain fixed aboveground onshore structures used for bulk oil storage are jointly regulated by EPA and the U.S. Coast Guard (USCG), and are termed ''complexes.'' Because the USCG also requires response plans from transportation-related facilities to address a worst case discharge of oil, a separate calculation for the worst case discharge planning volume for USCG-related facilities is included in the USCG IFR (see Appendix E to this part, section 10, for availability). All complexes that are jointly regulated by EPA and the USCG must compare both calculations for worst case discharge planning volume derived by using the EPA and USCG methodologies and plan for whichever volume is greater.

PART A: WORST CASE DISCHARGE PLANNING VOLUME CALCULATION FOR ONSHORE STORAGE FACILITIES[1]

Part A of this worksheet is to be completed by the owner or operator of an SPCC-regulated facility (excluding oil production facilities) if the facility meets the criteria as presented in Appendix C to this part, or if it is determined by the RA that the facility could cause substantial harm to the environment. If you are the owner or operator of a production facility, please proceed to Part B of this worksheet.

A.1 SINGLE-TANK FACILITIES

For facilities containing only one aboveground oil storage tank, the worst case discharge planning volume equals the capacity of the oil storage tank. If adequate secondary containment (sufficiently large to contain the capacity of the aboveground oil storage tank plus sufficient freeboard to allow for precipitation) exists for the oil storage tank, multiply the capacity of the tank by 0.8.

(1) FINAL WORST CASE VOLUME: _____ GAL

(2) Do not proceed further.

[1] ''Storage facilities'' represent all facilities subject to this part, excluding oil production facilities.

A.2 SECONDARY CONTAINMENT—MULTIPLE-TANK FACILITIES

Are *all* aboveground oil storage tanks or groups of aboveground oil storage tanks at the facility *without* adequate secondary containment?[2]

_____ (Y/N)

A.2.1 If the answer is yes, the final worst case discharge planning volume equals the *total aboveground oil storage capacity at the facility*.

(1) FINAL WORST CASE VOLUME: _____ GAL

(2) Do not proceed further.

A.2.2 If the answer is no, calculate the total aboveground oil storage capacity of tanks without adequate secondary containment. If *all* aboveground oil storage tanks or groups of aboveground oil storage tanks at the facility have adequate secondary containment, ENTER ''0'' (zero).

_____ GAL

A.2.3 Calculate the capacity of the largest single aboveground oil storage tank within an adequate secondary containment area or the combined capacity of a group of aboveground oil storage tanks permanently manifolded together, whichever is greater, PLUS THE VOLUME FROM QUESTION A.2.2.

FINAL WORST CASE VOLUME:[3] _____ GAL

PART B: WORST CASE DISCHARGE PLANNING VOLUME CALCULATION FOR ONSHORE PRODUCTION FACILITIES

Part B of this worksheet is to be completed by the owner or operator of an SPCC-regulated oil production facility if the facility meets the criteria presented in Appendix C to this part, or if it is determined by the RA that the facility could cause substantial harm. A production facility consists of all wells (producing and exploratory) and related equipment in a single geographical oil or gas field operated by a single operator.

B.1 SINGLE-TANK FACILITIES

B.1.1 For facilities containing only one aboveground oil storage tank, the worst case discharge planning volume equals the capacity of the aboveground oil storage tank plus the production volume of the well with the highest output at the facility. If adequate secondary containment (sufficiently large to contain the capacity of the aboveground oil storage tank plus sufficient freeboard to allow for precipitation) exists for the storage tank, multiply the capacity of the tank by 0.8.

B.1.2 For facilities with production wells producing by pumping, if the rate of the well with the highest output is known and the number of days the facility is unattended can be predicted, then the production volume is equal to the pumping rate of the well multiplied by the greatest number of days the facility is unattended.

B.1.3 If the pumping rate of the well with the highest output is estimated or the maximum number of days the facility is unattended is estimated, then the production volume is determined from the pumping rate of the well multiplied by 1.5 times the greatest number of days that the facility has been or is expected to be unattended.

B.1.4 Attachment D–1 to this appendix provides methods for calculating the production volume for exploratory wells and production wells producing under pressure.

(1) FINAL WORST CASE VOLUME: _____ GAL

(2) Do not proceed further.

B.2 SECONDARY CONTAINMENT—MULTIPLE-TANK FACILITIES

Are *all* aboveground oil storage tanks or groups of aboveground oil storage tanks at the facility *without* adequate secondary containment?

_____ (Y/N)

B.2.1 If the answer is yes, the final worst case volume equals the total aboveground oil storage capacity without adequate secondary containment plus the production volume of the well with the highest output at the facility.

(1) For facilities with production wells producing by pumping, if the rate of the well with the highest output is known and the number of days the facility is unattended can be predicted, then the production volume is equal to the pumping rate of the well multiplied by the greatest number of days the facility is unattended.

(2) If the pumping rate of the well with the highest output is estimated or the maximum number of days the facility is unattended is estimated, then the production volume is determined from the pumping rate of the well multiplied by 1.5 times the greatest number of days that the facility has been or is expected to be unattended.

(3) Attachment D–1 to this appendix provides methods for calculating the production volumes for exploratory wells and production wells producing under pressure.

(A) FINAL WORST CASE VOLUME: _____ GAL

(B) Do not proceed further.

[2] Secondary containment is defined in 40 CFR 112.7(e)(2). Acceptable methods and structures for containment are also given in 40 CFR 112.7(c)(1).

[3] All complexes that are jointly regulated by EPA and the USCG must also calculate the worst case discharge planning volume for the transportation-related portions of the facility and plan for whichever volume is greater.

B.2.2 If the answer is no, calculate the total aboveground oil storage capacity of tanks without adequate secondary containment. If *all* aboveground oil storage tanks or groups of aboveground oil storage tanks at the facility have adequate secondary containment, ENTER ''0'' (zero).

_____ GAL

B.2.3 Calculate the capacity of the largest single aboveground oil storage tank within an adequate secondary containment area or the combined capacity of a group of aboveground oil storage tanks permanently manifolded together, whichever is greater, plus the production volume of the well with the highest output, PLUS THE VOLUME FROM QUESTION B.2.2. Attachment D–1 provides methods for calculating the production volumes for exploratory wells and production wells producing under pressure.

(1) FINAL WORST CASE VOLUME:[4]

_____ GAL

(2) Do not proceed further.

ATTACHMENTS TO APPENDIX D

ATTACHMENT D–I—METHODS TO CALCULATE PRODUCTION VOLUMES FOR PRODUCTION FACILITIES WITH EXPLORATORY WELLS OR PRODUCTION WELLS PRODUCING UNDER PRESSURE

1.0 Introduction

The owner or operator of a production facility with exploratory wells or production wells producing under pressure shall compare the well rate of the highest output well (rate of well), in barrels per day, to the ability of response equipment and personnel to recover the volume of oil that could be discharged (rate of recovery), in barrels per day. The result of this comparison will determine the method used to calculate the production volume for the production facility. This production volume is to be used to calculate the worst case discharge planning volume in Part B of this appendix.

2.0 Description of Methods

2.1 Method A

If the well rate would overwhelm the response efforts (i.e., rate of well/rate of recovery ≥ 1), then the production volume would be the 30-day forecasted well rate for a well 10,000 feet deep or less, or the 45-day forecasted well rate for a well deeper than 10,000 feet.

(1) For wells 10,000 feet deep or less:

Production volume=30 days × rate of well.

(2) For wells deeper than 10,000 feet:

Production volume=45 days × rate of well.

2.2 Method B

2.2.1 If the rate of recovery would be greater than the well rate (i.e., rate of well/rate of recovery <1), then the production volume would equal the sum of two terms:

Production volume=discharge $volume_1$ + discharge $volume_2$

2.2.2 The first term represents the volume of the oil discharged from the well between the time of the blowout and the time the response resources are on scene and recovering oil (discharge $volume_1$).

Discharge $volume_1$=(days unattended+days to respond) × (rate of well)

2.2.3 The second term represents the volume of oil discharged from the well after the response resources begin operating until the spill is stopped, adjusted for the recovery rate of the response resources (discharge $volume_2$).

(1) For wells 10,000 feet deep or less:

Discharge $volume_2$=[30 days − (days unattended + days to respond)] × (rate of well) × (rate of well/rate of recovery)

(2) For wells deeper than 10,000 feet:

Discharge $volume_2$=[45 days − (days unattended + days to respond)] × (rate of well) × (rate of well/rate of recovery)

3.0 Example

3.1 A facility consists of two production wells producing under pressure, which are both less than 10,000 feet deep. The well rate of well A is 5 barrels per day, and the well rate of well B is 10 barrels per day. The facility is unattended for a maximum of 7 days. The facility operator estimates that it will take 2 days to have response equipment and personnel on scene and responding to a blowout, and that the projected rate of recovery will be 20 barrels per day.

(1) First, the facility operator determines that the highest output well is well B. The facility operator calculates the ratio of the rate of well to the rate of recovery:

10 barrels per day/20 barrels per day=0.5 Because the ratio is less than one, the facility operator will use Method B to calculate the production volume.

(2) The first term of the equation is:

Discharge $volume_1$=(7 days + 2 days) × (10 barrels per day)=90 barrels

(3) The second term of the equation is:

Discharge $volume_2$=[30 days—(7 days + 2 days)] × (10 barrels per day) × (0.5)=105 barrels

(4) Therefore, the production volume is:

Production volume=90 barrels + 105 barrels=195 barrels

3.2 If the recovery rate was 5 barrels per day, the ratio of rate of well to rate of recovery would be 2, so the facility operator would

[4] All complexes that are jointly regulated by EPA and the USCG must also calculate the worst case discharge planning volume for the transportation-related portions of the facility and plan for whichever volume is greater.

use Method A. The production volume would have been:

30 days × 10 barrels per day=300 barrels

[59 FR 34110, July 1, 1994; 59 FR 49006, Sept. 26, 1994]

APPENDIX E TO PART 112—DETERMINATION AND EVALUATION OF REQUIRED RESPONSE RESOURCES FOR FACILITY RESPONSE PLANS

1.0 Purpose and Definitions

1.1 The purpose of this appendix is to describe the procedures to identify response resources to meet the requirements of § 112.20. To identify response resources to meet the facility response plan requirements of 40 CFR 112.20(h), owners or operators shall follow this appendix or, where not appropriate, shall clearly demonstrate in the response plan why use of this appendix is not appropriate at the facility and make comparable arrangements for response resources.

1.2 Definitions.

1.2.1 *Nearshore* is an operating area defined as extending seaward 12 miles from the boundary lines defined in 46 CFR part 7, except in the Gulf of Mexico. In the Gulf of Mexico, it means the area extending 12 miles from the line of demarcation (COLREG lines) defined in 49 CFR 80.740 and 80.850.

1.2.2 *Non-persistent oils* or *Group 1 oils* include:

(1) A petroleum-based oil that, at the time of shipment, consists of hydrocarbon fractions:

(A) At least 50 percent of which by volume, distill at a temperature of 340 degrees C (645 degrees F); and

(B) At least 95 percent of which by volume, distill at a temperature of 370 degrees C (700 degrees F); and

(2) A non-petroleum oil with a specific gravity less than 0.8.

1.2.3 *Non-petroleum oil* is oil of any kind that is not petroleum-based. It includes, but is not limited to, animal and vegetable oils.

1.2.4 *Ocean* means the nearshore area.

1.2.5 *Operating area* means Rivers and Canals, Inland, Nearshore, and Great Lakes geographic location(s) in which a facility is handling, storing, or transporting oil.

1.2.6 *Operating environment* means Rivers and Canals, Inland, Great Lakes, or Ocean. These terms are used to define the conditions in which response equipment is designed to function.

1.2.7 *Persistent oils* include:

(1) A petroleum-based oil that does not meet the distillation criteria for a non-persistent oil. Persistent oils are further classified based on specific gravity as follows:

(A) Group 2—specific gravity less than 0.85;

(B) Group 3—specific gravity equal to or greater than 0.85 and less than 0.95;

(C) Group 4—specific gravity equal to or greater than 0.95 and less than 1.0; or

(D) Group 5—specific gravity equal to or greater than 1.0.

(2) A non-petroleum oil with a specific gravity of 0.8 or greater. These oils are further classified based on specific gravity as follows:

(A) Group 2—specific gravity equal to or greater than 0.8 and less than 0.85;

(B) Group 3—specific gravity equal to or greater than 0.85 and less than 0.95;

(C) Group 4—specific gravity equal to or greater than 0.95 and less than 1.0; or

(D) Group 5—specific gravity equal to or greater than 1.0.

1.2.8 Other definitions are included in § 112.2 and section 1.1 of Appendix C.

2.0 Equipment Operability and Readiness

2.1 All equipment identified in a response plan must be designed to operate in the conditions expected in the facility's geographic area (i.e., operating environment). These conditions vary widely based on location and season. Therefore, it is difficult to identify a single stockpile of response equipment that will function effectively in each geographic location (i.e., operating area).

2.2 Facilities handling, storing, or transporting oil in more than one operating environment as indicated in Table 1 of this appendix must identify equipment capable of successfully functioning in each operating environment.

2.3 When identifying equipment for the response plan (based on the use of this appendix), a facility owner or operator must consider the inherent limitations of the operability of equipment components and response systems. The criteria in Table 1 of this appendix shall be used to evaluate the operability in a given environment. These criteria reflect the general conditions in certain operating environments.

2.3.1 The Regional Administrator may require documentation that the boom identified in a facility response plan meets the criteria in Table 1 of this appendix. Absent acceptable documentation, the Regional Administrator may require that the boom be tested to demonstrate that it meets the criteria in Table 1 of this appendix. Testing must be in accordance with ASTM F 715, ASTM F 989, or other tests approved by EPA as deemed appropriate (see Appendix E to this part, section 10, for general availability of documents).

2.4 Table 1 of this appendix lists criteria for oil recovery devices and boom. All other equipment necessary to sustain or support response operations in an operating environment must be designed to function in the same conditions. For example, boats that deploy or support skimmers or boom must be

capable of being safely operated in the significant wave heights listed for the applicable operating environment.

2.5 A facility owner or operator shall refer to the applicable Area Contingency Plan (ACP), where available, to determine if ice, debris, and weather-related visibility are significant factors to evaluate the operability of equipment. The ACP may also identify the average temperature ranges expected in the facility's operating area. All equipment identified in a response plan must be designed to operate within those conditions or ranges.

2.6 This appendix provides information on response resource mobilization and response times. The distance of the facility from the storage location of the response resources must be used to determine whether the resources can arrive on-scene within the stated time. A facility owner or operator shall include the time for notification, mobilization, and travel of resources identified to meet the medium and Tier 1 worst case discharge requirements identified in section 4.3 of this appendix (for medium discharges) and section 5.3 of this appendix (for worst case discharges). The facility owner or operator must plan for notification and mobilization of Tier 2 and 3 response resources as necessary to meet the requirements for arrival on-scene in accordance with section 5.3 of this appendix. An on-water speed of 5 knots and a land speed of 35 miles per hour is assumed, unless the facility owner or operator can demonstrate otherwise.

2.7 In identifying equipment, the facility owner or operator shall list the storage location, quantity, and manufacturer's make and model. For oil recovery devices, the effective daily recovery capacity, as determined using section 6 of this appendix, must be included. For boom, the overall boom height (draft and freeboard) shall be included. A facility owner or operator is responsible for ensuring that the identified boom has compatible connectors.

3.0 Determining Response Resources Required for Small Discharges

3.1 A facility owner or operator shall identify sufficient response resources available, by contract or other approved means as described in §112.2, to respond to a small discharge. A small discharge is defined as any discharge volume less than or equal to 2,100 gallons, but not to exceed the calculated worst case discharge. The equipment must be designed to function in the operating environment at the point of expected use.

3.2 Complexes that are regulated by EPA and the USCG must also consider planning quantities for the transportation-related transfer portion of the facility. The USCG planning level that corresponds to EPA's ''small discharge'' is termed ''the average most probable discharge.'' The USCG revisions to 33 CFR part 154 define ''the average most probable discharge'' as a discharge of 50 barrels (2,100 gallons). Owners or operators of complexes must compare oil spill volumes for a small discharge and an average most probable discharge and plan for whichever quantity is greater.

3.3 The response resources shall, as appropriate, include:

3.3.1 One thousand feet of containment boom (or, for complexes with marine transfer components, 1,000 feet of containment boom or two times the length of the largest vessel that regularly conducts oil transfers to or from the facility, whichever is greater), and a means of deploying it within 1 hour of the discovery of a spill;

3.3.2 Oil recovery devices with an effective daily recovery capacity equal to the amount of oil discharged in a small discharge or greater which is available at the facility within 2 hours of the detection of an oil discharge; and

3.3.3 Oil storage capacity for recovered oily material indicated in section 9.2 of this appendix.

4.0 Determining Response Resources Required for Medium Discharges

4.1 A facility owner or operator shall identify sufficient response resources available, by contract or other approved means as described in §112.2, to respond to a medium discharge of oil for that facility. This will require response resources capable of containing and collecting up to 36,000 gallons of oil or 10 percent of the worst case discharge, whichever is less. All equipment identified must be designed to operate in the applicable operating environment specified in Table 1 of this appendix.

4.2 Complexes that are regulated by EPA and the USCG must also consider planning quantities for the transportation-related transfer portion of the facility. The USCG planning level that corresponds to EPA's ''medium discharge'' is termed ''the maximum most probable discharge.'' The USCG revisions to 33 CFR part 154 define ''the maximum most probable discharge'' as a discharge of 1,200 barrels (50,400 gallons) or 10 percent of the worst case discharge, whichever is less. Owners or operators of complexes must compare spill volumes for a medium discharge and a maximum most probable discharge and plan for whichever quantity is greater.

4.3 Oil recovery devices identified to meet the applicable medium discharge volume planning criteria must be located such that they are capable of arriving on-scene within 6 hours in higher volume port areas and the Great Lakes and within 12 hours in all other areas. Higher volume port areas and Great Lakes areas are defined in section 1.1 of Appendix C to this part.

4.4 Because rapid control, containment, and removal of oil are critical to reduce spill

impact, the owner or operator must determine response resources using an effective daily recovery capacity for oil recovery devices equal to 50 percent of the planning volume applicable for the facility as determined in section 4.1 of this appendix. The effective daily recovery capacity for oil recovery devices identified in the plan must be determined using the criteria in section 6 of this appendix.

4.5 In addition to oil recovery capacity, the plan shall, as appropriate, identify sufficient quantity of containment boom available, by contract or other approved means as described in §112.2, to arrive within the required response times for oil collection and containment and for protection of fish and wildlife and sensitive environments. For further description of fish and wildlife and sensitive environments, see Appendices I, II, and III to DOC/NOAA's ''Guidance for Facility and Vessel Response Plans: Fish and Wildlife and Sensitive Environments'' (see Appendix E to this part, section 10, for availability) and the applicable ACP. While the regulation does not set required quantities of boom for oil collection and containment, the response plan shall identify and ensure, by contract or other approved means as described in §112.2, the availability of the quantity of boom identified in the plan for this purpose.

4.6 The plan must indicate the availability of temporary storage capacity to meet section 9.2 of this appendix. If available storage capacity is insufficient to meet this level, then the effective daily recovery capacity must be derated (downgraded) to the limits of the available storage capacity.

4.7 The following is an example of a medium discharge volume planning calculation for equipment identification in a higher volume port area: The facility's largest aboveground storage tank volume is 840,000 gallons. Ten percent of this capacity is 84,000 gallons. Because 10 percent of the facility's largest tank, or 84,000 gallons, is greater than 36,000 gallons, 36,000 gallons is used as the planning volume. The effective daily recovery capacity is 50 percent of the planning volume, or 18,000 gallons per day. The ability of oil recovery devices to meet this capacity must be calculated using the procedures in section 6 of this appendix. Temporary storage capacity available on-scene must equal twice the daily recovery capacity as indicated in section 9.2 of this appendix, or 36,000 gallons per day. This is the information the facility owner or operator must use to identify and ensure the availability of the required response resources, by contract or other approved means as described in §112.2. The facility owner shall also identify how much boom is available for use.

5.0 Determining Response Resources Required for the Worst Case Discharge to the Maximum Extent Practicable

5.1 A facility owner or operator shall identify and ensure the availability of, by contract or other approved means as described in §112.2, sufficient response resources to respond to the worst case discharge of oil to the maximum extent practicable. Section 7 of this appendix describes the method to determine the necessary response resources. A worksheet is provided as Attachment E–1 at the end of this appendix to simplify the procedures involved in calculating the planning volume for response resources for the worst case discharge.

5.2 Complexes that are regulated by EPA and the USCG must also consider planning for the worst case discharge at the transportation-related portion of the facility. The USCG requires that transportation-related facility owners or operators use a different calculation for the worst case discharge in the revisions to 33 CFR part 154. Owners or operators of complex facilities that are regulated by EPA and the USCG must compare both calculations of worst case discharge derived by EPA and the USCG and plan for whichever volume is greater.

5.3 Oil spill response resources identified in the response plan and available, by contract or other approved means as described in §112.2, to meet the applicable worst case discharge planning volume must be located such that they are capable of arriving at the scene of a discharge within the times specified for the applicable response tier listed below:

	Tier 1	Tier 2	Tier 3
Higher volume port areas.	6 hrs	30 hrs	54 hrs
Great Lakes ..	12 hrs	36 hrs	60 hrs
All other river and canal, inland, and nearshore areas.	12 hrs	36 hrs	60 hrs

The three levels of response tiers apply to the amount of time in which facility owners or operators must plan for response resources to arrive at the scene of a spill to respond to the worst case discharge planning volume. For example, at a worst case discharge in an inland area, the first tier of response resources (i.e., that amount of on-water and shoreline cleanup capacity necessary to respond to the fraction of the worst case discharge as indicated through the series of steps described in sections 7.2 and 7.3 of this appendix) would arrive at the scene of the discharge within 12 hours; the second tier of response resources would arrive within 36 hours; and the third tier of response resources would arrive within 60 hours.

5.4 The effective daily recovery capacity for oil recovery devices identified in the response plan must be determined using the criteria in section 6 of this appendix. A facility owner or operator shall identify the storage locations of all response resources used for each tier. The owner or operator of a facility whose required daily recovery capacity exceeds the applicable contracting caps in Table 5 of this appendix shall, as appropriate, identify sources of additional equipment, their location, and the arrangements made to obtain this equipment during a response. The owner or operator of a facility whose calculated planning volume exceeds the applicable contracting caps in Table 5 of this appendix shall, as appropriate, identify sources of additional equipment equal to twice the cap listed in Tier 3 or the amount necessary to reach the calculated planning volume, whichever is lower. The resources identified above the cap shall be capable of arriving on-scene not later than the Tier 3 response times in section 5.3 of this appendix. No contract is required. While general listings of available response equipment may be used to identify additional sources (i.e., ''public'' resources vs. ''private'' resources), the response plan shall identify the specific sources, locations, and quantities of equipment that a facility owner or operator has considered in his or her planning. When listing USCG-classified oil spill removal organization(s) that have sufficient removal capacity to recover the volume above the response capacity cap for the specific facility, as specified in Table 5 of this appendix, it is not necessary to list specific quantities of equipment.

5.5 A facility owner or operator shall identify the availability of temporary storage capacity to meet section 9.2 of this appendix. If available storage capacity is insufficient, then the effective daily recovery capacity must be derated (downgraded) to the limits of the available storage capacity.

5.6 When selecting response resources necessary to meet the response plan requirements, the facility owner or operator shall, as appropriate, ensure that a portion of those resources is capable of being used in close-to-shore response activities in shallow water. For any EPA-regulated facility that is required to plan for response in shallow water, at least 20 percent of the on-water response equipment identified for the applicable operating area shall, as appropriate, be capable of operating in water of 6 feet or less depth.

5.7 In addition to oil spill recovery devices, a facility owner or operator shall identify sufficient quantities of boom that are available, by contract or other approved means as described in §112.2, to arrive on-scene within the specified response times for oil containment and collection. The specific quantity of boom required for collection and containment will depend on the facility-specific information and response strategies employed. A facility owner or operator shall, as appropriate, also identify sufficient quantities of oil containment boom to protect fish and wildlife and sensitive environments. For further description of fish and wildlife and sensitive environments, see Appendices I, II, and III to DOC/NOAA's ''Guidance for Facility and Vessel Response Plans: Fish and Wildlife and Sensitive Environments'' (see Appendix E to this part, section 10, for availability), and the applicable ACP. Refer to this guidance document for the number of days and geographic areas (i.e., operating environments) specified in Table 2 of this appendix.

5.8 A facility owner or operator shall also identify, by contract or other approved means as described in §112.2, the availability of an oil spill removal organization(s) (as described in §112.2) capable of responding to a shoreline cleanup operation involving the calculated volume of oil and emulsified oil that might impact the affected shoreline. The volume of oil that shall, as appropriate, be planned for is calculated through the application of factors contained in Tables 2 and 3 of this appendix. The volume calculated from these tables is intended to assist the facility owner or operator to identify an oil spill removal organization with sufficient resources and expertise.

6.0 Determining Effective Daily Recovery Capacity for Oil Recovery Devices

6.1 Oil recovery devices identified by a facility owner or operator must be identified by the manufacturer, model, and effective daily recovery capacity. These capacities must be used to determine whether there is sufficient capacity to meet the applicable planning criteria for a small discharge, a medium discharge, and a worst case discharge to the maximum extent practicable.

6.2 To determine the effective daily recovery capacity of oil recovery devices, the formula listed in section 6.2.1 of this appendix shall be used. This formula considers potential limitations due to available daylight, weather, sea state, and percentage of emulsified oil in the recovered material. The RA may assign a lower efficiency factor to equipment listed in a response plan if it is determined that such a reduction is warranted.

6.2.1 The following formula shall be used to calculate the effective daily recovery capacity:

$$R = T \times 24 \text{ hours} \times E$$

where:

R—Effective daily recovery capacity;

T—Throughput rate in barrels per hour (nameplate capacity); and

E—20 percent efficiency factor (or lower factor as determined by the Regional Administrator).

6.2.2 For those devices in which the pump limits the throughput of liquid, throughput rate shall be calculated using the pump capacity.

6.2.3 For belt or moptype devices, the throughput rate shall be calculated using the speed of the belt or mop through the device, assumed thickness of oil adhering to or collected by the device, and surface area of the belt or mop. For purposes of this calculation, the assumed thickness of oil will be ¼ inch.

6.2.4 Facility owners or operators that include oil recovery devices whose throughput is not measurable using a pump capacity or belt/mop speed may provide information to support an alternative method of calculation. This information must be submitted following the procedures in section 6.3.2 of this appendix.

6.3 As an alternative to section 6.2 of this appendix, a facility owner or operator may submit adequate evidence that a different effective daily recovery capacity should be applied for a specific oil recovery device. Adequate evidence is actual verified performance data in spill conditions or tests using American Society of Testing and Materials (ASTM) Standard F 631–80, F 808–83 (1988), or an equivalent test approved by EPA as deemed appropriate (see Appendix E to this part, section 10, for general availability of documents).

6.3.1 The following formula must be used to calculate the effective daily recovery capacity under this alternative:

$R = D \times U$

where:

R—Effective daily recovery capacity;

D—Average Oil Recovery Rate in barrels per hour (Item 26 in F 808–83; Item 13.1.15 in F 631–80; or actual performance data); and

U—Hours per day that equipment can operate under spill conditions. Ten hours per day must be used unless a facility owner or operator can demonstrate that the recovery operation can be sustained for longer periods.

6.3.2 A facility owner or operator submitting a response plan shall provide data that supports the effective daily recovery capacities for the oil recovery devices listed. The following is an example of these calculations:

(1) A weir skimmer identified in a response plan has a manufacturer's rated throughput at the pump of 267 gallons per minute (gpm).

267 gpm=381 barrels per hour (bph)

R=381 bph×24 hr/day×0.2=1,829 barrels per day

(2) After testing using ASTM procedures, the skimmer's oil recovery rate is determined to be 220 gpm. The facility owner or operator identifies sufficient resources available to support operations for 12 hours per day.

220 gpm=314 bph

R=314 bph×12 hr/day=3,768 barrels per day

(3) The facility owner or operator will be able to use the higher capacity if sufficient temporary oil storage capacity is available. Determination of alternative efficiency factors under section 6.2 of this appendix or the acceptability of an alternative effective daily recovery capacity under section 6.3 of this appendix will be made by the Regional Administrator as deemed appropriate.

7.0 Calculating Planning Volumes for a Worst Case Discharge

7.1 A facility owner or operator shall plan for a response to the facility's worst case discharge. The planning for on-water oil recovery must take into account a loss of some oil to the environment due to evaporative and natural dissipation, potential increases in volume due to emulsification, and the potential for deposition of oil on the shoreline. The procedures for non-petroleum oils are discussed in section 7.7 of this appendix.

7.2 The following procedures must be used by a facility owner or operator in determining the required on-water oil recovery capacity:

7.2.1 The following must be determined: the worst case discharge volume of oil in the facility; the appropriate group(s) for the types of oil handled, stored, or transported at the facility [persistent (Groups 2, 3, 4, 5) or non-persistent (Group 1)]; and the facility's specific operating area. See sections 1.2.2 and 1.2.7 of this appendix for the definitions of non-persistent and persistent oils, respectively. Facilities that handle, store, or transport oil from different oil groups must calculate each group separately, unless the oil group constitutes 10 percent or less by volume of the facility's total oil storage capacity. This information is to be used with Table 2 of this appendix to determine the percentages of the total volume to be used for removal capacity planning. Table 2 of this appendix divides the volume into three categories: oil lost to the environment; oil deposited on the shoreline; and oil available for on-water recovery.

7.2.2 The on-water oil recovery volume shall, as appropriate, be adjusted using the appropriate emulsification factor found in Table 3 of this appendix. Facilities that handle, store, or transport oil from different petroleum groups must compare the on-water recovery volume for each oil group (unless the oil group constitutes 10 percent or less by volume of the facility's total storage capacity) and use the calculation that results in the largest on-water oil recovery volume to plan for the amount of response resources for a worst case discharge.

7.2.3 The adjusted volume is multiplied by the on-water oil recovery resource mobilization factor found in Table 4 of this appendix from the appropriate operating area and response tier to determine the total on-water oil recovery capacity in barrels per day that must be identified or contracted to arrive on-scene within the applicable time for each response tier. Three tiers are specified. For higher volume port areas, the contracted tiers of resources must be located such that they are capable of arriving on-scene within 6 hours for Tier 1, 30 hours for Tier 2, and 54 hours for Tier 3 of the discovery of an oil discharge. For all other rivers and canals, inland, nearshore areas, and the Great Lakes, these tiers are 12, 36, and 60 hours.

7.2.4 The resulting on-water oil recovery capacity in barrels per day for each tier is used to identify response resources necessary to sustain operations in the applicable operating area. The equipment shall be capable of sustaining operations for the time period specified in Table 2 of this appendix. The facility owner or operator shall identify and ensure the availability, by contract or other approved means as described in §112.2, of sufficient oil spill recovery devices to provide the effective daily oil recovery capacity required. If the required capacity exceeds the applicable cap specified in Table 5 of this appendix, then a facility owner or operator shall ensure, by contract or other approved means as described in §112.2, only for the quantity of resources required to meet the cap, but shall identify sources of additional resources as indicated in section 5.4 of this appendix. The owner or operator of a facility whose planning volume exceeded the cap in 1993 must make arrangements to identify and ensure the availability, by contract or other approved means as described in §112.2, for additional capacity to be under contract by 1998 or 2003, as appropriate. For a facility that handles multiple groups of oil, the required effective daily recovery capacity for each oil group is calculated before applying the cap. The oil group calculation resulting in the largest on-water recovery volume must be used to plan for the amount of response resources for a worst case discharge, unless the oil group comprises 10 percent or less by volume of the facility's total oil storage capacity.

7.3 The procedures discussed in sections 7.3.1–7.3.3 of this appendix must be used to calculate the planning volume for identifying shoreline cleanup capacity (for Group 1 through Group 4 oils).

7.3.1 The following must be determined: the worst case discharge volume of oil for the facility; the appropriate group(s) for the types of oil handled, stored, or transported at the facility [persistent (Groups 2, 3, or 4) or non-persistent (Group 1)]; and the geographic area(s) in which the facility operates (*i.e.*, operating areas). For a facility handling, storing, or transporting oil from different groups, each group must be calculated separately. Using this information, Table 2 of this appendix must be used to determine the percentages of the total volume to be used for shoreline cleanup resource planning.

7.3.2 The shoreline cleanup planning volume must be adjusted to reflect an emulsification factor using the same procedure as described in section 7.2.2 of this appendix.

7.3.3 The resulting volume shall be used to identify an oil spill removal organization with the appropriate shoreline cleanup capability.

7.4 A response plan must identify response resources with fire fighting capability. The owner or operator of a facility that handles, stores, or transports Group 1 through Group 4 oils that does not have adequate fire fighting resources located at the facility or that cannot rely on sufficient local fire fighting resources must identify adequate fire fighting resources. It is recommended that the facility owner or operator ensure, by contract or other approved means as described in §112.2, the availability of these resources. The response plan must also identify an individual located at the facility to work with the fire department for Group 1 through Group 4 oil fires. This individual shall also verify that sufficient well-trained fire fighting resources are available within a reasonable response time to a worst case scenario. The individual may be the qualified individual identified in the response plan or another appropriate individual located at the facility.

7.5 The following is an example of the procedure described above in sections 7.2 and 7.3 of this appendix: A facility with a 270,000 barrel (11.3 million gallons) capacity for #6 oil (specific gravity 0.96) is located in a higher volume port area. The facility is on a peninsula and has docks on both the ocean and bay sides. The facility has four aboveground oil storage tanks with a combined total capacity of 80,000 barrels (3.36 million gallons) and no secondary containment. The remaining facility tanks are inside secondary containment structures. The largest aboveground oil storage tank (90,000 barrels or 3.78 million gallons) has its own secondary containment. Two 50,000 barrel (2.1 million gallon) tanks (that are not connected by a manifold) are within a common secondary containment tank area, which is capable of holding 100,000 barrels (4.2 million gallons) plus sufficient freeboard.

7.5.1 The worst case discharge for the facility is calculated by adding the capacity of all aboveground oil storage tanks without secondary containment (80,000 barrels) plus the capacity of the largest aboveground oil storage tank inside secondary containment. The resulting worst case discharge volume is 170,000 barrels or 7.14 million gallons.

7.5.2 Because the requirements for Tiers 1, 2, and 3 for inland and nearshore exceed the caps identified in Table 5 of this appendix, the facility owner will contract for a response to 10,000 barrels per day (bpd) for Tier 1, 20,000 bpd for Tier 2, and 40,000 bpd for Tier 3. Resources for the remaining 7,850 bpd for Tier 1, 9,750 bpd for Tier 2, and 7,600 bpd for Tier 3 shall be identified but need not be contracted for in advance. The facility owner or operator shall, as appropriate, also identify or contract for quantities of boom identified in their response plan for the protection of fish and wildlife and sensitive environments within the area potentially impacted by a worst case discharge from the facility. For further description of fish and wildlife and sensitive environments, see Appendices I, II, and III to DOC/NOAA's ''Guidance for Facility and Vessel Response Plans: Fish and Wildlife and Sensitive Environments,'' (see Appendix E to this part, section 10, for availability) and the applicable ACP. Attachment C–III to Appendix C provides a method for calculating a planning distance to fish and wildlife and sensitive environments and public drinking water intakes that may be impacted in the event of a worst case discharge.

7.6 The procedures discussed in sections 7.6.1—7.6.3 of this appendix must be used to determine appropriate response resources for facilities with Group 5 oils.

7.6.1 The owner or operator of a facility that handles, stores, or transports Group 5 oils shall, as appropriate, identify the response resources available by contract or other approved means, as described in §112.2. The equipment identified in a response plan shall, as appropriate, include:

(1) Sonar, sampling equipment, or other methods for locating the oil on the bottom or suspended in the water column;

(2) Containment boom, sorbent boom, silt curtains, or other methods for containing the oil that may remain floating on the surface or to reduce spreading on the bottom;

(3) Dredges, pumps, or other equipment necessary to recover oil from the bottom and shoreline;

(4) Equipment necessary to assess the impact of such discharges; and

(5) Other appropriate equipment necessary to respond to a discharge involving the type of oil handled, stored, or transported.

7.6.2 Response resources identified in a response plan for a facility that handles, stores, or transports Group 5 oils under section 7.6.1 of this appendix shall be capable of being deployed (on site) within 24 hours of discovery of a discharge to the area where the facility is operating.

7.6.3 A response plan must identify response resources with fire fighting capability. The owner or operator of a facility that handles, stores, or transports Group 5 oils that does not have adequate fire fighting resources located at the facility or that cannot rely on sufficient local fire fighting resources must identify adequate fire fighting resources. It is recommended that the owner or operator ensure, by contract or other approved means as described in §112.2, the availability of these resources. The response plan shall also identify an individual located at the facility to work with the fire department for Group 5 oil fires. This individual shall also verify that sufficient well-trained fire fighting resources are available within a reasonable response time to respond to a worst case discharge. The individual may be the qualified individual identified in the response plan or another appropriate individual located at the facility.

7.7 The procedures described in sections 7.7.1–7.7.5 of this appendix must be used to determine appropriate response plan development and evaluation criteria for facilities that handle, store, or transport non-petroleum oils. Refer to section 8 of this appendix for information on the limitations on the use of dispersants for inland and nearshore areas.

7.7.1 An owner or operator of a facility that handles, stores, or transports non-petroleum oil must provide information in his or her plan that identifies:

(1) Procedures and strategies for responding to a worst case discharge of non-petroleum oils to the maximum extent practicable; and

(2) Sources of the equipment and supplies necessary to locate, recover, and mitigate such a discharge.

7.7.2 An owner or operator of a facility that handles, stores, or transports non-petroleum oil must ensure that any equipment identified in a response plan is capable of operating in the conditions expected in the geographic area(s) (i.e., operating environments) in which the facility operates using the criteria in Table 1 of this appendix. When evaluating the operability of equipment, the facility owner or operator must consider limitations that are identified in the appropriate ACPs, including:

(1) Ice conditions;

(2) Debris;

(3) Temperature ranges; and

(4) Weather-related visibility.

7.7.3 The owner or operator of a facility that handles, stores, or transports non-petroleum oil must identify the response resources that are available by contract or other approved means, as described in §112.2. The equipment described in the response plan shall, as appropriate, include:

(1) Containment boom, sorbent boom, or other methods for containing oil floating on the surface or to protect shorelines from impact;

(2) Oil recovery devices appropriate for the type of non-petroleum oil carried; and

(3) Other appropriate equipment necessary to respond to a discharge involving the type of oil carried.

7.7.4 Response resources identified in a response plan according to section 7.7.3 of this appendix must be capable of commencing an effective on-scene response within the applicable tier response times in section 5.3 of this appendix.

7.7.5 A response plan must identify response resources with fire fighting capability. The owner or operator of a facility that handles, stores, or transports non-petroleum oils that does not have adequate fire fighting resources located at the facility or that cannot rely on sufficient local fire fighting resources must identify adequate fire fighting resources. It is recommended that the owner or operator ensure, by contract or other approved means as described in §112.2, the availability of these resources. The response plan must also identify an individual located at the facility to work with the fire department for non-petroleum fires. This individual shall also verify that sufficient well-trained fire fighting resources are available within a reasonable response time to a worst case scenario. The individual may be the qualified individual identified in the response plan or another appropriate individual located at the facility.

8.0 Determining the Availability of Alternative Response Methods

8.1 For dispersants to be identified in a response plan, they must be on the NCP Product Schedule that is maintained by EPA. (Some States have a list of approved dispersants for use within State waters. These State-approved dispersants are listed on the NCP Product Schedule.)

8.2 Identification of dispersant application in the plan does not imply that the use of this technique will be authorized. Actual authorization for use during a spill response will be governed by the provisions of the NCP and the applicable ACP. To date, dispersant application has not been approved by ACPs for inland areas or shallow nearshore areas.

9.0 Additional Equipment Necessary to Sustain Response Operations

9.1 A facility owner or operator shall, as appropriate, ensure that sufficient numbers of trained personnel and boats, aerial spotting aircraft, containment boom, sorbent materials, boom anchoring materials, and other supplies are available to sustain response operations to completion. All such equipment must be suitable for use with the primary equipment identified in the response plan. A facility owner or operator is not required to list these resources, but shall certify their availability.

9.2 A facility owner or operator shall evaluate the availability of adequate temporary storage capacity to sustain the effective daily recovery capacities from equipment identified in the plan. Because of the inefficiencies of oil spill recovery devices, response plans must identify daily storage capacity equivalent to twice the effective daily recovery capacity required on-scene. This temporary storage capacity may be reduced if a facility owner or operator can demonstrate by waste stream analysis that the efficiencies of the oil recovery devices, ability to decant waste, or the availability of alternative temporary storage or disposal locations will reduce the overall volume of oily material storage requirement.

9.3 A facility owner or operator shall ensure that his or her planning includes the capability to arrange for disposal of recovered oil products. Specific disposal procedures will be addressed in the applicable ACP.

10.0 References and Availability

10.1 All materials listed in this section are part of EPA's rulemaking docket, and are located in the Superfund Docket, Room M2615, at the U.S. Environmental Protection Agency, 401 M Street, SW., Washington, DC 20460 (Docket Number SPCC–2P). The docket is available for inspection between 9:00 a.m. and 4:00 p.m., Monday through Friday, excluding Federal holidays. Appointments to review the docket can be made by calling 202–260–3046. The public may copy a maximum of 266 pages from any regulatory docket at no cost. If the number of pages copied exceeds 266, however, a charge of 15 cents will be incurred for each additional page, plus a $25.00 administrative fee. Charges for copies and docket hours are subject to change.

10.2 The docket will mail copies of materials to requestors who are outside the Washington D.C. metro area. Materials may be available from other sources, as noted in this section. The ERNS/SPCC Information line at 202–260–2342 or the RCRA/Superfund Hotline at 800–424–9346 may also provide additional information on where to obtain documents. To contact the RCRA/Superfund Hotline in the Washington, DC metropolitan area, dial 703–412–9810. The Telecommunications Device for the Deaf (TDD) Hotline number is 800–553–7672, or, in the Washington, DC metropolitan area, 703–412–3323.

10.3 Documents Referenced

(1) National Preparedness for Response Exercise Program (PREP). The PREP draft guidelines are available from United States Coast Guard Headquarters (G–MEP–4), 2100 Second Street, SW., Washington, DC 20593. (See 58 FR 53990, October 19, 1993, Notice of Availability of PREP Guidelines).

(2) ''Guidance for Facility and Vessel Response Plans: Fish and Wildlife and Sensitive Environments'' (published in the FEDERAL

REGISTER by DOC/NOAA at 59 FR 14713, March 29, 1994). The guidance is available in the Superfund Docket (see sections 10.1 and 10.2 of this appendix).

(3) ASTM Standards. ASTM F 715, ASTM F 989, ASTM F 631–80, ASTM F 808–83 (1988). The ASTM standards are available from the American Society for Testing and Materials, 1916 Race Street, Philadelphia, PA 19103–1187.

TABLE 1 TO APPENDIX E—RESPONSE RESOURCE OPERATING CRITERIA

Oil Recovery Devices		
Operating environment	Significant wave height [1]	Sea state
Rivers and Canals	≤ 1 foot	1
Inland	≤ 3 feet	2
Great Lakes	≤ 4 feet	2–3
Ocean	≤ 6 feet	3–4

Boom				
Boom property	Use			
	Rivers and canals	Inland	Great Lakes	Ocean
Significant Wave Height [1]	≤ 1	≤ 3	≤ 4	≤ 6
Sea State	1	2	2–3	3–4
Boom height—inches (draft plus freeboard)	6–18	18–42	18–42	≥ 42
Reserve Buoyancy to Weight Ratio	2:1	2:1	2:1	3:1 to 4:1
Total Tensile Strength—pounds	4,500	15,000–20,000.	15,000–20,000.	≥ 20,000
Skirt Fabric Tensile Strength—pounds	200	300	300	500
Skirt Fabric Tear Strength—pounds	100	100	100	125

[1] Oil recovery devices and boom *shall* be at least capable of operating in wave heights up to and including the values listed in Table 1 for each operating environment.

TABLE 2 TO APPENDIX E—REMOVAL CAPACITY PLANNING TABLE

Spill location	Rivers and canals			Nearshore/inland Great Lakes		
Sustainability of on-water oil recovery	3 days			4 days		
Oil group [1]	Percent natural dissipation	Percent recovered floating oil	Percent oil onshore	Percent natural dissipation	Percent recovered floating oil	Percent oil Onshore
1. Non-persistent oils	80	10	10	80	20	10
2. Light crudes	40	15	45	50	50	30
3. Medium crudes and fuels	20	15	65	30	50	50
4. Heavy crudes and fuels	5	20	75	10	50	70

Group 5 oils are defined in section 1.2.7 of this appendix; the response resource considerations are outlined in section 7.6 of this appendix.

[1] Non-petroleum oils are defined in section 1.2.3 of this appendix; the response resource considerations are outlined in section 7.7 of this appendix.

TABLE 3 TO APPENDIX E—EMULSIFICATION FACTORS FOR PETROLEUM OIL GROUPS [1]

Non-Persistent Oil:	
Group 1	1.0
Persistent Oil:	
Group 2	1.8
Group 3	2.0
Group 4	1.4

TABLE 3 TO APPENDIX E—EMULSIFICATION FACTORS FOR PETROLEUM OIL GROUPS [1]—Continued

Group 5 oils are defined in section 1.2.7 of this appendix; the response resource considerations are outlined in section 7.6 of this appendix.

[1] See sections 1.2.2 and 1.2.7 of this appendix for group designations for non-persistent and persistent oils, respectively.

TABLE 4 TO APPENDIX E—ON-WATER OIL RECOVERY RESOURCE MOBILIZATION FACTORS

Operating area	Tier 1	Tier 2	Tier 3
Rivers and Canals	0.30	0.40	0.60
Inland/Nearshore Great Lakes	0.15	0.25	0.40

Note: These mobilization factors are for total resources mobilized, not incremental response resources.

TABLE 5 TO APPENDIX E—RESPONSE CAPABILITY CAPS BY OPERATING AREA

	Tier 1	Tier 2	Tier 3
February 18, 1993:			
All except Rivers & Canals, Great Lakes	10K bbls/day	20K bbls/day	40K bbls/day.
Great Lakes	5K bbls/day	10K bbls/day	20K bbls/day.
Rivers & Canals	1.5K bbls/day	3.0K bbls/day	6.0K bbls/day.
February 18, 1998:			
All except Rivers & Canals, Great Lakes	12.5K bbls/day	25K bbls/day	50K bbls/day.
Great Lakes	6.35K bbls/day	12.3K bbls/day	25K bbls/day.
Rivers & Canals	1.875K bbls/day	3.75K bbls/day	7.5K bbls/day.
February 18, 2003:			
All except Rivers & Canals, Great Lakes	TBD	TBD	TBD.
Great Lakes	TBD	TBD	TBD.
Rivers & Canals	TBD	TBD	TBD.

Note: The caps show cumulative overall effective daily recovery capacity, not incremental increases.
TBD=To Be Determined.

ATTACHMENT E-1 --
WORKSHEET TO PLAN VOLUME OF RESPONSE RESOURCES
FOR WORST CASE DISCHARGE

Part I Background Information

Step (A) Calculate Worst Case Discharge in barrels (Appendix D) [ ] (A)

Step (B) Oil Group[1] (Table 3 and section 1.2 of this appendix) [ ]

Step (C) Operating Area (choose one) . . [ ] Nearshore/Inland Great Lakes [ ] or Rivers and Canals

Step (D) Percentages of Oil (Table 2 of this appendix)

Percent Lost to Natural Dissipation	Percent Recovered Floating Oil	Percent Oil Onshore
[ ]	[ ]	[ ]
(D1)	(D2)	(D3)

Step (E1) On-Water Oil Recovery $\frac{\text{Step (D2) x Step (A)}}{100}$ [ ] (E1)

Step (E2) Shoreline Recovery $\frac{\text{Step (D3) x Step (A)}}{100}$ . . [ ] (E2)

Step (F) Emulsification Factor (Table 3 of this appendix) . . . . . [ ] (F)

Step (G) On-Water Oil Recovery Resource Mobilization Factor (Table 4 of this appendix)

Tier 1	Tier 2	Tier 3
[ ]	[ ]	[ ]
(G1)	(G2)	(G3)

[1] A facility that handles, stores, or transports multiple groups of oil must do separate calculations for each oil group on site except for those oil groups that constitute 10 percent or less by volume of the total oil storage capacity at the facility. For purposes of this calculation, the volumes of all products in an oil group must be summed to determine the percentage of the facility's total oil storage capacity.

ATTACHMENT E-1 (CONTINUED) --
WORKSHEET TO PLAN VOLUME OF RESPONSE RESOURCES
FOR WORST CASE DISCHARGE

Part II On-Water Oil Recovery Capacity (barrels/day)

Tier 1	Tier 2	Tier 3
Step (E1) x Step (F) x Step (G1)	Step (E1) x Step (F) x Step (G2)	Step (E1) x Step (F) x Step (G3)

Part III Shoreline Cleanup Volume (barrels) . . . . . [ ]

Step (E2) x Step (F)

Part IV On-Water Response Capacity By Operating Area
(Table 5 of this appendix)
(Amount needed to be contracted for in barrels/day)

Tier 1	Tier 2	Tier 3
(J1)	(J2)	(J3)

Part V On-Water Amount Needed to be Identified, but not Contracted for in Advance (barrels/day)

Tier 1	Tier 2	Tier 3
Part II Tier 1 - Step (J1)	Part II Tier 2 - Step (J2)	Part II Tier 3 - Step (J3)

NOTE: To convert from barrels/day to gallons/day, multiply the quantities in Parts II through V by 42 gallons/barrel.

ATTACHMENT E-1 EXAMPLE --
WORKSHEET TO PLAN VOLUME OF RESPONSE RESOURCES
FOR WORST CASE DISCHARGE

Part I Background Information

Step (A) Calculate Worst Case Discharge in barrels (Appendix D) [170,000] (A)

Step (B) Oil Group[1] (Table 3 and section 1.2 of this appendix) [4]

Step (C) Operating Area (choose one) . . . [X] Nearshore/Inland Great Lakes [ ] or Rivers and Canals

Step (D) Percentages of Oil (Table 2 of this appendix)

Percent Lost to Natural Dissipation	Percent Recovered Floating Oil	Percent Oil Onshore
10	50	70
(D1)	(D2)	(D3)

Step (E1) On-Water Oil Recovery $\frac{\text{Step (D2) x Step (A)}}{100}$ [85,000] (E1)

Step (E2) Shoreline Recovery $\frac{\text{Step (D3) x Step (A)}}{100}$ . . [119,000] (E2)

Step (F) Emulsification Factor (Table 3 of this appendix) . . . . . [1.4] (F)

Step (G) On-Water Oil Recovery Resource Mobilization Factor (Table 4 of this appendix)

Tier 1	Tier 2	Tier 3
0.15	0.25	0.40
(G1)	(G2)	(G3)

[1] A facility that handles, stores, or transports multiple groups of oil must do separate calculations for each oil group on site except for those oil groups that constitute 10 percent or less by volume of the total oil storage capacity at the facility. For purposes of this calculation, the volumes of all products in an oil group must be summed to determine the percentage of the facility's total oil storage capacity.

ATTACHMENT E-1 EXAMPLE (CONTINUED) --
WORKSHEET TO PLAN VOLUME OF RESPONSE RESOURCES
FOR WORST CASE DISCHARGE

Part II On-Water Oil Recovery Capacity (barrels/day)

Tier 1	Tier 2	Tier 3
17,850	29,750	47,600
Step (E1) x Step (F) x Step (G1)	Step (E1) x Step (F) x Step (G2)	Step (E1) x Step (F) x Step (G3)

Part III Shoreline Cleanup Volume (barrels) 166,600

Step (E2) x Step (F)

Part IV On-Water Response Capacity By Operating Area
(Table 5 of this appendix)
(Amount needed to be contracted for in barrels/day)

Tier 1	Tier 2	Tier 3
10,000	20,000	40,000
(J1)	(J2)	(J3)

Part V On-Water Amount Needed to be Identified, but not Contracted for in Advance (barrels/day)

Tier 1	Tier 2	Tier 3
7,850	9,750	7,600
Part II Tier 1 - Step (J1)	Part II Tier 2 - Step (J2)	Part II Tier 3 - Step (J3)

NOTE: To convert from barrels/day to gallons/day, multiply the quantities in Parts II through V by 42 gallons/barrel.

[59 FR 34111, July 1, 1994; 59 FR 49006, Sept. 26, 1994]

APPENDIX F TO PART 112—FACILITY-SPECIFIC RESPONSE PLAN

Table of Contents

1.0 Model Facility-Specific Response Plan
1.1 Emergency Response Action Plan
1.2 Facility Information
1.3 Emergency Response Information
1.3.1 Notification
1.3.2 Response Equipment List
1.3.3 Response Equipment Testing/Deployment
1.3.4 Personnel
1.3.5 Evacuation Plans
1.3.6 Qualified Individual's Duties
1.4 Hazard Evaluation
1.4.1 Hazard Identification
1.4.2 Vulnerability Analysis
1.4.3 Analysis of the Potential for an Oil Spill
1.4.4 Facility Reportable Oil Spill History
1.5 Discharge Scenarios
1.5.1 Small and Medium Discharges
1.5.2 Worst Case Discharge
1.6 Discharge Detection Systems
1.6.1 Discharge Detection By Personnel
1.6.2 Automated Discharge Detection
1.7 Plan Implementation
1.7.1 Response Resources for Small, Medium, and Worst Case Spills
1.7.2 Disposal Plans
1.7.3 Containment and Drainage Planning
1.8 Self-Inspection, Drills/Exercises, and Response Training
1.8.1 Facility Self-Inspection
1.8.1.1 Tank Inspection
1.8.1.2 Response Equipment Inspection
1.8.1.3 Secondary Containment Inspection
1.8.2 Facility Drills/Exercises
1.8.2.1 Qualified Individual Notification Drill Logs
1.8.2.2 Spill Management Team Tabletop Exercise Logs
1.8.3 Response Training
1.8.3.1 Personnel Response Training Logs
1.8.3.2 Discharge Prevention Meeting Logs
1.9 Diagrams
1.10 Security
2.0 Response Plan Cover Sheet
3.0 Acronyms
4.0 References

1.0 Model Facility-Specific Response Plan

(A) Owners or operators of facilities regulated under this part which pose a threat of substantial harm to the environment by discharging oil into or on navigable waters or adjoining shorelines are required to prepare and submit facility-specific response plans to EPA in accordance with the provisions in this appendix. This appendix further describes the required elements in §112.20(h).

(B) Response plans must be sent to the appropriate EPA Regional office. Figure F–1 of this Appendix lists each EPA Regional office and the address where owners or operators must submit their response plans. Those facilities deemed by the Regional Administrator (RA) to pose a threat of significant and substantial harm to the environment will have their plans reviewed and approved by EPA. In certain cases, information required in the model response plan is similar to information currently maintained in the facility's Spill Prevention, Control, and Countermeasures (SPCC) Plan as required by 40 CFR 112.3. In these cases, owners or operators may reproduce the information and include a photocopy in the response plan.

(C) A complex may develop a single response plan with a set of core elements for all regulating agencies and separate sections for the non-transportation-related and transportation-related components, as described in §112.20(h). Owners or operators of large facilities that handle, store, or transport oil at more than one geographically distinct location (e.g., oil storage areas at opposite ends of a single, continuous parcel of property) shall, as appropriate, develop separate sections of the response plan for each storage area.

Figure F-1

EPA REGIONAL OFFICES FOR RESPONSE PLAN SUBMITTAL

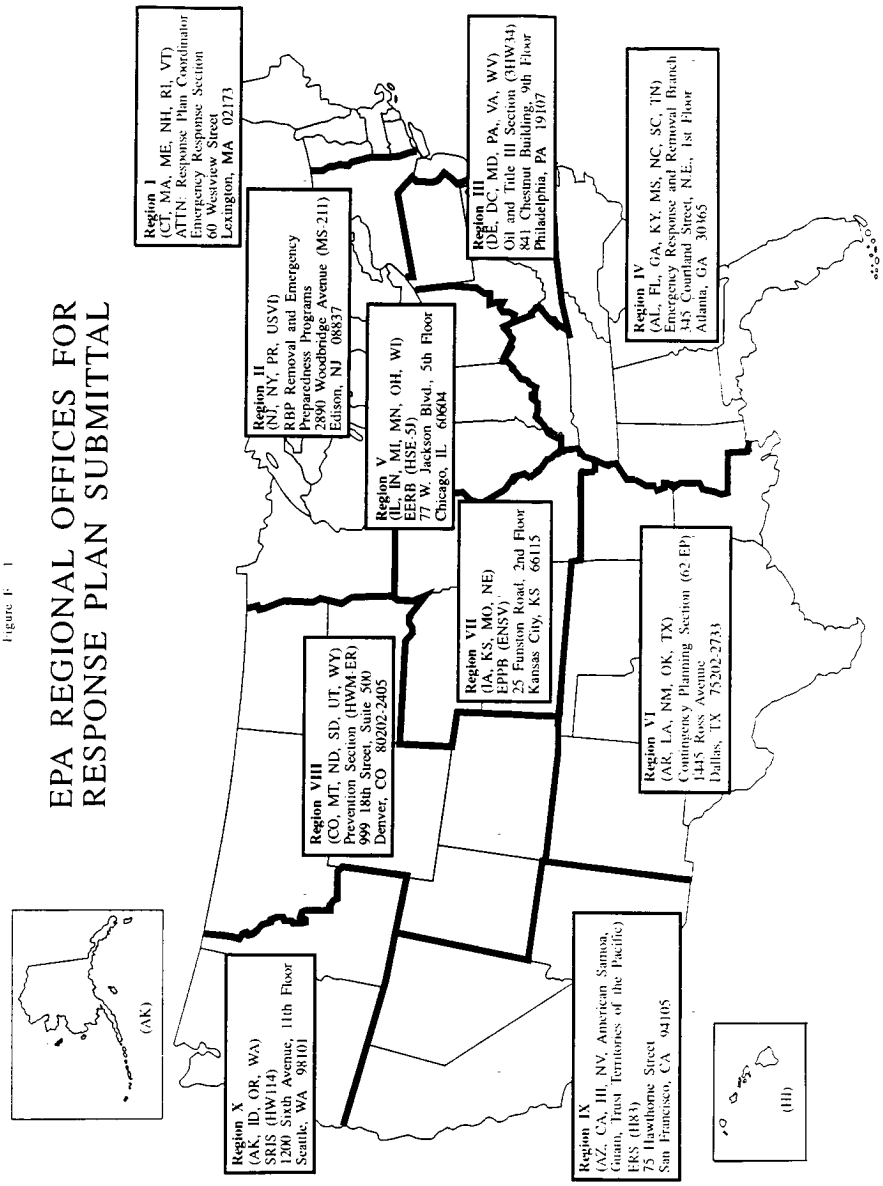

1.1 Emergency Response Action Plan

Several sections of the response plan shall be co-located for easy access by response personnel during an actual emergency or oil spill. This collection of sections shall be called the Emergency Response Action Plan. The Agency intends that the Action Plan contain only as much information as is necessary to combat the spill and be arranged so response actions are not delayed. The Action Plan may be arranged in a number of ways. For example, the sections of the Emergency Response Action Plan may be photocopies or condensed versions of the forms included in the associated sections of the response plan. Each Emergency Response Action Plan section may be tabbed for quick reference. The Action Plan shall be maintained in the front of the same binder that contains the complete response plan or it shall be contained in a separate binder. In the latter case, both binders shall be kept together so that the entire plan can be accessed by the qualified individual and appropriate spill response personnel. The Emergency Response Action Plan shall be made up of the following sections:

1. Qualified Individual Information (Section 1.2) partial
2. Emergency Notification Phone List (Section 1.3.1) partial
3. Spill Response Notification Form (Section 1.3.1) partial
4. Response Equipment List and Location (Section 1.3.2) complete
5. Response Equipment Testing and Deployment (Section 1.3.3) complete
6. Facility Response Team (Section 1.3.4) partial
7. Evacuation Plan (Section 1.3.5) condensed
8. Immediate Actions (Section 1.7.1) complete
9. Facility Diagram (Section 1.9) complete

1.2 Facility Information

The facility information form is designed to provide an overview of the site and a description of past activities at the facility. Much of the information required by this section may be obtained from the facility's existing SPCC Plan.

1.2.1 *Facility name and location:* Enter facility name and street address. Enter the address of corporate headquarters only if corporate headquarters are physically located at the facility. Include city, county, state, zip code, and phone number.

1.2.2 *Latitude and Longitude:* Enter the latitude and longitude of the facility. Include degrees, minutes, and seconds of the main entrance of the facility.

1.2.3 *Wellhead Protection Area:* Indicate if the facility is located in or drains into a wellhead protection area as defined by the Safe Drinking Water Act of 1986 (SDWA).[1] The response plan requirements in the Wellhead Protection Program are outlined by the State or Territory in which the facility resides.

1.2.4 *Owner/operator:* Write the name of the company or person operating the facility and the name of the person or company that owns the facility, if the two are different. List the address of the owner, if the two are different.

1.2.5 *Qualified Individual:* Write the name of the qualified individual for the entire facility. If more than one person is listed, each individual indicated in this section shall have full authority to implement the facility response plan. For each individual, list: name, position, home and work addresses (street addresses, not P.O. boxes), emergency phone number, and specific response training experience.

1.2.6 *Date of Oil Storage Start-up:* Enter the year which the present facility first started storing oil.

1.2.7 *Current Operation:* Briefly describe the facility's operations and include the Standard Industry Classification (SIC) code.

1.2.8 *Dates and Type of Substantial Expansion:* Include information on expansions that have occurred at the facility. Examples of such expansions include, but are not limited to: Throughput expansion, addition of a product line, change of a product line, and installation of additional oil storage capacity. The data provided shall include all facility historical information and detail the expansion of the facility. An example of substantial expansion is any material alteration of the facility which causes the owner or operator of the facility to re-evaluate and increase the response equipment necessary to adequately respond to a worst case discharge from the facility.

Date of Last Update: _____

FACILITY INFORMATION FORM

Facility Name: _____
Location (Street Address): _____
City: _____ State: _____ Zip: _____
County: _____ Phone Number: ( ) _____
Latitude: _____ Degrees _____ Minutes _____ Seconds
Longitude: _____ Degrees _____ Minutes _____ Seconds
Wellhead Protection Area: _____

[1] A wellhead protection area is defined as the surface and subsurface area surrounding a water well or wellfield, supplying a public water system, through which contaminants are reasonably likely to move toward and reach such water well or wellfield. For further information regarding State and territory protection programs, facility owners or operators may contact the SDWA Hotline at 1–800–426–4791.

Owner: _____
Owner Location (Street Address): _____
(if different from Facility Address)
City: _____ State:_____ Zip: _____
County: _____ Phone Number: ( ) _____
Operator (if not Owner): _____
Qualified Individual(s): (attach additional sheets if more than one)
Name: _____
Position: _____
Work Address: _____
Home Address: _____
Emergency Phone Number: ( ) _____
Date of Oil Storage Start-up: _____
Current Operations: _____
_____
_____
Date(s) and Type(s) of Substantial Expansion(s): _____
_____
(Attach additional sheets if necessary)

1.3 Emergency Response Information

(A) The information provided in this section shall describe what will be needed in an actual emergency involving the discharge of oil or a combination of hazardous substances and oil discharge. The Emergency Response Information section of the plan must include the following components:

(1) The information provided in the Emergency Notification Phone List in section 1.3.1 identifies and prioritizes the names and phone numbers of the organizations and personnel that need to be notified immediately in the event of an emergency. This section shall include all the appropriate phone numbers for the facility. These numbers must be verified each time the plan is updated. The contact list must be accessible to all facility employees to ensure that, in case of a discharge, any employee on site could immediately notify the appropriate parties.

(2) The Spill Response Notification Form in section 1.3.1 creates a checklist of information that shall be provided to the National Response Center (NRC) and other response personnel. All information on this checklist must be known at the time of notification, or be in the process of being collected. This notification form is based on a similar form used by the NRC. Note: Do not delay spill notification to collect the information on the list.

(3) Section 1.3.2 provides a description of the facility's list of emergency response equipment and location of the response equipment. When appropriate, the amount of oil that emergency response equipment can handle and any limitations (e.g., launching sites) must be described.

(4) Section 1.3.3 provides information regarding response equipment tests and deployment drills. Response equipment deployment exercises shall be conducted to ensure that response equipment is operational and the personnel who would operate the equipment in a spill response are capable of deploying and operating it. Only a representative sample of each type of response equipment needs to be deployed and operated, as long as the remainder is properly maintained. If appropriate, testing of response equipment may be conducted while it is being deployed. Facilities without facility-owned response equipment must ensure that the oil spill removal organization that is identified in the response plan to provide this response equipment certifies that the deployment exercises have been met. Refer to the National Preparedness for Response Exercise Program (PREP) Guidelines (see Appendix E to this part, section 10, for availability), which satisfy Oil Pollution Act (OPA) response exercise requirements.

(5) Section 1.3.4 lists the facility response personnel, including those employed by the facility and those under contract to the facility for response activities, the amount of time needed for personnel to respond, their responsibility in the case of an emergency, and their level of response training. Three different forms are included in this section. The Emergency Response Personnel List shall be composed of all personnel employed by the facility whose duties involve responding to emergencies, including oil spills, even when they are not physically present at the site. An example of this type of person would be the Building Engineer-in-Charge or Plant Fire Chief. The second form is a list of the Emergency Response Contractors (both primary and secondary) retained by the facility. Any changes in contractor status must be reflected in updates to the response plan. Evidence of contracts with response contractors shall be included in this section so that the availability of resources can be verified. The last form is the Facility Response Team List, which shall be composed of both emergency response personnel (referenced by job title/position) and emergency response contractors, included in one of the two lists described above, that will respond immediately upon discovery of an oil spill or other emergency (i.e., the first people to respond). These are to be persons normally on the facility premises or primary response contractors. Examples of these personnel would be the Facility Hazardous Materials (HAZMAT) Spill Team 1, Facility Fire Engine Company 1, Production Supervisor, or Transfer Supervisor. Company personnel must be able to respond immediately and adequately if contractor support is not available.

(6) Section 1.3.5 lists factors that must, as appropriate, be considered when preparing an evacuation plan.

(7) Section 1.3.6 references the responsibilities of the qualified individual for the facility in the event of an emergency.

(B) The information provided in the emergency response section will aid in the assessment of the facility's ability to respond to a worst case discharge and will identify additional assistance that may be needed. In addition, the facility owner or operator may want to produce a wallet-size card containing a checklist of the immediate response and notification steps to be taken in the event of an oil discharge.

1.3.1 Notification

Date of Last Update: _____

EMERGENCY NOTIFICATION PHONE LIST WHOM TO NOTIFY

Reporter's Name: _____
Date: _____
Facility Name: _____
Owner Name: _____
Facility Identification Number: _____
Date and Time of Each NRC Notification: _____

Organization	Phone No.
1. National Response Center (NRC):	1–800–424–8802
2. Qualified Individual:	
Evening Phone:	
3. Company Response Team:	
Evening Phone:	
4. Federal On-Scene Coordinator (OSC) and/or Regional Response Center (RRC):	
Evening Phone(s):	
Pager Number(s):	
5. Local Response Team (Fire Dept./Co-operatives):	
6. Fire Marshall:	
Evening Phone:	
7. State Emergency Response Commission (SERC):	
Evening Phone:	
8. State Police:	
9. Local Emergency Planning Committee (LEPC):	
10. Local Water Supply System:	
Evening Phone:	
11. Weather Report:	
12. Local Television/Radio Station for Evacuation Notification:	
13. Hospitals:	

SPILL RESPONSE NOTIFICATION FORM

Reporter's Last Name: _____
First: _____
M.I.: _____
Position: _____
Phone Numbers:
Day ( ) –
Evening ( ) –
Company: _____
Organization Type: _____
Address: _____
_____
City: _____
State: _____
Zip: _____
Were Materials Discharged? _____ (Y/N) Confidential? _____ (Y/N)
Meeting Federal Obligations to Report? _____ (Y/N) Date Called: _____
Calling for Responsible Party? _____ (Y/N) Time Called: _____

Incident Description

Source and/or Cause of Incident: _____
_____
_____
_____
_____

Date of Incident: _____
Time of Incident: _____ AM/PM
Incident Address/Location: _____
_____

Nearest City:_____ State: _____ County: _____ Zip: _____
Distance from City: _____ Units of Measure: _____ Direction from City: _____
Section: _____ Township: _____ Range: _____ Borough: _____
Container Type: _____ Tank Oil Storage Capacity: _____ Units of Measure: _____
Facility Oil Storage Capacity: _____ Units of Measure: _____
Facility Latitude: _____ Degrees _____ Minutes _____ Seconds
Facility Longitude: _____ Degrees _____ Minutes _____ Seconds

Material

CHRIS Code	Discharged quantity	Unit of measure	Material Discharged in water	Quantity	Unit of measure

Response Action

Actions Taken to Correct, Control or Mitigate Incident:

Impact

Number of Injuries: _____ Number of Deaths: _____

Were there Evacuations? _____ (Y/N) Number Evacuated: _____

Was there any Damage? _____ (Y/N)

Damage in Dollars (approximate): _____

Medium Affected: _____

Description: _____

More Information about Medium: _____

Additional Information

Any information about the incident not recorded elsewhere in the report:

Caller Notifications

EPA? _____ (Y/N) USCG? _____ (Y/N) State? _____ (Y/N)

Other? _____ (Y/N) Describe: _____

1.3.2 Response Equipment List

Date of Last Update:_____

FACILITY RESPONSE EQUIPMENT LIST

1. Skimmers/Pumps—Operational Status: —
Type, Model, and Year: _____

Type Model Year

Number: _____

Capacity: _____ gal./min.

Daily Effective Recovery Rate: _____

Storage Location(s): _____

Date Fuel Last Changed: _____

2. Boom—Operational Status: _____

Type, Model, and Year: _____

Type Model Year

Number: _____

Size (length): _____ ft.

Containment Area: _____ sq. ft.

Storage Location: _____

3. Chemicals Stored (Dispersants listed on EPA's NCP Product Schedule)

Type	Amount	Date purchased	Treatment capacity	Storage location

Were appropriate procedures used to receive approval for use of dispersants in accordance with the NCP (40 CFR 300.910) and the Area Contingency Plan (ACP), where applicable?_____ (Y/N).

Name and State of On-Scene Coordinator (OSC) authorizing use: _____ .

Date Authorized: _____ .

4. Dispersant Dispensing Equipment—Operational Status: _____ .

Type and year	Capacity	Storage location	Response time (minutes)

5. Sorbents—Operational Status: _____
   Type and Year Purchased: _____
   Amount: _____
   Absorption Capacity (gal.): _____
   Storage Location(s): _____
6. Hand Tools—Operational Status: _____

Type and year	Quantity	Storage location

7. Communication Equipment (include operating frequency and channel and/or cellular phone numbers)—Operational Status: _____

Type and year	Quantity	Storage location/ number

8. Fire Fighting and Personnel Protective Equipment—Operational Status: _____

Type and year	Quantity	Storage location

Type and year	Quantity	Storage location

9. Other (e.g., Heavy Equipment, Boats and Motors)—Operational Status: _____

Type and year	Quantity	Storage location

1.3.3 Response Equipment Testing/Deployment

Date of Last Update:_____

Response Equipment Testing and Deployment Drill Log

Last Inspection or Response Equipment Test Date: _____
Inspection Frequency: _____
Last Deployment Drill Date: _____
Deployment Frequency: _____
Oil Spill Removal Organization Certification (if applicable): _____

1.3.4 Personnel

Date of Last Update:_____

EMERGENCY RESPONSE PERSONNEL

Company Personnel

Name	Phone [1]	Response time	Responsibility during response action	Response training type/date
1.				
2.				
3.				
4.				
5.				
6.				
7.				
8.				
9.				
10.				
11.				
12.				

[1] Phone number to be used when person is not on-site.

EMERGENCY RESPONSE CONTRACTORS

Date of Last Update: _____

Contractor	Phone	Response time	Contract responsibility [1]
1.			
2.			

3.			
4.			

[1] Include evidence of contracts/agreements with response contractors to ensure the availability of personnel and response equipment.

FACILITY RESPONSE TEAM

Date of Last Update: _____

Team member	Response time (minutes)	Phone or pager number (day/evening)
Qualified Individual:		/
		/
		/
		/
		/
		/
		/
		/
		/
		/
		/
		/
		/
		/

FACILITY RESPONSE TEAM—Continued

Date of Last Update: _____

Team member	Response time (minutes)	Phone or pager number (day/evening)
		/
		/
		/

Note: If the facility uses contracted help in an emergency response situation, the owner or operator must provide the contractors' names and review the contractors' capacities to provide adequate personnel and response equipment.

1.3.5 Evacuation Plans

1.3.5.1 Based on the analysis of the facility, as discussed elsewhere in the plan, a facility-wide evacuation plan shall be developed. In addition, plans to evacuate parts of the facility that are at a high risk of exposure in the event of a spill or other release must be developed. Evacuation routes must be shown on a diagram of the facility (see section 1.9 of this appendix). When developing evacuation plans, consideration must be given to the following factors, as appropriate:

(1) Location of stored materials;

(2) Hazard imposed by spilled material;

(3) Spill flow direction;

(4) Prevailing wind direction and speed;

(5) Water currents, tides, or wave conditions (if applicable);

(6) Arrival route of emergency response personnel and response equipment;

(7) Evacuation routes;

(8) Alternative routes of evacuation;

(9) Transportation of injured personnel to nearest emergency medical facility;

(10) Location of alarm/notification systems;

(11) The need for a centralized check-in area for evacuation validation (roll call);

(12) Selection of a mitigation command center; and

(13) Location of shelter at the facility as an alternative to evacuation.

1.3.5.2 One resource that may be helpful to owners or operators in preparing this section of the response plan is The *Handbook of Chemical Hazard Analysis Procedures* by the Federal Emergency Management Agency (FEMA), Department of Transportation (DOT), and EPA. *The Handbook of Chemical Hazard Analysis Procedures* is available from: FEMA , Publication Office, 500 C. Street, S.W., Washington, DC 20472, (202) 646–3484.

1.3.5.3 As specified in §112.20(h)(1)(vi), the facility owner or operator must reference existing community evacuation plans, as appropriate.

1.3.6 Qualified Individual's Duties

The duties of the designated qualified individual are specified in §112.20(h)(3)(ix). The qualified individual's duties must be described and be consistent with the minimum requirements in §112.20(h)(3)(ix). In addition, the qualified individual must be identified with the Facility Information in section 1.2 of the response plan.

1.4 Hazard Evaluation

This section requires the facility owner or operator to examine the facility's operations closely and to predict where discharges could occur. Hazard evaluation is a widely used industry practice that allows facility owners or operators to develop a complete understanding of potential hazards and the response actions necessary to address these hazards. *The Handbook of Chemical Hazard Analysis Procedures*, prepared by the EPA, DOT, and the FEMA and the *Hazardous Materials Emergency Planning Guide* (NRT–1), prepared by the National Response Team are good references for conducting a hazard analysis. Hazard identification and evaluation will assist facility owners or operators in planning for potential discharges, thereby reducing the severity of discharge impacts that may occur in the future. The evaluation also may help the operator identify and correct potential sources of discharges. In addition, special hazards to workers and emergency response personnel's health and safety shall be evaluated, as well as the facility's oil spill history.

1.4.1 Hazard Identification

The Tank and Surface Impoundment (SI) forms, or their equivalent, that are part of this section must be completed according to the directions below. (''Surface Impoundment'' means a facility or part of a facility which is a natural topographic depression, man-made excavation, or diked area formed primarily of earthen materials (although it may be lined with man-made materials), which is designed to hold an accumulation of liquid wastes or wastes containing free liquids, and which is not an injection well or a seepage facility.) Similar worksheets, or their equivalent, must be developed for any other type of storage containers.

(1) List each tank at the facility with a separate and distinct identifier. Begin aboveground tank identifiers with an ''A'' and belowground tank identifiers with a ''B'', or submit multiple sheets with the aboveground tanks and belowground tanks on separate sheets.

(2) Use gallons for the maximum capacity of a tank; and use square feet for the area.

(3) Using the appropriate identifiers and the following instructions, fill in the appropriate forms:

(a) Tank or SI number—Using the aforementioned identifiers (A or B) or multiple reporting sheets, identify each tank or SI at the facility that stores oil or hazardous materials.

(b) Substance Stored—For each tank or SI identified, record the material that is stored therein. If the tank or SI is used to store more than one material, list all of the stored materials.

(c) Quantity Stored—For each material stored in each tank or SI, report the average volume of material stored on any given day.

(d) Tank Type or Surface Area/Year—For each tank, report the type of tank (e.g., floating top), and the year the tank was originally installed. If the tank has been refabricated, the year that the latest refabrication was completed must be recorded in parentheses next to the year installed. For

each SI, record the surface area of the impoundment and the year it went into service.

(e) Maximum Capacity—Record the operational maximum capacity for each tank and SI. If the maximum capacity varies with the season, record the upper and lower limits.

(f) Failure/Cause—Record the cause and date of any tank or SI failure which has resulted in a loss of tank or SI contents.

(4) Using the numbers from the tank and SI forms, label a schematic drawing of the facility. This drawing shall be identical to any schematic drawings included in the SPCC Plan.

(5) Using knowledge of the facility and its operations, describe the following in writing:

(a) The loading and unloading of transportation vehicles that risk the discharge of oil or release of hazardous substances during transport processes. These operations may include loading and unloading of trucks, railroad cars, or vessels. Estimate the volume of material involved in transfer operations, if the exact volume cannot be determined.

(b) Day-to-day operations that may present a risk of discharging oil or releasing a hazardous substance. These activities include scheduled venting, piping repair or replacement, valve maintenance, transfer of tank contents from one tank to another, etc. (not including transportation-related activities). Estimate the volume of material involved in these operations, if the exact volume cannot be determined.

(c) The secondary containment volume associated with each tank and/or transfer point at the facility. The numbering scheme developed on the tables, or an equivalent system, must be used to identify each containment area. Capacities must be listed for each individual unit (tanks, slumps, drainage traps, and ponds), as well as the facility total.

(d) Normal daily throughput for the facility and any effect on potential discharge volumes that a negative or positive change in that throughput may cause.

HAZARD IDENTIFICATION TANKS [1]

Date of Last Update: _____

Tank No.	Substance Stored (Oil and Hazardous Substance)	Quantity Stored (gallons)	Tank Type/Year	Maximum Capacity (gallons)	Failure/Cause

[1] Tank = any container that stores oil.
Attach as many sheets as necessary.

HAZARD IDENTIFICATION SURFACE IMPOUNDMENTS (SIS)

Date of Last Update: _____

SI No.	Substance Stored	Quantity Stored (gallons)	Surface Area/Year	Maximum Capacity (gallons)	Failure/Cause

HAZARD IDENTIFICATION SURFACE IMPOUNDMENTS (SIS)—Continued

Date of Last Update: _____

SI No.	Substance Stored	Quantity Stored (gallons)	Surface Area/Year	Maximum Capacity (gallons)	Failure/Cause

Attach as many sheets as necessary.

1.4.2 Vulnerability Analysis

The vulnerability analysis shall address the potential effects (i.e., to human health, property, or the environment) of an oil spill. Attachment C–III to Appendix C to this part provides a method that owners or operators shall use to determine appropriate distances from the facility to fish and wildlife and sensitive environments. Owners or operators can use a comparable formula that is considered acceptable by the RA. If a comparable formula is used, documentation of the reliability and analytical soundness of the formula must be attached to the response plan cover sheet. This analysis must be prepared for each facility and, as appropriate, must discuss the vulnerability of:

(1) Water intakes (drinking, cooling, or other);

(2) Schools;

(3) Medical facilities;

(4) Residential areas;

(5) Businesses;

(6) Wetlands or other sensitive environments;[2]

(7) Fish and wildlife;

(8) Lakes and streams;

(9) Endangered flora and fauna;

(10) Recreational areas;

(11) Transportation routes (air, land, and water);

(12) Utilities; and

(13) Other areas of economic importance (e.g., beaches, marinas) including terrestrially sensitive environments, aquatic environments, and unique habitats.

1.4.3 Analysis of the Potential for an Oil Spill

Each owner or operator shall analyze the probability of a spill occurring at the facility. This analysis shall incorporate factors such as oil spill history, horizontal range of a potential spill, and vulnerability to natural disaster, and shall, as appropriate, incorporate other factors such as tank age. This analysis will provide information for developing discharge scenarios for a worst case discharge and small and medium discharges and aid in the development of techniques to reduce the size and frequency of spills. The owner or operator may need to research the age of the tanks and the oil spill history at the facility.

1.4.4 Facility Reportable Oil Spill History

Briefly describe the facility's reportable oil spill[3] history for the entire life of the facility to the extent that such information is reasonably identifiable, including:

(1) Date of discharge(s);

(2) List of discharge causes;

(3) Material(s) discharged;

(4) Amount discharged in gallons;

(5) Amount of discharge that reached navigable waters, if applicable;

(6) Effectiveness and capacity of secondary containment;

(7) Clean-up actions taken;

(8) Steps taken to reduce possibility of recurrence;

(9) Total oil storage capacity of the tank(s) or impoundment(s) from which the material discharged;

(10) Enforcement actions;

(11) Effectiveness of monitoring equipment; and

[2] Refer to the DOC/NOAA ''Guidance for Facility and Vessel Response Plans: Fish and Wildlife and Sensitive Environments'' (See appendix E to this part, section 10, for availability).

[3] As described in 40 CFR part 110, reportable oil spills are those that: (a) violate applicable water quality standards, or (b) cause a film or sheen upon or discoloration of the surface of the water or adjoining shorelines or cause a sludge or emulsion to be deposited beneath the surface of the water or upon adjoining shorelines.

(12) Description(s) of how each oil spill was detected.

The information solicited in this section may be similar to requirements in 40 CFR 112.4(a). Any duplicate information required by §112.4(a) may be photocopied and inserted.

1.5 Discharge Scenarios

In this section, the owner or operator is required to provide a description of the facility's worst case discharge, as well as a small and medium spill, as appropriate. A multi-level planning approach has been chosen because the response actions to a spill (i.e., necessary response equipment, products, and personnel) are dependent on the magnitude of the spill. Planning for lesser discharges is necessary because the nature of the response may be qualitatively different depending on the quantity of the discharge. The facility owner or operator shall discuss the potential direction of the spill pathway.

1.5.1 Small and Medium Discharges

1.5.1.1 To address multi-level planning requirements, the owner or operator must consider types of facility-specific spill scenarios that may contribute to a small or medium spill. The scenarios shall account for all the operations that take place at the facility, including but not limited to:

(1) Loading and unloading of surface transportation;

(2) Facility maintenance;

(3) Facility piping;

(4) Pumping stations and sumps;

(5) Oil storage tanks;

(6) Vehicle refueling; and

(7) Age and condition of facility and components.

1.5.1.2 The scenarios shall also consider factors that affect the response efforts required by the facility. These include but are not limited to:

(1) Size of the spill;

(2) Proximity to downgradient wells, waterways, and drinking water intakes;

(3) Proximity to fish and wildlife and sensitive environments;

(4) Likelihood that the discharge will travel offsite (i.e., topography, drainage) ;

(5) Location of the material spilled (i.e., on a concrete pad or directly on the soil);

(6) Material discharged;

(7) Weather or aquatic conditions (i.e., river flow);

(8) Available remediation equipment;

(9) Probability of a chain reaction of failures; and

(10) Direction of spill pathway.

1.5.2 Worst Case Discharge

1.5.2.1 In this section, the owner or operator must identify the worst case discharge volume at the facility. Worksheets for production and non-production facility owners or operators to use when calculating worst case discharge are presented in Appendix D to this part. When planning for the worst case discharge response, all of the aforementioned factors listed in the small and medium discharge section of the response plan shall be addressed.

1.5.2.2 For onshore storage facilities and production facilities, permanently manifolded oil storage tanks are defined as tanks that are designed, installed, and/or operated in such a manner that the multiple tanks function as one storage unit (i.e., multiple tank volumes are equalized). In this section of the response plan, owners or operators must provide evidence that oil storage tanks with common piping or piping systems are not operated as one unit. If such evidence is provided and is acceptable to the RA, the worst case discharge volume shall be based on the combined oil storage capacity of all manifold tanks or the oil storage capacity of the largest single oil storage tank within the secondary containment area, whichever is greater. For permanently manifolded oil storage tanks that function as one storage unit, the worst case discharge shall be based on the combined oil storage capacity of all manifolded tanks or the oil storage capacity of the largest single tank within a secondary containment area, whichever is greater. For purposes of the worst case discharge calculation, permanently manifolded oil storage tanks that are separated by internal divisions for each tank are considered to be single tanks and individual manifolded tank volumes are not combined.

1.6 Discharge Detection Systems

In this section, the facility owner or operator shall provide a detailed description of the procedures and equipment used to detect discharges. A section on spill detection by personnel and a discussion of automated spill detection, if applicable, shall be included for both regular operations and after hours operations. In addition, the facility owner or operator shall discuss how the reliability of any automated system will be checked and how frequently the system will be inspected.

1.6.1 Discharge Detection by Personnel

In this section, facility owners or operators shall describe the procedures and personnel that will detect any spill or uncontrolled discharge of oil or release of a hazardous substance. A thorough discussion of facility inspections must be included. In addition, a description of initial response actions shall be addressed. This section shall reference section 1.3.1 of the response plan for emergency response information.

1.6.2 Automated Discharge Detection

In this section, facility owners or operators must describe any automated spill detection equipment that the facility has in place. This section shall include a discussion of overfill alarms, secondary containment sensors, etc. A discussion of the plans to verify an automated alarm and the actions to be taken once verified must also be included.

1.7 Plan Implementation

In this section, facility owners or operators must explain in detail how to implement the facility's emergency response plan by describing response actions to be carried out under the plan to ensure the safety of the facility and to mitigate or prevent discharges described in section 1.5 of the response plan. This section shall include the identification of response resources for small, medium, and worst case spills; disposal plans; and containment and drainage planning. A list of those personnel who would be involved in the cleanup shall be identified. Procedures that the facility will use, where appropriate or necessary, to update their plan after an oil spill event and the time frame to update the plan must be described.

1.7.1 Response Resources for Small, Medium, and Worst Case Spills

1.7.1.1 Once the spill scenarios have been identified in section 1.5 of the response plan, the facility owner or operator shall identify and describe implementation of the response actions. The facility owner or operator shall demonstrate accessibility to the proper response personnel and equipment to effectively respond to all of the identified spill scenarios. The determination and demonstration of adequate response capability are presented in Appendix E to this part. In addition, steps to expedite the cleanup of oil spills must be discussed. At a minimum, the following items must be addressed:

(1) Emergency plans for spill response;

(2) Additional response training;

(3) Additional contracted help;

(4) Access to additional response equipment/experts; and

(5) Ability to implement the plan including response training and practice drills.

1.7.1.2A recommended form detailing immediate actions follows.

Oil Spill Response—Immediate Actions

1. Stop the product flow	Act quickly to secure pumps, close valves, etc.
2. Warn personnel	Enforce safety and security measures.
3. Shut off ignition sources.	Motors, electrical circuits, open flames, etc.
4. Initiate containment	Around the tank and/or in the water with oil boom.
5. Notify NRC	1–800–424–8802
6. Notify OSC	
7. Notify, as appropriate	

Source: FOSS, Oil Spill Response—Emergency Procedures, Revised December 3, 1992.

1.7.2 Disposal Plans

1.7.2.1 Facility owners or operators must describe how and where the facility intends to recover, reuse, decontaminate, or dispose of materials after a discharge has taken place. The appropriate permits required to transport or dispose of recovered materials according to local, State, and Federal requirements must be addressed. Materials that must be accounted for in the disposal plan, as appropriate, include:

(1) Recovered product;

(2) Contaminated soil;

(3) Contaminated equipment and materials, including drums, tank parts, valves, and shovels;

(4) Personnel protective equipment;

(5) Decontamination solutions;

(6) Adsorbents; and

(7) Spent chemicals.

1.7.2.2 These plans must be prepared in accordance with Federal (e.g., the Resource Conservation and Recovery Act [RCRA]), State, and local regulations, where applicable. A copy of the disposal plans from the facility's SPCC Plan may be inserted with this section, including any diagrams in those plans.

Material	Disposal facility	Location	RCRA permit/manifest
1.			
2.			
3.			
4.			

1.7.3 Containment and Drainage Planning

A proper plan to contain and control a spill through drainage may limit the threat of harm to human health and the environment. This section shall describe how to contain and control a spill through drainage, including:

(1) The available volume of containment (use the information presented in section 1.4.1 of the response plan);

(2) The route of drainage from oil storage and transfer areas;

(3) The construction materials used in drainage troughs;

(4) The type and number of valves and separators used in the drainage system;

(5) Sump pump capacities;

(6) The containment capacity of weirs and booms that might be used and their location (see section 1.3.2 of this appendix); and

(7) Other cleanup materials.

In addition, facility owners or operators must meet the inspection and monitoring requirements for drainage contained in 40 CFR 112.7(e). A copy of the containment and drainage plans that are required in 40 CFR 112.7(e) may be inserted in this section, including any diagrams in those plans.

Note: The general permit for stormwater drainage may contain additional requirements.

1.8 Self-Inspection, Drills/Exercises, and Response Training

The owner or operator must develop programs for facility response training and for drills/exercises according to the requirements of 40 CFR 112.21. Logs must be kept for facility drills/exercises, personnel response training, and spill prevention meetings. Much of the recordkeeping information required by this section is also contained in the SPCC Plan required by 40 CFR 112.3. These logs may be included in the facility response plan or kept as an annex to the facility response plan.

1.8.1 Facility Self-Inspection

Pursuant to 40 CFR 112.7(e)(8), each facility shall include the written procedures and records of inspections in the SPCC Plan. The inspection shall include the tanks, secondary containment, and response equipment at the facility. Records of the inspections of tanks and secondary containment required by 40 CFR 112.7(e) shall be cross-referenced in the response plan. The inspection of response equipment is a new requirement in this plan. Facility self-inspection requires two steps: (1) a checklist of things to inspect; and (2) a method of recording the actual inspection and its findings. The date of each inspection shall be noted. These records are required to be maintained for 5 years.

1.8.1.1 Tank Inspection

The tank inspection checklist presented below has been included as guidance during inspections and monitoring. Similar requirements exist in 40 CFR 112.7(e). Duplicate information from the SPCC Plan may be photocopied and inserted in this section. The inspection checklist consists of the following items:

TANK INSPECTION CHECKLIST

1. Check tanks for leaks, specifically looking for:
   A. drip marks;
   B. discoloration of tanks;
   C. puddles containing spilled or leaked material;
   D. corrosion;
   E. cracks; and
   F. localized dead vegetation.
2. Check foundation for:
   A. cracks;
   B. discoloration;
   C. puddles containing spilled or leaked material;
   D. settling;
   E. gaps between tank and foundation; and
   F. damage caused by vegetation roots.
3. Check piping for:
   A. droplets of stored material;
   B. discoloration;
   C. corrosion;
   D. bowing of pipe between supports;
   E. evidence of stored material seepage from valves or seals; and
   F. localized dead vegetation.

TANK/SURFACE IMPOUNDMENT INSPECTION LOG

Inspector	Tank or SI#	Date	Comments

TANK/SURFACE IMPOUNDMENT INSPECTION LOG—Continued

Inspector	Tank or SI#	Date	Comments

1.8.1.2 Response Equipment Inspection

Using the Emergency Response Equipment List provided in section 1.3.2 of the response plan, describe each type of response equipment, checking for the following:

Response Equipment Checklist

1. Inventory (item and quantity);
2. Storage location;
3. Accessibility (time to access and respond);
4. Operational status/condition;
5. Actual use/testing (last test date and frequency of testing); and
6. Shelf life (present age, expected replacement date).

Please note any discrepancies between this list and the available response equipment.

RESPONSE EQUIPMENT INSPECTION LOG

[Use section 1.3.2 of the response plan as a checklist]

Inspector	Date	Comments

RESPONSE EQUIPMENT INSPECTION LOG—Continued

[Use section 1.3.2 of the response plan as a checklist]

Inspector	Date	Comments

1.8.1.3 Secondary Containment Inspection

Inspect the secondary containment (as described in sections 1.4.1 and 1.7.2 of the response plan), checking the following:

Secondary Containment Checklist

1. Dike or berm system.
   A. Level of precipitation in dike/available capacity;
   B. Operational status of drainage valves;
   C. Dike or berm permeability;
   D. Debris;
   E. Erosion;
   F. Permeability of the earthen floor of diked area; and
   G. Location/status of pipes, inlets, drainage beneath tanks, etc.
2. Secondary containment
   A. Cracks;
   B. Discoloration;
   C. Presence of spilled or leaked material (standing liquid);
   D. Corrosion; and
   E. Valve conditions.
3. Retention and drainage ponds
   A. Erosion;
   B. Available capacity;
   C. Presence of spilled or leaked material;
   D. Debris; and
   E. Stressed vegetation.

During inspection, make note of discrepancies in any of the above mentioned items, and report them immediately to the proper facility personnel. Similar requirements exist in 40 CFR 112.7(e). Duplicate information from the SPCC Plan may be photocopied and inserted in this section.

1.8.2 Facility Drills/Exercises

(A) CWA section 311(j)(5), as amended by OPA, requires the response plan to contain a description of facility drills/exercises. According to 40 CFR 112.21(c), the facility owner or operator shall develop a program of facility response drills/exercises, including evaluation procedures. Following the PREP guidelines (see Appendix E to this part, section 10, for availability) would satisfy a facility's requirements for drills/exercises under this part. Alternately, under §112.21(c), a facility owner or operator may develop a program that is not based on the PREP guidelines. Such a program is subject to approval by the Regional Administrator based on the description of the program provided in the response plan.

(B) The PREP Guidelines specify that the facility conduct internal and external drills/exercises. The internal exercises include: qualified individual notification drills, spill management team tabletop exercises, equipment deployment exercises, and unannounced exercises. External exercises include Area Exercises. Credit for an Area or Facility-specific Exercise will be given to the facility for an actual response to a spill in the area if the plan was utilized for response to the spill and the objectives of the Exercise were met and were properly evaluated, documented and self-certified.

(C) Section 112.20(h)(8)(ii) requires the facility owner or operator to provide a description of the drill/exercise program to be carried out under the response plan. Qualified Individual Notification Drill and Spill Management Team Tabletop Drill logs shall be provided in sections 1.8.2.1 and 1.8.2.2, respectively. These logs may be included in the facility response plan or kept as an annex to the facility response plan. See section 1.3.3 of this appendix for Equipment Deployment Drill Logs.

1.8.2.1 Qualified Individual Notification Drill Logs Qualified Individual Notification Drill Log

Date: _____

Company: _____

Qualified Individual(s): _____
Emergency Scenario: _____

Evaluation: _____

Changes to be Implemented: _____

Time Table for Implementation: _____

1.8.2.2 Spill Management Team Tabletop Exercise Logs Spill Management Team Tabletop Exercise Log

Date: _____
Company: _____
Qualified Individual(s): _____
Emergency Scenario: _____

Evaluation: _____

Changes to be Implemented: _____

Time Table for Implementation: _____

1.8.3 Response Training

Section 112.21(a) requires facility owners or operators to develop programs for facility response training. Facility owners or operators are required by §112.20(h)(8)(iii) to provide a description of the response training program to be carried out under the response plan. A facility's training program can be based on the USCG's Training Elements for Oil Spill Response, to the extent applicable to facility operations, or another response training program acceptable to the RA. The training elements are available from Petty Officer Daniel Caras at (202) 267–6570 or fax 267–4085/4065. Personnel response training logs and discharge prevention meeting logs shall be included in sections 1.8.3.1 and 1.8.3.2 of the response plan respectively. These logs may be included in the facility response plan or kept as an annex to the facility response plan.

1.8.3.1 Personnel Response Training Logs

PERSONNEL RESPONSE TRAINING LOG

Name	Response training/date and number of hours	Prevention training/date and number of hours

1.8.3.2 Discharge Prevention Meetings Logs

DISCHARGE PREVENTION MEETING LOG

Date: _____
Attendees: _____

Subject/issue identified	Required action	Implementation date

Subject/issue identified	Required action	Implementation date

1.9 Diagrams

The facility-specific response plan shall include the following diagrams. Additional diagrams that would aid in the development of response plan sections may also be included.

(1) The Site Plan Diagram shall, as appropriate, include and identify:
(A) the entire facility to scale;
(B) above and below ground bulk oil storage tanks;
(C) the contents and capacities of bulk oil storage tanks;
(D) the contents and capacity of drum oil storage areas;
(E) the contents and capacities of surface impoundments;
(F) process buildings;
(G) transfer areas;
(H) secondary containment systems (location and capacity);
(I) structures where hazardous materials are stored or handled, including materials stored and capacity of storage;
(J) location of communication and emergency response equipment;
(K) location of electrical equipment which contains oil; and
(L) for complexes only, the interface(s) (i.e., valve or component) between the portion of the facility regulated by EPA and the portion(s) regulated by other Agencies. In most cases, this interface is defined as the last valve inside secondary containment before piping leaves the secondary containment area to connect to the transportation-related portion of the facility (i.e., the structure used or intended to be used to transfer oil to or from a vessel or pipeline). In the absence of secondary containment, this interface is the valve manifold adjacent to the tank nearest the transfer structure as described above. The interface may be defined differently at a specific facility if agreed to by the RA and the appropriate Federal official.

(2) The Site Drainage Plan Diagram shall, as appropriate, include:
(A) major sanitary and storm sewers, manholes, and drains;
(B) weirs and shut-off valves;
(C) surface water receiving streams;
(D) fire fighting water sources;
(E) other utilities;
(F) response personnel ingress and egress;
(G) response equipment transportation routes; and
(H) direction of spill flow from discharge points.

(3) The Site Evacuation Plan Diagram shall, as appropriate, include:
(A) site plan diagram with evacuation route(s); and
(B) location of evacuation regrouping areas.

1.10 Security

According to 40 CFR 112.7(e)(9), facilities are required to maintain a certain level of security, as appropriate. In this section, a description of the facility security shall be provided and include, as appropriate:

(1) emergency cut-off locations (automatic or manual valves);
(2) enclosures (e.g., fencing, etc.);
(3) guards and their duties, day and night;
(4) lighting;
(5) valve and pump locks; and
(6) pipeline connection caps.

The SPCC Plan contains similar information. Duplicate information may be photocopied and inserted in this section.

2.0 Response Plan Cover Sheet

A three-page form has been developed to be completed and submitted to the RA by owners or operators who are required to prepare and submit a facility-specific response plan. The cover sheet (Attachment F–1) must accompany the response plan to provide the Agency with basic information concerning the facility. This section will describe the Response Plan Cover Sheet and provide instructions for its completion.

2.1 General Information

Owner/Operator of Facility: Enter the name of the owner of the facility (if the owner is the operator). Enter the operator of the facility if otherwise. If the owner/operator of the facility is a corporation, enter the name

of the facility's principal corporate executive. Enter as much of the name as will fit in each section.

(1) *Facility Name:* Enter the proper name of the facility.

(2) *Facility Address:* Enter the street address, city, State, and zip code.

(3) *Facility Phone Number:* Enter the phone number of the facility.

(4) *Latitude and Longitude:* Enter the facility latitude and longitude in degrees, minutes, and seconds.

(5) *Dun and Bradstreet Number:* Enter the facility's Dun and Bradstreet number if available (this information may be obtained from public library resources).

(6) *Standard Industrial Classification (SIC) Code:* Enter the facility's SIC code as determined by the Office of Management and Budget (this information may be obtained from public library resources).

(7) *Largest Oil Storage Tank Capacity:* Enter the capacity in GALLONS of the largest aboveground oil storage tank at the facility.

(8) *Maximum Oil Storage Capacity:* Enter the total maximum capacity in GALLONS of all aboveground oil storage tanks at the facility.

(9) *Number of Oil Storage Tanks:* Enter the number of all aboveground oil storage tanks at the facility.

(10) *Worst Case Discharge Amount:* Using information from the worksheets in Appendix D, enter the amount of the worst case discharge in GALLONS.

(11) *Facility Distance to Navigable Waters:* Mark the appropriate line for the nearest distance between an opportunity for discharge (i.e., oil storage tank, piping, or flowline) and a navigable water.

2.2 Applicability of Substantial Harm Criteria

Using the flowchart provided in Attachment C–I to Appendix C to this part, mark the appropriate answer to each question. Explanations of referenced terms can be found in Appendix C to this part. If a comparable formula to the ones described in Attachment C–III to Appendix C to this part is used to calculate the planning distance, documentation of the reliability and analytical soundness of the formula must be attached to the response plan cover sheet.

2.3 Certification

Complete this block after all other questions have been answered.

3.0 Acronyms

ACP: Area Contingency Plan
ASTM: American Society of Testing Materials
bbls: Barrels
bpd: Barrels per Day
bph: Barrels per Hour
CHRIS: Chemical Hazards Response Information System
CWA: Clean Water Act
DOI: Department of Interior
DOC: Department of Commerce
DOT: Department of Transportation
EPA: Environmental Protection Agency
FEMA: Federal Emergency Management Agency
FR: Federal Register
gal: Gallons
gpm: Gallons per Minute
HAZMAT: Hazardous Materials
LEPC: Local Emergency Planning Committee
MMS: Minerals Management Service (part of DOI)
NCP: National Oil and Hazardous Substances Pollution Contingency Plan
NOAA: National Oceanic and Atmospheric Administration (part of DOC)
NRC: National Response Center
NRT: National Response Team
OPA: Oil Pollution Act of 1990
OSC: On-Scene Coordinator
PREP: National Preparedness for Response Exercise Program
RA: Regional Administrator
RCRA: Resource Conservation and Recovery Act
RRC: Regional Response Centers
RRT: Regional Response Team
RSPA: Research and Special Programs Administration
SARA: Superfund Amendments and Reauthorization Act
SERC: State Emergency Response Commission
SDWA: Safe Drinking Water Act of 1986
SI: Surface Impoundment
SIC: Standard Industrial Classification
SPCC: Spill Prevention, Control, and Countermeasures
USCG: United States Coast Guard

4.0 References

CONCAWE. 1982. Methodologies for Hazard Analysis and Risk Assessment in the Petroleum Refining and Storage Industry. Prepared by CONCAWE's Risk Assessment Ad-hoc Group.

U.S. Department of Housing and Urban Development. 1987. Siting of HUD-Assisted Projects Near Hazardous Facilities: Acceptable Separation Distances from Explosive and Flammable Hazards. Prepared by the Office of Environment and Energy, Environmental Planning Division, Department of Housing and Urban Development. Washington, DC.

U.S. DOT, FEMA and U.S. EPA. Handbook of Chemical Hazard Analysis Procedures.

U.S. DOT, FEMA and U.S. EPA. Technical Guidance for Hazards Analysis: Emergency Planning for Extremely Hazardous Substances.

The National Response Team. 1987. Hazardous Materials Emergency Planning Guide. Washington, DC.

The National Response Team. 1990. Oil Spill Contingency Planning, National Status: A Report to the President. Washington, DC. U.S. Government Printing Office.

Offshore Inspection and Enforcement Division. 1988. Minerals Management Service, Offshore Inspection Program: National Potential Incident of Noncompliance (PINC) List. Reston, VA.

ATTACHMENTS TO APPENDIX F

ATTACHMENT F–1—RESPONSE PLAN COVER SHEET

This cover sheet will provide EPA with basic information concerning the facility. It must accompany a submitted facility response plan. Explanations and detailed instructions can be found in Appendix F. Please type or write legibly in blue or black ink. Public reporting burden for the collection of this information is estimated to vary from 1 hour to 270 hours per response in the first year, with an average of 5 hours per response. This estimate includes time for reviewing instructions, searching existing data sources, gathering the data needed, and completing and reviewing the collection of information. Send comments regarding the burden estimate of this information, including suggestions for reducing this burden to: Chief, Information Policy Branch, PM–223, U.S. Environmental Protection Agency, 401 M St., SW., Washington, D.C. 20460; and to the Office of Information and Regulatory Affairs, Office of Management and Budget, Washington D.C. 20503.

GENERAL INFORMATION

Owner/Operator of Facility:

Facility Name: _____

Facility Address (street address or route):

City, State, and U.S. Zip Code:

Facility Phone No.: _____

Latitude (Degrees: North):

degrees, minutes, seconds

Dun & Bradstreet Number:[1]

Largest Aboveground Oil Storage Tank Capacity (Gallons):

Number of Aboveground Oil Storage Tanks:

Longitude (Degrees: West):

degrees, minutes, seconds _____

Standard Industrial Classification (SIC) Code:[1] _____

Maximum Oil Storage Capacity (Gallons): —

Worst Case Oil Discharge Amount (Gallons):

Facility Distance to Navigable Water. Mark the appropriate line. _____

0–¼ mile ____ ¼–½ mile ____ ½–1 mile ____ >1 mile ____

APPLICABILITY OF SUBSTANTIAL HARM CRITERIA

Does the facility transfer oil over-water[2] to or from vessels and does the facility have a total oil storage capacity greater than or equal to 42,000 gallons?

Yes _____

No _____

Does the facility have a total oil storage capacity greater than or equal to 1 million gallons and, within any storage area, does the facility lack secondary containment[2] that is sufficiently large to contain the capacity of the largest aboveground oil storage tank plus sufficient freeboard to allow for precipitation?

Yes _____

No _____

Does the facility have a total oil storage capacity greater than or equal to 1 million gallons and is the facility located at a distance[2] (as calculated using the appropriate formula in Appendix C or a comparable formula) such that a discharge from the facility could cause injury to fish and wildlife and sensitive environments?[3]

Yes _____

No _____

Does the facility have a total oil storage capacity greater than or equal to 1 million gallons and is the facility located at a distance[2] (as calculated using the appropriate

[1] These numbers may be obtained from public library resources.

[2] Explanations of the above-referenced terms can be found in Appendix C to this part. If a comparable formula to the ones contained in Attachment C–III is used to establish the appropriate distance to fish and wildlife and sensitive environments or public drinking water intakes, documentation of the reliability and analytical soundness of the formula must be attached to this form.

[3] For further description of fish and wildlife and sensitive environments, see Appendices I, II, and III to DOC/NOAA's ''Guidance for Facility and Vessel Response Plans: Fish and Wildlife and Sensitive Environments'' (see Appendix E to this part, section 10, for availability) and the applicable ACP.

formula in Appendix C or a comparable formula) such that a discharge from the facility would shut down a public drinking water intake?[2] _____

Yes _____

No _____

Does the facility have a total oil storage capacity greater than or equal to 1 million gallons and has the facility experienced a reportable oil spill[2] in an amount greater than or equal to 10,000 gallons within the last 5 years?

Yes _____

No _____

CERTIFICATION

I certify under penalty of law that I have personally examined and am familiar with the information submitted in this document, and that based on my inquiry of those individuals responsible for obtaining information, I believe that the submitted information is true, accurate, and complete.

Signature: _____

Name (Please type or print): _____

_____

Title: _____

Date: _____

[59 FR 34122, July 1, 1994; 59 FR 49006, Sept. 26, 1994]

PART 113—LIABILITY LIMITS FOR SMALL ONSHORE STORAGE FACILITIES

Subpart A—Oil Storage Facilities

Sec.
113.1 Purpose.
113.2 Applicability.
113.3 Definitions.
113.4 Size classes and associated liability limits for fixed onshore oil storage facilities, 1,000 barrels or less capacity.
113.5 Exclusions.
113.6 Effect on other laws.

AUTHORITY: Sec. 311(f)(2), 86 Stat. 867 (33 U.S.C. 1251 (1972)).

SOURCE: 38 FR 25440, Sept. 13, 1973, unless otherwise noted.

Subpart A—Oil Storage Facilities

§113.1 Purpose.

This subpart establishes size classifications and associated liability limits for small onshore oil storage facilities with fixed capacity of 1,000 barrels or less.

§113.2 Applicability.

This subpart applies to all onshore oil storage facilities with fixed capacity of 1,000 barrels or less. When a discharge to the waters of the United States occurs from such facilities and when removal of said discharge is performed by the United States Government pursuant to the provisions of subsection 311(c)(1) of the Act, the liability of the owner or operator and the facility will be limited to the amounts specified in §113.4.

§113.3 Definitions.

As used in this subpart, the following terms shall have the meanings indicated below:

(a) *Aboveground* storage facility means a tank or other container, the bottom of which is on a plane not more than 6 inches below the surrounding surface.

(b) *Act* means the Federal Water Pollution Control Act, as amended, 33 U.S.C. 1151, *et seq.*

(c) *Barrel* means 42 United States gallons at 60 degrees Fahrenheit.

(d) *Belowground* storage facility means a tank or other container located other than as defined as ''Aboveground''.

(e) *Discharge* includes, but is not limited to any spilling, leaking, pumping, pouring, emitting, emptying or dumping.

(f) *Onshore Oil Storage Facility* means any facility (excluding motor vehicles and rolling stock) of any kind located in, on, or under, any land within the United States, other than submerged land.

(g) *On-Scene Coordinator* is the single Federal representative designated pursuant to the National Oil and Hazardous Substances Pollution Contingency Plan and identified in approved Regional Oil and Hazardous Substances Pollution Contingency Plans.

(h) *Oil* means oil of any kind or in any form, including but no limited to, petroleum, fuel oil, sludge, oil refuse, and oil mixed with wastes other than dredged spoil.

(i) *Remove* or *removal* means the removal of the oil from the water and shorelines or the taking of such other

actions as the Federal On-Scene Coordinator may determine to be necessary to minimize or mitigate damage to the public health or welfare, including but not limited to, fish, shellfish, wildlife, and public and private property, shorelines, and beaches.

Additionally, the terms not otherwise defined herein shall have the meanings assigned them by section 311(a) of the Act.

§ 113.4 Size classes and associated liability limits for fixed onshore oil storage facilities, 1,000 barrels or less capacity.

Unless the United States can show that oil was discharged as a result of willful negligence or willful misconduct within the privity and knowledge of the owner or operator, the following limits of liability are established for fixed onshore facilities in the classes specified:

(a) Aboveground storage.

Size class	Capacity (barrels)	Limit (dollars)
I	Up to 10	4,000
II	11 to 170	60,000
III	171 to 500	150,000
IV	501 to 1,000	200,000

(b) Belowground storage.

Size class	Capacity (barrels)	Limit (dollars)
I	Up to 10	5,200
II	11 to 170	78,000
III	171 to 500	195,000
IV	501 to 1,000	260,000

§ 113.5 Exclusions.

This subpart does not apply to:

(a) Those facilities whose average daily oil throughout is more than their fixed oil storage capacity.

(b) Vehicles and rolling stock.

§ 113.6 Effect on other laws.

Nothing herein shall be construed to limit the liability of any facility under State or local law or under any Federal law other than section 311 of the Act, nor shall the liability of any facility for any charges or damages under State or local law reduce its liability to the Federal Government under section 311 of the Act, as limited by this subpart.

PART 116—DESIGNATION OF HAZARDOUS SUBSTANCES

Sec.
116.1 Applicability.
116.2 Abbreviations.
116.3 Definitions.
116.4 Designation of hazardous substances.

AUTHORITY: Secs. 311(b)(2)(A) and 501(a), Federal Water Pollution Control Act (33 U.S.C. 1251 et seq.).

§ 116.1 Applicability.

This regulation designates hazardous substances under section 311(b)(2)(A) of the Federal Water Pollution Control Act (the Act). The regulation applies to discharges of substances designated in Table 116.4.

[43 FR 10474, Mar. 13, 1978]

§ 116.2 Abbreviations.

ppm=parts per million
mg=milligram(s)
kg=kilogram(s)
mg/l=milligrams(s) per liter= (approx.) ppm
mg/kg=milligram(s) per kilogram= (approx.) ppm

[43 FR 10474, Mar. 13, 1978]

§ 116.3 Definitions.

As used in this part, all terms shall have the meaning defined in the Act and as given below:

The Act means the Federal Water Pollution Control Act, as amended by the Federal Water Pollution Control Act Amendments of 1972 (Pub. L. 92–500), and as further amended by the Clean Water Act of 1977 (Pub. L. 95–217), 33 U.S.C. 1251 et seq.; and as further amended by the Clean Water Act Amendments of 1978 (Pub. L. 95–676);

Animals means appropriately sensitive animals which carry out respiration by means of a lung structure permitting gaseous exchange between air and the circulatory system;

Aquatic animals means appropriately sensitive wholly aquatic animals which carry out respiration by means of a gill structure permitting gaseous exchange between the water and the circulatory system;

Aquatic flora means plant life associated with the aquatic eco-system including, but not limited to, algae and higher plants;

Contiguous zone means the entire zone established or to be established by the United States under article 24 of the Convention of the Territorial Sea and the Contiguous Zone;

Discharge includes, but is not limited to, any spilling, leaking, pumping, pouring, emitting, emptying or dumping, but excludes (A) discharges in compliance with a permit under section 402 of this Act, (B) discharges resulting from circumstances identified and reviewed and made a part of the public record with respect to a permit issued or modified under section 402 of this Act, and subject to a condition in such permit, and (C) continuous or anticipated intermittent discharges from a point source, identified in a permit or permit application under section 402 of this Act, which are caused by events occurring within the scope of relevant operating or treatment systems;

LC50 means that concentration of material which is lethal to one-half of the test population of aquatic animals upon continuous exposure for 96 hours or less.

Mixture means any combination of two or more elements and/or compounds in solid, liquid, or gaseous form except where such substances have undergone a chemical reaction so as to become inseparable by physical means.

Navigable waters is defined in section 502(7) of the Act to mean ''waters of the United States, including the territorial seas,'' and includes, but is not limited to:

(1) All waters which are presently used, or were used in the past, or may be susceptible to use as a means to transport interstate or foreign commerce, including all waters which are subject to the ebb and flow of the tide, and including adjacent wetlands; the term *wetlands* as used in this regulation shall include those areas that are inundated or saturated by surface or ground water at a frequency and duration sufficient to support, and that under normal circumstances do support, a prevelance of vegetation typically adapted for life in saturated soil conditions. Wetlands generally include swamps, marshes, bogs and similar areas; the term *adjacent* means bordering, contiguous or neighboring;

(2) Tributaries of navigable waters of the United States, including adjacent wetlands;

(3) Interstate waters, including wetlands; and

(4) All other waters of the United States such as intrastate lakes, rivers, streams, mudflats, sandflats and wetlands, the use, degradation or destruction of which affect interstate commerce including, but not limited to:

(i) Intrastate lakes, rivers, streams, and wetlands which are utilized by interstate travelers for recreational or other purposes; and

(ii) Intrastate lakes, rivers, streams, and wetlands from which fish or shellfish are or could be taken and sold in interstate commerce; and

(iii) Intrastate lakes, rivers, streams, and wetlands which are utilized for industrial purposes by industries in interstate commerce.

Navigable waters do not include prior converted cropland. Notwithstanding the determination of an area's status as prior converted cropland by any other federal agency, for the purposes of the Clean Water Act, the final authority regarding Clean Water Act jurisdiction remains with EPA.

Offshore facility means any facility of any kind located in, on, or under, any of the navigable waters of the United States, and any facility of any kind which is subject to the jurisdiction of the United States and is located in, on, or under any other waters, other than a vessel or a public vessel;

Onshore facility means any facility (including, but not limited to, motor vehicles and rolling stock) of any kind located in, on, or under, any land within the United States other than submerged land;

Otherwise subject to the jurisdiction of the United States means subject to the jurisdiction of the United States by virtue of United States citizenship, United States vessel documentation or numbering, or as provided for by international agreement to which the United States is a party.

A discharge *in connection with activities under the Outer Continental Shelf Lands Act or the Deepwater Port Act of*

1974, or which may affect natural resources belonging to, appertaining to, or under the exclusive management authority of the United States (including resources under the Fishery Conservation and Management Act of 1976), means: (1) A discharge into any waters beyond the contiguous zone from any vessel or onshore or offshore facility, which vessel or facility is subject to or is engaged in activities under the Outer Continental Shelf Lands Act or the Deepwater Port Act of 1974, and (2) any discharge into any waters beyond the contiguous zone which contain, cover, or support any natural resource belonging to, appertaining to, or under the exclusive management authority of the United States (including resources under the Fishery Conservation and Management Act of 1976).

Public vessel means a vessel owned or bareboat-chartered and operated by the United States, or a State or political subdivision thereof, or by a foreign nation, except when such vessel is engaged in commerce.

Territorial seas means the belt of the seas measured from the line of ordinary low water along that portion of the coast which is in direct contact with the open sea and the line marking the seaward limit of inland waters, and extending seaward a distance of 3 miles.

Vessel means every description of watercraft or other artificial contrivance used, or capable of being used, as a means of transportation on water other than a public vessel;

[43 FR 10474, Mar. 13, 1978; 43 FR 27533, June 26, 1978, as amended at 44 FR 10266, Feb. 16, 1979; 58 FR 45039, Aug. 25, 1993]

§ 116.4 Designation of hazardous substances.

The elements and compounds appearing in Tables 116.4 A and B are designated as hazardous substances in accordance with section 311(b)(2)(A) of the Act. This designation includes any isomers and hydrates, as well as any solutions and mixtures containing these substances. Synonyms and Chemical Abstract System (CAS) numbers have been added for convenience of the user only. In case of any disparity the common names shall be considered the designated substance.

TABLE 116.4A—LIST OF HAZARDOUS SUBSTANCES

Common name	CAS No.	Synonyms	Isomers	CAS No.
Acetaldehyde	75070	Ethanal, ethyl aldehyde, acetic aldehyde		
Acetic acid	64197	Glacial acetic acid, vinegar acid		
Acetic anhydride	108247	Acetic oxide, acetyl oxide		
Acetone cyanohydrin	75865	2-methyllactonitrile, alpha-hydroxyisobutyronitrile.		
Acetyl bromide	506967			
Acetyl chloride	79367			
Acrolein	107028	2-propenal, acrylic aldehyde, acrylaldehyde, acraldehyde.		
Acrylonitrile	107131	Cyanoethylene, Fumigrain, Ventox, propeneitrile, vinyl cyanide.		
Adipic acid	124049	Hexanedioic acid		
Aldrin	309002	Octalene, HHDN		
Allyl alcohol	107186	2-propen-1-ol, 1-propenol-3, vinyl carbinol		
Allyl chloride	107051	3-chloropropene, 3-chloropropylene, Chlorallylene.		
Aluminum sulfate	10043013	Alum		
Ammonia	7664417			
Ammonium acetate	631618	Acetic acid ammonium, salt		
Ammonium benzoate	1863634			
Ammonium bicarbonate	1066337	Acid ammonium carbonate, ammonium hydrogen carbonate.		
Ammonium bichromate	7789095			
Ammonium bifluoride	1341497	Acid ammonium fluoride, ammonium hydrogen fluoride.		
Ammonium bisulfite	10192300			
Ammonium carbamate	1111780	Ammonium aminoformate		
Ammonium carbonate	506876			
Ammonium chloride	12125029	Ammonium muriate, sal ammoniac, salmiac, Amchlor.		
Ammonium chromate	7788989			
Ammonium citrate dibasic	3012655	Diammonium citrate, citric acid diammonium salt.		

TABLE 116.4A—LIST OF HAZARDOUS SUBSTANCES—Continued

Common name	CAS No.	Synonyms	Isomers	CAS No.
Ammonium fluoborate	13826830	Ammonium fluoroborate, ammonium borofluoride.		
Ammonium fluoride	12125018	Neutral ammonium fluoride		
Ammonium hydroxide	1336216			
Ammonium oxalate	6009707			
	5972736			
	14258492			
Ammonium silicofluoride	16919190	Ammonium fluosilicate		
Ammonium sulfamate	7773060	Ammate, AMS, ammonium amidosulfate		
Ammonium sulfide	12135761			
Ammonium sulfite	10196040			
	10192300			
Ammonium tartrate	3164292	Tartaric acid ammonium salt		
	14307438			
Ammonium thiocyanate	1762954	Ammonium rhodanide, ammonium sulfocyanate, ammonium sulfocyanide.		
Amly acetate	628637	Amylacetic ester	iso-	123922
		Pear oil	sec-	626380
		Banana oil	tert-	625161
Aniline	62533	Aniline oil, phenylamine, aminobenzene, aminophen, kyanol.		
Antimony pentachloride	7647189			
Antimony potassium tartrate	28300745	Tartar emetic, tartrated antimony, tartarized antimony, potassium antimonyltartrate.		
Antimony tribromide	7789619			
Antimony trichloride	10025919	Butter of antimony		
Antimony trifluoride	7783564	Antimony fluoride		
Antimony trioxide	1309644	Diantimony trioxide, flowers of antimony		
Arsenic disulfide	1303328	Red arsenic sulfide		
Arsenic pentoxide	1303282	Arsenic acid anhydride, arsenic oxide		
Arsenic trichloride	7784341	Arsenic chloride, arsenious chloride, arsenous chloride, butter of arsenic.		
Arsenic trioxide	1327533	Arsenious acid, arsenious oxide, white arsenic		
Arsenic trisulfide	1303339	Arsenious sulfide, yellow arsenic sulfide		
Barium cyanide	542621			
Benzene	71432	Cyclohexatriene, benzol		
Benzoic acid	65850	Benzenecarboxylic acid, phenylformic acid, dracylic acid.		
Benzonitrile	100470	Phenyl cyanide, cyanobenzene		
Benzoyl chloride	98884	Benzenecarbonyl chloride		
Benzyl chloride	100447			
Beryllium chloride	7787475			
Beryllium fluoride	7787497			
Beryllium nitrate	7787555			
	13597994			
Butyl acetate	123864	Acetic acid butyl ester	iso-	110190
			sec-	105464
			tert-	540885
Butylamine	109739	1-aminobutane	iso-	78819
			sec-	513495
			sec-	13952846
			tert-	75649
n/butyl phthalate	84742	1.2-benzenedicarboxylic acid, dibutyl ester, dibutyl phthalate.		
Butyric acid	107926	Butanoic acid, ethylacetic acid	iso-	79312
Cadmium acetate	543908			
Cadmium bromide	7789426			
Cadmium chloride	10108642			
Calcium arsenate	7778441	Tricalcium orthoarsenate		
Calcium arsenite	52740166			
Calcium carbide	75207	Carbide, acetylenogen		
Calcium chromate	13765190	Calcium chrome yellow, geblin, yellow ultra-marine.		
Calcium cyanide	592018			
Calcium dodecylbenzenesulfonate	26264062			
Calcium hypochlorite	7778543			
Captan	133062	Orthocide-406, SR–406, Vancide-89		
Carbaryl	63252	Sevin		
Carbofuran	1563662	Furadan		
Carbon disulfide	75150	Carbon bisulfide, dithiocarbonic anhydride		
Carbon tetrachloride	56235	Tetrachloromethane Perchloromethane		
Chlordane	57749	Toxichlor, chlordan		

TABLE 116.4A—LIST OF HAZARDOUS SUBSTANCES—Continued

Common name	CAS No.	Synonyms	Isomers	CAS No.
Chlorine	75003			
Chlorobenzene	108907	Monochlorobenzene, benzene chloride		
Chloroform	67663	Trichloromethane		
Chlorpyrifos	2921882	Dursban		
Chlorosulfonic acid	7790945	Sulfuric chlorohydrin		
Chromic acetate	1066304			
Chromic acid	11115745	Chromic anhydride, chromium trioxide		
Chromic sulfate	10101538			
Chromous chloride	10049055			
Cobaltous bromide	7789437	Cobalt bromide		
Coabaltous formate	544183	Cobalt formate		
Cobaltous sulfamate	14017415	Cobalt sulfamate		
Coumaphos	56724	Co-Ral		
Cresol	1319773	Cresylic acid	m-	108394
		Hydroxytoluene	o-	95487
			p-	106445
Crotonaldehyde	4170303	2-butenal propylene aldelhyde		
Cupric acetate	142712	Copper acetate, crystalized verdigris		
Cupric acetoarsenite	12002038	Copper acetoarsenite, copper acetate arsenite, Paris green.		
Cupric chloride	7447394	Copper chloride		
Cupric nitrate	3251238	Copper nitrate		
Cupric oxalate	5893663	Copper oxalate		
Cupric sulfate	7758987	Copper sulfate		
Cupric sulfate, ammoniated	10380297	Ammoniated copper sulfate		
Cupric tartrate	815827	Copper tartrate		
Cyanogen chloride	506774			
Cyclohexane	110827	Hexahydrobenzene, hexamethylene, hexanaphthene.		
2,4-D acid	94757	2,4-dichlorophenoxyacetic acid		
2,4-D ester	94111	2,4-dichlorophenoxyacetic acid ester		
	94791			
	94804			
	1320189			
	1928387			
	1928616			
	1929733			
	2971382			
	25168267			
	53467111			
DDT	50293	p,p′-DDT		
Diazinon	333415	Dipofene, Diazitol, Basudin, Spectracide		
Dicamba	1918009	2-methoxy-3,6-dichlorobenzoic acid		
Dichlobenil	1194656	2,6-dichlorobenzonitrile, 2,6-DBN		
Dichlone	117806	Phygon, dichloronaphthoquinone		
Dichlorobenzene	25321226	Di-chloricide	Ortho	95501
		Paramoth (Para)	Para	106467
Dichloropropane	26638197	Propylene dichloride	1,1	78999
			1,2	78875
			1,3	142289
Dichloropropene	26952238		1,3	542756
			2,3	78886
Dichloropropene-dichloropropane (mixture).	8003198	D-D mixture Vidden D		
2,2-Dichloropropionic acid	75990	Dalapon		
Dichlorvos	62737	2,2-dichlorovinyl dimethyl phosphate, Vapona		
Dicofol	115322	Di(p-chlorophenyl)-trichloromethylcarbinol, DTMC, dicofol.		
Dieldrin	60571	Alvit		
Diethylamine	109897			
Dimethylamine	124403			
Dinitrobenzene (mixed)	25154545	Dinitrobenzol	m-	99650
			o-	528290
			p-	100254
Dinitrophenol	51285	Aldifen	(2,5-)	329715
			(2,4-).	
			(2,6-)	573568
Dinitrotoluene	25321146	DNT	2,4	121142
			2,6	606202
			3,4	610399
Diquat	85007	Aquacide		
	2764729	Dextrone, Reglone, Diquat dibromide		

TABLE 116.4A—LIST OF HAZARDOUS SUBSTANCES—Continued

Common name	CAS No.	Synonyms	Isomers	CAS No.
Disulfoton	298044	Di-syston		
Diuron	330541	DCMU, DMU		
Dodecylbenzenesulfonic acid	27176870			
Endosulfan	115297	Thiodan		
Endrin	72208	Mendrin, Compound 269		
Epichlorohydrin	106898	-chloropropylene oxide		
Ethion	563122	Nialate, ethyl methylene, phosphorodithioate		
Ethylbenzene	100414	Phenylethane		
Ethylenediamine	107153	1,2-diaminoethane		
Ethylenediamine-tetraacetic acid (EDTA).	60004	Edetic acid, Havidote, (ethylenedinitrilo)-tetraacetic acid.		
Ethylene dibromide	106934	1,2-dibromoethane acetylene dibromide sym-dibromoethylene.		
Ethylene dichloride	107062	1,2-dichloroethane sym-bichloroethane		
Ferric ammonium citrate	1185575	Ammonium ferric citrate		
Ferric ammonium oxalate	2944674	Ammonium ferric oxalate		
	55488874			
Ferric chloride	7705080	Flores martis, iron trichloride		
Ferric fluoride	7783508			
Ferric nitrate	10421484	Iron nitrate		
Ferric sulfate	10028225	Ferric persulfate, ferric sesquisulfate, ferric tersulfate.		
Ferrous ammonium sulfate	10045893	Mohr's salt, iron ammonium sulfate		
Ferrous chloride	7758943	Iron chloride, iron dichloride, iron protochloride		
Ferrous sulfate	7720787	Green vitriol		
	7782630	Iron vitriol, iron sulfate, iron protosulfate		
Formaldehyde	50000	Methyl aldehyde, methanal, formalin		
Formic acid	64186	Methanoic acid		
Fumaric acid	110178	Trans-butenedioic acid, trans-1,2-ethylenedicarboxylic acid, boletic acid, allomaleic acid.		
Furfural	98011	2-furaldehyde, pyromucic aldehyde		
Guthion	86500	Gusathion, azinphos-methyl		
Heptachlor	76448	Velsicol-104, Drinox, Heptagran		
Hexachlorocyclopentadiene	77474	Perchlorocyclopentadiene		
Hydrochloric acid	7647010	Hydrogen chloride, muriatic acid		
Hydrofluoric acid	7664393	Fluohydric acid		
Hydrogen cyanide	74908	Hydrocyanic acid		
Hydrogen sulfide	7783064	Hydrosulfuric acid sulfur hydride		
Isoprene	78795	2-methyl-1,3-butadiene		
Isopropanolamine dodecylbenzenesulfonate.	42504461			
Kepone	143500	Chlordecone 1,1a,3,3a,4,5,5,5a,5b,6-decachlorooctahydro-1,3,4-metheno-2H-cyclobuta(cd)pentalen-2-one.		
Lead acetate	301042	Sugar of lead		
Lead arsenate	7784409			
	7645252			
	10102484			
Lead chloride	7758954			
Lead fluoborate	13814965	Lead fluoroborate		
Lead fluoride	7783462	Lead difluoride, plumbous fluoride		
Lead iodide	10101630			
Lead nitrate	10099748			
Lead stearate	7428480	Stearic acid lead salt		
	1072351			
	52652592			
Lead sulfate	7446142			
Lead sulfide	1314870	Galena		
Lead thiocyanate	592870	Lead sulfocyanate		
Lindane	58899	Gamma-BHC, gamma-benzene hexachloride		
Lithium chromate	14307358			
Malathion	121755	Phospothion		
Maleic acid	110167	Cis-butenedioic acid, cis-1,2-ethylenedicarboxylic acid, toxilic acid.		
Maleic anhydride	108316	2,5-furandione, cis-butenedioic anhydride, toxilic anhydride.		
Mercaptodimethur	203657	Mesurol		
Mercuric cyanide	592041	Mercury cyanide		
Mercuric nitrate	10045940	Mercury nitrate, mercury pernitrate		
Mercuric sulfate	7783359	Mercury sulfate, mercury persulfate		
Mercuric thiocyanate	592858	Mercury thiocyanate, mercuric sulfocyanate, mercuric sulfocyanide.		

TABLE 116.4A—LIST OF HAZARDOUS SUBSTANCES—Continued

Common name	CAS No.	Synonyms	Isomers	CAS No.
Mercurous nitrate	7782867			
	10415755	Mercury protonitrate		
Methoxychlor	72435	DMDT, methoxy-DDT		
Methyl mercaptan	74931	Methanethiol, mercaptomethane, methyl sulfhydrate, thiomethyl alcohol.		
Methyl methacrylate	80626	Methacrylic acid methyl ester, methyl-2-methyl-2-propenoate.		
Methyl parathion	298000	Nitrox-80		
Mevinphos	7786347	Phosdrin		
Mexacarbate	315184	Zectran		
Monoethylamine	75047	Ethylamine, aminoethane		
Monomethylamine	74895	Methylamine, aminomethane		
Naled	300765	Dibrom		
Naphthalene	91203	White tar, tar camphor, naphthalin		
Naphthenic acid	1338245	Cyclohexanecarboxylic acid, hexahydrobenzoic acid.		
Nickel ammonium sulfate	15699180	Ammonium nickel sulfate		
Nickel chloride	37211055	Nickelous chloride		
	7718549			
Nickel hydroxide	12054487	Nickelous hydroxide		
Nickel nitrate	14216752			
Nickel sulfate	7786814	Nickelous sulfate		
Nitric acid	7697372	Aqua fortis		
Nitrobenzene	98953	Nitrobenzol, oil of mirbane		
Nitrogen dioxide	10102440	Nitrogen tetraoxide		
Nitrophenol (mixed)	25154556	Mononitrophenol	m-	554847
			o-	88755
			p-	100027
Nitrotoluene	1321126		Ortho	88722
			Meta	99081
			Para	99990
Paraformaldehyde	30525894	Paraform, Formagene, Triformol, polymerized formaldehyde, polyoxymethylene.		
Parathion	56382	DNTP, Niran		
Pentachlorophenol	87865	PCP, Penta		
Phenol	108952	Carbolic acid, phenyl hydroxide, hydroxybenzene, oxybenzene.		
Phosgene	75445	Diphosgene, carbonyl chloride, chloroformyl chloride.		
Phosphoric acid	7664382	Orthophosphoric acid		
Phosphorus	7723140	Black phosphorus, red phosphorus, white phosphorus, yellow phosphorus.		
Phosphorus oxychloride	10025873	Phosphoryl chloride, phosphorus chloride		
Phosphorus pentasulfide	1314803	Phosphoric sulfide, thiophosphoric anhydride, phosphorus persulfide.		
Phosphorus trichloride	7719122	Phosphorous chloride		
Polychorinated biphenyls	1336363	PCB, Aroclor, polychlorinated diphenyls		
Potassium arsenate	7784410			
Potassium arsenite	10124502	Potassium metaarsenite		
Potassium bichromate	7778509	Potassium dichromate		
Potassium chromate	7789006			
Potassium cyanide	151508			
Potassium hydroxide	1310583	Potassium hydrate, caustic potash, potassa		
Potassium permanganate	7722647	Chameleon mineral		
Propargite	2312358	Omite		
Propionic acid	79094	Propanoic acid, methylacetic acid, ethylformic acid.		
Propionic anhydride	123626	Propanoic anhydride, methylacetic anhydride		
Propylene oxide	75569	Propene oxide		
Pyrethrins	121299	Pyrethrin I		
	121211	Pyrethrin II		
Quinoline	91225	1-benzazine, benzo(b)pyridine, leuocoline, chinoleine, leucol.		
Resorcinol	108463	Resorcin, 1,3-benzenediol, meta-dihydroxybenzene.		
Selenium oxide	7446084	Selenium dioxide		
Silver nitrate	7761888	Nitric acid silver (1+) salt lunar caustic		
Sodium	7440235	Natrium		
Sodium arsenate	7631892	Disodium arsenate		
Sodium arsenite	7784465	Sodium metaarsenite		
Sodium bichromate	10588019	Sodium dichromate		
Sodium bifluoride	1333831			

TABLE 116.4A—LIST OF HAZARDOUS SUBSTANCES—Continued

Common name	CAS No.	Synonyms	Isomers	CAS No.
Sodium bisulfite	7631905	Sodium acid sulfite, sodium hydrogen sulfite		
Sodium chromate	7775113			
Sodium cyanide	143339			
Sodium dodecylbenzene-sulfonate	25155300			
Sodium fluoride	7681494	Villiaumite		
Sodium hydrosulfide	16721805	Sodium hydrogen sulfide		
Sodium hydroxide	1310732	Caustic soda, soda lye, sodium hydrate		
Sodium hypochlorite	7681529	Bleach		
	10022705			
Sodium methylate	124414	Sodium methoxide		
Sodium nitrite	7632000			
Sodium phosphate, dibasic	7558794			
	10039324			
	10140655			
Sodium phosphate, tribasic	7785844			
	7601549			
	10101890			
	10361894			
	7758294			
	10124568			
Sodium selenite	10102188			
	7782823			
Strontium chromate	7789062			
Strychnine	57249			
Styrene	100425	Vinylbenzene, phenylethylene, styrol, styrolene, cinnamene, cinnamol.		
Sulfuric acid	7664939	Oil of vitriol, oleum		
Sulfur monochloride	12771083	Sulfur chloride		
2,4,5-T acid	93765	2,4,5-trichlorophenoxyacetic acid		
2,4,5-T amines	6369966	Acetic acid (2,4,5-trichlorophenoxy)-compound with N,N-dimethylmethanamine (1:1).		
	6369977	Acetic acid (2,4,5-trichlorophenoxy)-compound with N-methylmethanamine (1:1).		
	1319728	Acetic acid (2,4,5-trichlorophenoxy)-compound with 1-amino-2-propanol (1:1).		
	3813147	Acetic acid (2,4,5-trichlorophenoxy)-compound with 2,2'2''-nitrilotris [ethanol] (1:1).		
2,4,5-T esters	2545597	2,4,5-trichlorophenoxyacetic esters		
	93798			
	61792072			
	1928478			
	25168154			
2,4,5–T salts	13560991	Acetic acid (2,4,5–trichlorophenoxy)-sodium salt.		
TDE	72548	DDD		
2,4,5–TP acid	93721	Propanoic acid 2–(2,4,5–trichlorophenoxy)		
2,4,5–TP esters	32534955	Propanoic acid, 2–(2,4,5–trichlorophenoxy)-, isooctyl ester.		
Tetraethyl lead	78002	Lead tetraethyl, TEL		
Tetraethyl pyrophosphate	107493	TEPP		
Thallium sulfate	10031591			
	7446186			
Toluene	108883	Toluol, methylbenzene, phenylmethane, Methacide.		
Toxaphene	8001352	Camphechlor		
Trichlorfon	52686	Dipterex		
		Dylox		
Trichlorethylene	79016	Ethylene trichloride		
Trichlorophenol	25167822	Collunosol, Dowicide 2 or 2S, Omal, Phenachlor.	(2,3,4-)	15950660
			(2,3,5-)	933788
			(2,3,6-)	933755
			(2,4,5-)	95954
			(2,4,6-)	88062
			(3,4,5-)	609198
Triethanolamine dodecylbenzenesulfonate.	27323417			
Triethylamine	121448			
Trimethylamine	75503	TMA		
Uranyl acetate	541093			
Uranyl nitrate	10102064			
	36478769			
Vanadium pentoxide	1314621	Vanadic anhydride, vanadic acid anhydride		

TABLE 116.4A—LIST OF HAZARDOUS SUBSTANCES—Continued

Common name	CAS No.	Synonyms	Isomers	CAS No.
Vanadyl sulfate	27774136	Vanadic sulfate, vanadium sulfate		
Vinyl acetate	108054	Acetic acid ethylene ether		
Vinylidene chloride	75354	1,1–dichlorethylene		
		1,1–dichloroethene		
Xylene (mixed)	1330207	Dimethylbenzene	m-	108383
		Xylol	o-	95476
			p-	106423
Xylenol	1300716	Dimethylphenol, hydroxydimethylbenzene		
Zinc acetate	557346			
Zinc ammonium chloride	14639975			
	14639986			
	52628258			
Zinc borate	1332076			
Zinc bromide	7699458			
Zinc carbonate	3486359			
Zinc chloride	7646857	Butter of zinc		
Zinc cyanide	557211			
Zinc fluoride	7783495			
Zinc formate	557415			
Zinc hydrosulfite	7779864			
Zinc nitrate	7779886			
Zinc phenolsulfonate	127822	Zinc sulfocarbolate		
Zinc phosphide	1314847			
Zinc silicofluoride	16871719	Zinc fluosilicate		
Zinc sulfate	7733020	White vitriol, zinc vitriol, white copperas		
Zirconium nitrate	13746899			
Zirconium potassium fluoride	16923958			
Zirconium sulfate	14644612	Disulfatozirconic acid		
Zirconium tetrachloride	10026116			

TABLE 116.4B—LIST OF HAZARDOUS SUBSTANCES BY CAS NUMBER

CAS No.	Common name
50000	Formaldehyde
50293	DDT
51285	2,4-Dinitrophenol
52686	Trichlorfon
56382	Parathion
56724	Coumaphos
57249	Strychnine
57749	Chlordane
58899	Lindane
60004	Ethylenediaminetetraacetic acid (EDTA)
60571	Dieldrin
62533	Aniline
62737	Dichlorvos
63252	Carbaryl
64186	Formic acid
64197	Acetic acid
65850	Benzoic acid
67663	Chloroform
71432	Benzene
72208	Endrin
72435	Methoxychlor
72548	TDE
74895	Monomethylamine
74908	Hydrogen cyanide
74931	Methyl mercaptan
75047	Monoethylamine
75070	Acetaldehyde
75150	Carbon disulfide
75207	Calcium carbide
75445	Phosgene
75503	Trimethylamine
75649	tert-Butylamine
75865	Acetone cyanohydrin
75990	2,2-Dichloropropionic acid
76448	Heptachlor

TABLE 116.4B—LIST OF HAZARDOUS SUBSTANCES BY CAS NUMBER—Continued

CAS No.	Common name
78002	Tetraethyl lead
78795	Isoprene
78819	iso-Butylamine
79094	Propionic acid
79312	iso-Butyric acid
79367	Acetyl chloride
80626	Methyl methacrylate
85007	Diquat
86500	Guthion
87865	Pentachlorophenol
88755	o-Nitrophenol
91203	Naphthalene
91225	Quinoline
93765	2,4,5–T acid
93798	2,4,5-T ester
94111	2,4–D ester
94757	2,4–D acid
94791	2,4–D ester
94804	2,4–D Butyl ester
95476	o-Xylene
95487	o–Cresol
98011	Furfural
98884	Benzoyl chloride
98953	Nitrobenzene
99650	m-Dinitrobenzene
100027	p-Nitrophenol
100254	p-Dinitrobenzene
100414	Ethylbenzene
100425	Styrene
100447	Benzyl chloride
100470	Benzonitrile
105464	sec-Butyl acetate
106423	p-Xylene
106445	p-Cresol
107028	Acrolein
107051	Allyl chloride

TABLE 116.4B—LIST OF HAZARDOUS SUBSTANCES BY CAS NUMBER—Continued

CAS No.	Common name
107131	Acrylonitrile
107153	Ethylenediamine
107186	Allyl alcohol
107493	Tetraethyl pyrophosphate
107926	n-Butyric acid
108054	Vinyl acetate
108247	Acetic anhydride
108316	Maleic anhydride
108383	m-Xylene
108394	m-Cresol
108463	Resorcinol
108883	Toluene
108907	Chlorobenzene
108952	Phenol
109739	n-Butylamine
109897	Diethylamine
110167	Maleic acid
110178	Fumaric acid
110190	iso-Butyl acetate
110827	Cyclohexane
115297	Endosulfan
115322	Dicofol
117806	Dichlone
121211	Pyrethrin
121299	Pyrethrin
121448	Triethylamine
121755	Malathion
123626	Propionic anhydride
123864	n-Butyl acetate
123922	iso-Amyl acetate
124403	Dimethylamine
124414	Sodium methylate
127822	Zinc phenolsulfonate
133062	Captan
142712	Cupric acetate
143339	Sodium cyanide
151508	Potassium cyanide
298000	Methyl parathion
298044	Disulfoton
300765	Naled
301042	Lead acetate
309002	Aldrin
315184	Mexacarbate
329715	2,5-Dinitrophenol
330541	Diuron
333415	Diazinon
506774	Cyanogen chloride
506876	Ammonium carbonate
506967	Acetyl bromide
513495	sec-Butylamine
528290	o-Dinitrobenzene
540885	tert-Butyl acetate
541093	Uranyl acetate
542621	Barium cyanide
543908	Cadmium acetate
544183	Cobaltous formate
554847	m-Nitrophenol
557211	Zinc cyanide
557346	Zinc acetate
557415	Zinc formate
563122	Ethion
573568	2,6-Dinitrophenol
592018	Calcium cyanide
592041	Mercuric cyanide
592858	Mercuric thiocyanate
592870	Lead thiocyanate
625161	tert-Amyl acetate
626380	sec-Amyl acetate
628637	n-Amyl acetate
631618	Ammonium acetate
815827	Cupric tartrate

TABLE 116.4B—LIST OF HAZARDOUS SUBSTANCES BY CAS NUMBER—Continued

CAS No.	Common name
1066304	Chromic acetate
1066337	Ammonium bicarbonate
1072351	Lead stearate
1111780	Ammonium carbamate
1185575	Ferric ammonium citrate
1194656	Dichlobenil
1300716	Xylenol
1303282	Arsenic pentoxide
1303328	Arsenic disulfide
1303339	Arsenic trisulfide
1309644	Antimony trioxide
1310583	Potassium hydroxide
1310732	Sodium hydroxide
1314621	Vanadium pentoxide
1314803	Phosphorus pentasulfide
1314847	Zinc phosphide
1314870	Lead sulfide
1319773	Cresol (mixed)
1320189	2,4-D ester
1327533	Arsenic trioxide
1330207	Xylene
1332076	Zinc borate
1333831	Sodium bifluoride
1336216	Ammonium hydroxide
1336363	Polychlorinated biphenyls
1338245	Naphthenic acid
1341497	Ammonium bifluoride
1762954	Ammonium thiocyanate
1863634	Ammonium benzoate
1918009	Dicamba
1928387	2,4-D esters
1928478	2,4,5-T ester
1928616	2,4-D ester
1929733	2,4-D ester
2545597	2,4,5-T ester
2764729	Diquat
2921882	Chlorpyrifos
2944674	Ferric ammonium oxalate
2971382	2,4-D ester
3012655	Ammonium citrate, dibasic
3164292	Ammonium tartrate
3251238	Cupric nitrate
3486359	Zinc carbonate
5893663	Cupric oxalate
5972736	Ammonium oxalate
6009707	Ammonium oxalate
6369966	2,4,5-T ester
7428480	Lead stearate
7440235	Sodium
7446084	Selenium oxide
7446142	Lead sulfate
7447394	Cupric chloride
7558794	Sodium phosphate, dibasic
7601549	Sodium phosphate, tribasic
7631892	Sodium arsenate
7631905	Sodium bisulfite
7632000	Sodium nitrite
7645252	Lead arsenate
7646857	Zinc chloride
7647010	Hydrochloric acid
7647189	Antimony pentachloride
7664382	Phosphoric acid
7664393	Hydrofluoric acid
7664417	Ammonia
7664939	Sulfuric acid
7681494	Sodium fluoride
7681529	Sodium hypochlorite
7697372	Nitric acid
7699458	Zinc bromide
7705080	Ferric chloride
7718549	Nickel chloride

TABLE 116.4B—LIST OF HAZARDOUS SUBSTANCES BY CAS NUMBER—Continued

CAS No.	Common name
7719122	Phosphorus trichloride
7720787	Ferrous sulfate
7722647	Potassium permanganate
7723140	Phosphorus
7733020	Zinc sulfate
7758294	Sodium phosphate, tribasic
7758943	Ferrous chloride
7758954	Lead chloride
7758987	Cupric sulfate
7773060	Ammonium sulfamate
7775113	Sodium chromate
7778441	Calcium arsenate
7778509	Potassium bichromate
7778543	Calcium hypochlorite
7779864	Zinc hydrosulfite
7779886	Zinc nitrate
7782505	Chlorine
7782630	Ferrous sulfate
7782823	Sodium selenite
7782867	Mercurous nitrate
7783359	Mercuric sulfate
7783462	Lead fluoride
7783495	Zinc fluoride
7783508	Ferric fluoride
7783564	Antimony trifluoride
7784341	Arsenic trichloride
7784409	Lead arsenate
7784410	Potassium arsenate
7784465	Sodium arsenite
7785844	Sodium phosphate, tribasic
7786347	Mevinphos
7786814	Nickel sulfate
7787475	Beryllium chloride
7787497	Beryllium fluoride
7787555	Beryllium nitrate
7788989	Ammonium chromate
7789006	Potassium chromate
7789062	Strontium chromate
7789095	Ammonium bichromate
7789426	Cadmium bromide
7789437	Cobaltous bromide
7789619	Antimony tribromide
7790945	Chlorosulfonic acid
8001352	Toxaphene
10022705	Sodium hypochlorite
10025873	Phosphorus oxychloride
10025919	Antimony trichloride
10026116	Zirconium tetrachloride
10028225	Ferric sulfate
10028247	Sodium phosphate, dibasic
10039324	Sodium phosphate, dibasic
10043013	Aluminum sulfate
10045893	Ferrous ammonium sulfate
10045940	Mercuric nitrate
10049055	Chromous chloride
10099748	Lead nitrate
10101538	Chromic sulfate
10101630	Lead iodide
10101890	Sodium phosphate, tribasic
10102064	Uranyl nitrate
10102188	Sodium selenite
10102440	Nitrogen dioxide
10102484	Lead arsenate
10108642	Cadmium chloride
10124502	Potassium arsenite
10124568	Sodium phosphate, tribasic
10140655	Sodium phosphate, dibasic
10192300	Ammonium bisulfite
10196040	Ammonium sulfite
10361894	Sodium phosphate, tribasic
10380297	Cupric sulfate, ammoniated

TABLE 116.4B—LIST OF HAZARDOUS SUBSTANCES BY CAS NUMBER—Continued

CAS No.	Common name
10415755	Mercurous nitrate
10421484	Ferric nitrate
10588019	Sodium bichromate
11115745	Chromic acid
12002038	Cupric acetoarsenite
12054487	Nickel hydroxide
12125018	Ammonium fluoride
12125029	Ammonium chloride
12135761	Ammonium sulfide
12771083	Sulfur chloride
13597994	Beryllium nitrate
13746899	Zirconium nitrate
13765190	Calcium chromate
13814965	Lead fluoborate
13826830	Ammonium fluoborate
13952846	sec-Butylamine
14017415	Cobaltous sulfamate
14216752	Nickel nitrate
14258492	Ammonium oxalate
14307358	Lithium chromate
14307438	Ammonium tartrate
14639975	Zinc ammonium chloride
14639986	Zinc ammonium chloride
14644612	Zirconium sulfate
15699180	Nickel ammonium sulfate
16721805	Sodium hydrosulfide
16871719	Zinc silicofluoride
16919190	Ammonium silicofluoride
16923958	Zirconium potassium fluoride
25154545	Dinitrobenzene
25154556	Nitrophenol
25155300	Sodium dodecylbenzenesulfonate
25167822	Trichlorophenol
25168154	2,4,5-T ester
25168267	2,4-D ester
26264062	Calcium dodecylbenzenesulfonate
27176870	Dodecylbenzenesulfonic acid
27323417	Triethanolamine dodecylbenzenesulfonate
27774136	Vanadyl sulfate
28300745	Antimony potassium tartrate
30525894	Paraformaldehyde
36478769	Uranyl nitrate
37211055	Nickel chloride
42504461	Dodecylbenzenesulfonate isopropanolamine
52628258	Zinc ammonium chloride
52740166	Calcium arsenite
53467111	2,4-D ester
55488874	Ferric ammonium oxalate
61792072	2,4,5-T ester

[43 FR 10474, Mar. 13, 1978; 43 FR 27533, June 26, 1978, as amended at 44 FR 10268, Feb. 16, 1979; 44 FR 65400, Nov. 13, 1979; 44 FR 66602, Nov. 20, 1979; 54 FR 33482, Aug. 14, 1989]

PART 117—DETERMINATION OF REPORTABLE QUANTITIES FOR HAZARDOUS SUBSTANCES

Subpart A—General Provisions

Sec.

117.1 Definitions.
117.2 Abbreviations.
117.3 Determination of reportable quantities.

Subpart B—Applicability

117.11 General applicability.
117.12 Applicability to discharges from facilities with NPDES permits.
117.13 Applicability to discharges from publicly owned treatment works and their users.
117.14 Demonstration projects.

Subpart C—Notice of Discharge of a Reportable Quantity

117.21 Notice.
117.23 Liabilities for removal.

AUTHORITY: Secs. 311 and 501(a), Federal Water Pollution Control Act (33 U.S.C. 1251 et seq.), (''the Act'') and Executive Order 11735, superseded by Executive Order 12777, 56 FR 54757.

SOURCE: 44 FR 50776, Aug. 29, 1979, unless otherwise noted.

Subpart A—General Provisions

§117.1 Definitions.

As used in this part, all terms shall have the meanings stated in 40 CFR part 116.

(a) *Reportable quantities* means quantities that may be harmful as set forth in §117.3, the discharge of which is a violation of section 311(b)(3) and requires notice as set forth in §117.21.

(b) *Administrator* means the Administrator of the Environmental Protection Agency (''EPA'').

(c) *Mobile source* means any vehicle, rolling stock, or other means of transportation which contains or carries a reportable quantity of a hazardous substance.

(d) *Public record* means the NPDES permit application or the NPDES permit itself and the ''record for final permit'' as defined in 40 CFR 124.122.

(e) *National Pretreatment Standard* or *Pretreatment Standard* means any regulation containing pollutant discharge limits promulgated by the EPA in accordance with section 307 (b) and (c) of the Act, which applies to industrial users of a publicly owned treatment works. It further means any State or local pretreatment requirement applicable to a discharge and which is incorporated into a permit issued to a publicly owned treatment works under section 402 of the Act.

(f) *Publicly Owned Treatment Works* or *POTW* means a treatment works as defined by section 212 of the Act, which is owned by a State or municipality (as defined by section 502(4) of the Act). This definition includes any sewers that convey wastewater to such a treatment works, but does not include pipes, sewers or other conveyances not connected to a facility providing treatment. The term also means the municipality as defined in section 502(4) of the Act, which has jurisdiction over the indirect discharges to and the discharges from such a treatment works.

(g) *Remove* or *removal* refers to removal of the oil or hazardous substances from the water and shoreline or the taking of such other actions as may be necessary to minimize or mitigate damage to the public health or welfare, including, but not limited to, fish, shellfish, wildlife, and public and private property, shorelines, and beaches.

(h) *Contiguous zone* means the entire zone established by the United States under Article 24 of the Convention on the Territorial Sea and Contiguous Zone.

(i) *Navigable waters* means ''waters of the United States, including the territorial seas.'' This term includes:

(1) All waters which are currently used, were used in the past, or may be susceptible to use in interstate or foreign commerce, including all waters which are subject to the ebb and flow of the tide;

(2) Interstate waters, including interstate wetlands;

(3) All other waters such as intrastate lakes, rivers, streams, (including intermittent streams), mudflats, sandflats, and wetlands, the use, degradation or destruction of which would affect or could affect interstate or foreign commerce including any such waters:

(i) Which are or could be used by interstate or foreign travelers for recreational or other purposes;

(ii) From which fish or shellfish are or could be taken and sold in interstate or foreign commerce;

(iii) Which are used or could be used for industrial purposes by industries in interstate commerce;

(4) All impoundments of waters otherwise defined as navigable waters under this paragraph;

(5) Tributaries of waters identified in paragraphs (i) (1) through (4) of this section, including adjacent wetlands; and

(6) Wetlands adjacent to waters identified in paragraphs (i) (1) through (5) of this section (''Wetlands'' means those areas that are inundated or saturated by surface or ground water at a frequency and duration sufficient to support, and that under normal circumstances do support, a prevalence of vegetation typically adapted for life in saturated soil conditions. Wetlands generally included playa lakes, swamps, marshes, bogs, and similar areas such as sloughs, prairie potholes, wet meadows, prairie river overflows, mudflats, and natural ponds): *Provided*, That waste treatment systems (other than cooling ponds meeting the criteria of this paragraph) are not waters of the United States.

Navigable waters do not include prior converted cropland. Notwithstanding the determination of an area's status as prior converted cropland by any other federal agency, for the purposes of the Clean Water Act, the final authority regarding Clean Water Act jurisdiction remains with EPA.

(j) *Process waste water* means any water which, during manufacturing or processing, comes into direct contact with or results from the production or use of any raw material, intermediate product, finished product, byproduct, or waste product.

[44 FR 50776, Aug. 29, 1979, as amended at 58 FR 45039, Aug. 25, 1993]

§ 117.2 Abbreviations.

NPDES equals National Pollutant Discharge Elimination System. RQ equals reportable quantity.

§ 117.3 Determination of reportable quantities.

Each substance in Table 117.3 that is listed in Table 302.4, 40 CFR part 302, is assigned the reportable quantity listed in Table 302.4 for that substance.

TABLE 117.3—REPORTABLE QUANTITIES OF HAZARDOUS SUBSTANCES DESIGNATED PURSUANT TO SECTION 311 OF THE CLEAN WATER ACT

NOTE: The first number under the column headed ''RQ'' is the reportable quantity in pounds. The number in parentheses is the metric equivalent in kilograms. For convenience, the table contains a column headed ''Category'' which lists the code letters ''X'', ''A'', ''B'', ''C'', and ''D'' associated with reportable quantities of 1, 10, 100, 1000, and 5000 pounds, respectively.

TABLE 117.3—REPORTABLE QUANTITIES OF HAZARDOUS SUBSTANCES DESIGNATED PURSUANT TO SECTION 311 OF THE CLEAN WATER ACT

Material	Category	RQ in pounds (kilograms)
Acetaldehyde	C	1,000 (454)
Acetic acid	D	5,000 (2,270)
Acetic anhydride	D	5,000 (2,270)
Acetone cyanohydrin	A	10 (4.54)
Acetyl bromide	D	5,000 (2,270)
Acetyl chloride	D	5,000 (2,270)
Acrolein	X	1 (0.454)
Acrylonitrile	B	100 (45.4)
Adipic acid	D	5,000 (2,270)
Aldrin	X	1 (0.454)
Allyl alcohol	B	100 (45.4)
Allyl chloride	C	1,000 (454)
Aluminum sulfate	D	5,000 (2,270)
Ammonia	B	100 (45.4)
Ammonium acetate	D	5,000 (2,270)
Ammonium benzoate	D	5,000 (2,270)
Ammonium bicarbonate	D	5,000 (2,270)
Ammonium bichromate	A	10 (4.54)
Ammonium bifluoride	B	100 (45.4)
Ammonium bisulfite	D	5,000 (2,270)
Ammonium carbamate	D	5,000 (2,270)
Ammonium carbonate	D	5,000 (2,270)
Ammonium chloride	D	5,000 (2,270)
Ammonium chromate	A	10 (4.54)
Ammonium citrate dibasic	D	5,000 (2,270)

TABLE 117.3—REPORTABLE QUANTITIES OF HAZARDOUS SUBSTANCES DESIGNATED PURSUANT TO SECTION 311 OF THE CLEAN WATER ACT—Continued

Material	Category	RQ in pounds (kilograms)
Ammonium fluoborate	D	5,000 (2,270)
Ammonium fluoride	B	100 (45.4)
Ammonium hydroxide	C	1,000 (454)
Ammonium oxalate	D	5,000 (2,270)
Ammonium silicofluoride	C	1,000 (454)
Ammonium sulfamate	D	5,000 (2,270)
Ammonium sulfide	B	100 (45.4)
Ammonium sulfite	D	5,000 (2,270)
Ammonium tartrate	D	5,000 (2,270)
Ammonium thiocyanate	D	5,000 (2,270)
Amyl acetate	D	5,000 (2,270)
Aniline	D	5,000 (2,270)
Antimony pentachloride	C	1,000 (454)
Antimony potassium tartrate	B	100 (45.4)
Antimony tribromide	C	1,000 (454)
Antimony trichloride	C	1,000 (454)
Antimony trifluoride	C	1,000 (454)
Antimony trioxide	C	1,000 (454)
Arsenic disulfide	X	1 (0.454)
Arsenic pentoxide	X	1 (0.454)
Arsenic trichloride	X	1 (0.454)
Arsenic trioxide	X	1 (0.454)
Arsenic trisulfide	X	1 (0.454)
Barium cyanide	A	10 (4.54)
Benzene	A	10 (4.54)
Benzoic acid	D	5,000 (2,270)
Benzonitrile	D	5,000 (2,270)
Benzoyl chloride	C	1,000 (454)
Benzyl chloride	B	100 (45.4)
Beryllium chloride	X	1 (0.454)
Beryllium fluoride	X	1 (0.454)
Beryllium nitrate	X	1 (0.454)
Butyl acetate	D	5,000 (2,270)
Butylamine	C	1,000 (454)
n-Butyl phthalate	A	10 (4.54)
Butyric acid	D	5,000 (2,270)
Cadmium acetate	A	10 (4.54)
Cadmium bromide	A	10 (4.54)
Cadmium chloride	A	10 (4.54)
Calcium arsenate	X	1 (0.454)
Calcium arsenite	X	1 (0.454)
Calcium carbide	A	10 (4.54)
Calcium chromate	A	10 (4.54)
Calcium cyanide	A	10 (4.54)
Calcium dodecylbenzenesulfonate	C	1,000 (454)
Calcium hypochlorite	A	10 (4.54)
Captan	A	10 (4.54)
Carbaryl	B	100 (45.4)
Carbofuran	A	10 (4.54)
Carbon disulfide	B	100 (45.4)
Carbon tetrachloride	A	10 (4.54)
Chlordane	X	1 (0.454)
Chlorine	A	10 (4.54)
Chlorobenzene	B	100 (45.4)
Chloroform	A	10 (4.54)
Chlorosulfonic acid	C	1,000 (454)
Chlorpyrifos	X	1 (0.454)
Chromic acetate	C	1,000 (454)
Chromic acid	A	10 (4.54)
Chromic sulfate	C	1,000 (454)
Chromous chloride	C	1,000 (454)
Cobaltous bromide	C	1,000 (454)
Cobaltous formate	C	1,000 (454)
Cobaltous sulfamate	C	1,000 (454)
Coumaphos	A	10 (4.54)
Cresol	B	100 (45.4)
Crotonaldehyde	B	100 (45.4)
Cupric acetate	B	100 (45.4)
Cupric acetoarsenite	X	1 (0.454)
Cupric chloride	A	10 (4.54)
Cupric nitrate	B	100 (45.4)

TABLE 117.3—REPORTABLE QUANTITIES OF HAZARDOUS SUBSTANCES DESIGNATED PURSUANT TO SECTION 311 OF THE CLEAN WATER ACT—Continued

Material	Category	RQ in pounds (kilograms)
Cupric oxalate	B	100 (45.4)
Cupric sulfate	A	10 (4.54)
Cupric sulfate, ammoniated	B	100 (45.4)
Cupric tartrate	B	100 (45.4)
Cyanogen chloride	A	10 (4.54)
Cyclohexane	C	1,000 (454)
2,4-D Acid	B	100 (45.4)
2,4-D Esters	B	100 (45.4)
DDT	X	1 (0.454)
Diazinon	X	1 (0.454)
Dicamba	C	1,000 (454)
Dichlobenil	B	100 (45.4)
Dichlone	X	1 (0.454)
Dichlorobenzene	B	100 (45.4)
Dichloropropane	C	1,000 (454)
Dichloropropene	B	100 (45.4)
Dichloropropene-Dichloropropane (mixture)	B	100 (45.4)
2,2-Dichloropropionic acid	D	5,000 (2,270)
Dichlorvos	A	10 (4.54)
Dicofol	A	10 (4.54)
Dieldrin	X	1 (0.454)
Diethylamine	B	100 (45.4)
Dimethylamine	C	1,000 (454)
Dinitrobenzene (mixed)	B	100 (45.4)
Dinitrophenol	A	10 (45.4)
Dinitrotoluene	A	10 (4.54)
Diquat	C	1,000 (454)
Disulfoton	X	1 (0.454)
Diuron	B	100 (45.4)
Dodecylbenzenesulfonic acid	C	1,000 (454)
Endosulfan	X	1 (0.454)
Endrin	X	1 (0.454)
Epichlorohydrin	B	100 (45.4)
Ethion	A	10 (4.54)
Ethylbenzene	C	1,000 (454)
Ethylenediamine	D	5,000 (2,270)
Ethylenediamine-tetraacetic acid (EDTA)	D	5,000 (2,270)
Ethylene dibromide	X	1 (0.454)
Ethylene dichloride	B	100 (45.4)
Ferric ammonium citrate	C	1,000 (454)
Ferric ammonium oxalate	C	1,000 (454)
Ferric chloride	C	1,000 (454)
Ferric fluoride	B	100 (45.4)
Ferric nitrate	C	1,000 (454)
Ferric sulfate	C	1,000 (454)
Ferrous ammonium sulfate	C	1,000 (454)
Ferrous chloride	B	100 (45.4)
Ferrous sulfate	C	1,000 (454)
Formaldehyde	B	100 (45.4)
Formic acid	D	5,000 (2,270)
Fumaric acid	D	5,000 (2,270)
Furfural	D	5,000 (2,270)
Guthion	X	1 (0.454)
Heptachlor	X	1 (0.454)
Hexachlorocyclopentadiene	A	10 (4.54)
Hydrochloric acid	D	5,000 (2,270)
Hydrofluoric acid	B	100 (45.4)
Hydrogen cyanide	A	10 (4.54)
Hydrogen sulfide	B	100 (45.4)
Isoprene	B	100 (45.4)
Isopropanolamine dodecylbenzenesulfonate	C	1,000 (454)
Kepone	X	1 (0.454)
Lead acetate	A	10 (4.54)
Lead arsenate	X	1 (0.454)
Lead chloride	A	10 (4.54)
Lead fluoborate	A	10 (4.54)
Lead fluoride	A	10 (4.54)
Lead iodide	A	10 (4.54)
Lead nitrate	A	10 (4.54)
Lead stearate	A	10 (4.54)
Lead sulfate	A	10 (4.54)

TABLE 117.3—REPORTABLE QUANTITIES OF HAZARDOUS SUBSTANCES DESIGNATED PURSUANT TO SECTION 311 OF THE CLEAN WATER ACT—Continued

Material	Category	RQ in pounds (kilograms)
Lead sulfide	A	10 (4.54)
Lead thiocyanate	A	10 (4.54)
Lindane	X	1 (0.454)
Lithium chromate	A	10 (4.54)
Malathion	B	100 (45.4)
Maleic acid	D	5,000 (2,270)
Maleic anhydride	D	5,000 (2,270)
Mercaptodimethur	A	10 (4.54)
Mercuric cyanide	X	1 (0.454)
Mercuric nitrate	A	10 (4.54)
Mercuric sulfate	A	10 (4.54)
Mercuric thiocyanate	A	10 (4.54)
Mercurous nitrate	A	10 (4.54)
Methoxychlor	X	1 (0.454)
Methyl mercaptan	B	100 (45.4)
Methyl methacrylate	C	1,000 (454)
Methyl parathion	B	100 (45.4)
Mevinphos	A	10 (4.54)
Mexacarbate	C	1,000 (454)
Monoethylamine	B	100 (45.4)
Monomethylamine	B	100 (45.4)
Naled	A	10 (4.54)
Naphthalene	B	100 (45.4)
Naphthenic acid	B	100 (45.4)
Nickel ammonium sulfate	B	100 (45.4)
Nickel chloride	B	100 (45.4)
Nickel hydroxide	A	10 (4.54)
Nickel nitrate	B	100 (45.4)
Nickel sulfate	B	100 (45.4)
Nitric acid	C	1,000 (454)
Nitrobenzene	C	1,000 (454)
Nitrogen dioxide	A	10 (4.54)
Nitrophenol (mixed)	B	100 (45.4)
Nitrotoluene	C	1,000 (454)
Paraformaldehyde	C	1,000 (454)
Parathion	A	10 (4.54)
Pentachlorophenol	A	10 (4.54)
Phenol	C	1,000 (454)
Phosgene	A	10 (4.54)
Phosphoric acid	D	5,000 (2,270)
Phosphorus	X	1 (0.454)
Phosphorus oxychloride	C	1,000 (454)
Phosphorus pentasulfide	B	100 (45.4)
Phosphorus trichloride	C	1,000 (454)
Polychlorinated biphenyls	X	1 (0.454)
Potassium arsenate	X	1 (0.454)
Potassium arsenite	X	1 (0.454)
Potassium bichromate	A	10 (4.54)
Potassium chromate	A	10 (4.54)
Potassium cyanide	A	10 (4.54)
Potassium hydroxide	C	1,000 (454)
Potassium permanganate	B	100 (45.4)
Propargite	A	10 (4.54)
Propionic acid	D	5,000 (2,270)
Propionic anhydride	D	5,000 (2,270)
Propylene oxide	B	100 (45.4)
Pyrethrins	X	1 (0.454)
Quinoline	D	5,000 (2,270)
Resorcinol	D	5,000 (2,270)
Selenium oxide	A	10 (4.54)
Silver nitrate	X	1 (0.454)
Sodium	A	10 (4.54)
Sodium arsenate	X	1 (0.454)
Sodium arsenite	X	1 (0.454)
Sodium bichromate	A	10 (4.54)
Sodium bifluoride	B	100 (45.4)
Sodium bisulfite	D	5,000 (2,270)
Sodium chromate	A	10 (4.54)
Sodium cyanide	A	10 (4.54)
Sodium dodecylbenzenesulfonate	C	1,000 (454)
Sodium fluoride	C	1,000 (454)

TABLE 117.3—REPORTABLE QUANTITIES OF HAZARDOUS SUBSTANCES DESIGNATED PURSUANT TO SECTION 311 OF THE CLEAN WATER ACT—Continued

Material	Category	RQ in pounds (kilograms)
Sodium hydrosulfide	D	5,000 (2,270)
Sodium hydroxide	C	1,000 (454)
Sodium hypochlorite	B	100 (45.4)
Sodium methylate	C	1,000 (454)
Sodium nitrite	B	100 (45.4)
Sodium phosphate, dibasic	D	5,000 (2,270)
Sodium phosphate, tribasic	D	5,000 (2,270)
Sodium selenite	B	100 (45.4)
Strontium chromate	A	10 (4.54)
Strychnine	A	10 (4.54)
Styrene	C	1,000 (454)
Sulfuric acid	C	1,000 (454)
Sulfur monochloride	C	1,000 (454)
2,4,5-T acid	C	1,000 (454)
2,4,5-T amines	D	5,000 (2,270)
2,4,5-T esters	C	1,000 (454)
2,4,5-T salts	C	1,000 (454)
TDE	X	1 (0.454)
2,4,5-TP acid	B	100 (45.4)
2,4,5-TP acid esters	B	100 (45.4)
Tetraethyl lead	A	10 (4.54)
Tetraethyl pyrophosphate	A	10 (4.54)
Thallium sulfate	B	100 (45.4)
Toluene	C	1,000 (454)
Toxaphene	X	1 (0.454)
Trichlorfon	B	100 (45.4)
Trichloroethylene	B	100 (45.4)
Trichlorophenol	A	10 (4.54)
Triethanolamine dodecylbenzenesulfonate	C	1,000 (454)
Triethylamine	D	5,000 (2,270)
Trimethylamine	B	100 (45.4)
Uranyl acetate	B	100 (45.4)
Uranyl nitrate	B	100 (45.4)
Vanadium pentoxide	C	1,000 (454)
Vanadyl sulfate	C	1,000 (454)
Vinyl acetate	D	5,000 (2,270)
Vinylidene chloride	B	100 (45.4)
Xylene (mixed)	B	100 (45.4)
Xylenol	C	1,000 (454)
Zinc acetate	C	1,000 (454)
Zinc ammonium chloride	C	1,000 (454)
Zinc borate	C	1,000 (454)
Zinc bromide	C	1,000 (454)
Zinc carbonate	C	1,000 (454)
Zinc chloride	C	1,000 (454)
Zinc cyanide	A	10 (4.54)
Zinc fluoride	C	1,000 (454)
Zinc formate	C	1,000 (454)
Zinc hydrosulfite	C	1,000 (454)
Zinc nitrate	C	1,000 (454)
Zinc phenolsulfonate	D	5,000 (2,270)
Zinc phosphide	B	100 (45.4)
Zinc silicofluoride	D	5,000 (2,270)
Zinc sulfate	C	1,000 (454)
Zirconium nitrate	D	5,000 (2,270)
Zirconium potassium fluoride	C	1,000 (454)
Zirconium sulfate	D	5,000 (2,270)
Zirconium tetrachloride	D	5,000 (2,270)

[50 FR 13513, Apr. 4, 1985, as amended at 51 FR 34547, Sept. 29, 1986; 54 FR 33482, Aug. 14, 1989; 58 FR 35327, June 30, 1993; 60 FR 30937, June 12, 1995]

Subpart B—Applicability

§117.11 General applicability.

This regulation sets forth a determination of the reportable quantity for each substance designated as hazardous in 40 CFR part 116. The regulation applies to quantities of designated substances equal to or greater than the reportable quantities, when discharged into or upon the navigable waters of the United States, adjoining shorelines, into or upon the contiguous zone, or beyond the contiguous zone as provided in section 311(b)(3) of the Act, except to the extent that the owner or operator can show such that discharges are made:

(a) In compliance with a permit issued under the Marine Protection, Research and Sanctuaries Act of 1972 (33 U.S.C. 1401 *et seq.*);

(b) In compliance with approved water treatment plant operations as specified by local or State regulations pertaining to safe drinking water;

(c) Pursuant to the label directions for application of a pesticide product registered under section 3 or section 24 of the Federal Insecticide, Fungicide, and Rodenticide Act (FIFRA), as amended (7 U.S.C. 136 *et seq.*), or pursuant to the terms and conditions of an experimental use permit issued under section 5 of FIFRA, or pursuant to an exemption granted under section 18 of FIFRA;

(d) In compliance with the regulations issued under section 3004 or with permit conditions issued pursuant to section 3005 of the Resource Conservation and Recovery Act (90 Stat. 2795; 42 U.S.C. 6901);

(e) In compliance with instructions of the On-Scene Coordinator pursuant to 40 CFR part 1510 (the National Oil and Hazardous Substances Pollution Plan) or 33 CFR 153.10(e) (Pollution by Oil and Hazardous Substances) or in accordance with applicable removal regulations as required by section 311(j)(1)(A);

(f) In compliance with a permit issued under §165.7 of Title 14 of the State of California Administrative Code;

(g) From a properly functioning inert gas system when used to provide inert gas to the cargo tanks of a vessel;

(h) From a permitted source and are excluded by §117.12 of this regulation;

(i) To a POTW and are specifically excluded or reserved in §117.13; or

(j) In compliance with a permit issued under section 404(a) of the Clean Water Act or when the discharges are exempt from such requirements by section 404(f) or 404(r) of the Act (33 U.S.C. 1344(a), (f), (r)).

§117.12 Applicability to discharges from facilities with NPDES permits.

(a) This regulation does not apply to:

(1) Discharges in compliance with a permit under section 402 of this Act;

(2) Discharges resulting from circumstances identified, reviewed and made a part of the public record with respect to a permit issued or modified under section 402 of this Act, and subject to a condition in such permit;

(3) Continuous or anticipated intermittent discharges from a point source, identified in a permit or permit application under section 402 of this Act, which are caused by events occurring within the scope of the relevant operating or treatment systems; or

(b) A discharge is ''in compliance with a permit issued under section 402 of this Act'' if the permit contains an effluent limitation specifically applicable to the substance discharged or an effluent limitation applicable to another waste parameter which has been specifically identified in the permit as intended to limit such substance, and the discharge is in compliance with the effluent limitation.

(c) A discharge results ''from circumstances identified, reviewed and made a part of the public record with respect to a permit issued or modified under section 402 of the Act, and subject to a condition in such permit,'' whether or not the discharge is in compliance with the permit, where:

(1) The permit application, the permit, or another portion of the public record contains documents that specifically identify:

(i) The substance and the amount of the substance; and

(ii) The origin and source of the substance; and

(iii) The treatment which is to be provided for the discharge either by:

(A) An on-site treatment system separate from any treatment system treating the permittee's normal discharge; or

(B) A treatment system designed to treat the permittee's normal discharge and which is additionally capable of treating the identified amount of the identified substance; or

(C) Any combination of the above; and

(2) The permit contains a requirement that the substance and amounts of the substance, as identified in § 117.12(c)(1)(i) and § 117.12(c)(1)(ii) be treated pursuant to § 117.12(c)(1)(iii) in the event of an on-site release; and

(3) The treatment to be provided is in place.

(d) A discharge is a ''continuous or anticipated intermittent discharge from a point source, identified in a permit or permit application under section 402 of this Act, and caused by events occurring within the scope of the relevant operating or treatment systems,'' whether or not the discharge is in compliance with the permit, if:

(1) The hazardous substance is discharged from a point source for which a valid permit exists or for which a permit application has been submitted; and

(2) The discharge of the hazardous substance results from:

(i) The contamination of noncontact cooling water or storm water, provided that such cooling water or storm water is not contaminated by an on-site spill of a hazardous substance; or

(ii) A continuous or anticipated intermittent discharge of process waste water, and the discharge originates within the manufacturing or treatment systems; or

(iii) An upset or failure of a treatment system or of a process producing a continuous or anticipated intermittent discharge where the upset or failure results from a control problem, an operator error, a system failure or malfunction, an equipment or system startup or shutdown, an equipment wash, or a production schedule change, provided that such upset or failure is not caused by an on-site spill of a hazardous substance.

[44 FR 50776, Aug. 29, 1979, as amended at 44 FR 58910, Oct. 12, 1979]

§ 117.13 Applicability to discharges from publicly owned treatment works and their users.

(a) [Reserved]

(b) These regulations apply to all discharges of reportable quantities to a POTW, where the discharge originates from a mobile source, except where such source has contracted with, or otherwise received written permission from the owners or operators of the POTW to discharge that quantity, and the mobile source can show that prior to accepting the substance from an industrial discharger, the substance had been treated to comply with any effluent limitation under sections 301, 302 or 306 or pretreatment standard under section 307 applicable to that facility.

§ 117.14 Demonstration projects.

Notwithstanding any other provision of this part, the Administrator of the Environmental Protection Agency may, on a case-by-case basis, allow the discharge of designated hazardous substances in connection with research or demonstration projects relating to the prevention, control, or abatement of hazardous substance pollution. The Administrator will allow such a discharge only where he determines that the expected environmental benefit from such a discharge will outweigh the potential hazard associated with the discharge.

Subpart C—Notice of Discharge of a Reportable Quantity

§ 117.21 Notice.

Any person in charge of a vessel or an onshore or an offshore facility shall, as soon as he has knowledge of any discharge of a designated hazardous substance from such vessel or facility in quantities equal to or exceeding in any 24-hour period the reportable quantity determined by this part, immediately notify the appropriate agency of the United States Government of such discharge. Notice shall be given in accordance with such procedures as the Secretary of Transportation has set forth in 33 CFR 153.203. This provision applies to all discharges not specifically excluded or reserved by another section of these regulations.

§117.23 Liabilities for removal.

In any case where a substance designated as hazardous in 40 CFR part 116 is discharged from any vessel or onshore or offshore facility in a quantity equal to or exceeding the reportable quantity determined by this part, the owner, operator or person in charge will be liable, pursuant to section 311 (f) and (g) of the Act, to the United States Government for the actual costs incurred in the removal of such substance, subject only to the defenses and monetary limitations enumerated in section 311 (f) and (g) of the Act.

The Administrator may act to mitigate the damage to the public health or welfare caused by a discharge and the cost of such mitigation shall be considered a cost incurred under section 311(c) for the removal of that substance by the United States Government.

PART 121—STATE CERTIFICATION OF ACTIVITIES REQUIRING A FEDERAL LICENSE OR PERMIT

Subpart A—General

Sec.
121.1 Definitions.
121.2 Contents of certification.
121.3 Contents of application.

Subpart B—Determination of Effect on Other States

121.11 Copies of documents.
121.12 Supplemental information.
121.13 Review by Regional Administrator and notification.
121.14 Forwarding to affected State.
121.15 Hearings on objection of affected State.
121.16 Waiver.

Subpart C—Certification by the Administrator

121.21 When Administrator certifies.
121.22 Applications.
121.23 Notice and hearing.
121.24 Certification.
121.25 Adoption of new water quality standards.
121.26 Inspection of facility or activity before operation.
121.27 Notification to licensing or permitting agency.
121.28 Termination of suspension.

Subpart D—Consultations

121.30 Review and advice.

AUTHORITY: Sec. 21 (b) and (c), 84 Stat. 91 (33 U.S.C. 1171(b) (1970)); Reorganization Plan No. 3 of 1970.

SOURCE: 36 FR 22487, Nov. 25, 1971, unless otherwise noted. Redesignated at 37 FR 21441, Oct. 11, 1972 and 44 FR 32899, June 7, 1979.

Subpart A—General

§121.1 Definitions.

As used in this part, the following terms shall have the meanings indicated below:

(a) *License or permit* means any license or permit granted by an agency of the Federal Government to conduct any activity which may result in any discharge into the navigable waters of the United States.

(b) *Licensing or permitting agency* means any agency of the Federal Government to which application is made for a license or permit.

(c) *Administrator* means the Administrator, Environmental Protection Agency.

(d) *Regional Administrator* means the Regional designee appointed by the Administrator, Environmental Protection Agency.

(e) *Certifying agency* means the person or agency designated by the Governor of a State, by statute, or by other governmental act, to certify compliance with applicable water quality standards. If an interstate agency has sole authority to so certify for the area within its jurisdiction, such interstate agency shall be the certifying agency. Where a State agency and an interstate agency have concurrent authority to certify, the State agency shall be the certifying agency. Where water quality standards have been promulgated by the Administrator pursuant to section 10(c)(2) of the Act, or where no State or interstate agency has authority to certify, the Administrator shall be the certifying agency.

(f) *Act* means the Federal Water Pollution Control Act, 33 U.S.C. 1151 *et seq.*

(g) *Water quality standards* means standards established pursuant to section 10(c) of the Act, and State-adopted water quality standards for navigable waters which are not interstate waters.

§ 121.2 Contents of certification.

(a) A certification made by a certifying agency shall include the following:

(1) The name and address of the applicant;

(2) A statement that the certifying agency has either (i) examined the application made by the applicant to the licensing or permitting agency (specifically identifying the number or code affixed to such application) and bases its certification upon an evaluation of the information contained in such application which is relevant to water quality considerations, or (ii) examined other information furnished by the applicant sufficient to permit the certifying agency to make the statement described in paragraph (a)(3) of this section;

(3) A statement that there is a reasonable assurance that the activity will be conducted in a manner which will not violate applicable water quality standards;

(4) A statement of any conditions which the certifying agency deems necessary or desirable with respect to the discharge of the activity; and

(5) Such other information as the certifying agency may determine to be appropriate.

(b) The certifying agency may modify the certification in such manner as may be agreed upon by the certifying agency, the licensing or permitting agency, and the Regional Administrator.

§ 121.3 Contents of application.

A licensing or permitting agency shall require an applicant for a license or permit to include in the form of application such information relating to water quality considerations as may be agreed upon by the licensing or permitting agency and the Administrator.

Subpart B—Determination of Effect on Other States

§ 121.11 Copies of documents.

(a) Upon receipt from an applicant of an application for a license or permit without an accompanying certification, the licensing or permitting agency shall either: (1) Forward one copy of the application to the appropriate certifying agency and two copies to the Regional Administrator, or (2) forward three copies of the application to the Regional Administrator, pursuant to an agreement between the licensing or permitting agency and the Administrator that the Regional Administrator will transmit a copy of the application to the appropriate certifying agency. Upon subsequent receipt from an applicant of a certification, the licensing or permitting agency shall forward a copy of such certification to the Regional Administrator, unless such certification shall have been made by the Regional Administrator pursuant to § 121.24.

(b) Upon receipt from an applicant of an application for a license or permit with an accompanying certification, the licensing or permitting agency shall forward two copies of the application and certification to the Regional Administrator.

(c) Only those portions of the application which relate to water quality considerations shall be forwarded to the Regional Administrator.

§ 121.12 Supplemental information.

If the documents forwarded to the Regional Administrator by the licensing or permitting agency pursuant to § 121.11 do not contain sufficient information for the Regional Administrator to make the determination provided for in § 121.13, the Regional Administrator may request, and the licensing or permitting agency shall obtain from the applicant and forward to the Regional Administrator, any supplemental information as may be required to make such determination.

§ 121.13 Review by Regional Administrator and notification.

The Regional Administrator shall review the application, certification, and any supplemental information provided in accordance with §§ 121.11 and 121.12 and if the Regional Administrator determines there is reason to believe that a discharge may affect the quality of the waters of any State or States other than the State in which the discharge originates, the Regional Administrator shall, no later than 30 days of the date

of receipt of the application and certification from the licensing or permitting agency as provided in §121.11, so notify each affected State, the licensing or permitting agency, and the applicant.

§121.14 Forwarding to affected State.

The Regional Administrator shall forward to each affected State a copy of the material provided in accordance with §121.11.

§121.15 Hearings on objection of affected State.

When a licensing or permitting agency holds a public hearing on the objection of an affected State, notice of such objection, including the grounds for such objection, shall be forwarded to the Regional Administrator by the licensing or permitting agency no later than 30 days prior to such hearing. The Regional Administrator shall at such hearing submit his evaluation with respect to such objection and his recommendations as to whether and under what conditions the license or permit should be issued.

§121.16 Waiver.

The certification requirement with respect to an application for a license or permit shall be waived upon:

(a) Written notification from the State or interstate agency concerned that it expressly waives its authority to act on a request for certification; or

(b) Written notification from the licensing or permitting agency to the Regional Administrator of the failure of the State or interstate agency concerned to act on such request for certification within a reasonable period of time after receipt of such request, as determined by the licensing or permitting agency (which period shall generally be considered to be 6 months, but in any event shall not exceed 1 year).

In the event of a waiver hereunder, the Regional Administrator shall consider such waiver as a substitute for a certification, and as appropriate, shall conduct the review, provide the notices, and perform the other functions identified in §§121.13, 121.14, and 121.15. The notices required by §121.13 shall be provided not later than 30 days after the date of receipt by the Regional Administrator of either notification referred to herein.

Subpart C—Certification by the Administrator

§121.21 When Administrator certifies.

Certification by the Administrator that the discharge resulting from an activity requiring a license or permit will not violate applicable water quality standards will be required where:

(a) Standards have been promulgated, in whole or in part, by the Administrator pursuant to section 10(c)(2) of the Act: *Provided, however,* That the Administrator will certify compliance only with respect to those water quality standards promulgated by him; or

(b) Water quality standards have been established, but no State or interstate agency has authority to give such a certification.

§121.22 Applications.

An applicant for certification from the Administrator shall submit to the Regional Administrator a complete description of the discharge involved in the activity for which certification is sought, with a request for certification signed by the applicant. Such description shall include the following:

(a) The name and address of the applicant;

(b) A description of the facility or activity, and of any discharge into navigable waters which may result from the conduct of any activity including, but not limited to, the construction or operation of the facility, including the biological, chemical, thermal, and other characteristics of the discharge, and the location or locations at which such discharge may enter navigable waters;

(c) A description of the function and operation of equipment or facilities to treat wastes or other effluents which may be discharged, including specification of the degree of treatment expected to be attained;

(d) The date or dates on which the activity will begin and end, if known, and the date or dates on which the discharge will take place;

(e) A description of the methods and means being used or proposed to monitor the quality and characteristics of the discharge and the operation of equipment or facilities employed in the treatment or control of wastes or other effluents.

§ 121.23 Notice and hearing.

The Regional Administrator will provide public notice of each request for certification by mailing to State, County, and municipal authorities, heads of State agencies responsible for water quality improvement, and other parties known to be interested in the matter, including adjacent property owners and conservation organizations, or may provide such notice in a newspaper of general circulation in the area in which the activity is proposed to be conducted if the Regional Administrator deems mailed notice to be impracticable. Interested parties shall be provided an opportunity to comment on such request in such manner as the Regional Administrator deems appropriate. All interested and affected parties will be given reasonable opportunity to present evidence and testimony at a public hearing on the question whether to grant or deny certification if the Regional Administrator determines that such a hearing is necessary or appropriate.

§ 121.24 Certification.

If, after considering the complete description, the record of a hearing, if any, held pursuant to § 121.23, and such other information and data as the Regional Administrator deems relevant, the Regional Administrator determines that there is reasonable assurance that the proposed activity will not result in a violation of applicable water quality standards, he shall so certify. If the Regional Administrator determines that no water quality standards are applicable to the waters which might be affected by the proposed activity, he shall so notify the applicant and the licensing or permitting agency in writing and shall provide the licensing or permitting agency with advice, suggestions, and recommendations with respect to conditions to be incorporated in any license or permit to achieve compliance with the purpose of this Act. In such case, no certification shall be required.

§ 121.25 Adoption of new water quality standards.

(a) In any case where:

(1) A license or permit was issued without certification due to the absence of applicable water quality standards; and

(2) Water quality standards applicable to the waters into which the licensed or permitted activity may discharge are subsequently established; and

(3) The Administrator is the certifying agency because:

(i) No State or interstate agency has authority to certify; or

(ii) Such new standards were promulgated by the Administrator pursuant to section 10(c)(2) of the Act; and

(4) The Regional Administrator determines that such uncertified activity is violating water quality standards;

Then the Regional Administrator shall notify the licensee or permittee of such violation, including his recommendations as to actions necessary for compliance. If the licensee or permittee fails within 6 months of the date of such notice to take action which in the opinion of the Regional Administrator will result in compliance with applicable water quality standards, the Regional Administrator shall notify the licensing or permitting agency that the licensee or permittee has failed, after reasonable notice, to comply with such standards and that suspension of the applicable license or permit is required by section 21(b)(9)(B) of the Act.

(b) Where a license or permit is suspended pursuant to paragraph (a) of this section, and where the licensee or permittee subsequently takes action which in the Regional Administrator's opinion will result in compliance with applicable water quality standards, the Regional Administrator shall then notify the licensing or permitting agency that there is reasonable assurance that the licensed or permitted activity will comply with applicable water quality standards.

§ 121.26 Inspection of facility or activity before operation.

Where any facility or activity has received certification pursuant to § 121.24 in connection with the issuance of a license or permit for construction, and where such facility or activity is not required to obtain an operating license or permit, the Regional Administrator or his representative, prior to the initial operation of such facility or activity, shall be afforded the opportunity to inspect such facility or activity for the purpose of determining if the manner in which such facility or activity will be operated or conducted will violate applicable water quality standards.

§ 121.27 Notification to licensing or permitting agency.

If the Regional Administrator, after an inspection pursuant to § 121.26, determines that operation of the proposed facility or activity will violate applicable water quality standards, he shall so notify the applicant and the licensing or permitting agency, including his recommendations as to remedial measures necessary to bring the operation of the proposed facility into compliance with such standards.

§ 121.28 Termination of suspension.

Where a licensing or permitting agency, following a public hearing, suspends a license or permit after receiving the Regional Administrator's notice and recommendation pursuant to § 121.27, the applicant may submit evidence to the Regional Administrator that the facility or activity or the operation or conduct thereof has been modified so as not to violate water quality standards. If the Regional Administrator determines that water quality standards will not be violated, he shall so notify the licensing or permitting agency.

Subpart D—Consultations

§ 121.30 Review and advice.

The Regional Administrator may, and upon request shall, provide licensing and permitting agencies with determinations, definitions and interpretations with respect to the meaning and content of water quality standards where they have been federally approved under section 10 of the Act, and findings with respect to the application of all applicable water quality standards in particular cases and in specific circumstances relative to an activity for which a license or permit is sought. The Regional Administrator may, and upon request shall, also advise licensing and permitting agencies as to the status of compliance by dischargers with the conditions and requirements of applicable water quality standards. In cases where an activity for which a license or permit is sought will affect water quality, but for which there are no applicable water quality standards, the Regional Administrator may advise licensing or permitting agencies with respect to conditions of such license or permit to achieve compliance with the purpose of the Act.

PART 122—EPA ADMINISTERED PERMIT PROGRAMS: THE NATIONAL POLLUTANT DISCHARGE ELIMINATION SYSTEM

Subpart A—Definitions and General Program Requirements

Sec.
122.1 Purpose and scope.
122.2 Definitions.
122.3 Exclusions.
122.4 Prohibitions (applicable to State NPDES Programs, see § 123.25).
122.5 Effect of a permit.
122.6 Continuation of expiring permits.
122.7 Confidentiality of information.

Subpart B—Permit Application and Special NPDES Program Requirements

122.21 Application for a permit (applicable to State programs, see § 123.25).
122.22 Signatories to permit applications and reports (applicable to State programs, see § 123.25).
122.23 Concentrated animal feeding operations (applicable to State NPDES programs, see § 123.25).
122.24 Concentrated aquatic animal production facilities (applicable to State NPDES programs, see § 123.25).
122.25 Aquaculture projects (applicable to State NPDES programs, see § 123.25).
122.26 Storm water discharges (applicable to State NPDES programs, see § 123.25).
122.27 Silvicultural activities (applicable to State NPDES programs, see § 123.25).

122.28 General permits (applicable to State NPDES programs, see § 123.25).
122.29 New sources and new dischargers.

Subpart C—Permit Conditions

122.41 Conditions applicable to all permits (applicable to State programs, see § 123.25).
122.42 Additional conditions applicable to specified categories of NPDES permits (applicable to State NPDES programs, see § 123.25).
122.43 Establishing permit conditions (applicable to State programs, see § 123.25).
122.44 Establishing limitations, standards and other permit conditions (applicable to State NPDES programs, see § 123.25).
122.45 Calculating NPDES permit conditions (applicable to State NPDES programs, see § 123.25).
122.46 Duration of permits (applicable to State programs, see § 123.25).
122.47 Schedules of compliance.
122.48 Requirements for recording and reporting of monitoring results (applicable to State programs, see § 123.25).
122.49 Considerations under Federal law.
122.50 Disposal of pollutants into wells, into publicly owned treatment works or by land application (applicable to State NPDES programs, see § 123.25).

Subpart D—Transfer, Modification, Revocation and Reissuance, and Termination of Permits

122.61 Transfer of permits (applicable to State programs, see § 123.25).
122.62 Modification or revocation and reissuance of permits (applicable to State programs, see § 123.25).
122.63 Minor modifications of permits.
122.64 Termination of permits (applicable to State programs, see § 123.25).
APPENDIX A TO PART 122—NPDES PRIMARY INDUSTRY CATEGORIES
APPENDIX B TO PART 122—CRITERIA FOR DETERMINING A CONCENTRATED ANIMAL FEEDING OPERATION (§ 122.23)
APPENDIX C TO PART 122—CRITERIA FOR DETERMINING A CONCENTRATED AQUATIC ANIMAL PRODUCTION FACILITY (§ 122.24)
APPENDIX D TO PART 122—NPDES PERMIT APPLICATION TESTING REQUIREMENTS (§ 122.21)
APPENDIX E TO PART 122—RAINFALL ZONES OF THE UNITED STATES
APPENDIX F TO PART 122—INCORPORATED PLACES WITH POPULATIONS GREATER THAN 250,000 ACCORDING TO LATEST DECENNIAL CENSUS BY BUREAU OF CENSUS
APPENDIX G TO PART 122—PLACES WITH POPULATIONS GREATER THAN 100,000 AND LESS THAN 250,000 ACCORDING TO LATEST DECENNIAL CENSUS BY BUREAU OF CENSUS
APPENDIX H TO PART 122—COUNTIES WITH UNINCORPORATED URBANIZED AREAS WITH A POPULATION OF 250,000 OR MORE ACCORDING TO THE LATEST DECENNIAL CENSUS BY THE BUREAU OF CENSUS
APPENDIX I TO PART 122—COUNTIES WITH UNINCORPORATED URBANIZED AREAS GREATER THAN 100,000, BUT LESS THAN 250,000 ACCORDING TO THE LATEST DECENNIAL CENSUS BY THE BUREAU OF CENSUS

AUTHORITY: The Clean Water Act, 33 U.S.C. 1251 *et seq.*

SOURCE: 48 FR 14153, Apr. 1, 1983, unless otherwise noted.

Subpart A—Definitions and General Program Requirements

§ 122.1 Purpose and scope.

(a) *Coverage.* (1) These regulations contain provisions for the *National Pollutant Discharge Elimination System* (NPDES) Program under section 318, 402, and 405 of the *Clean Water Act* (CWA) (Pub. L. 92–500, as amended by Pub. L. 95–217, Pub. L. 95–576, Pub. L. 96–483, Pub. L. 97–117, and Pub. L. 100–4; 33 U.S.C.1251 *et seq.*)

(2) These regulations cover basic EPA permitting requirements (part 122), what a State must do to obtain approval to operate its program in lieu of a Federal program and minimum requirements for administering the approved State program (part 123), and procedures for EPA processing of permit applications and appeals (part 124). Part 124 is also applicable to other EPA permitting programs, as detailed in that part.

(b) *Scope of the NPDES permit requirement.* (1) The NPDES program requires permits for the discharge of ''pollutants'' from any ''point source'' into ''waters of the United States.'' The terms ''pollutant'', ''point source'' and ''waters of the United States'' are defined in § 122.2.

(2) The following are point sources requiring NPDES permits for discharges:

(i) Concentrated animal feeding operations as defined in § 122.23;

(ii) Concentrated aquatic animal production facilities as defined in § 122.24;

(iii) Discharges into aquaculture projects as set forth in § 122.25;

(iv) Discharges of storm water as set forth in § 122.26; and

(v) Silvicultural point sources as defined in § 122.27.

(3) The permit program established under this part also applies to owners or operators of any treatment works treating domestic sewage, whether or not the treatment works is otherwise required to obtain an NPDES permit in accordance with paragraph (a)(1) of this section, unless all requirements implementing section 405(d) of CWA applicable to the treatment works treating domestic sewage are included in a permit issued under the appropriate provisions of subtitle C of the Solid Waste Disposal Act, Part C of the Safe Drinking Water Act, the Marine Protection, Research, and Sanctuaries Act of 1972, or the Clean Air Act, or under State permit programs approved by the Administrator as adequate to assure compliance with section 405 of the CWA.

(4) The Regional Administrator may designate any person subject to the standards for sewage sludge use and disposal as a ''treatment works treating domestic sewage'' as defined in § 122.1, where he or she finds that a permit is necessary to protect public health and the environment from the adverse effects of sewage sludge or to ensure compliance with the technical standards for sludge use and disposal developed under CWA section 405(d). Any person designated as a ''treatment works treating domestic sewage'' shall submit an application for a permit under § 122.21 within 180 days of being notified by the Regional Administrator that a permit is required. The Regional Administrator's decision to designate a person as a ''treatment works treating domestic sewage'' under this paragraph shall be stated in the fact sheet or statement of basis for the permit.

(c) *State programs.* Certain requirements set forth in part 122 and 124 are made applicable to approved State programs by reference in part 123. These references are set forth in § 123.25. If a section or paragraph of part 122 or 124 is applicable to States, through reference in § 123.25, that fact is signaled by the following words at the end of the section or paragraph heading: *(Applicable to State programs, see § 123.25*). If these words are absent, the section (or paragraph) applies only to EPA administered permits.

(d) *Relation to other requirements*—(1) *Permit application forms.* Applicants for EPA issued permits must submit their applications on EPA's permit application forms when available. Most of the information requested on these application forms is required by these regulations. The basic information required in the general form (Form 1) and the additional information required for NPDES applications (Forms 2 a through d) are listed in § 122.21. Applicants for State issued permits must use State forms which must require at a minimum the information listed in these sections.

(2) *Technical regulations.* The NPDES permit program has separate additional regulations. These separate regulations are used by permit issuing authorities to determine what requirements must be placed in permits if they are issued. These separate regulations are located at 40 CFR parts 125, 129, 133, 136, 40 CFR subchapter N (parts 400 through 460), and 40 CFR part 503.

(e) *Public participation.* This rule establishes the requirements for public participation in EPA and State permit issuance and enforcement and related variance proceedings, and in the approval of State NPDES programs. These requirements carry out the purposes of the public participation requirements of 40 CFR part 25 (Public Participation), and supersede the requirements of that part as they apply to actions covered under parts 122, 123, and 124.

(f) *State authorities.* Nothing in part 122, 123, or 124 precludes more stringent State regulation of any activity covered by these regulations, whether or not under an approved State program.

[48 FR 14153, Apr. 1, 1983, as amended at 54 FR 18781, May 2, 1989; 55 FR 48062, Nov. 16, 1990; 58 FR 9413, Feb. 19, 1993; 60 FR 33931, June 29, 1995]

§ 122.2 Definitions.

The following definitions apply to parts 122, 123, and 124. Terms not defined in this section have the meaning given by CWA. When a defined term appears in a definition, the defined term is sometimes placed in quotation marks as an aid to readers.

Administrator means the Administrator of the United States Environmental Protection Agency, or an authorized representative.

Applicable standards and limitations means all State, interstate, and federal standards and limitations to which a ''discharge,'' a ''sewage sludge use or disposal practice,'' or a related activity is subject under the CWA, including ''effluent limitations,'' water quality standards, standards of performance, toxic effluent standards or prohibitions, ''best management practices,'' pretreatment standards, and ''standards for sewage sludge use or disposal'' under sections 301, 302, 303, 304, 306, 307, 308, 403 and 405 of CWA.

Application means the EPA standard national forms for applying for a permit, including any additions, revisions or modifications to the forms; or forms approved by EPA for use in ''approved States,'' including any approved modifications or revisions.

Approved program or *approved State* means a State or interstate program which has been approved or authorized by EPA under part 123.

Average monthly discharge limitation means the highest allowable average of ''daily discharges'' over a calendar month, calculated as the sum of all ''daily discharges'' measured during a calendar month divided by the number of ''daily discharges'' measured during that month.

Average weekly discharge limitation means the highest allowable average of ''daily discharges'' over a calendar week, calculated as the sum of all ''daily discharges'' measured during a calendar week divided by the number of ''daily discharges'' measured during that week.

Best management practices (''BMPs'') means schedules of activities, prohibitions of practices, maintenance procedures, and other management practices to prevent or reduce the pollution of ''waters of the United States.'' BMPs also include treatment requirements, operating procedures, and practices to control plant site runoff, spillage or leaks, sludge or waste disposal, or drainage from raw material storage.

BMPs means ''best management practices.''

Class I sludge management facility means any POTW identified under 40 CFR 403.8(a) as being required to have an approved pretreatment program (including such POTWs located in a State that has elected to assume local program responsibilities pursuant to 40 CFR 403.10(e)) and any other treatment works treating domestic sewage classified as a Class I sludge management facility by the Regional Administrator, or, in the case of approved State programs, the Regional Administrator in conjunction with the State Director, because of the potential for its sludge use or disposal practices to adversely affect public health and the environment.

Contiguous zone means the entire zone established by the United States under Article 24 of the Convention on the Territorial Sea and the Contiguous Zone.

Continuous discharge means a ''discharge'' which occurs without interruption throughout the operating hours of the facility, except for infrequent shutdowns for maintenance, process changes, or other similar activities.

CWA means the Clean Water Act (formerly referred to as the Federal Water Pollution Control Act or Federal Water Pollution Control Act Amendments of 1972) Public Law 92–500, as amended by Public Law 95–217, Public Law 95–576, Public Law 96–483 and Public Law 97–117, 33 U.S.C. 1251 *et seq.*

CWA and regulations means the Clean Water Act (CWA) and applicable regulations promulgated thereunder. In the case of an approved State program, it includes State program requirements.

Daily discharge means the ''discharge of a pollutant'' measured during a calendar day or any 24-hour period that reasonably represents the calendar day for purposes of sampling. For pollutants with limitations expressed in units of mass, the ''daily discharge'' is calculated as the total mass of the pollutant discharged over the day. For pollutants with limitations expressed in other units of measurement, the ''daily discharge'' is calculated as the average measurement of the pollutant over the day.

Direct discharge means the ''discharge of a pollutant.''

Director means the Regional Administrator or the State Director, as the context requires, or an authorized representative. When there is no ''approved State program,'' and there is an EPA administered program, ''Director'' means the Regional Administrator. When there is an approved State program, ''Director'' normally means the State Director. In some circumstances, however, EPA retains the authority to take certain actions even when there is an approved State program. (For example, when EPA has issued an NPDES permit prior to the approval of a State program, EPA may retain jurisdiction over that permit after program approval, see § 123.1.) In such cases, the term ''Director'' means the Regional Administrator and not the State Director.

Discharge when used without qualification means the ''discharge of a pollutant.''

Discharge of a pollutant means:

(a) Any addition of any ''pollutant'' or combination of pollutants to ''waters of the United States'' from any ''point source,'' or

(b) Any addition of any pollutant or combination of pollutants to the waters of the ''contiguous zone'' or the ocean from any point source other than a vessel or other floating craft which is being used as a means of transportation.

This definition includes additions of pollutants into waters of the United States from: surface runoff which is collected or channelled by man; discharges through pipes, sewers, or other conveyances owned by a State, municipality, or other person which do not lead to a treatment works; and discharges through pipes, sewers, or other conveyances, leading into privately owned treatment works. This term does not include an addition of pollutants by any ''indirect discharger.''

Discharge Monitoring Report (''DMR'') means the EPA uniform national form, including any subsequent additions, revisions, or modifications for the reporting of self-monitoring results by permittees. DMRs must be used by ''approved States'' as well as by EPA. EPA will supply DMRs to any approved State upon request. The EPA national forms may be modified to substitute the State Agency name, address, logo, and other similar information, as appropriate, in place of EPA's.

DMR means ''Discharge Monitoring Report.''

Draft permit means a document prepared under § 124.6 indicating the Director's tentative decision to issue or deny, modify, revoke and reissue, terminate, or reissue a ''permit.'' A notice of intent to terminate a permit, and a notice of intent to deny a permit, as discussed in § 124.5, are types of ''draft permits.'' A denial of a request for modification, revocation and reissuance, or termination, as discussed in § 124.5, is not a ''draft permit.'' A ''proposed permit'' is not a ''draft permit.''

Effluent limitation means any restriction imposed by the Director on quantities, discharge rates, and concentrations of ''pollutants'' which are ''discharged'' from ''point sources'' into ''waters of the United States,'' the waters of the ''contiguous zone,'' or the ocean.

Effluent limitations guidelines means a regulation published by the Administrator under section 304(b) of CWA to adopt or revise ''effluent limitations.''

Environmental Protection Agency (''EPA'') means the United States Environmental Protection Agency.

EPA means the United States ''Environmental Protection Agency.''

Facility or activity means any NPDES ''point source'' or any other facility or activity (including land or appurtenances thereto) that is subject to regulation under the NPDES program.

Federal Indian reservation means all land within the limits of any Indian reservation under the jurisdiction of the United States Government, notwithstanding the issuance of any patent, and including rights-of-way running through the reservation.

General permit means an NPDES ''permit'' issued under § 122.28 authorizing a category of discharges under the CWA within a geographical area.

Hazardous substance means any substance designated under 40 CFR part 116 pursuant to section 311 of CWA.

Indian Tribe means any Indian Tribe, band, group, or community recognized by the Secretary of the Interior and exercising governmental authority over a Federal Indian reservation.

Indirect discharger means a nondomestic discharger introducing ''pollutants'' to a ''publicly owned treatment works.''

Interstate agency means an agency of two or more States established by or under an agreement or compact approved by the Congress, or any other agency of two or more States having substantial powers or duties pertaining to the control of pollution as determined and approved by the Administrator under the CWA and regulations.

Major facility means any NPDES ''facility or activity'' classified as such by the Regional Administrator, or, in the case of ''approved State programs,'' the Regional Administrator in conjunction with the State Director.

Maximum daily discharge limitation means the highest allowable ''daily discharge.''

Municipality means a city, town, borough, county, parish, district, association, or other public body created by or under State law and having jurisdiction over disposal of sewage, industrial wastes, or other wastes, or an Indian tribe or an authorized Indian tribal organization, or a designated and approved management agency under section 208 of CWA.

National Pollutant Discharge Elimination System (NPDES) means the national program for issuing, modifying, revoking and reissuing, terminating, monitoring and enforcing permits, and imposing and enforcing pretreatment requirements, under sections 307, 402, 318, and 405 of CWA. The term includes an ''approved program.''

New discharger means any building, structure, facility, or installation:

(a) From which there is or may be a ''discharge of pollutants;''

(b) That did not commence the ''discharge of pollutants'' at a particular ''site'' prior to August 13, 1979;

(c) Which is not a ''new source;'' and

(d) Which has never received a finally effective NDPES permit for discharges at that ''site.''

This definition includes an ''indirect discharger'' which commences discharging into ''waters of the United States'' after August 13, 1979. It also includes any existing mobile point source (other than an offshore or coastal oil and gas exploratory drilling rig or a coastal oil and gas developmental drilling rig) such as a seafood processing rig, seafood processing vessel, or aggregate plant, that begins discharging at a ''site'' for which it does not have a permit; and any offshore or coastal mobile oil and gas exploratory drilling rig or coastal mobile oil and gas developmental drilling rig that commences the discharge of pollutants after August 13, 1979, at a ''site'' under EPA's permitting jurisdiction for which it is not covered by an individual or general permit and which is located in an area determined by the Regional Administrator in the issuance of a final permit to be an area or biological concern. In determining whether an area is an area of biological concern, the Regional Administrator shall consider the factors specified in 40 CFR 125.122(a) (1) through (10).

An offshore or coastal mobile exploratory drilling rig or coastal mobile developmental drilling rig will be considered a ''new discharger'' only for the duration of its discharge in an area of biological concern.

New source means any building, structure, facility, or installation from which there is or may be a ''discharge of pollutants,'' the construction of which commenced:

(a) After promulgation of standards of performance under section 306 of CWA which are applicable to such source, or

(b) After proposal of standards of performance in accordance with section 306 of CWA which are applicable to such source, but only if the standards are promulgated in accordance with section 306 within 120 days of their proposal.

NPDES means ''National Pollutant Discharge Elimination System.''

Owner or operator means the owner or operator of any ''facility or activity'' subject to regulation under the NPDES program.

Permit means an authorization, license, or equivalent control document issued by EPA or an ''approved State'' to implement the requirements of this part and parts 123 and 124. ''Permit'' includes an NPDES ''general permit'' (§ 122.28). Permit does not include any

permit which has not yet been the subject of final agency action, such as a ''draft permit'' or a ''proposed permit.''

Person means an individual, association, partnership, corporation, municipality, State or Federal agency, or an agent or employee thereof.

Point source means any discernible, confined, and discrete conveyance, including but not limited to, any pipe, ditch, channel, tunnel, conduit, well, discrete fissure, container, rolling stock, concentrated animal feeding operation, landfill leachate collection system, vessel or other floating craft from which pollutants are or may be discharged. This term does not include return flows from irrigated agriculture or agricultural storm water runoff. (See § 122.3).

Pollutant means dredged spoil, solid waste, incinerator residue, filter backwash, sewage, garbage, sewage sludge, munitions, chemical wastes, biological materials, radioactive materials (except those regulated under the Atomic Energy Act of 1954, as amended (42 U.S.C. 2011 *et seq.*)), heat, wrecked or discarded equipment, rock, sand, cellar dirt and industrial, municipal, and agricultural waste discharged into water. It does not mean:

(a) Sewage from vessels; or

(b) Water, gas, or other material which is injected into a well to facilitate production of oil or gas, or water derived in association with oil and gas production and disposed of in a well, if the well used either to facilitate production or for disposal purposes is approved by authority of the State in which the well is located, and if the State determines that the injection or disposal will not result in the degradation of ground or surface water resources.

NOTE: Radioactive materials covered by the Atomic Energy Act are those encompassed in its definition of source, byproduct, or special nuclear materials. Examples of materials not covered include radium and accelerator-produced isotopes. See *Train* v. *Colorado Public Interest Research Group, Inc.*, 426 U.S. 1 (1976).

POTW means ''publicly owned treatment works.''

Primary industry category means any industry category listed in the NRDC settlement agreement (*Natural Resources Defense Council et al.* v. *Train*, 8 E.R.C. 2120 (D.D.C. 1976), *modified* 12 E.R.C. 1833 (D.D.C. 1979)); also listed in appendix A of part 122.

Privately owned treatment works means any device or system which is (a) used to treat wastes from any facility whose operator is not the operator of the treatment works and (b) not a ''POTW.''

Process wastewater means any water which, during manufacturing or processing, comes into direct contact with or results from the production or use of any raw material, intermediate product, finished product, byproduct, or waste product.

Proposed permit means a State NPDES ''permit'' prepared after the close of the public comment period (and, when applicable, any public hearing and administrative appeals) which is sent to EPA for review before final issuance by the State. A ''proposed permit'' is not a ''draft permit.''

Publicly owned treatment works (''POTW'') means any device or system used in the treatment (including recycling and reclamation) of municipal sewage or industrial wastes of a liquid nature which is owned by a ''State'' or ''municipality.'' This definition includes sewers, pipes, or other conveyances only if they convey wastewater to a POTW providing treatment.

Recommencing discharger means a source which recommences discharge after terminating operations.

Regional Administrator means the Regional Administrator of the appropriate Regional Office of the Environmental Protection Agency or the authorized representative of the Regional Administrator.

Schedule of compliance means a schedule of remedial measures included in a ''permit'', including an enforceable sequence of interim requirements (for example, actions, operations, or milestone events) leading to compliance with the CWA and regulations.

Secondary industry category means any industry category which is not a ''primary industry category.''

Secretary means the Secretary of the Army, acting through the Chief of Engineers.

Septage means the liquid and solid material pumped from a septic tank,

cesspool, or similar domestic sewage treatment system, or a holding tank when the system is cleaned or maintained.

Sewage from vessels means human body wastes and the wastes from toilets and other receptacles intended to receive or retain body wastes that are discharged from vessels and regulated under section 312 of CWA, except that with respect to commercial vessels on the Great Lakes this term includes graywater. For the purposes of this definition, ''graywater'' means galley, bath, and shower water.

Sewage Sludge means any solid, semisolid, or liquid residue removed during the treatment of municipal waste water or domestic sewage. Sewage sludge includes, but is not limited to, solids removed during primary, secondary, or advanced waste water treatment, scum, septage, portable toilet pumpings, type III marine sanitation device pumpings (33 CFR part 159), and sewage sludge products. Sewage sludge does not include grit or screenings, or ash generated during the incineration of sewage sludge.

Sewage sludge use or disposal practice means the collection, storage, treatment, transportation, processing, monitoring, use, or disposal of sewage sludge.

Site means the land or water area where any ''facility or activity'' is physically located or conducted, including adjacent land used in connection with the facility or activity.

Sludge-only facility means any ''treatment works treating domestic sewage'' whose methods of sewage sludge use or disposal are subject to regulations promulgated pursuant to section 405(d) of the CWA, and is required to obtain a permit under § 122.1(b)(3) of this part.

Standards for sewage sludge use or disposal means the regulations promulgated pursuant to section 405(d) of the CWA which govern minimum requirements for sludge quality, management practices, and monitoring and reporting applicable to sewage sludge or the use or disposal of sewage sludge by any person.

State means any of the 50 States, the District of Columbia, Guam, the Commonwealth of Puerto Rico, the Virgin Islands, American Samoa, the Commonwealth of the Northern Mariana Islands, the Trust Territory of the Pacific Islands, or an Indian Tribe as defined in these regulations which meets the requirements of § 123.31 of this chapter.

State Director means the chief administrative officer of any State or interstate agency operating an ''approved program,'' or the delegated representative of the State Director. If responsibility is divided among two or more State or interstate agencies, ''State Director'' means the chief administrative officer of the State or interstate agency authorized to perform the particular procedure or function to which reference is made.

State/EPA Agreement means an agreement between the Regional Administrator and the State which coordinates EPA and State activities, responsibilities and programs including those under the CWA programs.

Total dissolved solids means the total dissolved (filterable) solids as determined by use of the method specified in 40 CFR part 136.

Toxic pollutant means any pollutant listed as toxic under section 307(a)(1) or, in the case of ''sludge use or disposal practices,'' any pollutant identified in regulations implementing section 405(d) of the CWA.

Treatment works treating domestic sewage means a POTW or any other sewage sludge or waste water treatment devices or systems, regardless of ownership (including federal facilities), used in the storage, treatment, recycling, and reclamation of municipal or domestic sewage, including land dedicated for the disposal of sewage sludge. This definition does not include septic tanks or similar devices. For purposes of this definition, ''domestic sewage'' includes waste and waste water from humans or household operations that are discharged to or otherwise enter a treatment works. In States where there is no approved State sludge management program under section 405(f) of the CWA, the Regional Administrator may designate any person subject to the standards for sewage sludge use and disposal in 40 CFR part 503 as a ''treatment works treating domestic sewage,'' where he or she finds that there is a potential for adverse effects

on public health and the environment from poor sludge quality or poor sludge handling, use or disposal practices, or where he or she finds that such designation is necessary to ensure that such person is in compliance with 40 CFR part 503.

Variance means any mechanism or provision under section 301 or 316 of CWA or under 40 CFR part 125, or in the applicable ''effluent limitations guidelines'' which allows modification to or waiver of the generally applicable effluent limitation requirements or time deadlines of CWA. This includes provisions which allow the establishment of alternative limitations based on fundamentally different factors or on sections 301(c), 301(g), 301(h), 301(i), or 316(a) of CWA.

Waters of the United States or *waters of the U.S.* means:

(a) All waters which are currently used, were used in the past, or may be susceptible to use in interstate or foreign commerce, including all waters which are subject to the ebb and flow of the tide;

(b) All interstate waters, including interstate ''wetlands;''

(c) All other waters such as intrastate lakes, rivers, streams (including intermittent streams), mudflats, sandflats, ''wetlands,'' sloughs, prairie potholes, wet meadows, playa lakes, or natural ponds the use, degradation, or destruction of which would affect or could affect interstate or foreign commerce including any such waters:

(1) Which are or could be used by interstate or foreign travelers for recreational or other purposes;

(2) From which fish or shellfish are or could be taken and sold in interstate or foreign commerce; or

(3) Which are used or could be used for industrial purposes by industries in interstate commerce;

(d) All impoundments of waters otherwise defined as waters of the United States under this definition;

(e) Tributaries of waters identified in paragraphs (a) through (d) of this definition;

(f) The territorial sea; and

(g) ''Wetlands'' adjacent to waters (other than waters that are themselves wetlands) identified in paragraphs (a) through (f) of this definition.

Waste treatment systems, including treatment ponds or lagoons designed to meet the requirements of CWA (other than cooling ponds as defined in 40 CFR 423.11(m) which also meet the criteria of this definition) are not waters of the United States. This exclusion applies only to manmade bodies of water which neither were originally created in waters of the United States (such as disposal area in wetlands) nor resulted from the impoundment of waters of the United States. [See Note 1 of this section.] Waters of the United States do not include prior converted cropland. Notwithstanding the determination of an area's status as prior converted cropland by any other federal agency, for the purposes of the Clean Water Act, the final authority regarding Clean Water Act jurisdiction remains with EPA.

Wetlands means those areas that are inundated or saturated by surface or groundwater at a frequency and duration sufficient to support, and that under normal circumstances do support, a prevalence of vegetation typically adapted for life in saturated soil conditions. Wetlands generally include swamps, marshes, bogs, and similar areas.

Whole effluent toxicity means the aggregate toxic effect of an effluent measured directly by a toxicity test.

NOTE: At 45 FR 48620, July 21, 1980, the Environmental Protection Agency suspended until further notice in § 122.2, the last sentence, beginning ''This exclusion applies . . .'' in the definition of ''Waters of the United States.'' This revision continues that suspension.[1]

(Clean Water Act (33 U.S.C. 1251 *et seq.*), Safe Drinking Water Act (42 U.S.C. 300f *et seq.*), Clean Air Act (42 U.S.C. 7401 *et seq.*), Resource Conservation and Recovery Act (42 U.S.C. 6901 *et seq.*))

[48 FR 14153, Apr. 1, 1983, as amended at 48 FR 39619, Sept. 1, 1983; 50 FR 6940, 6941, Feb. 19, 1985; 54 FR 254, Jan. 4, 1989; 54 FR 18781, May 2, 1989; 54 FR 23895, June 2, 1989; 58 FR 45039, Aug. 25, 1993; 58 FR 67980, Dec. 22, 1993]

§ 122.3 Exclusions.

The following discharges do not require NPDES permits:

[1] EDITORIAL NOTE: The words ''This revision'' refer to the document published at 48 FR 14153, Apr. 1, 1983.

(a) Any discharge of sewage from vessels, effluent from properly functioning marine engines, laundry, shower, and galley sink wastes, or any other discharge incidental to the normal operation of a vessel. This exclusion does not apply to rubbish, trash, garbage, or other such materials discharged overboard; nor to other discharges when the vessel is operating in a capacity other than as a means of transportation such as when used as an energy or mining facility, a storage facility or a seafood processing facility, or when secured to a storage facility or a seafood processing facility, or when secured to the bed of the ocean, contiguous zone or waters of the United States for the purpose of mineral or oil exploration or development.

(b) Discharges of dredged or fill material into waters of the United States which are regulated under section 404 of CWA.

(c) The introduction of sewage, industrial wastes or other pollutants into publicly owned treatment works by indirect dischargers. Plans or agreements to switch to this method of disposal in the future do not relieve dischargers of the obligation to have and comply with permits until all discharges of pollutants to waters of the United States are eliminated. (See also § 122.47(b)). This exclusion does not apply to the introduction of pollutants to privately owned treatment works or to other discharges through pipes, sewers, or other conveyances owned by a State, municipality, or other party not leading to treatment works.

(d) Any discharge in compliance with the instructions of an On-Scene Coordinator pursuant to 40 CFR part 300 (The National Oil and Hazardous Substances Pollution Contingency Plan) or 33 CFR 153.10(e) (Pollution by Oil and Hazardous Substances).

(e) Any introduction of pollutants from non point-source agricultural and silvicultural activities, including storm water runoff from orchards, cultivated crops, pastures, range lands, and forest lands, but not discharges from concentrated animal feeding operations as defined in § 122.23, discharges from concentrated aquatic animal production facilities as defined in § 122.24, discharges to aquaculture projects as defined in § 122.25, and discharges from silvicultural point sources as defined in § 122.27.

(f) Return flows from irrigated agriculture.

(g) Discharges into a privately owned treatment works, except as the Director may otherwise require under § 122.44(m).

[48 FR 14153, Apr. 1, 1983, as amended at 54 FR 254, 258, Jan. 4, 1989]

§ 122.4 Prohibitions (applicable to State NPDES programs, see § 123.25).

No permit may be issued:

(a) When the conditions of the permit do not provide for compliance with the applicable requirements of CWA, or regulations promulgated under CWA;

(b) When the applicant is required to obtain a State or other appropriate certification under section 401 of CWA and § 124.53 and that certification has not been obtained or waived;

(c) By the State Director where the Regional Administrator has objected to issuance of the permit under § 123.44;

(d) When the imposition of conditions cannot ensure compliance with the applicable water quality requirements of all affected States;

(e) When, in the judgment of the Secretary, anchorage and navigation in or on any of the waters of the United States would be substantially impaired by the discharge;

(f) For the discharge of any radiological, chemical, or biological warfare agent or high-level radioactive waste;

(g) For any discharge inconsistent with a plan or plan amendment approved under section 208(b) of CWA;

(h) For any discharge to the territorial sea, the waters of the contiguous zone, or the oceans in the following circumstances:

(1) Before the promulgation of guidelines under section 403(c) of CWA (for determining degradation of the waters of the territorial seas, the contiguous zone, and the oceans) unless the Director determines permit issuance to be in the public interest; or

(2) After promulgation of guidelines under section 403(c) of CWA, when insufficient information exists to make a reasonable judgment whether the discharge complies with them.

(i) To a new source or a new discharger, if the discharge from its construction or operation will cause or contribute to the violation of water quality standards. The owner or operator of a new source or new discharger proposing to discharge into a water segment which does not meet applicable water quality standards or is not expected to meet those standards even after the application of the effluent limitations required by sections 301(b)(1)(A) and 301(b)(1)(B) of CWA, and for which the State or interstate agency has performed a pollutants load allocation for the pollutant to be discharged, must demonstrate, before the close of the public comment period, that:

(1) There are sufficient remaining pollutant load allocations to allow for the discharge; and

(2) The existing dischargers into that segment are subject to compliance schedules designed to bring the segment into compliance with applicable water quality standards.

[48 FR 14153, Apr. 1, 1983, as amended at 50 FR 6940, Feb. 19, 1985]

§122.5 Effect of a permit.

(a) *Applicable to State programs, see §123.25.* (1) Except for any toxic effluent standards and prohibitions imposed under section 307 of the CWA and ''standards for sewage sludge use or disposal'' under 405(d) of the CWA, compliance with a permit during its term constitutes compliance, for purposes of enforcement, with sections 301, 302, 306, 307, 318, 403, and 405 (a)–(b) of CWA. However, a permit may be modified, revoked and reissued, or terminated during its term for cause as set forth in §§122.62 and 122.64.

(2) Compliance with a permit condition which implements a particular ''standard for sewage sludge use or disposal'' shall be an affirmative defense in any enforcement action brought for a violation of that ''standard for sewage sludge use or disposal'' pursuant to sections 405(e) and 309 of the CWA.

(b) *Applicable to State programs, See §123.25.* The issuance of a permit does not convey any property rights of any sort, or any exclusive privilege.

(c) The issuance of a permit does not authorize any injury to persons or property or invasion of other private rights, or any infringement of State or local law or regulations.

[48 FR 14153, Apr. 1, 1983, as amended at 54 FR 18782, May 2, 1989]

§122.6 Continuation of expiring permits.

(a) *EPA permits.* When EPA is the permit-issuing authority, the conditions of an expired permit continue in force under 5 U.S.C. 558(c) until the effective date of a new permit (see §124.15) if:

(1) The permittee has submitted a timely application under §122.21 which is a complete (under §122.21(e)) application for a new permit; and

(2) The Regional Administrator, through no fault of the permittee does not issue a new permit with an effective date under §124.15 on or before the expiration date of the previous permit (for example, when issuance is impracticable due to time or resource constraints).

(b) *Effect.* Permits continued under this section remain fully effective and enforceable.

(c) *Enforcement.* When the permittee is not in compliance with the conditions of the expiring or expired permit the Regional Administrator may choose to do any or all of the following:

(1) Initiate enforcement action based upon the permit which has been continued;

(2) Issue a notice of intent to deny the new permit under §124.6. If the permit is denied, the owner or operator would then be required to cease the activities authorized by the continued permit or be subject to enforcement action for operating without a permit;

(3) Issue a new permit under part 124 with appropriate conditions; or

(4) Take other actions authorized by these regulations.

(d) *State continuation.* (1) An EPA-issued permit does not continue in force beyond its expiration date under Federal law if at that time a State is the permitting authority. States authorized to administer the NPDES program may continue either EPA or State-issued permits until the effective date of the new permits, if State law allows. Otherwise, the facility or activity is operating without a permit from the time of expiration of the old permit to

the effective date of the State-issued new permit.

[48 FR 14153, Apr. 1, 1983, as amended at 50 FR 6940, Feb. 19, 1985]

§ 122.7 Confidentiality of information.

(a) In accordance with 40 CFR part 2, any information submitted to EPA pursuant to these regulations may be claimed as confidential by the submitter. Any such claim must be asserted at the time of submission in the manner prescribed on the application form or instructions or, in the case of other submissions, by stamping the words ''confidential business information'' on each page containing such information. If no claim is made at the time of submission, EPA may make the information available to the public without further notice. If a claim is asserted, the information will be treated in accordance with the procedures in 40 CFR part 2 (Public Information).

(b) *Applicable to State programs, see § 123.25.* Claims of confidentiality for the following information will be denied:

(1) The name and address of any permit applicant or permittee;

(2) Permit applications, permits, and effluent data.

(c) *Applicable to State programs, see § 123.25.* Information required by NPDES application forms provided by the Director under § 122.21 may not be claimed confidential. This includes information submitted on the forms themselves and any attachments used to supply information required by the forms.

Subpart B—Permit Application and Special NPDES Program Requirements

§ 122.21 Application for a permit (applicable to State programs, see § 123.25).

(a) *Duty to apply.* Any person who discharges or proposes to discharge pollutants or who owns or operates a ''sludge-only facility'' and who does not have an effective permit, except persons covered by general permits under § 122.28, excluded under § 122.3, or a user of a privately owned treatment works unless the Director requires otherwise under § 122.44(m), shall submit a complete application (which shall include a BMP program if necessary under 40 CFR 125.102) to the Director in accordance with this section and part 124.

(b) *Who applies?* When a facility or activity is owned by one person but is operated by another person, it is the operator's duty to obtain a permit.

(c) *Time to apply.* (1) Any person proposing a new discharge, shall submit an application at least 180 days before the date on which the discharge is to commence, unless permission for a later date has been granted by the Director. Facilities proposing a new discharge of storm water associated with industrial activity shall submit an application 180 days before that facility commences industrial activity which may result in a discharge of storm water associated with that industrial activity. Facilities described under § 122.26(b)(14)(x) shall submit applications at least 90 days before the date on which construction is to commence. Different submittal dates may be required under the terms of applicable general permits. Persons proposing a new discharge are encouraged to submit their applications well in advance of the 90 or 180 day requirements to avoid delay. See also paragraph (k) of this section and § 122.26 (c)(1)(i)(G) and (c)(1)(ii). New discharges composed entirely of storm water, other than those dischargers identified by § 122.26(a)(1), shall apply for and obtain a permit according to the application requirements in § 122.26(g).

(2) *Permits under section 405(f) of CWA.* (i) Any existing ''treatment works treating domestic sewage'' required to have, or requesting site-specific pollutant limits as provided in 40 CFR part 503, must submit the permit application information required by paragraph (d)(3)(ii) of this section within 180 days after publication of a standard applicable to its sewage sludge use or disposal practice(s). After this 180 day period, ''treatment works treating domestic sewage'' may only apply for site-specific pollutant limits for good cause and such requests must be made within 180 days of becoming aware that good cause exists.

(ii) Any ''treatment works treating domestic sewage'' with a currently effective NPDES permit, not addressed under paragraph (c)(2)(i) of this section, must submit the application information required by paragraph (d)(3)(ii) of this section at the time of its next NPDES permit renewal application. Such information must be submitted in accordance with paragraph (d) of this section.

(iii) Any other existing ''treatment works treating domestic sewage'' not addressed under paragraphs (c)(2) (i) or (ii) of this section must submit the information listed in paragraphs (c)(2)(iii) (A)–(E) of this section, to the Director within 1 year after publication of a standard applicable to its sewage sludge use or disposal practice(s). The Director shall determine when such ''treatment works treating domestic sewage'' must apply for a permit.

(A) Name, mailing address and location of the ''treatment works treating domestic sewage;''

(B) The operator's name, address, telephone number, ownership status, and status as Federal, State, private, public or other entity;

(C) A description of the sewage sludge use or disposal practices (including, where applicable, the location of any sites where sewage sludge is transferred for treatment, use, or disposal, as well as the name of the applicator or other contractor who applies the sewage sludge to land, if different from the ''treatment works treating domestic sewage,'' and the name of any distributors if the sewage sludge is sold or given away in a bag or similar enclosure for application to the land, if different from the ''treatment works treating domestic sewage'');

(D) Annual amount of sewage sludge generated, treated, used or disposed (dry weight basis); and

(E) The most recent data the ''treatment works treating domestic sewage'' may have on the quality of the sewage sludge.

(iv) Notwithstanding paragraphs (c)(2) (i), (ii), or (iii) of this section, the Director may require permit applications from any ''treatment works treating domestic sewage'' at any time if the Director determines that a permit is necessary to protect public health and the environment from any potential adverse effects that may occur from toxic pollutants in sewage sludge.

(v) Any ''treatment works treating domestic sewage'' that commences operations after promulgation of an applicable ''standard for sewage sludge use or disposal'' shall submit an application to the Director at least 180 days prior to the date proposed for commencing operations.

(d) *Duty to reapply*. (1) Any POTW with a currently effective permit shall submit a new application at least 180 days before the expiration date of the existing permit, unless permission for a later date has been granted by the Director. (The Director shall not grant permission for applications to be submitted later than the expiration date of the existing permit.)

(2) All other permittees with currently effective permits shall submit a new application 180 days before the existing permit expires, except that:

(i) The Regional Administrator may grant permission to submit an application later than the deadline for submission otherwise applicable, but no later than the permit expiration date; and

(3)(i) All applicants for EPA-issued permits, other than POTWs, new sources, and ''sludge-only facilities,'' must complete Forms 1 and either 2b or 2c of the consolidated permit application forms to apply under § 122.21 and paragraphs (f), (g), and (h) of this section.

(ii) In addition to any other applicable requirements in this part, all POTWs and other ''treatment works treating domestic sewage,'' including ''sludge-only facilities,'' must submit with their applications the information listed at 40 CFR 501.15 (a)(2) within the time frames established in paragraph (c)(2) of this section.

(e) *Completeness.* The Director shall not issue a permit before receiving a complete application for a permit except for NPDES general permits. An application for a permit is complete when the Director receives an application form and any supplemental information which are completed to his or her satisfaction. The completeness of any application for a permit shall be

judged independently of the status of any other permit application or permit for the same facility or activity. For EPA administered NPDES programs, an application which is reviewed under § 124.3 is complete when the Director receives either a complete application or the information listed in a notice of deficiency.

(f) *Information requirements.* All applicants for NPDES permits shall provide the following information to the Director, using the application form provided by the Director (additional information required of applicants is set forth in paragraphs (g) through (k) of this section).

(1) The activities conducted by the applicant which require it to obtain an NPDES permit.

(2) Name, mailing address, and location of the facility for which the application is submitted.

(3) Up to four SIC codes which best reflect the principal products or services provided by the facility.

(4) The operator's name, address, telephone number, ownership status, and status as Federal, State, private, public, or other entity.

(5) Whether the facility is located on Indian lands.

(6) A listing of all permits or construction approvals received or applied for under any of the following programs:

(i) Hazardous Waste Management program under RCRA.

(ii) UIC program under SDWA.

(iii) NPDES program under CWA.

(iv) Prevention of Significant Deterioration (PSD) program under the Clean Air Act.

(v) Nonattainment program under the Clean Air Act.

(vi) National Emission Standards for Hazardous Pollutants (NESHAPS) preconstruction approval under the Clean Air Act.

(vii) Ocean dumping permits under the Marine Protection Research and Sanctuaries Act.

(viii) Dredge or fill permits under section 404 of CWA.

(ix) Other relevant environmental permits, including State permits.

(7) A topographic map (or other map if a topographic map is unavailable) extending one mile beyond the property boundaries of the source, depicting the facility and each of its intake and discharge structures; each of its hazardous waste treatment, storage, or disposal facilities; each well where fluids from the facility are injected underground; and those wells, springs, other surface water bodies, and drinking water wells listed in public records or otherwise known to the applicant in the map area.

(8) A brief description of the nature of the business.

(g) *Application requirements for existing manufacturing, commercial, mining, and silvicultural dischargers.* Existing manufacturing, commercial mining, and silvicultural dischargers applying for NPDES permits, except for those facilities subject to the requirements of § 122.21(h), shall provide the following information to the Director, using application forms provided by the Director.

(1) *Outfall location.* The latitude and longitude to the nearest 15 seconds and the name of the receiving water.

(2) *Line drawing.* A line drawing of the water flow through the facility with a water balance, showing operations contributing wastewater to the effluent and treatment units. Similar processes, operations, or production areas may be indicated as a single unit, labeled to correspond to the more detailed identification under paragraph (g)(3) of this section. The water balance must show approximate average flows at intake and discharge points and between units, including treatment units. If a water balance cannot be determined (for example, for certain mining activities), the applicant may provide instead a pictorial description of the nature and amount of any sources of water and any collection and treatment measures.

(3) *Average flows and treatment.* A narrative identification of each type of process, operation, or production area which contributes wastewater to the effluent for each outfall, including process wastewater, cooling water, and stormwater runoff; the average flow which each process contributes; and a description of the treatment the wastewater receives, including the ultimate disposal of any solid or fluid

wastes other than by discharge. Processes, operations, or production areas may be described in general terms (for example, ''dye-making reactor'', ''distillation tower''). For a privately owned treatment works, this information shall include the identity of each user of the treatment works. The average flow of point sources composed of storm water may be estimated. The basis for the rainfall event and the method of estimation must be indicated.

(4) *Intermittent flows.* If any of the discharges described in paragraph (g)(3) of this section are intermittent or seasonal, a description of the frequency, duration and flow rate of each discharge occurrence (except for stormwater runoff, spillage or leaks).

(5) *Maximum production.* If an effluent guideline promulgated under section 304 of CWA applies to the applicant and is expressed in terms of production (or other measure of operation), a reasonable measure of the applicant's actual production reported in the units used in the applicable effluent guideline. The reported measure must reflect the actual production of the facility as required by § 122.45(b)(2).

(6) *Improvements.* If the applicant is subject to any present requirements or compliance schedules for construction, upgrading or operation of waste treatment equipment, an identification of the abatement requirement, a description of the abatement project, and a listing of the required and projected final compliance dates.

(7) *Effluent characteristics.* Information on the discharge of pollutants specified in this paragraph (except information on storm water discharges which is to be provided as specified in § 122.26). When ''quantitative data'' for a pollutant are required, the applicant must collect a sample of effluent and analyze it for the pollutant in accordance with analytical methods approved under 40 CFR part 136. When no analytical method is approved the applicant may use any suitable method but must provide a description of the method. When an applicant has two or more outfalls with substantially identical effluents, the Director may allow the applicant to test only one outfall and report that the quantitative data also apply to the substantially identical outfalls. The requirements in paragraphs (g)(7) (iii) and (iv) of this section that an applicant must provide quantitative data for certain pollutants known or believed to be present do not apply to pollutants present in a discharge solely as the result of their presence in intake water; however, an applicant must report such pollutants as present. Grab samples must be used for pH, temperature, cyanide, total phenols, residual chlorine, oil and grease, fecal coliform and fecal streptococcus. For all other pollutants, 24-hour composite samples must be used. However, a minimum of one grab sample may be taken for effluents from holding ponds or other impoundments with a retention period greater than 24 hours. In addition, for discharges other than storm water discharges, the Director may waive composite sampling for any outfall for which the applicant demonstrates that the use of an automatic sampler is infeasible and that the minimum of four (4) grab samples will be a representative sample of the effluent being discharged. For storm water discharges, all samples shall be collected from the discharge resulting from a storm event that is greater than 0.1 inch and at least 72 hours from the previously measurable (greater than 0.1 inch rainfall) storm event. Where feasible, the variance in the duration of the event and the total rainfall of the event should not exceed 50 percent from the average or median rainfall event in that area. For all applicants, a flow-weighted composite shall be taken for either the entire discharge or for the first three hours of the discharge. The flow-weighted composite sample for a storm water discharge may be taken with a continuous sampler or as a combination of a minimum of three sample aliquots taken in each hour of discharge for the entire discharge or for the first three hours of the discharge, with each aliquot being separated by a minimum period of fifteen minutes (applicants submitting permit applications for storm water discharges under § 122.26(d) may collect flow weighted composite samples using different protocols with respect to the time duration between the collection

of sample aliquots, subject to the approval of the Director). However, a minimum of one grab sample may be taken for storm water discharges from holding ponds or other impoundments with a retention period greater than 24 hours. For a flow-weighted composite sample, only one analysis of the composite of aliquots is required. For storm water discharge samples taken from discharges associated with industrial activities, quantitative data must be reported for the grab sample taken during the first thirty minutes (or as soon thereafter as practicable) of the discharge for all pollutants specified in § 122.26(c)(1). For all storm water permit applicants taking flow-weighted composites, quantitative data must be reported for all pollutants specified in § 122.26 except pH, temperature, cyanide, total phenols, residual chlorine, oil and grease, fecal coliform, and fecal streptococcus. The Director may allow or establish appropriate site-specific sampling procedures or requirements, including sampling locations, the season in which the sampling takes place, the minimum duration between the previous measurable storm event and the storm event sampled, the minimum or maximum level of precipitation required for an appropriate storm event, the form of precipitation sampled (snow melt or rain fall), protocols for collecting samples under 40 CFR part 136, and additional time for submitting data on a case-by-case basis. An applicant is expected to ''know or have reason to believe'' that a pollutant is present in an effluent based on an evaluation of the expected use, production, or storage of the pollutant, or on any previous analyses for the pollutant. (For example, any pesticide manufactured by a facility may be expected to be present in contaminated storm water runoff from the facility.)

(i)(A) Every applicant must report quantitative data for every outfall for the following pollutants:

Biochemial Oxygen Demand (BOD_5)
Chemical Oxygen Demand
Total Organic Carbon
Total Suspended Solids
Ammonia (as N)
Temperature (both winter and summer)
pH

(B) The Director may waive the reporting requirements for individual point sources or for a particular industry category for one or more of the pollutants listed in paragraph (g)(7)(i)(A) of this section if the applicant has demonstrated that such a waiver is appropriate because information adequate to support issuance of a permit can be obtained with less stringent requirements.

(ii) Each applicant with processes in one or more primary industry category (see appendix A to part 122) contributing to a discharge must report quantitative data for the following pollutants in each outfall containing process wastewater:

(A) The organic toxic pollutants in the fractions designated in table I of appendix D of this part for the applicant's industrial category or categories unless the applicant qualifies as a small business under paragraph (g)(8) of this section. Table II of appendix D of this part lists the organic toxic pollutants in each fraction. The fractions result from the sample preparation required by the analytical procedure which uses gas chromotography/mass spectrometry. A determination that an applicant falls within a particular industrial category for the purposes of selecting fractions for testing is not conclusive as to the applicant's inclusion in that category for any other purposes. [See Notes 2, 3, and 4 of this section.]

(B) The pollutants listed in table III of appendix D of this part (the toxic metals, cyanide, and total phenols).

(iii)(A) Each applicant must indicate whether it knows or has reason to believe that any of the pollutants in table IV of appendix D (certain conventional and nonconventional pollutants) is discharged from each outfall. If an applicable effluent limitations guideline either directly limits the pollutant or, by its express terms, indirectly limits the pollutant through limitations on an indicator, the applicant must report quantitative data. For every pollutant discharged which is not so limited in an effluent limitations guideline, the applicant must either report quantitative data or briefly describe the reasons the pollutant is expected to be discharged.

(B) Each applicant must indicate whether it knows or has reason to believe that any of the pollutants listed in table II or table III of appendix D (the toxic pollutants and total phenols) for which quantitative data are not otherwise required under paragraph (g)(7)(ii) of this section, is discharged from each outfall. For every pollutant expected to be discharged in concentrations of 10 ppb or greater the applicant must report quantitative data. For acrolein, acrylonitrile, 2,4 dinitrophenol, and 2-methyl-4,6 dinitrophenol, where any of these four pollutants are expected to be discharged in concentrations of 100 ppb or greater the applicant must report quantitative data. For every pollutant expected to be discharged in concentrations less than 10 ppb, or in the case of acrolein, acrylonitrile, 2,4 dinitrophenol, and 2-methyl-4,6 dinitrophenol, in concentrations less than 100 ppb, the applicant must either submit quantitative data or briefly describe the reasons the pollutant is expected to be discharged. An applicant qualifying as a small business under paragraph (g)(8) of this section is not required to analyze for pollutants listed in table II of appendix D (the organic toxic pollutants).

(iv) Each applicant must indicate whether it knows or has reason to believe that any of the pollutants in table V of appendix D of this part (certain hazardous substances and asbestos) are discharged from each outfall. For every pollutant expected to be discharged, the applicant must briefly describe the reasons the pollutant is expected to be discharged, and report any quantitative data it has for any pollutant.

(v) Each applicant must report qualitative data, generated using a screening procedure not calibrated with analytical standards, for 2,3,7,8-tetrachlorodibenzo-p-dioxin (TCDD) if it:

(A) Uses or manufactures 2,4,5-trichlorophenoxy acetic acid (2,4,5,-T); 2-(2,4,5-trichlorophenoxy) propanoic acid (Silvex, 2,4,5,-TP); 2-(2,4,5-trichlorophenoxy) ethyl, 2,2-dichloropropionate (Erbon); O,O-dimethyl O-(2,4,5-trichlorophenyl) phosphorothioate (Ronnel); 2,4,5-trichlorophenol (TCP); or hexachlorophene (HCP); or

(B) Knows or has reason to believe that TCDD is or may be present in an effluent.

(8) *Small business exemption.* An applicant which qualifies as a small business under one of the following criteria is exempt from the requirements in paragraph (g)(7)(ii)(A) or (g)(7)(iii)(A) of this section to submit quantitative data for the pollutants listed in table II of appendix D of this part (the organic toxic pollutants):

(i) For coal mines, a probable total annual production of less than 100,000 tons per year.

(ii) For all other applicants, gross total annual sales averaging less than $100,000 per year (in second quarter 1980 dollars).

(9) *Used or manufactured toxics.* A listing of any toxic pollutant which the applicant currently uses or manufactures as an intermediate or final product or byproduct. The Director may waive or modify this requirement for any applicant if the applicant demonstrates that it would be unduly burdensome to identify each toxic pollutant and the Director has adequate information to issue the permit.

(10) [Reserved]

(11) *Biological toxicity tests.* An identification of any biological toxicity tests which the applicant knows or has reason to believe have been made within the last 3 years on any of the applicant's discharges or on a receiving water in relation to a discharge.

(12) *Contract analyses.* If a contract laboratory or consulting firm performed any of the analyses required by paragraph (g)(7) of this section, the identity of each laboratory or firm and the analyses performed.

(13) *Additional information.* In addition to the information reported on the application form, applicants shall provide to the Director, at his or her request, such other information as the Director may reasonably require to assess the discharges of the facility and to determine whether to issue an NPDES permit. The additional information may include additional quantitative data and bioassays to assess the relative toxicity of discharges to

aquatic life and requirements to determine the cause of the toxicity.

(h) *Application requirements for manufacturing, commercial, mining and silvicultural facilities which discharge only non-process wastewater.* Except for stormwater discharges, all manufacturing, commercial, mining and silvicultural dischargers applying for NPDES permits which discharge only non-process wastewater not regulated by an effluent limitations guideline or new source performance standard shall provide the following information to the Director, using application forms provided by the Director:

(1) *Outfall location.* Outfall number, latitude and longitude to the nearest 15 seconds, and the name of the receiving water.

(2) *Discharge date* (for new dischargers). Date of expected commencement of discharge.

(3) *Type of waste.* An identification of the general type of waste discharged, or expected to be discharged upon commencement of operations, including sanitary wastes, restaurant or cafeteria wastes, or noncontact cooling water. An identification of cooling water additives (if any) that are used or expected to be used upon commencement of operations, along with their composition if existing composition is available.

(4) *Effluent characteristics.* (i) Quantitative data for the pollutants or parameters listed below, unless testing is waived by the Director. The quantitative data may be data collected over the past 365 days, if they remain representative of current operations, and must include maximum daily value, average daily value, and number of measurements taken. The applicant must collect and analyze samples in accordance with 40 CFR part 136. Grab samples must be used for pH, temperature, oil and grease, total residual chlorine, and fecal coliform. For all other pollutants, 24-hour composite samples must be used. New dischargers must include estimates for the pollutants or parameters listed below instead of actual sampling data, along with the source of each estimate. All levels must be reported or estimated as concentration and as total mass, except for flow, pH, and temperature.

(A) Biochemical Oxygen Demand (BOD_5).

(B) Total Suspended Solids (TSS).

(C) Fecal Coliform (if believed present or if sanitary waste is or will be discharged).

(D) Total Residual Chlorine (if chlorine is used).

(E) Oil and Grease.

(F) Chemical Oxygen Demand (COD) (if non-contact cooling water is or will be discharged).

(G) Total Organic Carbon (TOC) (if non-contact cooling water is or will be discharged).

(H) Ammonia (as N).

(I) Discharge Flow.

(J) pH.

(K) Temperature (Winter and Summer).

(ii) The Director may waive the testing and reporting requirements for any of the pollutants or flow listed in paragraph (h)(4)(i) of this section if the applicant submits a request for such a waiver before or with his application which demonstrates that information adequate to support issuance of a permit can be obtained through less stringent requirements.

(iii) If the applicant is a new discharger, he must complete and submit Item IV of Form 2e (see § 122.21(h)(4)) by providing quantitative data in accordance with that section no later than two years after commencement of discharge. However, the applicant need not complete those portions of Item IV requiring tests which he has already performed and reported under the discharge monitoring requirements of his NPDES permit.

(iv) The requirements of parts i and iii of this section that an applicant must provide quantitative data or estimates of certain pollutants do not apply to pollutants present in a discharge solely as a result of their presence in intake water. However, an applicant must report such pollutants as present. Net credit may be provided for the presence of pollutants in intake water if the requirements of § 122.45(g) are met.

(5) *Flow.* A description of the frequency of flow and duration of any seasonal or intermittent discharge (except for stormwater runoff, leaks, or spills).

(6) *Treatment system.* A brief description of any system used or to be used.

(7) *Optional information.* Any additional information the applicant wishes to be considered, such as influent data for the purpose of obtaining ''net'' credits pursuant to § 122.45(g).

(8) *Certification.* Signature of certifying official under § 122.22.

(i) *Application requirements for new and existing concentrated animal feeding operations and aquatic animal production facilities.* New and existing concentrated animal feeding operations (defined in § 122.23) and concentrated aquatic animal production facilities (defined in § 122.24) shall provide the following information to the Director, using the application form provided by the Director:

(1) For concentrated animal feeding operations:

(i) The type and number of animals in open confinement and housed under roof.

(ii) The number of acres used for confinement feeding.

(iii) The design basis for the runoff diversion and control system, if one exists, including the number of acres of contributing drainage, the storage capacity, and the design safety factor.

(2) For concentrated aquatic animal production facilities:

(i) The maximum daily and average monthly flow from each outfall.

(ii) The number of ponds, raceways, and similar structures.

(iii) The name of the receiving water and the source of intake water.

(iv) For each species of aquatic animals, the total yearly and maximum harvestable weight.

(v) The calendar month of maximum feeding and the total mass of food fed during that month.

(j) *Application requirements for new and existing POTWs.* (1) The following POTWs shall provide the results of valid whole effluent biological toxicity testing to the Director:

(i) All POTWs with design influent flows equal to or greater than one million gallons per day;

(ii) All POTWs with approved pretreatment programs or POTWs required to develop a pretreatment program;

(2) In addition to the POTWs listed in paragraph (j)(1) of this section, the Director may require other POTWs to submit the results of toxicity tests with their permit applications, based on consideration of the following factors:

(i) The variability of the pollutants or pollutant parameters in the POTW effluent (based on chemical-specific information, the type of treatment facility, and types of industrial contributors);

(ii) The dilution of the effluent in the receiving water (ratio of effluent flow to receiving stream flow);

(iii) Existing controls on point or nonpoint sources, including total maximum daily load calculations for the waterbody segment and the relative contribution of the POTW;

(iv) Receiving stream characteristics, including possible or known water quality impairment, and whether the POTW discharges to a coastal water, one of the Great Lakes, or a water designated as an outstanding natural resource; or

(v) Other considerations (including but not limited to the history of toxic impact and compliance problems at the POTW), which the Director determines could cause or contribute to adverse water quality impacts.

(3) For POTWs required under paragraph (j)(1) or (j)(2) of this section to conduct toxicity testing, POTWs shall use EPA's methods or other established protocols which are scientifically defensible and sufficiently sensitive to detect aquatic toxicity. Such testing must have been conducted since the last NPDES permit reissuance or permit modification under 40 CFR 122.62(a), whichever occurred later.

(4) All POTWs with approved pretreatment programs shall provide the following information to the Director: a written technical evaluation of the need to revise local limits under 40 CFR 403.5(c)(1).

(k) *Application requirements for new sources and new discharges.* New manufacturing, commercial, mining and silvicultural dischargers applying for NPDES permits (except for new discharges of facilities subject to the requirements of paragraph (h) of this section or new discharges of storm water

associated with industrial activity which are subject to the requirements of § 122.26(c)(1) and this section (except as provided by § 122.26(c)(1)(ii)) shall provide the following information to the Director, using the application forms provided by the Director:

(1) *Expected outfall location.* The latitude and longitude to the nearest 15 seconds and the name of the receiving water.

(2) *Discharge dates.* The expected date of commencement of discharge.

(3) *Flows, sources of pollution, and treatment technologies*—(i) *Expected treatment of wastewater.* Description of the treatment that the wastewater will receive, along with all operations contributing wastewater to the effluent, average flow contributed by each operation, and the ultimate disposal of any solid or liquid wastes not discharged.

(ii) *Line drawing.* A line drawing of the water flow through the facility with a water balance as described in § 122.21(g)(2).

(iii) *Intermittent flows.* If any of the expected discharges will be intermittent or seasonal, a description of the frequency, duration and maximum daily flow rate of each discharge occurrence (except for stormwater runoff, spillage, or leaks).

(4) *Production.* If a new source performance standard promulgated under section 306 of CWA or an effluent limitation guideline applies to the applicant and is expressed in terms of production (or other measure of operation), a reasonable measure of the applicant's expected actual production reported in the units used in the applicable effluent guideline or new source performance standard as required by § 122.45(b)(2) for each of the first three years. Alternative estimates may also be submitted if production is likely to vary.

(5) *Effluent characteristics.* The requirements in paragraphs (h)(4)(i), (ii), and (iii) of this section that an applicant must provide estimates of certain pollutants expected to be present do not apply to pollutants present in a discharge solely as a result of their presence in intake water; however, an applicant must report such pollutants as present. Net credits may be provided for the presence of pollutants in intake water if the requirements of § 122.45(g) are met. All levels (except for discharge flow, temperature, and pH) must be estimated as concentration and as total mass.

(i) Each applicant must report estimated daily maximum, daily average, and source of information for each outfall for the following pollutants or parameters. The Director may waive the reporting requirements for any of these pollutants and parameters if the applicant submits a request for such a waiver before or with his application which demonstrates that information adequate to support issuance of the permit can be obtained through less stringent reporting requirements.

(A) Biochemical Oxygen Demand (BOD).

(B) Chemical Oxygen Demand (COD).

(C) Total Organic Carbon (TOC).

(D) Total Suspended Solids (TSS).

(E) Flow.

(F) Ammonia (as N).

(G) Temperature (winter and summer).

(H) pH.

(ii) Each applicant must report estimated daily maximum, daily average, and source of information for each outfall for the following pollutants, if the applicant knows or has reason to believe they will be present or if they are limited by an effluent limitation guideline or new source performance standard either directly or indirectly through limitations on an indicator pollutant: all pollutants in table IV of appendix D of part 122 (certain conventional and nonconventional pollutants).

(iii) Each applicant must report estimated daily maximum, daily average and source of information for the following pollutants if he knows or has reason to believe that they will be present in the discharges from any outfall:

(A) The pollutants listed in table III of appendix D (the toxic metals, in the discharge from any outfall: Total cyanide, and total phenols);

(B) The organic toxic pollutants in table II of appendix D (except bis (chloromethyl) ether, dichlorofluoromethane and trichlorofluoromethane). This requirement is waived for applicants with expected gross sales of less

than $100,000 per year for the next three years, and for coal mines with expected average production of less than 100,000 tons of coal per year.

(iv) The applicant is required to report that 2,3,7,8 Tetrachlorodibenzo-P-Dioxin (TCDD) may be discharged if he uses or manufactures one of the following compounds, or if he knows or has reason to believe that TCDD will or may be present in an effluent:

(A) 2,4,5-trichlorophenoxy acetic acid (2,4,5-T) (CAS #93–76–5);

(B) 2-(2,4,5-trichlorophenoxy) propanoic acid (Silvex, 2,4,5-TP) (CAS #93–72–1);

(C) 2-(2,4,5-trichlorophenoxy) ethyl 2,2-dichloropropionate (Erbon) (CAS #136–25–4);

(D) 0,0-dimethyl 0-(2,4,5-trichlorophenyl) phosphorothioate (Ronnel) (CAS #299–84–3);

(E) 2,4,5-trichlorophenol (TCP) (CAS #95–95–4); or

(F) Hexachlorophene (HCP) (CAS #70–30–4);

(v) Each applicant must report any pollutants listed in table V of appendix D (certain hazardous substances) if he believes they will be present in any outfall (no quantitative estimates are required unless they are already available).

(vi) No later than two years after the commencement of discharge from the proposed facility, the applicant is required to complete and submit Items V and VI of NPDES application Form 2c (see § 122.21(g)). However, the applicant need not complete those portions of Item V requiring tests which he has already performed and reported under the discharge monitoring requirements of his NPDES permit.

(6) *Engineering Report.* Each applicant must report the existence of any technical evaluation concerning his wastewater treatment, along with the name and location of similar plants of which he has knowledge.

(7) *Other information.* Any optional information the permittee wishes to have considered.

(8) *Certification.* Signature of certifying official under § 122.22.

(l) *Special provisions for applications from new sources.* (1) The owner or operator of any facility which may be a new source(as defined in § 122.2) and which is located in a State without an approved NPDES program must comply with the provisions of this paragaraph.

(2)(i) Before beginning any on-site construction as defined in § 122.29, the owner or operator of any facility which may be a new source must submit information to the Regional Administrator so that he or she can determine if the facility is a new source. The Regional Administrator may request any additional information needed to determine whether the facility is a new source.

(ii) The Regional Administrator shall make an initial determination whether the facility is a new source within 30 days of receiving all necessary information under paragraph (k)(2)(i) of this section.

(3) The Regional Administrator shall issue a public notice in accordance with § 124.10 of the new source determination under paragraph (k)(2) of this section. If the Regional Administrator has determined that the facility is a new source, the notice shall state that the applicant must comply with the environmental review requirements of 40 CFR 6.600 *et seq.*

(4) Any interested person may challenge the Regional Administrator's initial new source determination by requesting an evidentiary hearing under subpart E of part 124 within 30 days of issuance of the public notice of the initial determination. If all parties to the evidentiary hearing on the determination agree, the Regional Administrator may defer the hearing until after a final permit decision is made, and consolidate the hearing on the determination with any hearing on the permit.

(m) *Variance requests by non-POTWs.* A discharger which is not a publicly owned treatment works (POTW) may request a variance from otherwise applicable effluent limitations under any of the following statutory or regulatory provisions within the times specified in this paragraph:

(1) *Fundamentally different factors.* (i) A request for a variance based on the presence of ''fundamentally different factors'' from those on which the effluent limitations guideline was based shall be filed as follows:

(A) For a request from best practicable control technology currently available (BPT), by the close of the public comment period under § 124.10.

(B) For a request from best available technology economically achievable (BAT) and/or best conventional pollutant control technology (BCT), by no later than:

(*1*) July 3, 1989, for a request based on an effluent limitation guideline promulgated before February 4, 1987, to the extent July 3, 1989 is not later than that provided under previously promulgated regulations; or

(*2*) 180 days after the date on which an effluent limitation guideline is published in the FEDERAL REGISTER for a request based on an effluent limitation guideline promulgated on or after February 4, 1987.

(ii) The request shall explain how the requirements of the applicable regulatory and/or statutory criteria have been met.

(2) *Non-conventional pollutants.* A request for a variance from the BAT requirements for CWA section 301(b)(2)(F) pollutants (commonly called ''non-conventional'' pollutants) pursuant to section 301(c) of CWA because of the economic capability of the owner or operator, or pursuant to section 301(g) of the CWA (provided however that a § 301(g) variance may only be requested for ammonia; chlorine; color; iron; total phenols (4AAP) (when determined by the Administrator to be a pollutant covered by section 301(b)(2)(F)) and any other pollutant which the Administrator lists under section 301(g)(4) of the CWA) must be made as follows:

(i) For those requests for a variance from an effluent limitation based upon an effluent limitation guideline by:

(A) Submitting an initial request to the Regional Administrator, as well as to the State Director if applicable, stating the name of the discharger, the permit number, the outfall number(s), the applicable effluent guideline, and whether the discharger is requesting a section 301(c) or section 301(g) modification or both. This request must have been filed not later than:

(*1*) September 25, 1978, for a pollutant which is controlled by a BAT effluent limitation guideline promulgated before December 27, 1977; or

(*2*) 270 days after promulgation of an applicable effluent limitation guideline for guidelines promulgated after December 27, 1977; and

(B) Submitting a completed request no later than the close of the public comment period under § 124.10 demonstrating that the requirements of § 124.13 and the applicable requirements of part 125 have been met. Notwithstanding this provision, the complete application for a request under section 301(g) shall be filed 180 days before EPA must make a decision (unless the Regional Division Director establishes a shorter or longer period).

(ii) For those requests for a variance from effluent limitations not based on effluent limitation guidelines, the request need only comply with paragraph (m)(2)(i)(B) of this section and need not be preceded by an initial request under paragraph (m)(2)(i)(A) of this section.

(3)–(4) [Reserved]

(5) *Water quality related effluent limitations.* A modification under section 302(b)(2) of requirements under section 302(a) for achieving water quality related effluent limitations may be requested no later than the close of the public comment period under § 124.10 on the permit from which the modification is sought.

(6) *Thermal discharges.* A variance under CWA section 316(a) for the thermal component of any discharge must be filed with a timely application for a permit under this section, except that if thermal effluent limitations are established under CWA section 402(a)(1) or are based on water quality standards the request for a variance may be filed by the close of the public comment period under § 124.10. A copy of the request as required under 40 CFR part 125, subpart H, shall be sent simultaneously to the appropriate State or interstate certifying agency as required under 40 CFR part 125. (See § 124.65 for special procedures for section 316(a) thermal variances.)

(n) *Variance requests by POTWs.* A discharger which is a publicly owned treatment works (POTW) may request a variance from otherwise applicable effluent limitations under any of the following statutory provisions as specified in this paragraph:

(1) *Discharges into marine waters.* A request for a modification under CWA section 301(h) of requirements of CWA section 301(b)(1)(B) for discharges into marine waters must be filed in accordance with the requirements of 40 CFR part 125, subpart G.

(2) [Reserved]

(3) *Water quality based effluent limitation.* A modification under CWA section 302(b)(2) of the requirements under section 302(a) for achieving water quality based effluent limitations shall be requested no later than the close of the public comment period under § 124.10 on the permit from which the modification is sought.

(o) *Expedited variance procedures and time extensions.* (1) Notwithstanding the time requirements in paragraphs (m) and (n) of this section, the Director may notify a permit applicant before a draft permit is issued under § 124.6 that the draft permit will likely contain limitations which are eligible for variances. In the notice the Director may require the applicant as a condition of consideration of any potential variance request to submit a request explaining how the requirements of part 125 applicable to the variance have been met and may require its submission within a specified reasonable time after receipt of the notice. The notice may be sent before the permit application has been submitted. The draft or final permit may contain the alternative limitations which may become effective upon final grant of the variance.

(2) A discharger who cannot file a timely complete request required under paragraph (m)(2)(i)(B) or (m)(2)(ii) of this section may request an extension. The extension may be granted or denied at the discretion of the Director. Extensions shall be no more than 6 months in duration.

(p) *Recordkeeping.* Except for information required by paragraph (d)(3)(ii) of this section, which shall be retained for a period of at least five years from the date the application is signed (or longer as required by 40 CFR part 503), applicants shall keep records of all data used to complete permit applications and any supplemental information submitted under this section for a period of at least 3 years from the date the application is signed.

[Note 1: At 46 FR 2046, Jan. 8, 1981, the Environmental Protection Agency suspended until further notice § 122.21(g)(7)(ii)(A) and the corresponding portions of Item V–C of the NPDES application Form 2c as they apply to coal mines. This revision continues that suspension.][1]

[Note 2: At 46 FR 22585, Apr. 20, 1981, the Environmental Protection Agency suspended until further notice § 122.21(g)(7)(ii)(A) and the corresponding portions of Item V–C of the NPDES application Form 2c as they apply to:

a. Testing and reporting for all four organic fractions in the Greige Mills Subcategory of the Textile Mills industry (subpart C—Low water use processing of 40 CFR part 410), and testing and reporting for the pesticide fraction in all other subcategories of this industrial category.

b. Testing and reporting for the volatile, base/neutral and pesticide fractions in the Base and Precious Metals Subcategory of the Ore Mining and Dressing industry (subpart B of 40 CFR part 440), and testing and reporting for all four fractions in all other subcategories of this industrial category.

c. Testing and reporting for all four GC/MS fractions in the Porcelain Enameling industry.

This revision continues that suspension.][1]

[Note 3: At 46 FR 35090, July 1, 1981, the Environmental Protection Agency suspended until further notice § 122.21(g)(7)(ii)(A) and the corresponding portions of Item V–C of the NPDES application Form 2c as they apply to:

a. Testing and reporting for the pesticide fraction in the Tall Oil Rosin Subcategory (subpart D) and Rosin-Based Derivatives Subcategory (subpart F) of the Gum and Wood Chemicals industry (40 CFR part 454), and testing and reporting for the pesticide and base-neutral fractions in all other subcategories of this industrial category.

b. Testing and reporting for the pesticide fraction in the Leather Tanning and Finishing, Paint and Ink Formulation, and Photographic Supplies industrial categories.

c. Testing and reporting for the acid, base/neutral and pesticide fractions in the Petroleum Refining industrial category.

d. Testing and reporting for the pesticide fraction in the Papergrade Sulfite subcategories (subparts J and U) of the Pulp and Paper industry (40 CFR part 430); testing and reporting for the base/neutral and pesticide fractions in the following subcategories: Deink (subpart Q), Dissolving Kraft (subpart

[1] EDITORIAL NOTE: The words ''This revision'' refer to the document published at 48 FR 14153, Apr. 1, 1983.

F), and Paperboard from Waste Paper (subpart E); testing and reporting for the volatile, base/neutral and pesticide fractions in the following subcategories: BCT Bleached Kraft (subpart H), Semi-Chemical (subparts B and C), and Nonintegrated-Fine Papers (subpart R); and testing and reporting for the acid, base/neutral, and pesticide fractions in the following subcategories: Fine Bleached Kraft (subpart I), Dissolving Sulfite Pulp (subpart K), Groundwood-Fine Papers (subpart O), Market Bleached Kraft (subpart G), Tissue from Wastepaper (subpart T), and Nonintegrated-Tissue Papers (subpart S).

e. Testing and reporting for the base/neutral fraction in the Once-Through Cooling Water, Fly Ash and Bottom Ash Transport Water process wastestreams of the Steam Electric Power Plant industrial category.

This revision continues that suspension.][1]

[48 FR 14153, Apr. 1, 1983, as amended at 49 FR 31842, Aug. 8, 1984; 49 FR 38046, Sept. 26, 1984; 50 FR 6940, 6941, Feb. 19, 1985; 50 FR 35203, Aug. 29, 1985; 51 FR 26991, July 28, 1986; 53 FR 4158, Feb. 12, 1988; 53 FR 33007, Sept. 6, 1988; 54 FR 254, Jan. 4, 1989; 54 FR 18782, May 2, 1989; 55 FR 30128, July 24, 1990; 55 FR 48062, Nov. 16, 1990; 58 FR 9413, Feb. 19, 1993; 60 FR 17956, Apr. 7, 1995; 60 FR 33931, June 29, 1995; 60 FR 40235, Aug. 7, 1995]

§ 122.22 Signatories to permit applications and reports (applicable to State programs, see § 123.25).

(a) *Applications.* All permit applications shall be signed as follows:

(1) *For a corporation.* By a responsible corporate officer. For the purpose of this section, a responsible corporate officer means: (i) A president, secretary, treasurer, or vice-president of the corporation in charge of a principal business function, or any other person who perfoms similar policy- or decision-making functions for the corporation, or (ii) the manager of one or more manufacturing, production, or operating facilities employing more than 250 persons or having gross annual sales or expenditures exceeding $25 million (in second-quarter 1980 dollars), if authority to sign documents has been assigned or delegated to the manager in accordance with corporate procedures.

NOTE: EPA does not require specific assignments or delegations of authority to responsible corporate officers identified in § 122.22(a)(1)(i). The Agency will presume that these responsible corporate officers have the requisite authority to sign permit applications unless the corporation has notified the Director to the contrary. Corporate procedures governing authority to sign permit applications may provide for assignment or delegation to applicable corporate positions under § 122.22(a)(1)(ii) rather than to specific individuals.

(2) *For a partnership or sole proprietorship.* By a general partner or the proprietor, respectively; or

(3) *For a municipality, State, Federal, or other public agency.* By either a principal executive officer or ranking elected official. For purposes of this section, a principal executive officer of a Federal agency includes: (i) The chief executive officer of the agency, or (ii) a senior executive officer having responsibility for the overall operations of a principal geographic unit of the agency (e.g., Regional Administrators of EPA).

(b) All reports required by permits, and other information requested by the Director shall be signed by a person described in paragraph (a) of this section, or by a duly authorized representative of that person. A person is a duly authorized representative only if:

(1) The authorization is made in writing by a person described in paragraph (a) of this section;

(2) The authorization specifies either an individual or a position having responsibility for the overall operation of the regulated facility or activity such as the position of plant manager, operator of a well or a well field, superintendent, position of equivalent responsibility, or an individual or position having overall responsibility for environmental matters for the company, (A duly authorized representative may thus be either a named individual or any individual occupying a named position.) and,

(3) The written authorization is submitted to the Director.

(c) *Changes to authorization.* If an authorization under paragraph (b) of this section is no longer accurate because a different individual or position has responsibility for the overall operation of the facility, a new authorization satisfying the requirements of paragraph (b) of this section must be submitted to the Director prior to or together with

[1] EDITORIAL NOTE: The words ''This revision'' refer to the document published at 48 FR 14153, Apr. 1, 1983.

any reports, information, or applications to be signed by an authorized representative.

(d) *Certification.* Any person signing a document under paragraph (a) or (b) of this section shall make the following certification:

I certify under penalty of law that this document and all attachments were prepared under my direction or supervision in accordance with a system designed to assure that qualified personnel properly gather and evaluate the information submitted. Based on my inquiry of the person or persons who manage the system, or those persons directly responsible for gathering the information, the information submitted is, to the best of my knowledge and belief, true, accurate, and complete. I am aware that there are significant penalties for submitting false information, including the possibility of fine and imprisonment for knowing violations.

(Clean Water Act (33 U.S.C. 1251 *et seq.*), Safe Drinking Water Act (42 U.S.C. 300f *et seq.*), Clean Air Act (42 U.S.C. 7401 *et seq.*), Resource Conservation and Recovery Act (42 U.S.C. 6901 *et seq.*))

[48 FR 14153, Apr. 1, 1983, as amended at 48 FR 39619, Sept. 1, 1983; 49 FR 38047, Sept. 29, 1984; 50 FR 6941, Feb. 19, 1985; 55 FR 48063, Nov. 16, 1990]

§122.23 Concentrated animal feeding operations (applicable to State NPDES programs, see §123.25).

(a) *Permit requirement.* Concentrated animal feeding operations are point sources subject to the NPDES permit program.

(b) *Definitions.* (1) *Animal feeding operation* means a lot or facility (other than an aquatic animal production facility) where the following conditions are met:

(i) Animals (other than aquatic animals) have been, are, or will be stabled or confined and fed or maintained for a total of 45 days or more in any 12-month period, and

(ii) Crops, vegetation forage growth, or post-harvest residues are not sustained in the normal growing season over any portion of the lot or facility.

(2) Two or more animal feeding operations under common ownership are considered, for the purposes of these regulations, to be a single animal feeding operation if they adjoin each other or if they use a common area or system for the disposal of wastes.

(3) *Concentrated animal feeding operation* means an ''animal feeding operation'' which meets the criteria in appendix B of this part, or which the Director designates under paragraph (c) of this section.

(c) *Case-by-case designation of concentrated animal feeding operations.* (1) The Director may designate any animal feeding operation as a concentrated animal feeding operation upon determining that it is a significant contributor of pollution to the waters of the United States. In making this designation the Director shall consider the following factors:

(i) The size of the animal feeding operation and the amount of wastes reaching waters of the United States;

(ii) The location of the animal feeding operation relative to waters of the United States;

(iii) The means of conveyance of animal wastes and process waste waters into waters of the United States;

(iv) The slope, vegetation, rainfall, and other factors affecting the likelihood or frequency of discharge of animal wastes and process waste waters into waters of the United States; and

(v) Other relevant factors.

(2) No animal feeding operation with less than the numbers of animals set forth in appendix B of this part shall be designated as a concentrated animal feeding operation unless:

(i) Pollutants are discharged into waters of the United States through a manmade ditch, flushing system, or other similar manmade device; or

(ii) Pollutants are discharged directly into waters of the United States which originate outside of the facility and pass over, across, or through the facility or otherwise come into direct contact with the animals confined in the operation.

(3) A permit application shall not be required from a concentrated animal feeding operation designated under this paragraph until the Director has conducted an on-site inspection of the operation and determined that the operation should and could be regulated under the permit program.

§ 122.24 Concentrated aquatic animal production facilities (applicable to State NPDES programs, see § 123.25).

(a) *Permit requirement.* Concentrated aquatic animal production facilities, as defined in this section, are point sources subject to the NPDES permit program.

(b) *Defintion. Concentrated aquatic animal production facility* means a hatchery, fish farm, or other facility which meets the criteria in appendix C of this part, or which the Director designates under paragraph (c) of this section.

(c) *Case-by-case designation of concentrated aquatic animal production facilities.* (1) The Director may designate any warm or cold water aquatic animal production facility as a concentrated aquatic animal production facility upon determining that it is a significant contributor of pollution to waters of the United States. In making this designation the Director shall consider the following factors:

(i) The location and quality of the receiving waters of the United States;

(ii) The holding, feeding, and production capacities of the facility;

(iii) The quantity and nature of the pollutants reaching waters of the United States; and

(iv) Other relevant factors.

(2) A permit application shall not be required from a concentrated aquatic animal production facility designated under this paragraph until the Director has conducted on-site inspection of the facility and has determined that the facility should and could be regulated under the permit program.

§ 122.25 Aquaculture projects (applicable to State NPDES programs, see § 123.25).

(a) *Permit requirement.* Discharges into aquaculture projects, as defined in this section, are subject to the NPDES permit program through section 318 of CWA, and in accordance with 40 CFR part 125, subpart B.

(b) *Definitions.* (1) *Aquaculture project* means a defined managed water area which uses discharges of pollutants into that designated area for the maintenance or production of harvestable freshwater, estuarine, or marine plants or animals.

(2) *Designated project area* means the portions of the waters of the United States within which the permittee or permit applicant plans to confine the cultivated species, using a method or plan or operation (including, but not limited to, physical confinement) which, on the basis of reliable scientific evidence, is expected to ensure that specific individual organisms comprising an aquaculture crop will enjoy increased growth attributable to the discharge of pollutants, and be harvested within a defined geographic area.

§ 122.26 Storm water discharges (applicable to State NPDES programs, see § 123.25).

(a) *Permit requirement.* (1) Prior to October 1, 1994, discharges composed entirely of storm water shall not be required to obtain a NPDES permit except:

(i) A discharge with respect to which a permit has been issued prior to February 4, 1987;

(ii) A discharge associated with industrial activity (see § 122.26(a)(4));

(iii) A discharge from a large municipal separate storm sewer system;

(iv) A discharge from a medium municipal separate storm sewer system;

(v) A discharge which the Director, or in States with approved NPDES programs, either the Director or the EPA Regional Administrator, determines to contribute to a violation of a water quality standard or is a significant contributor of pollutants to waters of the United States. This designation may include a discharge from any conveyance or system of conveyances used for collecting and conveying storm water runoff or a system of discharges from municipal separate storm sewers, except for those discharges from conveyances which do not require a permit under paragraph (a)(2) of this section or agricultural storm water runoff which is exempted from the definition of point source at § 122.2.

The Director may designate discharges from municipal separate storm sewers on a system-wide or jurisdiction-wide basis. In making this determination

the Director may consider the following factors:

(A) The location of the discharge with respect to waters of the United States as defined at 40 CFR 122.2.

(B) The size of the discharge;

(C) The quantity and nature of the pollutants discharged to waters of the United States; and

(D) Other relevant factors.

(2) The Director may not require a permit for discharges of storm water runoff from mining operations or oil and gas exploration, production, processing or treatment operations or transmission facilities, composed entirely of flows which are from conveyances or systems of conveyances (including but not limited to pipes, conduits, ditches, and channels) used for collecting and conveying precipitation runoff and which are not contaminated by contact with or that has not come into contact with, any overburden, raw material, intermediate products, finished product, byproduct or waste products located on the site of such operations.

(3) *Large and medium municipal separate storm sewer systems.* (i) Permits must be obtained for all discharges from large and medium municipal separate storm sewer systems.

(ii) The Director may either issue one system-wide permit covering all discharges from municipal separate storm sewers within a large or medium municipal storm sewer system or issue distinct permits for appropriate categories of discharges within a large or medium municipal separate storm sewer system including, but not limited to: all discharges owned or operated by the same municipality; located within the same jurisdiction; all discharges within a system that discharge to the same watershed; discharges within a system that are similar in nature; or for individual discharges from municipal separate storm sewers within the system.

(iii) The operator of a discharge from a municipal separate storm sewer which is part of a large or medium municipal separate storm sewer system must either:

(A) Participate in a permit application (to be a permittee or a co-permittee) with one or more other operators of discharges from the large or medium municipal storm sewer system which covers all, or a portion of all, discharges from the municipal separate storm sewer system;

(B) Submit a distinct permit application which only covers discharges from the municipal separate storm sewers for which the operator is responsible; or

(C) A regional authority may be responsible for submitting a permit application under the following guidelines:

(*1*) The regional authority together with co-applicants shall have authority over a storm water management program that is in existence, or shall be in existence at the time part 1 of the application is due;

(*2*) The permit applicant or co-applicants shall establish their ability to make a timely submission of part 1 and part 2 of the municipal application;

(*3*) Each of the operators of municipal separate storm sewers within the systems described in paragraphs (b)(4) (i), (ii), and (iii) or (b)(7) (i), (ii), and (iii) of this section, that are under the purview of the designated regional authority, shall comply with the application requirements of paragraph (d) of this section.

(iv) One permit application may be submitted for all or a portion of all municipal separate storm sewers within adjacent or interconnected large or medium municipal separate storm sewer systems. The Director may issue one system-wide permit covering all, or a portion of all municipal separate storm sewers in adjacent or interconnected large or medium municipal separate storm sewer systems.

(v) Permits for all or a portion of all discharges from large or medium municipal separate storm sewer systems that are issued on a system-wide, jurisdiction-wide, watershed or other basis may specify different conditions relating to different discharges covered by the permit, including different management programs for different drainage areas which contribute storm water to the system.

(vi) Co-permittees need only comply with permit conditions relating to discharges from the municipal separate

storm sewers for which they are operators.

(4) *Discharges through large and medium municipal separate storm sewer systems.* In addition to meeting the requirements of paragraph (c) of this section, an operator of a storm water discharge associated with industrial activity which discharges through a large or medium municipal separate storm sewer system shall submit, to the operator of the municipal separate storm sewer system receiving the discharge no later than May 15, 1991, or 180 days prior to commencing such discharge: the name of the facility; a contact person and phone number; the location of the discharge; a description, including Standard Industrial Classification, which best reflects the principal products or services provided by each facility; and any existing NPDES permit number.

(5) *Other municipal separate storm sewers.* The Director may issue permits for municipal separate storm sewers that are designated under paragraph (a)(1)(v) of this section on a system-wide basis, jurisdiction-wide basis, watershed basis or other appropriate basis, or may issue permits for individual discharges.

(6) *Non-municipal separate storm sewers.* For storm water discharges associated with industrial activity from point sources which discharge through a non-municipal or non-publicly owned separate storm sewer system, the Director, in his discretion, may issue: a single NPDES permit, with each discharger a co-permittee to a permit issued to the operator of the portion of the system that discharges into waters of the United States; or, individual permits to each discharger of storm water associated with industrial activity through the non-municipal conveyance system.

(i) All storm water discharges associated with industrial activity that discharge through a storm water discharge system that is not a municipal separate storm sewer must be covered by an individual permit, or a permit issued to the operator of the portion of the system that discharges to waters of the United States, with each discharger to the non-municipal conveyance a co-permittee to that permit.

(ii) Where there is more than one operator of a single system of such conveyances, all operators of storm water discharges associated with industrial activity must submit applications.

(iii) Any permit covering more than one operator shall identify the effluent limitations, or other permit conditions, if any, that apply to each operator.

(7) *Combined sewer systems.* Conveyances that discharge storm water runoff combined with municipal sewage are point sources that must obtain NPDES permits in accordance with the procedures of § 122.21 and are not subject to the provisions of this section.

(8) Whether a discharge from a municipal separate storm sewer is or is not subject to regulation under this section shall have no bearing on whether the owner or operator of the discharge is eligible for funding under title II, title III or title VI of the Clean Water Act. *See* 40 CFR part 35, subpart I, appendix A(b)H.2.j.

(9) On and after October 1, 1994, dischargers composed entirely of storm water, that are not otherwise already required by paragraph (a)(1) of this section to obtain a permit, shall be required to apply for and obtain a permit according to the application requirements in paragraph (g) of this section. The Director may not require a permit for discharges of storm water as provided in paragraph (a)(2) of this section or agricultural storm water runoff which is exempted from the definition of point source at §§ 122.2 and 122.3.

(b) *Definitions.* (1) *Co-permittee* means a permittee to a NPDES permit that is only responsible for permit conditions relating to the discharge for which it is operator.

(2) *Illicit discharge* means any discharge to a municipal separate storm sewer that is not composed entirely of storm water except discharges pursuant to a NPDES permit (other than the NPDES permit for discharges from the municipal separate storm sewer) and discharges resulting from fire fighting activities.

(3) *Incorporated place* means the District of Columbia, or a city, town, township, or village that is incorporated under the laws of the State in which it is located.

(4) *Large municipal separate storm sewer system* means all municipal separate storm sewers that are either:

(i) Located in an incorporated place with a population of 250,000 or more as determined by the latest Decennial Census by the Bureau of Census (appendix F); or

(ii) Located in the counties listed in appendix H, except municipal separate storm sewers that are located in the incorporated places, townships or towns within such counties; or

(iii) Owned or operated by a municipality other than those described in paragraph (b)(4) (i) or (ii) of this section and that are designated by the Director as part of the large or medium municipal separate storm sewer system due to the interrelationship between the discharges of the designated storm sewer and the discharges from municipal separate storm sewers described under paragraph (b)(4) (i) or (ii) of this section. In making this determination the Director may consider the following factors:

(A) Physical interconnections between the municipal separate storm sewers;

(B) The location of discharges from the designated municipal separate storm sewer relative to discharges from municipal separate storm sewers described in paragraph (b)(4)(i) of this section;

(C) The quantity and nature of pollutants discharged to waters of the United States;

(D) The nature of the receiving waters; and

(E) Other relevant factors; or

(iv) The Director may, upon petition, designate as a large municipal separate storm sewer system, municipal separate storm sewers located within the boundaries of a region defined by a storm water management regional authority based on a jurisdictional, watershed, or other appropriate basis that includes one or more of the systems described in paragraph (b)(4) (i), (ii), (iii) of this section.

(5) *Major municipal separate storm sewer outfall* (or ''major outfall'') means a municipal separate storm sewer outfall that discharges from a single pipe with an inside diameter of 36 inches or more or its equivalent (discharge from a single conveyance other than circular pipe which is associated with a drainage area of more than 50 acres); or for municipal separate storm sewers that receive storm water from lands zoned for industrial activity (based on comprehensive zoning plans or the equivalent), an outfall that discharges from a single pipe with an inside diameter of 12 inches or more or from its equivalent (discharge from other than a circular pipe associated with a drainage area of 2 acres or more).

(6) *Major outfall* means a major municipal separate storm sewer outfall.

(7) *Medium municipal separate storm sewer system* means all municipal separate storm sewers that are either:

(i) Located in an incorporated place with a population of 100,000 or more but less than 250,000, as determined by the latest Decennial Census by the Bureau of Census (appendix G); or

(ii) Located in the counties listed in appendix I, except municipal separate storm sewers that are located in the incorporated places, townships or towns within such counties; or

(iii) Owned or operated by a municipality other than those described in paragraph (b)(4) (i) or (ii) of this section and that are designated by the Director as part of the large or medium municipal separate storm sewer system due to the interrelationship between the discharges of the designated storm sewer and the discharges from municipal separate storm sewers described under paragraph (b)(4) (i) or (ii) of this section. In making this determination the Director may consider the following factors:

(A) Physical interconnections between the municipal separate storm sewers;

(B) The location of discharges from the designated municipal separate storm sewer relative to discharges from municipal separate storm sewers described in paragraph (b)(7)(i) of this section;

(C) The quantity and nature of pollutants discharged to waters of the United States;

(D) The nature of the receiving waters; or

(E) Other relevant factors; or

(iv) The Director may, upon petition, designate as a medium municipal separate storm sewer system, municipal separate storm sewers located within the boundaries of a region defined by a storm water management regional authority based on a jurisdictional, watershed, or other appropriate basis that includes one or more of the systems described in paragraphs (b)(7) (i), (ii), (iii) of this section.

(8) *Municipal separate storm sewer* means a conveyance or system of conveyances (including roads with drainage systems, municipal streets, catch basins, curbs, gutters, ditches, man-made channels, or storm drains):

(i) Owned or operated by a State, city, town, borough, county, parish, district, association, or other public body (created by or pursuant to State law) having jurisdiction over disposal of sewage, industrial wastes, storm water, or other wastes, including special districts under State law such as a sewer district, flood control district or drainage district, or similar entity, or an Indian tribe or an authorized Indian tribal organization, or a designated and approved management agency under section 208 of the CWA that discharges to waters of the United States;

(ii) Designed or used for collecting or conveying storm water;

(iii) Which is not a combined sewer; and

(iv) Which is not part of a Publicly Owned Treatment Works (POTW) as defined at 40 CFR 122.2.

(9) *Outfall* means a *point source* as defined by 40 CFR 122.2 at the point where a municipal separate storm sewer discharges to waters of the United States and does not include open conveyances connecting two municipal separate storm sewers, or pipes, tunnels or other conveyances which connect segments of the same stream or other waters of the United States and are used to convey waters of the United States.

(10) *Overburden* means any material of any nature, consolidated or unconsolidated, that overlies a mineral deposit, excluding topsoil or similar naturally-occurring surface materials that are not disturbed by mining operations.

(11) *Runoff coefficient* means the fraction of total rainfall that will appear at a conveyance as runoff.

(12) *Significant materials* includes, but is not limited to: raw materials; fuels; materials such as solvents, detergents, and plastic pellets; finished materials such as metallic products; raw materials used in food processing or production; hazardous substances designated under section 101(14) of CERCLA; any chemical the facility is required to report pursuant to section 313 of title III of SARA; fertilizers; pesticides; and waste products such as ashes, slag and sludge that have the potential to be released with storm water discharges.

(13) *Storm water* means storm water runoff, snow melt runoff, and surface runoff and drainage.

(14) *Storm water discharge associated with industrial activity* means the discharge from any conveyance which is used for collecting and conveying storm water and which is directly related to manufacturing, processing or raw materials storage areas at an industrial plant. The term does not include discharges from facilities or activities excluded from the NPDES program under 40 CFR part 122. For the categories of industries identified in paragraphs (b)(14) (i) through (x) of this section, the term includes, but is not limited to, storm water discharges from industrial plant yards; immediate access roads and rail lines used or traveled by carriers of raw materials, manufactured products, waste material, or by-products used or created by the facility; material handling sites; refuse sites; sites used for the application or disposal of process waste waters (as defined at 40 CFR part 401); sites used for the storage and maintenance of material handling equipment; sites used for residual treatment, storage, or disposal; shipping and receiving areas; manufacturing buildings; storage areas (including tank farms) for raw materials, and intermediate and finished products; and areas where industrial activity has taken place in the past and significant materials remain and are exposed to storm water. For the categories of industries identified in paragraph (b)(14)(xi) of this section, the

term includes only storm water discharges from all the areas (except access roads and rail lines) that are listed in the previous sentence where material handling equipment or activities, raw materials, intermediate products, final products, waste materials, by-products, or industrial machinery are exposed to storm water. For the purposes of this paragraph, material handling activities include the storage, loading and unloading, transportation, or conveyance of any raw material, intermediate product, finished product, by-product or waste product. The term excludes areas located on plant lands separate from the plant's industrial activities, such as office buildings and accompanying parking lots as long as the drainage from the excluded areas is not mixed with storm water drained from the above described areas. Industrial facilities (including industrial facilities that are Federally, State, or municipally owned or operated that meet the description of the facilities listed in this paragraph (b)(14)(i)–(xi) of this section) include those facilities designated under the provisions of paragraph (a)(1)(v) of this section. The following categories of facilities are considered to be engaging in ''industrial activity'' for purposes of this subsection:

(i) Facilities subject to storm water effluent limitations guidelines, new source performance standards, or toxic pollutant effluent standards under 40 CFR subchapter N (except facilities with toxic pollutant effluent standards which are exempted under category (xi) in paragraph (b)(14) of this section);

(ii) Facilities classified as Standard Industrial Classifications 24 (except 2434), 26 (except 265 and 267), 28 (except 283), 29, 31l, 32 (except 323), 33, 344l, 373;

(iii) Facilities classified as Standard Industrial Classifications 10 through 14 (mineral industry) including active or inactive mining operations (except for areas of coal mining operations no longer meeting the definition of a reclamation area under 40 CFR 434.11(1) because the performance bond issued to the facility by the appropriate SMCRA authority has been released, or except for areas of non-coal mining operations which have been released from applicable State or Federal reclamation requirements after December 17, 1990) and oil and gas exploration, production, processing, or treatment operations, or transmission facilities that discharge storm water contaminated by contact with or that has come into contact with, any overburden, raw material, intermediate products, finished products, byproducts or waste products located on the site of such operations; (inactive mining operations are mining sites that are not being actively mined, but which have an identifiable owner/operator; inactive mining sites do not include sites where mining claims are being maintained prior to disturbances associated with the extraction, beneficiation, or processing of mined materials, nor sites where minimal activities are undertaken for the sole purpose of maintaining a mining claim);

(iv) Hazardous waste treatment, storage, or disposal facilities, including those that are operating under interim status or a permit under subtitle C of RCRA;

(v) Landfills, land application sites, and open dumps that receive or have received any industrial wastes (waste that is received from any of the facilities described under this subsection) including those that are subject to regulation under subtitle D of RCRA;

(vi) Facilities involved in the recycling of materials, including metal scrapyards, battery reclaimers, salvage yards, and automobile junkyards, including but limited to those classified as Standard Industrial Classification 5015 and 5093;

(vii) Steam electric power generating facilities, including coal handling sites;

(viii) Transportation facilities classified as Standard Industrial Classifications 40, 41, 42 (except 4221–25), 43, 44, 45, and 5171 which have vehicle maintenance shops, equipment cleaning operations, or airport deicing operations. Only those portions of the facility that are either involved in vehicle maintenance (including vehicle rehabilitation, mechanical repairs, painting, fueling, and lubrication), equipment cleaning operations, airport deicing operations, or which are otherwise identified under paragraphs (b)(14) (i)–(vii) or (ix)–(xi) of this section are associated with industrial activity;

(ix) Treatment works treating domestic sewage or any other sewage sludge or wastewater treatment device or system, used in the storage treatment, recycling, and reclamation of municipal or domestic sewage, including land dedicated to the disposal of sewage sludge that are located within the confines of the facility, with a design flow of 1.0 mgd or more, or required to have an approved pretreatment program under 40 CFR part 403. Not included are farm lands, domestic gardens or lands used for sludge management where sludge is beneficially reused and which are not physically located in the confines of the facility, or areas that are in compliance with section 405 of the CWA;

(x) Construction activity including clearing, grading and excavation activities except: operations that result in the disturbance of less than five acres of total land area which are not part of a larger common plan of development or sale;

(xi) Facilities under Standard Industrial Classifications 20, 21, 22, 23, 2434, 25, 265, 267, 27, 283, 285, 30, 31 (except 311), 323, 34 (except 3441), 35, 36, 37 (except 373), 38, 39, 4221–25, (and which are not otherwise included within categories (ii)–(x));

(15) *Uncontrolled sanitary landfill* means a landill or open dump, whether in operation or closed, that does not meet the requirements for runon or runoff controls established pursuant to subtitle D of the Solid Waste Disposal Act.

(c) *Application requirements for storm water discharges associated with industrial activity*—(1) *Individual application.* Dischargers of storm water associated with industrial activity are required to apply for an individual permit, apply for a permit through a group application, or seek coverage under a promulgated storm water general permit. Facilities that are required to obtain an individual permit, or any discharge of storm water which the Director is evaluating for designation (*see* 40 CFR 124.52(c)) under paragraph (a)(1)(v) of this section and is not a municipal separate storm sewer, and which is not part of a group application described under paragraph (c)(2) of this section, shall submit an NPDES application in accordance with the requirements of § 122.21 as modified and supplemented by the provisions of the remainder of this paragraph. Applicants for discharges composed entirely of storm water shall submit Form 1 and Form 2F. Applicants for discharges composed of storm water and non-storm water shall submit Form 1, Form 2C, and Form 2F. Applicants for new sources or new discharges (as defined in § 122.2 of this part) composed of storm water and non-storm water shall submit Form 1, Form 2D, and Form 2F.

(i) Except as provided in § 122.26(c)(1)(ii)–(iv), the operator of a storm water discharge associated with industrial activity subject to this section shall provide:

(A) A site map showing topography (or indicating the outline of drainage areas served by the outfall(s) covered in the application if a topographic map is unavailable) of the facility including: each of its drainage and discharge structures; the drainage area of each storm water outfall; paved areas and buildings within the drainage area of each storm water outfall, each past or present area used for outdoor storage or disposal of significant materials, each existing structural control measure to reduce pollutants in storm water runoff, materials loading and access areas, areas where pesticides, herbicides, soil conditioners and fertilizers are applied, each of its hazardous waste treatment, storage or disposal facilities (including each area not required to have a RCRA permit which is used for accumulating hazardous waste under 40 CFR 262.34); each well where fluids from the facility are injected underground; springs, and other surface water bodies which receive storm water discharges from the facility;

(B) An estimate of the area of impervious surfaces (including paved areas and building roofs) and the total area drained by each outfall (within a mile radius of the facility) and a narrative description of the following: Significant materials that in the three years prior to the submittal of this application have been treated, stored or disposed in a manner to allow exposure to storm water; method of treatment, storage or disposal of such materials;

materials management practices employed, in the three years prior to the submittal of this application, to minimize contact by these materials with storm water runoff; materials loading and access areas; the location, manner and frequency in which pesticides, herbicides, soil conditioners and fertilizers are applied; the location and a description of existing structural and nonstructural control measures to reduce pollutants in storm water runoff; and a description of the treatment the storm water receives, including the ultimate disposal of any solid or fluid wastes other than by discharge;

(C) A certification that all outfalls that should contain storm water discharges associated with industrial activity have been tested or evaluated for the presence of non-storm water discharges which are not covered by a NPDES permit; tests for such non-storm water discharges may include smoke tests, fluorometric dye tests, analysis of accurate schematics, as well as other appropriate tests. The certification shall include a description of the method used, the date of any testing, and the on-site drainage points that were directly observed during a test;

(D) Existing information regarding significant leaks or spills of toxic or hazardous pollutants at the facility that have taken place within the three years prior to the submittal of this application;

(E) Quantitative data based on samples collected during storm events and collected in accordance with § 122.21 of this part from all outfalls containing a storm water discharge associated with industrial activity for the following parameters:

(*1*) Any pollutant limited in an effluent guideline to which the facility is subject;

(*2*) Any pollutant listed in the facility's NPDES permit for its process wastewater (if the facility is operating under an existing NPDES permit);

(*3*) Oil and grease, pH, BOD5, COD, TSS, total phosphorus, total Kjeldahl nitrogen, and nitrate plus nitrite nitrogen;

(*4*) Any information on the discharge required under paragraph § 122.21(g)(7)(iii) and (iv) of this part;

(*5*) Flow measurements or estimates of the flow rate, and the total amount of discharge for the storm event(s) sampled, and the method of flow measurement or estimation; and

(*6*) The date and duration (in hours) of the storm event(s) sampled, rainfall measurements or estimates of the storm event (in inches) which generated the sampled runoff and the duration between the storm event sampled and the end of the previous measurable (greater than 0.1 inch rainfall) storm event (in hours);

(F) Operators of a discharge which is composed entirely of storm water are exempt from the requirements of § 122.21 (g)(2), (g)(3), (g)(4), (g)(5), (g)(7)(i), (g)(7)(ii), and (g)(7)(v); and

(G) Operators of new sources or new discharges (as defined in § 122.2 of this part) which are composed in part or entirely of storm water must include estimates for the pollutants or parameters listed in paragraph (c)(1)(i)(E) of this section instead of actual sampling data, along with the source of each estimate. Operators of new sources or new discharges composed in part or entirely of storm water must provide quantitative data for the parameters listed in paragraph (c)(1)(i)(E) of this section within two years after commencement of discharge, unless such data has already been reported under the monitoring requirements of the NPDES permit for the discharge. Operators of a new source or new discharge which is composed entirely of storm water are exempt from the requirements of § 122.21 (k)(3)(ii), (k)(3)(iii), and (k)(5).

(ii) The operator of an existing or new storm water discharge that is associated with industrial activity solely under paragraph (b)(14)(x) of this section, is exempt from the requirements of § 122.21(g) and paragraph (c)(1)(i) of this section. Such operator shall provide a narrative description of:

(A) The location (including a map) and the nature of the construction activity;

(B) The total area of the site and the area of the site that is expected to undergo excavation during the life of the permit;

(C) Proposed measures, including best management practices, to control

pollutants in storm water discharges during construction, including a brief description of applicable State and local erosion and sediment control requirements;

(D) Proposed measures to control pollutants in storm water discharges that will occur after construction operations have been completed, including a brief description of applicable State or local erosion and sediment control requirements;

(E) An estimate of the runoff coefficient of the site and the increase in impervious area after the construction addressed in the permit application is completed, the nature of fill material and existing data describing the soil or the quality of the discharge; and

(F) The name of the receiving water.

(iii) The operator of an existing or new discharge composed entirely of storm water from an oil or gas exploration, production, processing, or treatment operation, or transmission facility is not required to submit a permit application in accordance with paragraph (c)(1)(i) of this section, unless the facility:

(A) Has had a discharge of storm water resulting in the discharge of a reportable quantity for which notification is or was required pursuant to 40 CFR 117.21 or 40 CFR 302.6 at anytime since November 16, 1987; or

(B) Has had a discharge of storm water resulting in the discharge of a reportable quantity for which notification is or was required pursuant to 40 CFR 110.6 at any time since November 16, 1987; or

(C) Contributes to a violation of a water quality standard.

(iv) The operator of an existing or new discharge composed entirely of storm water from a mining operation is not required to submit a permit application unless the discharge has come into contact with, any overburden, raw material, intermediate products, finished product, byproduct or waste products located on the site of such operations.

(v) Applicants shall provide such other information the Director may reasonably require under § 122.21(g)(13) of this part to determine whether to issue a permit and may require any facility subject to paragraph (c)(1)(ii) of this section to comply with paragraph (c)(1)(i) of this section.

(2) *Group application for discharges associated with industrial activity.* In lieu of individual applications or notice of intent to be covered by a general permit for storm water discharges associated with industrial activity, a group application may be filed by an entity representing a group of applicants (except facilities that have existing individual NPDES permits for storm water) that are part of the same subcategory (*see* 40 CFR subchapter N, part 405 to 471) or, where such grouping is inapplicable, are sufficiently similar as to be appropriate for general permit coverage under § 122.28 of this part. The part 1 application shall be submitted to the Office of Water Enforcement and Permits, U.S. EPA, 401 M Street, SW., Washington, DC 20460 (EN–336) for approval. Once a part 1 application is approved, group applicants are to submit Part 2 of the group application to the Office of Water Enforcement and Permits. A group application shall consist of:

(i) *Part 1.* Part 1 of a group application shall:

(A) Identify the participants in the group application by name and location. Facilities participating in the group application shall be listed in nine subdivisions, based on the facility location relative to the nine precipitation zones indicated in appendix E to this part.

(B) Include a narrative description summarizing the industrial activities of participants of the group application and explaining why the participants, as a whole, are sufficiently similar to be a covered by a general permit;

(C) Include a list of significant materials stored exposed to precipitation by participants in the group application and materials management practices employed to diminish contact by these materials with precipitation and storm water runoff;

(D) For groups of more than 1,000 members, identify at least 100 dischargers participating in the group application from which quantitative data will be submitted. For groups of 100 or more members, identify a minimum of ten percent of the dischargers participating in the group application from

which quantitative data will be submitted. For groups of between 21 and 99 members identify a minimum of ten dischargers participating in the group application from which quantitative data will be submitted. For groups of 4 to 20 members, identify a minimum of 50 percent of the dischargers participating in the group application from which quantitative data will be submitted. For groups with more than 10 members, either a minimum of two dischargers from each precipitation zone indicated in appendix E of this part in which ten or more members of the group are located, or one discharger from each precipitation zone indicated in appendix E of this part in which nine or fewer members of the group are located, must be identified to submit quantitative data. For groups of 4 to 10 members, at least one facility in each precipitation zone indicated in appendix E of this part in which members of the group are located must be identifed to submit quantitative data. A description of why the facilities selected to perform sampling and analysis are representative of the group as a whole in terms of the information provided in paragraphs (c)(1)(i)(B) and (c)(1)(i)(C) of this section, shall accompany this section. Different factors impacting the nature of the storm water discharges, such as the processes used and material management, shall be represented, to the extent feasible, in a manner roughly equivalent to their proportion in the group.

(ii) *Part 2.* Part 2 of a group application shall contain quantitative data (NPDES Form 2F), as modified by paragraph (c)(1) of this section, so that when part 1 and part 2 of the group application are taken together, a complete NPDES application (Form 1, Form 2C, and Form 2F) can be evaluated for each discharger identified in paragraph (c)(2)(i)(D) of this section.

(d) *Application requirements for large and medium municipal separate storm sewer discharges.* The operator of a discharge from a large or medium municipal separate storm sewer or a municipal separate storm sewer that is designated by the Director under paragraph (a)(1)(v) of this section, may submit a jurisdiction-wide or system-wide permit application. Where more than one public entity owns or operates a municipal separate storm sewer within a geographic area (including adjacent or interconnected municipal separate storm sewer systems), such operators may be a coapplicant to the same application. Permit applications for discharges from large and medium municipal storm sewers or municipal storm sewers designated under paragraph (a)(1)(v) of this section shall include;

(1) *Part 1.* Part 1 of the application shall consist of;

(i) *General information.* The applicants' name, address, telephone number of contact person, ownership status and status as a State or local government entity.

(ii) *Legal authority.* A description of existing legal authority to control discharges to the municipal separate storm sewer system. When existing legal authority is not sufficient to meet the criteria provided in paragraph (d)(2)(i) of this section, the description shall list additional authorities as will be necessary to meet the criteria and shall include a schedule and commitment to seek such additional authority that will be needed to meet the criteria.

(iii) *Source identification.* (A) A description of the historic use of ordinances, guidance or other controls which limited the discharge of non-storm water discharges to any Publicly Owned Treatment Works serving the same area as the municipal separate storm sewer system.

(B) A USGS 7.5 minute topographic map (or equivalent topographic map with a scale between 1:10,000 and 1:24,000 if cost effective) extending one mile beyond the service boundaries of the municipal storm sewer system covered by the permit application. The following information shall be provided:

(*1*) The location of known municipal storm sewer system outfalls discharging to waters of the United States;

(*2*) A description of the land use activities (e.g. divisions indicating undeveloped, residential, commercial, agricultural and industrial uses) accompanied with estimates of population densities and projected growth for a ten year period within the drainage area served by the separate storm

sewer. For each land use type, an estimate of an average runoff coefficient shall be provided;

(*3*) The location and a description of the activities of the facility of each currently operating or closed municipal landfill or other treatment, storage or disposal facility for municipal waste;

(*4*) The location and the permit number of any known discharge to the municipal storm sewer that has been issued a NPDES permit;

(*5*) The location of major structural controls for storm water discharge (retention basins, detention basins, major infiltration devices, etc.); and

(*6*) The identification of publicly owned parks, recreational areas, and other open lands.

(iv) *Discharge characterization.* (A) Monthly mean rain and snow fall estimates (or summary of weather bureau data) and the monthly average number of storm events.

(B) Existing quantitative data describing the volume and quality of discharges from the municipal storm sewer, including a description of the outfalls sampled, sampling procedures and analytical methods used.

(C) A list of water bodies that receive discharges from the municipal separate storm sewer system, including downstream segments, lakes and estuaries, where pollutants from the system discharges may accumulate and cause water degradation and a brief description of known water quality impacts. At a minimum, the description of impacts shall include a description of whether the water bodies receiving such discharges have been:

(*1*) Assessed and reported in section 305(b) reports submitted by the State, the basis for the assessment (evaluated or monitored), a summary of designated use support and attainment of Clean Water Act (CWA) goals (fishable and swimmable waters), and causes of nonsupport of designated uses;

(*2*) Listed under section 304(l)(1)(A)(i), section 304(l)(1)(A)(ii), or section 304(l)(1)(B) of the CWA that is not expected to meet water quality standards or water quality goals;

(*3*) Listed in State Nonpoint Source Assessments required by section 319(a) of the CWA that, without additional action to control nonpoint sources of pollution, cannot reasonably be expected to attain or maintain water quality standards due to storm sewers, construction, highway maintenance and runoff from municipal landfills and municipal sludge adding significant pollution (or contributing to a violation of water quality standards);

(*4*) Identified and classified according to eutrophic condition of publicly owned lakes listed in State reports required under section 314(a) of the CWA (include the following: A description of those publicly owned lakes for which uses are known to be impaired; a description of procedures, processes and methods to control the discharge of pollutants from municipal separate storm sewers into such lakes; and a description of methods and procedures to restore the quality of such lakes);

(*5*) Areas of concern of the Great Lakes identified by the International Joint Commission;

(*6*) Designated estuaries under the National Estuary Program under section 320 of the CWA;

(*7*) Recognized by the applicant as highly valued or sensitive waters;

(*8*) Defined by the State or U.S. Fish and Wildlife Services's National Wetlands Inventory as wetlands; and

(*9*) Found to have pollutants in bottom sediments, fish tissue or biosurvey data.

(D) *Field screening.* Results of a field screening analysis for illicit connections and illegal dumping for either selected field screening points or major outfalls covered in the permit application. At a minimum, a screening analysis shall include a narrative description, for either each field screening point or major outfall, of visual observations made during dry weather periods. If any flow is observed, two grab samples shall be collected during a 24 hour period with a minimum period of four hours between samples. For all such samples, a narrative description of the color, odor, turbidity, the presence of an oil sheen or surface scum as well as any other relevant observations regarding the potential presence of non-storm water discharges or illegal dumping shall be provided. In addition, a narrative description of the results of a field analysis using suitable methods

to estimate pH, total chlorine, total copper, total phenol, and detergents (or surfactants) shall be provided along with a description of the flow rate. Where the field analysis does not involve analytical methods approved under 40 CFR part 136, the applicant shall provide a description of the method used including the name of the manufacturer of the test method along with the range and accuracy of the test. Field screening points shall be either major outfalls or other outfall points (or any other point of access such as manholes) randomly located throughout the storm sewer system by placing a grid over a drainage system map and identifying those cells of the grid which contain a segment of the storm sewer system or major outfall. The field screening points shall be established using the following guidelines and criteria:

(*1*) A grid system consisting of perpendicular north-south and east-west lines spaced ¼ mile apart shall be overlayed on a map of the municipal storm sewer system, creating a series of cells;

(*2*) All cells that contain a segment of the storm sewer system shall be identified; one field screening point shall be selected in each cell; major outfalls may be used as field screening points;

(*3*) Field screening points should be located downstream of any sources of suspected illegal or illicit activity;

(*4*) Field screening points shall be located to the degree practicable at the farthest manhole or other accessible location downstream in the system, within each cell; however, safety of personnel and accessibility of the location should be considered in making this determination;

(*5*) Hydrological conditions; total drainage area of the site; population density of the site; traffic density; age of the structures or buildings in the area; history of the area; and land use types;

(*6*) For medium municipal separate storm sewer systems, no more than 250 cells need to have identified field screening points; in large municipal separate storm sewer systems, no more than 500 cells need to have identified field screening points; cells established by the grid that contain no storm sewer segments will be eliminated from consideration; if fewer than 250 cells in medium municipal sewers are created, and fewer than 500 in large systems are created by the overlay on the municipal sewer map, then all those cells which contain a segment of the sewer system shall be subject to field screening (unless access to the separate storm sewer system is impossible); and

(*7*) Large or medium municipal separate storm sewer systems which are unable to utilize the procedures described in paragraphs (d)(1)(iv)(D) (*1*) through (*6*) of this section, because a sufficiently detailed map of the separate storm sewer systems is unavailable, shall field screen no more than 500 or 250 major outfalls respectively (or all major outfalls in the system, if less); in such circumstances, the applicant shall establish a grid system consisting of north-south and east-west lines spaced ¼ mile apart as an overlay to the boundaries of the municipal storm sewer system, thereby creating a series of cells; the applicant will then select major outfalls in as many cells as possible until at least 500 major outfalls (large municipalities) or 250 major outfalls (medium municipalities) are selected; a field screening analysis shall be undertaken at these major outfalls.

(E) *Characterization plan.* Information and a proposed program to meet the requirements of paragraph (d)(2)(iii) of this section. Such description shall include: the location of outfalls or field screening points appropriate for representative data collection under paragraph (d)(2)(iii)(A) of this section, a description of why the outfall or field screening point is representative, the seasons during which sampling is intended, a description of the sampling equipment. The proposed location of outfalls or field screening points for such sampling should reflect water quality concerns (*see* paragraph (d)(1)(iv)(C) of this section) to the extent practicable.

(v) *Management programs.* (A) A description of the existing management programs to control pollutants from the municipal separate storm sewer system. The description shall provide information on existing structural and source controls, including operation

and maintenance measures for structural controls, that are currently being implemented. Such controls may include, but are not limited to: Procedures to control pollution resulting from construction activities; floodplain management controls; wetland protection measures; best management practices for new subdivisions; and emergency spill response programs. The description may address controls established under State law as well as local requirements.

(B) A description of the existing program to identify illicit connections to the municipal storm sewer system. The description should include inspection procedures and methods for detecting and preventing illicit discharges, and describe areas where this program has been implemented.

(vi) *Fiscal resources.* (A) A description of the financial resources currently available to the municipality to complete part 2 of the permit application. A description of the municipality's budget for existing storm water programs, including an overview of the municipality's financial resources and budget, including overall indebtedness and assets, and sources of funds for storm water programs.

(2) *Part 2.* Part 2 of the application shall consist of:

(i) *Adequate legal authority.* A demonstration that the applicant can operate pursuant to legal authority established by statute, ordinance or series of contracts which authorizes or enables the applicant at a minimum to:

(A) Control through ordinance, permit, contract, order or similar means, the contribution of pollutants to the municipal storm sewer by storm water discharges associated with industrial activity and the quality of storm water discharged from sites of industrial activity;

(B) Prohibit through ordinance, order or similar means, illicit discharges to the municipal separate storm sewer;

(C) Control through ordinance, order or similar means the discharge to a municipal separate storm sewer of spills, dumping or disposal of materials other than storm water;

(D) Control through interagency agreements among coapplicants the contribution of pollutants from one portion of the municipal system to another portion of the municipal system;

(E) Require compliance with conditions in ordinances, permits, contracts or orders; and

(F) Carry out all inspection, surveillance and monitoring procedures necessary to determine compliance and noncompliance with permit conditions including the prohibition on illicit discharges to the municipal separate storm sewer.

(ii) *Source identification.* The location of any major outfall that discharges to waters of the United States that was not reported under paragraph (d)(1)(iii)(B)(*1*) of this section. Provide an inventory, organized by watershed of the name and address, and a description (such as SIC codes) which best reflects the principal products or services provided by each facility which may discharge, to the municipal separate storm sewer, storm water associated with industrial activity;

(iii) *Characterization data.* When ''quantitative data'' for a pollutant are required under paragraph (d)(a)(iii)(A)(*3*) of this paragraph, the applicant must collect a sample of effluent in accordance with 40 CFR 122.21(g)(7) and analyze it for the pollutant in accordance with analytical methods approved under 40 CFR part 136. When no analytical method is approved the applicant may use any suitable method but must provide a description of the method. The applicant must provide information characterizing the quality and quantity of discharges covered in the permit application, including:

(A) Quantitative data from representative outfalls designated by the Director (based on information received in part 1 of the application, the Director shall designate between five and ten outfalls or field screening points as representative of the commercial, residential and industrial land use activities of the drainage area contributing to the system or, where there are less than five outfalls covered in the application, the Director shall designate all outfalls) developed as follows:

(*1*) For each outfall or field screening point designated under this subparagraph, samples shall be collected of storm water discharges from three

storm events occurring at least one month apart in accordance with the requirements at § 122.21(g)(7) (the Director may allow exemptions to sampling three storm events when climatic conditions create good cause for such exemptions);

(*2*) A narrative description shall be provided of the date and duration of the storm event(s) sampled, rainfall estimates of the storm event which generated the sampled discharge and the duration between the storm event sampled and the end of the previous measurable (greater than 0.1 inch rainfall) storm event;

(*3*) For samples collected and described under paragraphs (d)(2)(iii)(A)(*1*) and (A)(*2*) of this section, quantitative data shall be provided for: the organic pollutants listed in Table II; the pollutants listed in Table III (toxic metals, cyanide, and total phenols) of appendix D of 40 CFR part 122, and for the following pollutants:

Total suspended solids (TSS)
Total dissolved solids (TDS)
COD
BOD_5
Oil and grease
Fecal coliform
Fecal streptococcus
pH
Total Kjeldahl nitrogen
Nitrate plus nitrite
Dissolved phosphorus
Total ammonia plus organic nitrogen
Total phosphorus

(*4*) Additional limited quantitative data required by the Director for determining permit conditions (the Director may require that quantitative data shall be provided for additional parameters, and may establish sampling conditions such as the location, season of sample collection, form of precipitation (snow melt, rainfall) and other parameters necessary to insure representativeness);

(B) Estimates of the annual pollutant load of the cumulative discharges to waters of the United States from all identified municipal outfalls and the event mean concentration of the cumulative discharges to waters of the United States from all identified municipal outfalls during a storm event (as described under § 122.21(c)(7)) for BOD_5, COD, TSS, dissolved solids, total nitrogen, total ammonia plus organic nitrogen, total phosphorus, dissolved phosphorus, cadmium, copper, lead, and zinc. Estimates shall be accompanied by a description of the procedures for estimating constituent loads and concentrations, including any modelling, data analysis, and calculation methods;

(C) A proposed schedule to provide estimates for each major outfall identified in either paragraph (d)(2)(ii) or (d)(1)(iii)(B)(*1*) of this section of the seasonal pollutant load and of the event mean concentration of a representative storm for any constituent detected in any sample required under paragraph (d)(2)(iii)(A) of this section; and

(D) A proposed monitoring program for representative data collection for the term of the permit that describes the location of outfalls or field screening points to be sampled (or the location of instream stations), why the location is representative, the frequency of sampling, parameters to be sampled, and a description of sampling equipment.

(iv) *Proposed management program.* A proposed management program covers the duration of the permit. It shall include a comprehensive planning process which involves public participation and where necessary intergovernmental coordination, to reduce the discharge of pollutants to the maximum extent practicable using management practices, control techniques and system, design and engineering methods, and such other provisions which are appropriate. The program shall also include a description of staff and equipment available to implement the program. Separate proposed programs may be submitted by each coapplicant. Proposed programs may impose controls on a systemwide basis, a watershed basis, a jurisdiction basis, or on individual outfalls. Proposed programs will be considered by the Director when developing permit conditions to reduce pollutants in discharges to the maximum extent practicable. Proposed management programs shall describe priorities for implementing controls. Such programs shall be based on:

(A) A description of structural and source control measures to reduce pollutants from runoff from commercial

and residential areas that are discharged from the municipal storm sewer system that are to be implemented during the life of the permit, accompanied with an estimate of the expected reduction of pollutant loads and a proposed schedule for implementing such controls. At a minimum, the description shall include:

(*1*) A description of maintenance activities and a maintenance schedule for structural controls to reduce pollutants (including floatables) in discharges from municipal separate storm sewers;

(*2*) A description of planning procedures including a comprehensive master plan to develop, implement and enforce controls to reduce the discharge of pollutants from municipal separate storm sewers which receive discharges from areas of new development and significant redevelopment. Such plan shall address controls to reduce pollutants in discharges from municipal separate storm sewers after construction is completed. (Controls to reduce pollutants in discharges from municipal separate storm sewers containing construction site runoff are addressed in paragraph (d)(2)(iv)(D) of this section;

(*3*) A description of practices for operating and maintaining public streets, roads and highways and procedures for reducing the impact on receiving waters of discharges from municipal storm sewer systems, including pollutants discharged as a result of deicing activities;

(*4*) A description of procedures to assure that flood management projects assess the impacts on the water quality of receiving water bodies and that existing structural flood control devices have been evaluated to determine if retrofitting the device to provide additional pollutant removal from storm water is feasible;

(*5*) A description of a program to monitor pollutants in runoff from operating or closed municipal landfills or other treatment, storage or disposal facilities for municipal waste, which shall identify priorities and procedures for inspections and establishing and implementing control measures for such discharges (this program can be coordinated with the program developed under paragraph (d)(2)(iv)(C) of this section); and

(*6*) A description of a program to reduce to the maximum extent practicable, pollutants in discharges from municipal separate storm sewers associated with the application of pesticides, herbicides and fertilizer which will include, as appropriate, controls such as educational activities, permits, certifications and other measures for commercial applicators and distributors, and controls for application in public right-of-ways and at municipal facilities.

(B) A description of a program, including a schedule, to detect and remove (or require the discharger to the municipal separate storm sewer to obtain a separate NPDES permit for) illicit discharges and improper disposal into the storm sewer. The proposed program shall include:

(*1*) A description of a program, including inspections, to implement and enforce an ordinance, orders or similar means to prevent illicit discharges to the municipal separate storm sewer system; this program description shall address all types of illicit discharges, however the following category of non-storm water discharges or flows shall be addressed where such discharges are identified by the municipality as sources of pollutants to waters of the United States: water line flushing, landscape irrigation, diverted stream flows, rising ground waters, uncontaminated ground water infiltration (as defined at 40 CFR 35.2005(20)) to separate storm sewers, uncontaminated pumped ground water, discharges from potable water sources, foundation drains, air conditioning condensation, irrigation water, springs, water from crawl space pumps, footing drains, lawn watering, individual residential car washing, flows from riparian habitats and wetlands, dechlorinated swimming pool discharges, and street wash water (program descriptions shall address discharges or flows from fire fighting only where such discharges or flows are identified as significant sources of pollutants to waters of the United States);

(*2*) A description of procedures to conduct on-going field screening activities during the life of the permit, including areas or locations that will be evaluated by such field screens;

(*3*) A description of procedures to be followed to investigate portions of the separate storm sewer system that, based on the results of the field screen, or other appropriate information, indicate a reasonable potential of containing illicit discharges or other sources of non-storm water (such procedures may include: sampling procedures for constituents such as fecal coliform, fecal streptococcus, surfactants (MBAS), residual chlorine, fluorides and potassium; testing with fluorometric dyes; or conducting in storm sewer inspections where safety and other considerations allow. Such description shall include the location of storm sewers that have been identified for such evaluation);

(*4*) A description of procedures to prevent, contain, and respond to spills that may discharge into the municipal separate storm sewer;

(*5*) A description of a program to promote, publicize, and facilitate public reporting of the presence of illicit discharges or water quality impacts associated with discharges from municipal separate storm sewers;

(*6*) A description of educational activities, public information activities, and other appropriate activities to facilitate the proper management and disposal of used oil and toxic materials; and

(*7*) A description of controls to limit infiltration of seepage from municipal sanitary sewers to municipal separate storm sewer systems where necessary;

(C) A description of a program to monitor and control pollutants in storm water discharges to municipal systems from municipal landfills, hazardous waste treatment, disposal and recovery facilities, industrial facilities that are subject to section 313 of title III of the Superfund Amendments and Reauthorization Act of 1986 (SARA), and industrial facilities that the municipal permit applicant determines are contributing a substantial pollutant loading to the municipal storm sewer system. The program shall:

(*1*) Identify priorities and procedures for inspections and establishing and implementing control measures for such discharges;

(*2*) Describe a monitoring program for storm water discharges associated with the industrial facilities identified in paragraph (d)(2)(iv)(C) of this section, to be implemented during the term of the permit, including the submission of quantitative data on the following constituents: any pollutants limited in effluent guidelines subcategories, where applicable; any pollutant listed in an existing NPDES permit for a facility; oil and grease, COD, pH, BOD_5, TSS, total phosphorus, total Kjeldahl nitrogen, nitrate plus nitrite nitrogen, and any information on discharges required under 40 CFR 122.21(g)(7) (iii) and (iv).

(D) A description of a program to implement and maintain structural and non-structural best management practices to reduce pollutants in storm water runoff from construction sites to the municipal storm sewer system, which shall include:

(*1*) A description of procedures for site planning which incorporate consideration of potential water quality impacts;

(*2*) A description of requirements for nonstructural and structural best management practices;

(*3*) A description of procedures for identifying priorities for inspecting sites and enforcing control measures which consider the nature of the construction activity, topography, and the characteristics of soils and receiving water quality; and

(*4*) A description of appropriate educational and training measures for construction site operators.

(v) *Assessment of controls.* Estimated reductions in loadings of pollutants from discharges of municipal storm sewer constituents from municipal storm sewer systems expected as the result of the municipal storm water quality management program. The assessment shall also identify known impacts of storm water controls on ground water.

(vi) *Fiscal analysis.* For each fiscal year to be covered by the permit, a fiscal analysis of the necessary capital

and operation and maintenance expenditures necessary to accomplish the activities of the programs under paragraphs (d)(2) (iii) and (iv) of this section. Such analysis shall include a description of the source of funds that are proposed to meet the necessary expenditures, including legal restrictions on the use of such funds.

(vii) Where more than one legal entity submits an application, the application shall contain a description of the roles and responsibilities of each legal entity and procedures to ensure effective coordination.

(viii) Where requirements under paragraph (d)(1)(iv)(E), (d)(2)(ii), (d)(2)(iii)(B) and (d)(2)(iv) of this section are not practicable or are not applicable, the Director may exclude any operator of a discharge from a municipal separate storm sewer which is designated under paragraph (a)(1)(v), (b)(4)(ii) or (b)(7)(ii) of this section from such requirements. The Director shall not exclude the operator of a discharge from a municipal separate storm sewer identified in appendix F, G, H or I of part 122, from any of the permit application requirements under this paragraph except where authorized under this section.

(e) *Application deadlines under paragraph (a)(1).* Any operator of a point source required to obtain a permit under paragraph (a)(1) of this section that does not have an effective NPDES permit covering its storm water outfalls shall submit an application in accordance with the following deadlines:

(1) *Individual applications.* (i) Except as provided in paragraph (e)(1)(ii) of this section, for any storm water discharge associated with industrial activity identified in paragraphs (b)(14)(i) through (xi) of this section, that is not part of a group application as described in paragraph (c)(2) of this section or which is not authorized by a storm water general permit, a permit application made pursuant to paragraph (C) of this section shall be submitted to the Director by October 1, 1992;

(ii) For any storm water discharge associated with industrial activity from a facility that is owned or operated by a municipality with a population of less than 100,000 other than an airport, powerplant, or uncontrolled sanitary landfill, permit application requirements are contained in paragraph (g) of this section.

(2) For any group application submitted in accordance with paragraph (c)(2) of this section:

(i) *Part 1.* (A) Except as provided in paragraph (e)(2)(i)(B) of this section, part 1 of the application shall be submitted to the Director, Office of Wastewater Enforcement and Compliance by September 30, 1991;

(B) Any municipality with a population of less than 250,000 shall not be required to submit a part 1 application before May 18, 1992.

(C) For any storm water discharge associated with industrial activity from a facility that is owned or operated by a municipality with a population of less than 100,000 other than an airport, powerplant, or uncontrolled sanitary landfill, permit applications requirements are reserved.

(ii) Based on information in the part 1 application, the Director will approve or deny the members in the group application within 60 days after receiving part 1 of the group application.

(iii) *Part 2.* (A) Except as provided in paragraph (e)(2)(iii)(B) of this section, part 2 of the application shall be submittted to the Director, Office of Wastewater Enforcement and Compliance by October 1, 1992;

(B) Any municipality with a population of less than 250,000 shall not be required to submit a part 1 application before May 17, 1993.

(C) For any storm water discharge associated with industrial activity from a facility that is owned or operated by a municipality with a population of less than 100,000 other than an airport, powerplant, or uncontrolled sanitary landfill, permit applications requirements are reserved.

(iv) *Rejected facilities.* (A) Except as provided in paragraph (e)(2)(iv)(B) of this section, facilities that are rejected as members of the group shall submit an individual application (or obtain coverage under an applicable general permit) no later than 12 months after the date of receipt of the notice of rejection or October 1, 1992, whichever comes first.

(B) Facilities that are owned or operated by a municipality and that are rejected as members of part 1 group application shall submit an individual application no later than 180 days after the date of receipt of the notice of rejection or October 1, 1992, whichever is later.

(v) A facility listed under paragraph (b)(14) (i)–(xi) of this section may add on to a group application submitted in accordance with paragraph (e)(2)(i) of this section at the discretion of the Office of Water Enforcement and Permits, and only upon a showing of good cause by the facility and the group applicant; the request for the addition of the facility shall be made no later than February 18, 1992; the addition of the facility shall not cause the percentage of the facilities that are required to submit quantitative data to be less than 10%, unless there are over 100 facilities in the group that are submitting quantitative data; approval to become part of group application must be obtained from the group or the trade association representing the individual facilities.

(3) For any discharge from a large municipal separate storm sewer system;

(i) Part 1 of the application shall be submitted to the Director by November 18, 1991;

(ii) Based on information received in the part 1 application the Director will approve or deny a sampling plan under paragraph (d)(1)(iv)(E) of this section within 90 days after receiving the part 1 application;

(iii) Part 2 of the application shall be submitted to the Director by November 16, 1992.

(4) For any discharge from a medium municipal separate storm sewer system;

(i) Part 1 of the application shall be submitted to the Director by May 18, 1992.

(ii) Based on information received in the part 1 application the Director will approve or deny a sampling plan under paragraph (d)(1)(iv)(E) of this section within 90 days after receiving the part 1 application.

(iii) Part 2 of the application shall be submitted to the Director by May 17, 1993.

(5) A permit application shall be submitted to the Director within 60 days of notice, unless permission for a later date is granted by the Director (*see* 40 CFR 124.52(c)), for:

(i) A storm water discharge which the Director, or in States with approved NPDES programs, either the Director or the EPA Regional Administrator, determines that the discharge contributes to a violation of a water quality standard or is a significant contributor of pollutants to waters of the United States (see paragraph (a)(1)(v) of this section);

(ii) A storm water discharge subject to paragraph (c)(1)(v) of this section.

(6) Facilities with existing NPDES permits for storm water discharges associated with industrial activity shall maintain existing permits. Facilities with permits for storm water discharges associated with industrial activity which expire on or after May 18, 1992 shall submit a new application in accordance with the requirements of 40 CFR 122.21 and 40 CFR 122.26(c) (Form 1, Form 2F, and other applicable Forms) 180 days before the expiration of such permits.

(7) The Director shall issue or deny permits for discharges composed entirely of storm water under this section in accordance with the following schedule:

(i)(A) Except as provided in paragraph (e)(7)(i)(B) of this section, the Director shall issue or deny permits for storm water discharges associated with industrial activity no later than October 1, 1993, or, for new sources or existing sources which fail to submit a complete permit application by October 1, 1992, one year after receipt of a complete permit application;

(B) For any municipality with a population of less than 250,000 which submits a timely Part I group application under paragraph (e)(2)(i)(B) of this section, the Director shall issue or deny permits for storm water discharges associated with industrial activity no later than May 17, 1994, or, for any such municipality which fails to submit a complete Part II group permit application by May 17, 1993, one year after receipt of a complete permit application;

(ii) The Director shall issue or deny permits for large municipal separate

storm sewer systems no later than November 16, 1993, or, for new sources or existing sources which fail to submit a complete permit application by November 16, 1992, one year after receipt of a complete permit application;

(iii) The Director shall issue or deny permits for medium municipal separate storm sewer systems no later than May 17, 1994, or, for new sources or existing sources which fail to submit a complete permit application by May 17, 1993, one year after receipt of a complete permit application.

(f) *Petitions.* (1) Any operator of a municipal separate storm sewer system may petition the Director to require a separate NPDES permit (or a permit issued under an approved NPDES State program) for any discharge into the municipal separate storm sewer system.

(2) Any person may petition the Director to require a NPDES permit for a discharge which is composed entirely of storm water which contributes to a violation of a water quality standard or is a significant contributor of pollutants to waters of the United States.

(3) The owner or operator of a municipal separate storm sewer system may petition the Director to reduce the Census estimates of the population served by such separate system to account for storm water discharged to combined sewers as defined by 40 CFR 35.2005(b)(11) that is treated in a publicly owned treatment works. In municipalities in which combined sewers are operated, the Census estimates of population may be reduced proportional to the fraction, based on estimated lengths, of the length of combined sewers over the sum of the length of combined sewers and municipal separate storm sewers where an applicant has submitted the NPDES permit number associated with each discharge point and a map indicating areas served by combined sewers and the location of any combined sewer overflow discharge point.

(4) Any person may petition the Director for the designation of a large or medium municipal separate storm sewer system as defined by paragraphs (b)(4)(iv) or (b)(7)(iv) of this section.

(5) The Director shall make a final determination on any petition received under this section within 90 days after receiving the petition.

(g) *Application requirements for discharges composed entirely of storm water under Clean Water Act section 402(p)(6).* Any operator of a point source required to obtain a permit under paragraph (a)(9) of this section shall submit an application in accordance with the following requirements.

(1) *Application deadlines.* The operator shall submit an application in accordance with the following deadlines:

(i) A discharger which the Director determines to contribute to a violation of a water quality standard or is a significant contributor of pollutants to waters of the United States shall apply for a permit to the Director within 180 days of receipt of notice, unless permission for a later date is granted by the Director (*see* 40 CFR 124.52(c)); or

(ii) All other dischargers shall apply to the Director no later than August 7, 2001.

(2) *Application requirements.* The operator shall submit an application in accordance with the following requirements, unless otherwise modified by the Director:

(i) *Individual application for non-municipal discharges.* The requirements contained in paragraph (c)(1) of this section.

(ii) *Application requirements for municipal separate storm sewer discharges.* The requirements contained in paragraph (d) of this section.

(iii) *Notice of intent to be covered by a general permit issued by the Director.* The requirements contained in 40 CFR 122.28(b)(2).

[55 FR 48063, Nov. 16, 1990, as amended at 56 FR 12100, Mar. 21, 1991; 56 FR 56554, Nov. 5, 1991; 57 FR 11412, Apr. 2, 1992; 57 FR 60447, Dec. 18, 1992; 60 FR 17956, Apr. 7, 1995; 60 FR 19464, Apr. 18, 1995; 60 FR 40235, Aug. 7, 1995]

§ 122.27 Silvicultural activities (applicable to State NPDES programs, see § 123.25).

(a) *Permit requirement.* Silvicultural point sources, as defined in this section, as point sources subject to the NPDES permit program.

(b) *Definitions.* (1) *Silvicultural point source* means any discernible, confined and discrete conveyance related to rock crushing, gravel washing, log

sorting, or log storage facilities which are operated in connection with silvicultural activities and from which pollutants are discharged into waters of the United States. The term does not include non-point source silvicultural activities such as nursery operations, site preparation, reforestation and subsequent cultural treatment, thinning, prescribed burning, pest and fire control, harvesting operations, surface drainage, or road construction and maintenance from which there is natural runoff. However, some of these activities (such as stream crossing for roads) may involve point source discharges of dredged or fill material which may require a CWA section 404 permit (See 33 CFR 209.120 and part 233).

(2) *Rock crushing and gravel washing facilities* means facilities which process crushed and broken stone, gravel, and riprap (See 40 CFR part 436, subpart B, including the effluent limitations guidelines).

(3) *Log sorting and log storage facilities* means facilities whose discharges result from the holding of unprocessed wood, for example, logs or roundwood with bark or after removal of bark held in self-contained bodies of water (mill ponds or log ponds) or stored on land where water is applied intentionally on the logs (wet decking). (See 40 CFR part 429, subpart I, including the effluent limitations guidelines).

§122.28 General permits (applicable to State NPDES programs, see §123.25).

(a) *Coverage.* The Director may issue a general permit in accordance with the following:

(1) *Area.* The general permit shall be written to cover a category of discharges or sludge use or disposal practices or facilities described in the permit under paragraph (a)(2)(ii) of this section, except those covered by individual permits, within a geographic area. The area shall correspond to existing geographic or political boundaries, such as:

(i) Designated planning areas under sections 208 and 303 of CWA;

(ii) Sewer districts or sewer authorities;

(iii) City, county, or State political boundaries;

(iv) State highway systems;

(v) Standard metropolitan statistical areas as defined by the Office of Management and Budget;

(vi) Urbanized areas as designated by the Bureau of the Census according to criteria in 30 FR 15202 (May 1, 1974); or

(vii) Any other appropriate division or combination of boundaries.

(2) *Sources.* The general permit may be written to regulate, within the area described in paragraph (a)(1) of this section, either:

(i) Storm water point sources; or

(ii) A category of point sources other than storm water point sources, or a category of ''treatment works treating domestic sewage,'' if the sources or ''treatment works treating domestic sewage'' all:

(A) Involve the same or substantially similar types of operations;

(B) Discharge the same types of wastes or engage in the same types of sludge use or disposal practices;

(C) Require the same effluent limitations, operating conditions, or standards for sewage sludge use or disposal;

(D) Require the same or similar monitoring; and

(E) In the opinion of the Director, are more appropriately controlled under a general permit than under individual permits.

(b) *Administration.* (1) *In general.* General permits may be issued, modified, revoked and reissued, or terminated in accordance with applicable requirements of part 124 or corresponding State regulations. Special procedures for issuance are found at §123.44 for States and §124.58 for EPA.

(2) *Authorization to discharge, or authorization to engage in sludge use and disposal practices.* (i) Except as provided in paragraphs (b)(2)(v) and (b)(2)(vi) of this section, dischargers (or treatment works treating domestic sewage) seeking coverage under a general permit shall submit to the Director a written notice of intent to be covered by the general permit. A discharger (or treatment works treating domestic sewage) who fails to submit a notice of intent in accordance with the terms of the permit is not authorized to discharge,

(or in the case of sludge disposal permit, to engage in a sludge use or disposal practice), under the terms of the general permit unless the general permit, in accordance with paragraph (b)(2)(v) of this section, contains a provision that a notice of intent is not required or the Director notifies a discharger (or treatment works treating domestic sewage) that it is covered by a general permit in accordance with paragraph (b)(2)(vi) of this section. A complete and timely, notice of intent (NOI), to be covered in accordance with general permit requirements, fulfills the requirements for permit applications for purposes of §§ 122.6, 122.21 and 122.26.

(ii) The contents of the notice of intent shall be specified in the general permit and shall require the submission of information necessary for adequate program implementation, including at a minimum, the legal name and address of the owner or operator, the facility name and address, type of facility or discharges, and the receiving stream(s). General permits for storm water discharges associated with industrial activity from inactive mining, inactive oil and gas operations, or inactive landfills occurring on Federal lands where an operator cannot be identified may contain alternative notice of intent requirements. All notices of intent shall be signed in accordance with § 122.22.

(iii) General permits shall specify the deadlines for submitting notices of intent to be covered and the date(s) when a discharger is authorized to discharge under the permit;

(iv) General permits shall specify whether a discharger (or treatment works treating domestic sewage) that has submitted a complete and timely notice of intent to be covered in accordance with the general permit and that is eligible for coverage under the permit, is authorized to discharge, (or in the case of a sludge disposal permit, to engage in a sludge use or disposal practice), in accordance with the permit either upon receipt of the notice of intent by the Director, after a waiting period specified in the general permit, on a date specified in the general permit, or upon receipt of notification of inclusion by the Director. Coverage may be terminated or revoked in accordance with paragraph (b)(3) of this section.

(v) Discharges other than discharges from publicly owned treatment works, combined sewer overflows, primary industrial facilities, and storm water discharges associated with industrial activity, may, at the discretion of the Director, be authorized to discharge under a general permit without submitting a notice of intent where the Director finds that a notice of intent requirement would be inappropriate. In making such a finding, the Director shall consider: the type of discharge; the expected nature of the discharge; the potential for toxic and conventional pollutants in the discharges; the expected volume of the discharges; other means of identifying discharges covered by the permit; and the estimated number of discharges to be covered by the permit. The Director shall provide in the public notice of the general permit the reasons for not requiring a notice of intent.

(vi) The Director may notify a discharger (or treatment works treating domestic sewage) that it is covered by a general permit, even if the discharger (or treatment works treating domestic sewage) has not submitted a notice of intent to be covered. A discharger (or treatment works treating domestic sewage) so notified may request an individual permit under paragraph (b)(3)(iii) of this section.

(3) *Requiring an individual permit.* (i) The Director may require any discharger authorized by a general permit to apply for and obtain an individual NPDES permit. Any interested person may petition the Director to take action under this paragraph. Cases where an individual NPDES permit may be required include the following:

(A) The discharger or ''treatment works treating domestic sewage'' is not in compliance with the conditions of the general NPDES permit;

(B) A change has occurred in the availability of demonstrated technology or practices for the control or abatement of pollutants applicable to the point source or treatment works treating domestic sewage;

(C) Effluent limitation guidelines are promulgated for point sources covered by the general NPDES permit;

(D) A Water Quality Management plan containing requirements applicable to such point sources is approved;

(E) Circumstances have changed since the time of the request to be covered so that the discharger is no longer appropriately controlled under the general permit, or either a temporary or permanent reduction or elimination of the authorized discharge is necessary;

(F) Standards for sewage sludge use or disposal have been promulgated for the sludge use and disposal practice covered by the general NPDES permit; or

(G) The discharge(s) is a significant contributor of pollutants. In making this determination, the Director may consider the following factors:

(*1*) The location of the discharge with respect to waters of the United States;

(*2*) The size of the discharge;

(*3*) The quantity and nature of the pollutants discharged to waters of the United States; and

(*4*) Other relevant factors;

(ii) *For EPA issued general permits only,* the Regional Administrator may require any owner or operator authorized by a general permit to apply for an individual NPDES permit as provided in paragraph (b)(3)(i) of this section, only if the owner or operator has been notified in writing that a permit application is required. This notice shall include a brief statement of the reasons for this decision, an application form, a statement setting a time for the owner or operator to file the application, and a statement that on the effective date of the individual NPDES permit the general permit as it applies to the individual permittee shall automatically terminate. The Director may grant additional time upon request of the applicant.

(iii) Any owner or operator authorized by a general permit may request to be excluded from the coverage of the general permit by applying for an individual permit. The owner or operator shall submit an application under § 122.21, with reasons supporting the request, to the Director no later than 90 days after the publication by EPA of the general permit in the FEDERAL REGISTER or the publication by a State in accordance with applicable State law. The request shall be processed under part 124 or applicable State procedures. The request shall be granted by issuing of any individual permit if the reasons cited by the owner or operator are adequate to support the request.

(iv) When an individual NPDES permit is issued to an owner or operator otherwise subject to a general NPDES permit, the applicability of the general permit to the individual NPDES permittee is automatically terminated on the effective date of the individual permit.

(v) A source excluded from a general permit solely because it already has an individual permit may request that the individual permit be revoked, and that it be covered by the general permit. Upon revocation of the individual permit, the general permit shall apply to the source.

(c) *Offshore oil and gas facilities* (Not applicable to State programs). (1) The Regional Administrator shall, except as provided below, issue general permits covering discharges from offshore oil and gas exploration and production facilities within the Region's jurisdiction. Where the offshore area includes areas, such as areas of biological concern, for which separate permit conditions are required, the Regional Administrator may issue separate general permits, individual permits, or both. The reason for separate general permits or individual permits shall be set forth in the appropriate fact sheets or statements of basis. Any statement of basis or fact sheet for a draft permit shall include the Regional Administrator's tentative determination as to whether the permit applies to ''new sources,'' ''new dischargers,'' or existing sources and the reasons for this determination, and the Regional Administrator's proposals as to areas of biological concern subject either to separate individual or general permits. For Federally leased lands, the general permit area should generally be no less extensive than the lease sale area defined by the Department of the Interior.

(2) Any interested person, including any prospective permittee, may petition the Regional Administrator to

issue a general permit. Unless the Regional Administrator determines under paragraph (c)(1) of this section that no general permit is appropriate, he shall promptly provide a project decision schedule covering the issuance of the general permit or permits for any lease sale area for which the Department of the Interior has published a draft environmental impact statement. The project decision schedule shall meet the requirements of § 124.3(g), and shall include a schedule providing for the issuance of the final general permit or permits not later than the date of the final notice of sale projected by the Department of the Interior or six months after the date of the request, whichever is later. The Regional Administrator may, at his discretion, issue a project decision schedule for offshore oil and gas facilities in the territorial seas.

(3) Nothing in this paragraph (c) shall affect the authority of the Regional Administrator to require an individual permit under § 122.28(b)(3)(i) (A) through (G).

(Clean Water Act (33 U.S.C. 1251 *et seq.*), Safe Drinking Water Act (42 U.S.C. 300f *et seq.*), Clean Air Act (42 U.S.C. 7401 *et seq.*), Resource Conservation and Recovery Act (42 U.S.C. 6901 *et seq.*))

[48 FR 14153, Apr. 1, 1983, as amended at 48 FR 39619, Sept. 1, 1983; 49 FR 38048, Sept. 26, 1984; 50 FR 6940, Feb. 19, 1985; 54 FR 18782, May 2, 1989; 55 FR 48072, Nov. 16, 1990; 57 FR 11412 and 11413, Apr. 2, 1992]

§ 122.29 New sources and new dischargers.

(a) *Definitions.* (1) *New source* and *new discharger* are defined in § 122.2. [See Note 2.]

(2) *Source* means any building, structure, facility, or installation from which there is or may be a discharge of pollutants.

(3) *Existing source* means any source which is not a new source or a new discharger.

(4) *Site* is defined in § 122.2;

(5) *Facilities or equipment* means buildings, structures, process or production equipment or machinery which form a permanent part of the new source and which will be used in its operation, if these facilities or equipment are of such value as to represent a substantial commitment to construct. It excludes facilities or equipment used in connection with feasibility, engineering, and design studies regarding the source or water pollution treatment for the source.

(b) *Criteria for new source determination.* (1) Except as otherwise provided in an applicable new source performance standard, a source is a ''new source'' if it meets the definition of ''new source'' in § 122.2, and

(i) It is constructed at a site at which no other source is located; or

(ii) It totally replaces the process or production equipment that causes the discharge of pollutants at an existing source; or

(iii) Its processes are substantially independent of an existing source at the same site. In determining whether these processes are substantially independent, the Director shall consider such factors as the extent to which the new facility is integrated with the existing plant; and the extent to which the new facility is engaged in the same general type of activity as the existing source.

(2) A source meeting the requirements of paragraphs (b)(1) (i), (ii), or (iii) of this section is a new source only if a new source performance standard is independently applicable to it. If there is no such independently applicable standard, the source is a new discharger. See § 122.2.

(3) Construction on a site at which an existing source is located results in a modification subject to § 122.62 rather than a new source (or a new discharger) if the construction does not create a new building, structure, facility, or installation meeting the criteria of paragraph (b)(1) (ii) or (iii) of this section but otherwise alters, replaces, or adds to existing process or production equipment.

(4) Construction of a new source as defined under § 122.2 has commenced if the owner or operator has:

(i) Begun, or caused to begin as part of a continuous on-site construction program:

(A) Any placement, assembly, or installation of facilities or equipment; or

(B) Significant site preparation work including clearing, excavation or removal of existing buildings, structures, or facilities which is necessary for the

placement, assembly, or installation of new source facilities or equipment; or

(ii) Entered into a binding contractual obligation for the purchase of facilities or equipment which are intended to be used in its operation with a reasonable time. Options to purchase or contracts which can be terminated or modified without substantial loss, and contracts for feasibility engineering, and design studies do not constitute a contractual obligation under the paragraph.

(c) *Requirement for an environmental impact statement.* (1) The issuance of an NPDES permit to new source:

(i) By EPA may be a major Federal action significantly affecting the quality of the human environment within the meaning of the National Environmental Policy Act of 1969 (NEPA), 33 U.S.C. 4321 *et seq.* and is subject to the environmental review provisions of NEPA as set out in 40 CFR part 6, subpart F. EPA will determine whether an Environmental Impact Statement (EIS) is required under § 122.21(k) (special provisions for applications from new sources) and 40 CFR part 6, subpart F;

(ii) By an NPDES approved State is not a Federal action and therefore does not require EPA to conduct an environmental review.

(2) An EIS prepared under this paragraph shall include a recommendation either to issue or deny the permit.

(i) If the recommendation is to deny the permit, the final EIS shall contain the reasons for the recommendation and list those measures, if any, which the applicant could take to cause the recommendation to be changed;

(ii) If the recommendation is to issue the permit, the final EIS shall recommend the actions, if any, which the permittee should take to prevent or minimize any adverse environmental impacts;

(3) The Regional Administrator, to the extent allowed by law, shall issue, condition (other than imposing effluent limitations), or deny the new source NPDES permit following a complete evaluation of any significant beneficial and adverse impacts of the proposed action and a review of the recommendations contained in the EIS or finding of no significant impact.

(d) *Effect of compliance with new source performance standards.* (The provisions of this paragraph do not apply to existing sources which modify their pollution control facilities or construct new pollution control facilities and achieve performance standards, but which are neither new sources or new dischargers or otherwise do not meet the requirements of this paragraph.)

(1) Except as provided in paragraph (d)(2) of this section, any new discharger, the construction of which commenced after October 18, 1972, or new source which meets the applicable promulgated new source performance standards before the commencement of discharge, may not be subject to any more stringent new source performance standards or to any more stringent technology-based standards under section 301(b)(2) of CWA for the soonest ending of the following periods:

(i) Ten years from the date that construction is completed;

(ii) Ten years from the date the source begins to discharge process or other nonconstruction related wastewater; or

(iii) The period of depreciation or amortization of the facility for the purposes of section 167 or 169 (or both) of the Internal Revenue Code of 1954.

(2) The protection from more stringent standards of performance afforded by paragraph (d)(1) of this section does not apply to:

(i) Additional or more stringent permit conditions which are not technology based; for example, conditions based on water quality standards, or toxic effluent standards or prohibitions under section 307(a) of CWA; or

(ii) Additional permit conditions in accordance with § 125.3 controlling toxic pollutants or hazardous substances which are not controlled by new source performance standards. This includes permit conditions controlling pollutants other than those identified as toxic pollutants or hazardous substances when control of these pollutants has been specifically identified as the method to control the toxic pollutants or hazardous substances.

(3) When an NPDES permit issued to a source with a ''protection period'' under paragraph (d)(1) of this section

will expire on or after the expiration of the protection period, that permit shall require the owner or operator of the source to comply with the requirements of section 301 and any other then applicable requirements of CWA immediately upon the expiration of the protection period. No additional period for achieving compliance with these requirements may be allowed except when necessary to achieve compliance with requirements promulgated less than 3 years before the expiration of the protection period.

(4) The owner or operator of a new source, a new discharger which commenced discharge after August 13, 1979, or a recommencing discharger shall install and have in operating condition, and shall ''start-up'' all pollution control equipment required to meet the conditions of its permits before beginning to discharge. Within the shortest feasible time (not to exceed 90 days), the owner or operator must meet all permit conditions. The requirements of this paragraph do not apply if the owner or operator is issued a permit containing a compliance schedule under § 122.47(a)(2).

(5) After the effective date of new source performance standards, it shall be unlawful for any owner or operator of any new source to operate the source in violation of those standards applicable to the source.

[48 FR 14153, Apr. 1, 1983, as amended at 49 FR 38048, Sept. 26, 1984; 50 FR 4514, Jan. 31, 1985; 50 FR 6941, Feb. 19, 1985]

Subpart C—Permit Conditions

§ 122.41 Conditions applicable to all permits (applicable to State programs, see § 123.25).

The following conditions apply to all NPDES permits. Additional conditions applicable to NPDES permits are in § 122.42. All conditions applicable to NPDES permits shall be incorporated into the permits either expressly or by reference. If incorporated by reference, a specific citation to these regulations (or the corresponding approved State regulations) must be given in the permit.

(a) *Duty to comply.* The permittee must comply with all conditions of this permit. Any permit noncompliance constitutes a violation of the Clean Water Act and is grounds for enforcement action; for permit termination, revocation and reissuance, or modification; or denial of a permit renewal application.

(1) The permittee shall comply with effluent standards or prohibitions established under section 307(a) of the Clean Water Act for toxic pollutants and with standards for sewage sludge use or disposal established under section 405(d) of the CWA within the time provided in the regulations that establish these standards or prohibitions or standards for sewage sludge use or disposal, even if the permit has not yet been modified to incorporate the requirement.

(2) The Clean Water Act provides that any person who violates section 301, 302, 306, 307, 308, 318 or 405 of the Act, or any permit condition or limitation implementing any such sections in a permit issued under section 402, or any requirement imposed in a pretreatment program approved under sections 402(a)(3) or 402(b)(8) of the Act, is subject to a civil penalty not to exceed $25,000 per day for each violation. The Clean Water Act provides that any person who *negligently* violates sections 301, 302, 306, 307, 308, 318, or 405 of the Act, or any condition or limitation implementing any of such sections in a permit issued under section 402 of the Act, or any requirement imposed in a pretreatment program approved under section 402(a)(3) or 402(b)(8) of the Act, is subject to criminal penalties of $2,500 to $25,000 per day of violation, or imprisonment of not more than 1 year, or both. In the case of a second or subsequent conviction for a negligent violation, a person shall be subject to criminal penalties of not more than $50,000 per day of violation, or by imprisonment of not more than 2 years, or both. Any person who *knowingly* violates such sections, or such conditions or limitations is subject to criminal penalties of $5,000 to $50,000 per day of violation, or imprisonment for not more than 3 years, or both. In the case of a second or subsequent conviction for a knowing violation, a person shall be subject to criminal penalties of not more than $100,000 per day of violation, or imprisonment of not more than 6

years, or both. Any person who knowingly violates section 301, 302, 303, 306, 307, 308, 318 or 405 of the Act, or any permit condition or limitation implementing any of such sections in a permit issued under section 402 of the Act, and who knows at that time that he thereby places another person in imminent danger of death or serious bodily injury, shall, upon conviction, be subject to a fine of not more than $250,000 or imprisonment of not more than 15 years, or both. In the case of a second or subsequent conviction for a knowing endangerment violation, a person shall be subject to a fine of not more than $500,000 or by imprisonment of not more than 30 years, or both. An organization, as defined in section 309(c)(3)(B)(iii) of the CWA, shall, upon conviction of violating the imminent danger provision, be subject to a fine of not more than $1,000,000 and can be fined up to $2,000,000 for second or subsequent convictions.

(3) Any person may be assessed an administrative penalty by the Administrator for violating section 301, 302, 306, 307, 308, 318 or 405 of this Act, or any permit condition or limitation implementing any of such sections in a permit issued under section 402 of this Act. Administrative penalties for Class I violations are not to exceed $10,000 per violation, with the maximum amount of any Class I penalty assessed not to exceed $25,000. Penalties for Class II violations are not to exceed $10,000 per day for each day during which the violation continues, with the maximum amount of any Class II penalty not to exceed $125,000.

(b) *Duty to reapply.* If the permittee wishes to continue an activity regulated by this permit after the expiration date of this permit, the permittee must apply for and obtain a new permit.

(c) *Need to halt or reduce activity not a defense.* It shall not be a defense for a permittee in an enforcement action that it would have been necessary to halt or reduce the permitted activity in order to maintain compliance with the conditions of this permit.

(d) *Duty to mitigate.* The permittee shall take all reasonable steps to minimize or prevent any discharge or sludge use or disposal in violation of this permit which has a reasonable likelihood of adversely affecting human health or the environment.

(e) *Proper operation and maintenance.* The permittee shall at all times properly operate and maintain all facilities and systems of treatment and control (and related appurtenances) which are installed or used by the permittee to achieve compliance with the conditions of this permit. Proper operation and maintenance also includes adequate laboratory controls and appropriate quality assurance procedures. This provision requires the operation of back-up or auxiliary facilities or similar systems which are installed by a permittee only when the operation is necessary to achieve compliance with the conditions of the permit.

(f) *Permit actions.* This permit may be modified, revoked and reissued, or terminated for cause. The filing of a request by the permittee for a permit modification, revocation and reissuance, or termination, or a notification of planned changes or anticipated noncompliance does not stay any permit condition.

(g) *Property rights.* This permit does not convey any property rights of any sort, or any exclusive privilege.

(h) *Duty to provide information.* The permittee shall furnish to the Director, within a reasonable time, any information which the Director may request to determine whether cause exists for modifying, revoking and reissuing, or terminating this permit or to determine compliance with this permit. The permittee shall also furnish to the Director upon request, copies of records required to be kept by this permit.

(i) *Inspection and entry.* The permittee shall allow the Director, or an authorized representative (including an authorized contractor acting as a representative of the Administrator), upon presentation of credentials and other documents as may be required by law, to:

(1) Enter upon the permittee's premises where a regulated facility or activity is located or conducted, or where records must be kept under the conditions of this permit;

(2) Have access to and copy, at reasonable times, any records that must

be kept under the conditions of this permit;

(3) Inspect at reasonable times any facilities, equipment (including monitoring and control equipment), practices, or operations regulated or required under this permit; and

(4) Sample or monitor at reasonable times, for the purposes of assuring permit compliance or as otherwise authorized by the Clean Water Act, any substances or parameters at any location.

(j) *Monitoring and records.* (1) Samples and measurements taken for the purpose of monitoring shall be representative of the monitored activity.

(2) Except for records of monitoring information required by this permit related to the permittee's sewage sludge use and disposal activities, which shall be retained for a period of at least five years (or longer as required by 40 CFR part 503), the permittee shall retain records of all monitoring information, including all calibration and maintenance records and all original strip chart recordings for continuous monitoring instrumentation, copies of all reports required by this permit, and records of all data used to complete the application for this permit, for a period of at least 3 years from the date of the sample, measurement, report or application. This period may be extended by request of the Director at any time.

(3) Records of monitoring information shall include:

(i) The date, exact place, and time of sampling or measurements;

(ii) The individual(s) who performed the sampling or measurements;

(iii) The date(s) analyses were performed;

(iv) The individual(s) who performed the analyses;

(v) The analytical techniques or methods used; and

(vi) The results of such analyses.

(4) Monitoring results must be conducted according to test procedures approved under 40 CFR part 136 or, in the case of sludge use or disposal, approved under 40 CFR part 136 unless otherwise specified in 40 CFR part 503, unless other test procedures have been specified in the permit.

(5) The Clean Water Act provides that any person who falsifies, tampers with, or knowingly renders inaccurate any monitoring device or method required to be maintained under this permit shall, upon conviction, be punished by a fine of not more than $10,000, or by imprisonment for not more than 2 years, or both. If a conviction of a person is for a violation committed after a first conviction of such person under this paragraph, punishment is a fine of not more than $20,000 per day of violation, or by imprisonment of not more than 4 years, or both.

(k) *Signatory requirement.* (1) All applications, reports, or information submitted to the Director shall be signed and certified. (See § 122.22)

(2) The CWA provides that any person who knowingly makes any false statement, representation, or certification in any record or other document submitted or required to be maintained under this permit, including monitoring reports or reports of compliance or non-compliance shall, upon conviction, be punished by a fine of not more than $10,000 per violation, or by imprisonment for not more than 6 months per violation, or by both.

(l) *Reporting requirements.* (1) *Planned changes.* The permittee shall give notice to the Director as soon as possible of any planned physical alterations or additions to the permitted facility. Notice is required only when:

(i) The alteration or addition to a permitted facility may meet one of the criteria for determining whether a facility is a new source in § 122.29(b); or

(ii) The alteration or addition could significantly change the nature or increase the quantity of pollutants discharged. This notification applies to pollutants which are subject neither to effluent limitations in the permit, nor to notification requirements under § 122.42(a)(1).

(iii) The alteration or addition results in a significant change in the permittee's sludge use or disposal practices, and such alteration, addition, or change may justify the application of permit conditions that are different from or absent in the existing permit, including notification of additional use or disposal sites not reported during the permit application process or not reported pursuant to an approved land application plan;

(2) *Anticipated noncompliance.* The permittee shall give advance notice to the Director of any planned changes in the permitted facility or activity which may result in noncompliance with permit requirements.

(3) *Transfers.* This permit is not transferable to any person except after notice to the Director. The Director may require modification or revocation and reissuance of the permit to change the name of the permittee and incorporate such other requirements as may be necessary under the Clean Water Act. (See § 122.61; in some cases, modification or revocation and reissuance is mandatory.)

(4) *Monitoring reports.* Monitoring results shall be reported at the intervals specified elsewhere in this permit.

(i) Monitoring results must be reported on a Discharge Monitoring Report (DMR) or forms provided or specified by the Director for reporting results of monitoring of sludge use or disposal practices.

(ii) If the permittee monitors any pollutant more frequently than required by the permit using test procedures approved under 40 CFR part 136 or, in the case of sludge use or disposal, approved under 40 CFR part 136 unless otherwise specified in 40 CFR part 503, or as specified in the permit, the results of this monitoring shall be included in the calculation and reporting of the data submitted in the DMR or sludge reporting form specified by the Director.

(iii) Calculations for all limitations which require averaging of measurements shall utilize an arithmetic mean unless otherwise specified by the Director in the permit.

(5) *Compliance schedules.* Reports of compliance or noncompliance with, or any progress reports on, interim and final requirements contained in any compliance schedule of this permit shall be submitted no later than 14 days following each schedule date.

(6) *Twenty-four hour reporting.* (i) The permittee shall report any noncompliance which may endanger health or the environment. Any information shall be provided orally within 24 hours from the time the permittee becames aware of the circumstances. A written submission shall also be provided within 5 days of the time the permittee becomes aware of the circumstances. The written submission shall contain a description of the noncompliance and its cause; the period of noncompliance, including exact dates and times, and if the noncompliance has not been corrected, the anticipated time it is expected to continue; and steps taken or planned to reduce, eliminate, and prevent reoccurrence of the noncompliance.

(ii) The following shall be included as information which must be reported within 24 hours under this paragraph.

(A) Any unanticipated bypass which exceeds any effluent limitation in the permit. (See § 122.41(g).

(B) Any upset which exceeds any effluent limitation in the permit.

(C) Violation of a maximum daily discharge limitation for any of the pollutants listed by the Director in the permit to be reported within 24 hours. (See § 122.44(g).)

(iii) The Director may waive the written report on a case-by-case basis for reports under paragraph (l)(6)(ii) of this section if the oral report has been received within 24 hours.

(7) *Other noncompliance.* The permittee shall report all instances of noncompliance not reported under paragraphs (l) (4), (5), and (6) of this section, at the time monitoring reports are submitted. The reports shall contain the information listed in paragraph (l)(6) of this section.

(8) *Other information.* Where the permittee becomes aware that it failed to submit any relevant facts in a permit application, or submitted incorrect information in a permit application or in any report to the Director, it shall promptly submit such facts or information.

(m) *Bypass*—(1) *Definitions.* (i) *Bypass* means the intentional diversion of waste streams from any portion of a treatment facility.

(ii) *Severe property damage* means substantial physical damage to property, damage to the treatment facilities which causes them to become inoperable, or substantial and permanent loss of natural resources which can reasonably be expected to occur in the absence of a bypass. Severe property

damage does not mean economic loss caused by delays in production.

(2) *Bypass not exceeding limitations.* The permittee may allow any bypass to occur which does not cause effluent limitations to be exceeded, but only if it also is for essential maintenance to assure efficient operation. These bypasses are not subject to the provisions of paragraphs (m)(3) and (m)(4) of this section.

(3) *Notice*—(i) *Anticipated bypass.* If the permittee knows in advance of the need for a bypass, it shall submit prior notice, if possible at least ten days before the date of the bypass.

(ii) *Unanticipated bypass.* The permittee shall submit notice of an unanticipated bypass as required in paragraph (l)(6) of this section (24-hour notice).

(4) *Prohibition of bypass.* (i) Bypass is prohibited, and the Director may take enforcement action against a permittee for bypass, unless:

(A) Bypass was unavoidable to prevent loss of life, personal injury, or severe property damage;

(B) There were no feasible alternatives to the bypass, such as the use of auxiliary treatment facilities, retention of untreated wastes, or maintenance during normal periods of equipment downtime. This condition is not satisfied if adequate back-up equipment should have been installed in the exercise of reasonable engineering judgment to prevent a bypass which occurred during normal periods of equipment downtime or preventive maintenance; and

(C) The permittee submitted notices as required under paragraph (m)(3) of this section.

(ii) The Director may approve an anticipated bypass, after considering its adverse effects, if the Director determines that it will meet the three conditions listed above in paragraph (m)(4)(i) of this section.

(n) *Upset*—(1) *Definition. Upset* means an exceptional incident in which there is unintentional and temporary noncompliance with technology based permit effluent limitations because of factors beyond the reasonable control of the permittee. An upset does not include noncompliance to the extent caused by operational error, improperly designed treatment facilities, inadequate treatment facilities, lack of preventive maintenance, or careless or improper operation.

(2) *Effect of an upset.* An upset constitutes an affirmative defense to an action brought for noncompliance with such technology based permit effluent limitations if the requirements of paragraph (n)(3) of this section are met. No determination made during administrative review of claims that noncompliance was caused by upset, and before an action for noncompliance, is final administrative action subject to judicial review.

(3) *Conditions necessary for a demonstration of upset.* A permittee who wishes to establish the affirmative defense of upset shall demonstrate, through properly signed, contemporaneous operating logs, or other relevant evidence that:

(i) An upset occurred and that the permittee can identify the cause(s) of the upset;

(ii) The permitted facility was at the time being properly operated; and

(iii) The permittee submitted notice of the upset as required in paragraph (1)(6)(ii)(B) of this section (24 hour notice).

(iv) The permittee complied with any remedial measures required under paragraph (d) of this section.

(4) *Burden of proof.* In any enforcement proceeding the permittee seeking to establish the occurrence of an upset has the burden of proof.

(Clean Water Act (33 U.S.C. 1251 *et seq.*), Safe Drinking Water Act (42 U.S.C. 300f *et seq.*), Clean Air Act (42 U.S.C. 7401 *et seq.*), Resource Conservation and Recovery Act (42 U.S.C. 6901 *et seq.*))

[48 FR 14153, Apr. 1, 1983, as amended at 48 FR 39620, Sept. 1, 1983; 49 FR 38049, Sept. 26, 1984; 50 FR 4514, Jan. 31, 1985; 50 FR 6940, Feb. 19, 1985; 54 FR 255, Jan. 4, 1989; 54 FR 18783, May 2, 1989]

§ 122.42 Additional conditions applicable to specified categories of NPDES permits (applicable to State NPDES programs, see § 123.25).

The following conditions, in addition to those set forth in § 122.41, apply to all NPDES permits within the categories specified below:

(a) *Existing manufacturing, commercial, mining, and silvicultural dischargers.* In addition to the reporting requirements

under § 122.41(1), all existing manufacturing, commercial, mining, and silvicultural dischargers must notify the Director as soon as they know or have reason to believe:

(1) That any activity has occurred or will occur which would result in the discharge, on a routine or frequent basis, of any toxic pollutant which is not limited in the permit, if that discharge will exceed the highest of the following ''notification levels'':

(i) One hundred micrograms per liter (100 μg/l);

(ii) Two hundred micrograms per liter (200 μg/l) for acrolein and acrylonitrile; five hundred micrograms per liter (500 μg/l) for 2,4-dinitrophenol and for 2-methyl-4,6-dinitrophenol; and one milligram per liter (1 mg/l) for antimony;

(iii) Five (5) times the maximum concentration value reported for that pollutant in the permit application in accordance with § 122.21(g)(7); or

(iv) The level established by the Director in accordance with § 122.44(f).

(2) That any activity has occurred or will occur which would result in any discharge, on a non-routine or infrequent basis, of a toxic pollutant which is not limited in the permit, if that discharge will exceed the highest of the following ''notification levels'':

(i) Five hundred micrograms per liter (500 μg/l);

(ii) One milligram per liter (1 mg/l) for antimony;

(iii) Ten (10) times the maximum concentration value reported for that pollutant in the permit application in accordance with § 122.21(g)(7).

(iv) The level established by the Director in accordance with § 122.44(f).

(b) *Publicly owned treatment works.* All POTWs must provide adequate notice to the Director of the following:

(1) Any new introduction of pollutants into the POTW from an indirect discharger which would be subject to section 301 or 306 of CWA if it were directly discharging those pollutants; and

(2) Any substantial change in the volume or character of pollutants being introduced into that POTW by a source introducing pollutants into the POTW at the time of issuance of the permit.

(3) For purposes of this paragraph, adequate notice shall include information on (i) the quality and quantity of effluent introduced into the POTW, and (ii) any anticipated impact of the change on the quantity or quality of effluent to be discharged from the POTW.

(c) *Municipal separate storm sewer systems.* The operator of a large or medium municipal separate storm sewer system or a municipal separate storm sewer that has been designated by the Director under § 122.26(a)(1)(v) of this part must submit an annual report by the anniversary of the date of the issuance of the permit for such system. The report shall include:

(1) The status of implementing the components of the storm water management program that are established as permit conditions;

(2) Proposed changes to the storm water management programs that are established as permit condition. Such proposed changes shall be consistent with § 122.26(d)(2)(iii) of this part; and

(3) Revisions, if necessary, to the assessment of controls and the fiscal analysis reported in the permit application under § 122.26(d)(2)(iv) and (d)(2)(v) of this part;

(4) A summary of data, including monitoring data, that is accumulated throughout the reporting year;

(5) Annual expenditures and budget for year following each annual report;

(6) A summary describing the number and nature of enforcement actions, inspections, and public education programs;

(7) Identification of water quality improvements or degradation;

(d) *Storm water discharges.* The initial permits for discharges composed entirely of storm water issued pursuant to § 122.26(e)(7) of this part shall require compliance with the conditions of the permit as expeditiously as practicable, but in no event later than three years after the date of issuance of the permit.

[48 FR 14153, Apr. 1, 1983, as amended at 49 FR 38049, Sept. 26, 1984; 50 FR 4514, Jan. 31, 1985; 55 FR 48073, Nov. 16, 1990; 57 FR 60448, Dec. 18, 1992]

§ 122.43 Establishing permit conditions (applicable to State programs, see § 123.25).

(a) In addition to conditions required in all permits (§§ 122.41 and 122.42), the Director shall establish conditions, as required on a case-by-case basis, to provide for and assure compliance with all applicable requirements of CWA and regulations. These shall include conditions under §§ 122.46 (duration of permits), 122.47(a) (schedules of compliance), 122.48 (monitoring), and for EPA permits only 122.47(b) (alternates schedule of compliance) and 122.49 (considerations under Federal law).

(b)(1) For a State issued permit, an applicable requirement is a State statutory or regulatory requirement which takes effect prior to final administrative disposition of a permit. For a permit issued by EPA, an applicable requirement is a statutory or regulatory requirement (including any interim final regulation) which takes effect prior to the issuance of the permit (except as provided in § 124.86(c) for NPDES permits being processed under subpart E or F of part 124). Section 124.14 (reopening of comment period) provides a means for reopening EPA permit proceedings at the discretion of the Director where new requirements become effective during the permitting process and are of sufficient magnitude to make additonal proceedings desirable. For State and EPA administered programs, an applicable requirement is also any requirement which takes effect prior to the modification or revocation and reissuance of a permit, to the extent allowed in § 122.62.

(2) New or reissued permits, and to the extent allowed under § 122.62 modified or revoked and reissued permits, shall incorporate each of the applicable requirements referenced in §§ 122.44 and 122.45.

(c) *Incorporation*. All permit conditions shall be incorporated either expressly or by reference. If incorporated by reference, a specific citation to the applicable regulations or requirements must be given in the permit.

§ 122.44 Establishing limitations, standards, and other permit conditions (applicable to State NPDES programs, see § 123.25).

In addition to the conditions established under § 122.43(a), each NPDES permit shall include conditions meeting the following requirements when applicable.

(a) *Technology-based effluent limitations and standards* based on effluent limitations and standards promulgated under section 301 of CWA or new source performance standards promulgated under section 306 of CWA, on case-by-case effluent limitations determined under section 402(a)(1) of CWA, or on a combination of the two, in accordance with § 125.3. For new sources or new dischargers, these technology based limitations and standards are subject to the provisions of § 122.29(d) (protection period).

(b)(1) *Other effluent limitations and standards* under sections 301, 302, 303, 307, 318 and 405 of CWA. If any applicable toxic effluent standard or prohibition (including any schedule of compliance specified in such effluent standard or prohibition) is promulgated under section 307(a) of CWA for a toxic pollutant and that standard or prohibition is more stringent than any limitation on the pollutant in the permit, the Director shall institute proceedings under these regulations to modify or revoke and reissue the permit to conform to the toxic effluent standard or prohibition. See also § 122.41(a).

(2) *Standards for sewage sludge use or disposal* under section 405(d) of the CWA unless those standards have been included in a permit issued under the appropriate provisions of subtitle C of the Solid Waste Disposal Act, Part C of Safe Drinking Water Act, the Marine Protection, Research, and Sanctuaries Act of 1972, or the Clean Air Act, or under State permit programs approved by the Administrator. When there are no applicable standards for sewage sludge use or disposal, the permit may include requirements developed on a case-by-case basis to protect public health and the environment from any adverse effects which may occur from toxic pollutants in sewage sludge. If

any applicable standard for sewage sludge use or disposal is promulgated under section 405(d) of the CWA and that standard is more stringent than any limitation on the pollutant or practice in the permit, the Director may initiate proceedings under these regulations to modify or revoke and reissue the permit to conform to the standard for sewage sludge use or disposal.

(c) *Reopener clause:* for any discharger within a primary industry category (see appendix A), requirements under section 307(a)(2) of CWA as follows:

(1) On or before June 30, 1981: (i) If applicable standards or limitations have not yet been promulgated, the permit shall include a condition stating that, if an applicable standard or limitation is promulgated under sections 301(b)(2)(C) and (D), 304(b)(2), and 307(a)(2) and that effluent standard or limitation is more stringent than any effluent limitation in the permit or controls a pollutant not limited in the permit, the permit shall be promptly modified or revoked and reissued to conform to that effluent standard or limitation.

(ii) If applicable standards or limitations have been promulgated or approved, the permit shall include those standards or limitations. (If EPA approves existing effluent limitations or decides not to develop new effluent limitations, it will publish a notice in the FEDERAL REGISTER that the limitations are ''approved'' for the purpose of this regulation.)

(2) On or after the statutory deadline set forth in section 301(b)(2) (A), (C), and (E) of CWA, any permit issued shall include effluent limitations to meet the requirements of section 301(b)(2) (A), (C), (D), (E), (F), whether or not applicable effluent limitations guidelines have been promulgated or approved. These permits need not incorporate the clause required by paragraph (c)(1) of this section.

(3) The Director shall promptly modify or revoke and reissue any permit containing the clause required under paragraph (c)(1) of this section to incorporate an applicable effluent standard or limitation under sections 301(b)(2) (C) and (D), 304(b)(2) and 307(a)(2) which is promulgated or approved after the permit is issued if that effluent standard or limitation is more stringent than any effluent limitation in the permit, or controls a pollutant not limited in the permit.

(4) For any permit issued to a treatment works treating domestic sewage (including ''sludge-only facilities''), the Director shall include a reopener clause to incorporate any applicable standard for sewage sludge use or disposal promulgated under section 405(d) of the CWA. The Director may promptly modify or revoke and reissue any permit containing the reopener clause required by this paragraph if the standard for sewage sludge use or disposal is more stringent than any requirements for sludge use or disposal in the permit, or controls a pollutant or practice not limited in the permit.

(d) *Water quality standards and State requirements:* any requirements in addition to or more stringent than promulgated effluent limitations guidelines or standards under sections 301, 304, 306, 307, 318 and 405 of CWA necessary to:

(1) Achieve water quality standards established under section 303 of the CWA, including State narrative criteria for water quality.

(i) Limitations must control all pollutants or pollutant parameters (either conventional, nonconventional, or toxic pollutants) which the Director determines are or may be discharged at a level which will cause, have the reasonable potential to cause, or contribute to an excursion above any State water quality standard, including State narrative criteria for water quality.

(ii) When determining whether a discharge causes, has the reasonable potential to cause, or contributes to an in-stream excursion above a narrative or numeric criteria within a State water quality standard, the permitting authority shall use procedures which account for existing controls on point and nonpoint sources of pollution, the variability of the pollutant or pollutant parameter in the effluent, the sensitivity of the species to toxicity testing (when evaluating whole effluent toxicity), and where appropriate, the dilution of the effluent in the receiving water.

(iii) When the permitting authority determines, using the procedures in

paragraph (d)(1)(ii) of this section, that a discharge causes, has the reasonable potential to cause, or contributes to an in-stream excursion above the allowable ambient concentration of a State numeric criteria within a State water quality standard for an individual pollutant, the permit must contain effluent limits for that pollutant.

(iv) When the permitting authority determines, using the procedures in paragraph (d)(1)(ii) of this section, that a discharge causes, has the reasonable potential to cause, or contributes to an in-stream excursion above the numeric criterion for whole effluent toxicity, the permit must contain effluent limits for whole effluent toxicity.

(v) Except as provided in this subparagraph, when the permitting authority determines, using the procedures in paragraph (d)(1)(ii) of this section, toxicity testing data, or other information, that a discharge causes, has the reasonable potential to cause, or contributes to an in-stream excursion above a narrative criterion within an applicable State water quality standard, the permit must contain effluent limits for whole effluent toxicity. Limits on whole effluent toxicity are not necessary where the permitting authority demonstrates in the fact sheet or statement of basis of the NPDES permit, using the procedures in paragraph (d)(1)(ii) of this section, that chemical-specific limits for the effluent are sufficient to attain and maintain applicable numeric and narrative State water quality standards.

(vi) Where a State has not established a water quality criterion for a specific chemical pollutant that is present in an effluent at a concentration that causes, has the reasonable potential to cause, or contributes to an excursion above a narrative criterion within an applicable State water quality standard, the permitting authority must establish effluent limits using one or more of the following options:

(A) Establish effluent limits using a calculated numeric water quality criterion for the pollutant which the permitting authority demonstrates will attain and maintain applicable narrative water quality criteria and will fully protect the designated use. Such a criterion may be derived using a proposed State criterion, or an explicit State policy or regulation interpreting its narrative water quality criterion, supplemented with other relevant information which may include: EPA's Water Quality Standards Handbook, October 1983, risk assessment data, exposure data, information about the pollutant from the Food and Drug Administration, and current EPA criteria documents; or

(B) Establish effluent limits on a case-by-case basis, using EPA's water quality criteria, published under section 304(a) of the CWA, supplemented where necessary by other relevant information; or

(C) Establish effluent limitations on an indicator parameter for the pollutant of concern, provided:

(*1*) The permit identifies which pollutants are intended to be controlled by the use of the effluent limitation;

(*2*) The fact sheet required by § 124.56 sets forth the basis for the limit, including a finding that compliance with the effluent limit on the indicator parameter will result in controls on the pollutant of concern which are sufficient to attain and maintain applicable water quality standards;

(*3*) The permit requires all effluent and ambient monitoring necessary to show that during the term of the permit the limit on the indicator parameter continues to attain and maintain applicable water quality standards; and

(*4*) The permit contains a reopener clause allowing the permitting authority to modify or revoke and reissue the permit if the limits on the indicator parameter no longer attain and maintain applicable water quality standards.

(vii) When developing water quality-based effluent limits under this paragraph the permitting authority shall ensure that:

(A) The level of water quality to be achieved by limits on point sources established under this paragraph is derived from, and complies with all applicable water quality standards; and

(B) Effluent limits developed to protect a narrative water quality criterion, a numeric water quality criterion, or both, are consistent with the assumptions and requirements of any available wasteload allocation for the

discharge prepared by the State and approved by EPA pursuant to 40 CFR 130.7.

(2) Attain or maintain a specified water quality through water quality related effluent limits established under section 302 of CWA;

(3) Conform to the conditions to a State certification under section 401 of the CWA that meets the requirements of § 124.53 when EPA is the permitting authority. If a State certification is stayed by a court of competent jurisdiction or an appropriate State board or agency, EPA shall notify the State that the Agency will deem certification waived unless a finally effective State certification is received within sixty days from the date of the notice. If the State does not forward a finally effective certification within the sixty day period, EPA shall include conditions in the permit that may be necessary to meet EPA's obligation under section 301(b)(1)(C) of the CWA;

(4) Conform to applicable water quality requirements under section 401(a)(2) of CWA when the discharge affects a State other than the certifying State;

(5) Incorporate any more stringent limitations, treatment standards, or schedule of compliance requirements established under Federal or State law or regulations in accordance with section 301(b)(1)(C) of CWA;

(6) Ensure consistency with the requirements of a Water Quality Management plan approved by EPA under section 208(b) of CWA;

(7) Incorporate section 403(c) criteria under part 125, subpart M, for ocean discharges;

(8) Incorporate alternative effluent limitations or standards where warranted by ''fundamentally different factors,'' under 40 CFR part 125, subpart D;

(9) Incorporate any other appropriate requirements, conditions, or limitations (other than effluent limitations) into a new source permit to the extent allowed by the National Environmental Policy Act, 42 U.S.C. 4321 *et seq.* and section 511 of the CWA, when EPA is the permit issuing authority. (See § 122.29(c)).

(e) *Technology-based controls for toxic pollutants.* Limitations established under paragraphs (a), (b), or (d) of this section, to control pollutants meeting the criteria listed in paragraph (e)(1) of this section. Limitations will be established in accordance with paragraph (e)(2) of this section. An explanation of the development of these limitations shall be included in the fact sheet under § 124.56(b)(1)(i).

(1) Limitations must control all toxic pollutants which the Director determines (based on information reported in a permit application under § 122.21(g)(7) or (10) or in a notification under § 122.42(a)(1) or on other information) are or may be discharged at a level greater than the level which can be achieved by the technology-based treatment requirements appropriate to the permittee under § 125.3(c); or

(2) The requirement that the limitations control the pollutants meeting the criteria of paragraph (e)(1) of this section will be satisfied by:

(i) Limitations on those pollutants; or

(ii) Limitations on other pollutants which, in the judgment of the Director, will provide treatment of the pollutants under paragraph (e)(1) of this section to the levels required by § 125.3(c).

(f) *Notification level.* A ''notification level'' which exceeds the notification level of § 122.42(a)(1)(i), (ii) or (iii), upon a petition from the permittee or on the Director's initiative. This new notification level may not exceed the level which can be achieved by the technology-based treatment requirements appropriate to the permittee under § 125.3(c)

(g) *Twenty-four hour reporting.* Pollutants for which the permittee must report violations of maximum daily discharge limitations under § 122.41(1)(6)(ii)(C) (24-hour reporting) shall be listed in the permit. This list shall include any toxic pollutant or hazardous substance, or any pollutant specifically identified as the method to control a toxic pollutant or hazardous substance.

(h) *Durations* for permits, as set forth in § 122.46.

(i) *Monitoring requirements.* In addition to § 122.48, the following monitoring requirements:

(1) To assure compliance with permit limitations, requirements to monitor:

(i) The mass (or other measurement specified in the permit) for each pollutant limited in the permit;

(ii) The volume of effluent discharged from each outfall;

(iii) Other measurements as appropriate including pollutants in internal waste streams under § 122.45(i); pollutants in intake water for net limitations under § 122.45(f); frequency, rate of discharge, etc., for noncontinuous discharges under § 122.45(e); pollutants subject to notification requirements under § 122.42(a); and pollutants in sewage sludge or other monitoring as specified in 40 CFR part 503; or as determined to be necessary on a case-by-case basis pursuant to section 405(d)(4) of the CWA.

(iv) According to test procedures approved under 40 CFR part 136 for the analyses of pollutants having approved methods under that part, and according to a test procedure specified in the permit for pollutants with no approved methods.

(2) Except as provided in paragraphs (i)(4) and (i)(5) of this section, requirements to report monitoring results shall be established on a case-by-case basis with a frequency dependent on the nature and effect of the discharge, but in no case less than once a year. For sewage sludge use or disposal practices, requirements to monitor and report results shall be established on a case-by-case basis with a frequency dependent on the nature and effect of the sewage sludge use or disposal practice; minimally this shall be as specified in 40 CFR part 503 (where applicable), but in no case less than once a year.

(3) Requirements to report monitoring results for storm water discharges associated with industrial activity which are subject to an effluent limitation guideline shall be established on a case-by-case basis with a frequency dependent on the nature and effect of the discharge, but in no case less than once a year.

(4) Requirements to report monitoring results for storm water discharges associated with industrial activity (other than those addressed in paragraph (i)(3) of this section) shall be established on a case-by-case basis with a frequency dependent on the nature and effect of the discharge. At a minimum, a permit for such a discharge must require:

(i) The discharger to conduct an annual inspection of the facility site to identify areas contributing to a storm water discharge associated with industrial activity and evaluate whether measures to reduce pollutant loadings identified in a storm water pollution prevention plan are adequate and properly implemented in accordance with the terms of the permit or whether additional control measures are needed;

(ii) The discharger to maintain for a period of three years a record summarizing the results of the inspection and a certification that the facility is in compliance with the plan and the permit, and identifying any incidents of non-compliance;

(iii) Such report and certification be signed in accordance with § 122.22; and

(iv) Permits for storm water discharges associated with industrial activity from inactive mining operations may, where annual inspections are impracticable, require certification once every three years by a Registered Professional Engineer that the facility is in compliance with the permit, or alternative requirements.

(5) Permits which do not require the submittal of monitoring result reports at least annually shall require that the permittee report all instances of noncompliance not reported under § 122.41(l) (1), (4), (5), and (6) at least annually.

(j) *Pretreatment program for POTWs.* Requirements for POTWs to:

(1) Identify, in terms of character and volume of pollutants, any significant indirect dischargers into the POTW subject to pretreatment standards under section 307(b) of CWA and 40 CFR part 403.

(2) Submit a local program when required by and in accordance with 40 CFR part 403 to assure compliance with pretreatment standards to the extent applicable under section 307(b). The local program shall be incorporated into the permit as described in 40 CFR part 403. The program shall require all indirect dischargers to the POTW to comply with the reporting requirements of 40 CFR part 403.

(3) For POTWs which are ''sludge-only facilities,'' a requirement to develop a pretreatment program under 40 CFR part 403 when the Director determines that a pretreatment program is necessary to assure compliance with Section 405(d) of the CWA.

(k) *Best management practices* to control or abate the discharge of pollutants when:

(1) Authorized under section 304(e) of CWA for the control of toxic pollutants and hazardous substances from ancillary industrial activities;

(2) Numeric effluent limitations are infeasible, or

(3) The practices are reasonably necessary to achieve effluent limitations and standards or to carry out the purposes and intent of CWA.

(l) *Reissued permits.* (1) Except as provided in paragraph (l)(2) of this section when a permit is renewed or reissued, interim effluent limitations, standards or conditions must be at least as stringent as the final effluent limitations, standards, or conditions in the previous permit (unless the circumstances on which the previous permit was based have materially and substantially changed since the time the permit was issued and would constitute cause for permit modification or revocation and reissuance under § 122.62.)

(2) In the case of effluent limitations established on the basis of Section 402(a)(1)(B) of the CWA, a permit may not be renewed, reissued, or modified on the basis of effluent guidelines promulgated under section 304(b) subsequent to the original issuance of such permit, to contain effluent limitations which are less stringent than the comparable effluent limitations in the previous permit.

(i) Exceptions—A permit with respect to which paragraph (l)(2) of this section applies may be renewed, reissued, or modified to contain a less stringent effluent limitation applicable to a pollutant, if—

(A) Material and substantial alterations or additions to the permitted facility occurred after permit issuance which justify the application of a less stringent effluent limitation;

(B)(*1*) Information is available which was not available at the time of permit issuance (other than revised regulations, guidance, or test methods) and which would have justified the application of a less stringent effluent limitation at the time of permit issuance; or

(*2*) The Administrator determines that technical mistakes or mistaken interpretations of law were made in issuing the permit under section 402(a)(1)(b);

(C) A less stringent effluent limitation is necessary because of events over which the permittee has no control and for which there is no reasonably available remedy;

(D) The permittee has received a permit modification under section 301(c), 301(g), 301(h), 301(i), 301(k), 301(n), or 316(a); or

(E) The permittee has installed the treatment facilities required to meet the effluent limitations in the previous permit and has properly operated and maintained the facilities but has nevertheless been unable to achieve the previous effluent limitations, in which case the limitations in the reviewed, reissued, or modified permit may reflect the level of pollutant control actually achieved (but shall not be less stringent than required by effluent guidelines in effect at the time of permit renewal, reissuance, or modification).

(ii) *Limitations.* In no event may a permit with respect to which paragraph (l)(2) of this section applies be renewed, reissued, or modified to contain an effluent limitation which is less stringent than required by effluent guidelines in effect at the time the permit is renewed, reissued, or modified. In no event may such a permit to discharge into waters be renewed, issued, or modified to contain a less stringent effluent limitation if the implementation of such limitation would result in a violation of a water quality standard under section 303 applicable to such waters.

(m) *Privately owned treatment works.* For a privately owned treatment works, any conditions expressly applicable to any user, as a limited co-permittee, that may be necessary in the permit issued to the treatment works to ensure compliance with applicable requirements under this part. Alternatively, the Director may issue separate permits to the treatment works

and to its users, or may require a separate permit application from any user. The Director's decision to issue a permit with no conditions applicable to any user, to impose conditions on one or more users, to issue separate permits, or to require separate applications, and the basis for that decision, shall be stated in the fact sheet for the draft permit for the treatment works.

(n) *Grants.* Any conditions imposed in grants made by the Administrator to POTWs under sections 201 and 204 of CWA which are reasonably necessary for the achievement of effluent limitations under section 301 of CWA.

(o) *Sewage sludge.* Requirements under section 405 of CWA governing the disposal of sewage sludge from publicly owned treatment works or any other treatment works treating domestic sewage for any use for which regulations have been established, in accordance with any applicable regulations.

(p) *Coast Guard.* When a permit is issued to a facility that may operate at certain times as a means of transportation over water, a condition that the discharge shall comply with any applicable regulations promulgated by the Secretary of the department in which the Coast Guard is operating, that establish specifications for safe transportation, handling, carriage, and storage of pollutants.

(q) *Navigation.* Any conditions that the Secretary of the Army considers necessary to ensure that navigation and anchorage will not be substantially impaired, in accordance with § 124.58.

(r) *Great Lakes.* When a permit is issued to a facility that discharges into the Great Lakes System (as defined in 40 CFR 132.2), conditions promulgated by the State, Tribe, or EPA pursuant to 40 CFR part 132.

[48 FR 14153, Apr. 1, 1983, as amended at 49 FR 31842, Aug. 8, 1984; 49 FR 38049, Sept. 26, 1984; 50 FR 6940, Feb. 19, 1985; 50 FR 7912, Feb. 27, 1985; 54 FR 256, Jan. 4, 1989; 54 FR 18783, May 2, 1989; 54 FR 23895, June 2, 1989; 57 FR 11413, Apr. 2, 1992; 57 FR 33049, July 24, 1992; 60 FR 15386, Mar. 23, 1995]

§ 122.45 Calculating NPDES permit conditions (applicable to State NPDES programs, see § 123.25).

(a) *Outfalls and discharge points.* All permit effluent limitations, standards and prohibitions shall be established for each outfall or discharge point of the permitted facility, except as otherwise provided under § 122.44(k) (BMPs where limitations are infeasible) and paragraph (i) of this section (limitations on internal waste streams).

(b) *Production-based limitations.* (1) In the case of POTWs, permit effluent limitations, standards, or prohibitions shall be calculated based on design flow.

(2)(i) Except in the case of POTWs or as provided in paragraph (b)(2)(ii) of this section, calculation of any permit limitations, standards, or prohibitions which are based on production (or other measure of operation) shall be based not upon the designed production capacity but rather upon a reasonable measure of actual production of the facility. For new sources or new dischargers, actual production shall be estimated using projected production. The time period of the measure of production shall correspond to the time period of the calculated permit limitations; for example, monthly production shall be used to calculate average monthly discharge limitations.

(ii)(A)(*1*) The Director may include a condition establishing alternate permit limitations, standards, or prohibitions based upon anticipated increased (not to exceed maximum production capability) or decreased production levels.

(*2*) *For the automotive manufacturing industry* only, the Regional Administrator shall, and the State Director may establish a condition under paragraph (b)(2)(ii)(A)(*1*) of this section if the applicant satisfactorily demonstrates to the Director at the time the application is submitted that its actual production, as indicated in paragraph (b)(2)(i) of this section, is substantially below maximum production capability and that there is a reasonable potential for an increase above actual production during the duration of the permit.

(B) If the Director establishes permit conditions under paragraph (b)(2)(ii)(A) of this section:

(*1*) The permit shall require the permittee to notify the Director at least two business days prior to a month in which the permittee expects to operate at a level higher than the lowest production level identified in the permit.

The notice shall specify the anticipated level and the period during which the permittee expects to operate at the alternate level. If the notice covers more than one month, the notice shall specify the reasons for the anticipated production level increase. New notice of discharge at alternate levels is required to cover a period or production level not covered by prior notice or, if during two consecutive months otherwise covered by a notice, the production level at the permitted facility does not in fact meet the higher level designated in the notice.

(*2*) The permittee shall comply with the limitations, standards, or prohibitions that correspond to the lowest level of production specified in the permit, unless the permittee has notified the Director under paragraph (b)(2)(ii)(B)(*1*) of this section, in which case the permittee shall comply with the lower of the actual level of production during each month or the level specified in the notice.

(*3*) The permittee shall submit with the DMR the level of production that actually occurred during each month and the limitations, standards, or prohibitions applicable to that level of production.

(c) *Metals.* All permit effluent limitations, standards, or prohibitions for a metal shall be expressed in terms of ''total recoverable metal'' as defined in 40 CFR part 136 unless:

(1) An applicable effluent standard or limitation has been promulgated under the CWA and specifies the limitation for the metal in the dissolved or valent or total form; or

(2) In establishing permit limitations on a case-by-case basis under § 125.3, it is necessary to express the limitation on the metal in the dissolved or valent or total form to carry out the provisions of the CWA; or

(3) All approved analytical methods for the metal inherently measure only its dissolved form (*e.g.,* hexavalent chromium).

(d) *Continuous discharges.* For continuous discharges all permit effluent limitations, standards, and prohibitions, including those necessary to achieve water quality standards, shall unless impracticable be stated as:

(1) Maximum daily and average monthly discharge limitations for all dischargers other than publicly owned treatment works; and

(2) Average weekly and average monthly discharge limitations for POTWs.

(e) *Non-continuous discharges.* Discharges which are not continuous, as defined in § 122.2, shall be particularly described and limited, considering the following factors, as appropriate:

(1) Frequency (for example, a batch discharge shall not occur more than once every 3 weeks);

(2) Total mass (for example, not to exceed 100 kilograms of zinc and 200 kilograms of chromium per batch discharge);

(3) Maximum rate of discharge of pollutants during the discharge (for example, not to exceed 2 kilograms of zinc per minute); and

(4) Prohibition or limitation of specified pollutants by mass, concentration, or other appropriate measure (for example, shall not contain at any time more than 0.1 mg/1 zinc or more than 250 grams (¼ kilogram) of zinc in any discharge).

(f) *Mass limitations.* (1) All pollutants limited in permits shall have limitations, standards or prohibitions expressed in terms of mass except:

(i) For pH, temperature, radiation, or other pollutants which cannot appropriately be expressed by mass;

(ii) When applicable standards and limitations are expressed in terms of other units of measurement; or

(iii) If in establishing permit limitations on a case-by-case basis under § 125.3, limitations expressed in terms of mass are infeasible because the mass of the pollutant discharged cannot be related to a measure of operation (for example, discharges of TSS from certain mining operations), and permit conditions ensure that dilution will not be used as a substitute for treatment.

(2) Pollutants limited in terms of mass additionally may be limited in terms of other units of measurement, and the permit shall require the permittee to comply with both limitations.

(g) *Pollutants in intake water.* (1) Upon request of the discharger, technology-based effluent limitations or standards

shall be adjusted to reflect credit for pollutants in the discharger's intake water if:

(i) The applicable effluent limitations and standards contained in 40 CFR subchapter N specifically provide that they shall be applied on a net basis; or

(ii) The discharger demonstrates that the control system it proposes or uses to meet applicable technology-based limitations and standards would, if properly installed and operated, meet the limitations and standards in the absence of pollutants in the intake waters.

(2) Credit for generic pollutants such as biochemical oxygen demand (BOD) or total suspended solids (TSS) should not be granted unless the permittee demonstrates that the constituents of the generic measure in the effluent are substantially similar to the constituents of the generic measure in the intake water or unless appropriate additional limits are placed on process water pollutants either at the outfall or elsewhere.

(3) Credit shall be granted only to the extent necessary to meet the applicable limitation or standard, up to a maximum value equal to the influent value. Additional monitoring may be necessary to determine eligibility for credits and compliance with permit limits.

(4) Credit shall be granted only if the discharger demonstrates that the intake water is drawn from the same body of water into which the discharge is made. The Director may waive this requirement if he finds that no environmental degradation will result.

(5) This section does not apply to the discharge of raw water clarifier sludge generated from the treatment of intake water.

(h) *Internal waste streams.* (1) When permit effluent limitations or standards imposed at the point of discharge are impractical or infeasible, effluent limitations or standards for discharges of pollutants may be imposed on internal waste streams before mixing with other waste streams or cooling water streams. In those instances, the monitoring required by § 122.44(i) shall also be applied to the internal waste streams.

(2) Limits on internal waste streams will be imposed only when the fact sheet under § 124.56 sets forth the exceptional circumstances which make such limitations necessary, such as when the final discharge point is inaccessible (for example, under 10 meters of water), the wastes at the point of discharge are so diluted as to make monitoring impracticable, or the interferences among pollutants at the point of discharge would make detection or analysis impracticable.

(i) *Disposal of pollutants into wells, into POTWs or by land application.* Permit limitations and standards shall be calculated as provided in § 122.50.

[48 FR 14153, Apr. 1, 1983, as amended at 49 FR 38049, Sept. 26, 1984; 50 FR 4514, Jan. 31, 1985; 54 FR 258, Jan. 4, 1989; 54 FR 18784, May 2, 1989]

§ 122.46 Duration of permits (applicable to State programs, see § 123.25).

(a) NPDES permits shall be effective for a fixed term not to exceed 5 years.

(b) Except as provided in § 122.6, the term of a permit shall not be extended by modification beyond the maximum duration specified in this section.

(c) The Director may issue any permit for a duration that is less than the full allowable term under this section.

(d) A permit may be issued to expire on or after the statutory deadline set forth in section 301(b)(2) (A), (C), and (E), if the permit includes effluent limitations to meet the requirements of section 301(b)(2) (A), (C), (D), (E) and (F), whether or not applicable effluent limitations guidelines have been promulgated or approved.

(e) A determination that a particular discharger falls within a given industrial category for purposes of setting a permit expiration date under paragraph (d) of this section is not conclusive as to the discharger's inclusion in that industrial category for any other purposes, and does not prejudice any rights to challenge or change that inclusion at the time that a permit based on that determination is formulated.

[48 FR 14153, Apr. 1, 1983, as amended at 49 FR 31842, Aug. 8, 1984; 50 FR 6940, Feb. 19, 1985; 60 FR 33931, June 29, 1995]

§ 122.47 Schedules of compliance.

(a) *General (applicable to State programs, see § 123.25).* The permit may, when appropriate, specify a schedule of compliance leading to compliance with CWA and regulations.

(1) *Time for compliance.* Any schedules of compliance under this section shall require compliance as soon as possible, but not later than the applicable statutory deadline under the CWA.

(2) The first NPDES permit issued to a new source or a new discharger shall contain a schedule of compliance only when necessary to allow a reasonable opportunity to attain compliance with requirements issued or revised after commencement of construction but less than three years before commencement of the relevant discharge. For recommencing dischargers, a schedule of compliance shall be available only when necessary to allow a reasonable opportunity to attain compliance with requirements issued or revised less than three years before recommencement of discharge.

(3) *Interim dates.* Except as provided in paragraph (b)(1)(ii) of this section, if a permit establishes a schedule of compliance which exceeds 1 year from the date of permit issuance, the schedule shall set forth interim requirements and the dates for their achievement.

(i) The time between interim dates shall not exceed 1 year, except that in the case of a schedule for compliance with standards for sewage sludge use and disposal, the time between interim dates shall not exceed six months.

(ii) If the time necessary for completion of any interim requirement (such as the construction of a control facility) is more than 1 year and is not readily divisible into stages for completion, the permit shall specify interim dates for the submission of reports of progress toward completion of the interim requirements and indicate a projected completion date.

NOTE: Examples of interim requirements include: (a) Submit a complete Step 1 construction grant (for POTWs); (b) let a contract for construction of required facilities; (c) commence construction of required facilities; (d) complete construction of required facilities.

(4) *Reporting.* The permit shall be written to require that no later than 14 days following each interim date and the final date of compliance, the permittee shall notify the Director in writing of its compliance or non-compliance with the interim or final requirements, or submit progress reports if paragraph (a)(3)(ii) is applicable.

(b) *Alternative schedules of compliance.* An NPDES permit applicant or permittee may cease conducting regulated activities (by terminating of direct discharge for NPDES sources) rather than continuing to operate and meet permit requriements as follows:

(1) If the permittee decides to cease conducting regulated activities at a given time within the term of a permit which has already been issued:

(i) The permit may be modified to contain a new or additional schedule leading to timely cessation of activities; or

(ii) The permittee shall cease conducting permitted activities before non-compliance with any interim or final compliance schedule requirement already specified in the permit.

(2) If the decision to cease conducting regulated activities is made before issuance of a permit whose term will include the termination date, the permit shall contain a schedule leading to termination which will ensure timely compliance with applicable requirements no later than the statutory deadline.

(3) If the permittee is undecided whether to cease conducting regulated activities, the Director may issue or modify a permit to contain two schedules as follows:

(i) Both schedules shall contain an identical interim deadline requiring a final decision on whether to cease conducting regulated activities no later than a date which ensures sufficient time to comply with applicable requirements in a timely manner if the decision is to continue conducting regulated activities;

(ii) One schedule shall lead to timely compliance with applicable requirements, no later than the statutory deadline;

(iii) The second schedule shall lead to cessation of regulated activities by a

date which will ensure timely compliance with applicable requirements no later than the statutory deadline.

(iv) Each permit containing two schedules shall include a requirement that after the permittee has made a final decision under paragraph (b)(3)(i) of this section it shall follow the schedule leading to compliance if the decision is to continue conducting regulated activities, and follow the schedule leading to termination if the decision is to cease conducting regulated activities.

(4) The applicant's or permittee's decision to cease conducting regulated activities shall be evidenced by a firm public commitment satisfactory to the Director, such as a resolution of the board of directors of a corporation.

[48 FR 14153, Apr. 1, 1983, as amended at 49 FR 38050, Sept. 26, 1984; 50 FR 6940, Feb. 19, 1985; 54 FR 18784, May 2, 1989]

§ 122.48 Requirements for recording and reporting of monitoring results (applicable to State programs, see § 123.25).

All permits shall specify:

(a) Requirements concerning the proper use, maintenance, and installation, when appropriate, of monitoring equipment or methods (including biological monitoring methods when appropriate);

(b) Required monitoring including type, intervals, and frequency sufficient to yield data which are representative of the monitored activity including, when appropriate, continuous monitoring;

(c) Applicable reporting requirements based upon the impact of the regulated activity and as specified in § 122.44. Reporting shall be no less frequent than specified in the above regulation.

[48 FR 14153, Apr. 1, 1983; 50 FR 6940, Feb. 19, 1985]

§ 122.49 Considerations under Federal law.

The following is a list of Federal laws that may apply to the issuance of permits under these rules. When any of these laws is applicable, its procedures must be followed. When the applicable law requires consideration or adoption of particular permit conditions or requires the denial of a permit, those requirements also must be followed.

(a) The *Wild and Scenic Rivers Act,* 16 U.S.C. 1273 *et seq.* section 7 of the Act prohibits the Regional Administrator from assisting by license or otherwise the construction of any water resources project that would have a direct, adverse effect on the values for which a national wild and scenic river was established.

(b) The *National Historic Preservation Act of 1966,* 16 U.S.C. 470 *et seq.* section 106 of the Act and implementing regulations (36 CFR part 800) require the Regional Administrator, before issuing a license, to adopt measures when feasible to mitigate potential adverse effects of the licensed activity and properties listed or eligible for listing in the National Register of Historic Places. The Act's requirements are to be implemented in cooperation with State Historic Preservation Officers and upon notice to, and when appropriate, in consultation with the Advisory Council on Historic Preservation.

(c) The *Endangered Species Act,* 16 U.S.C. 1531 *et seq.* section 7 of the Act and implementing regulations (50 CFR part 402) require the Regional Administrator to ensure, in consultation with the Secretary of the Interior or Commerce, that any action authorized by EPA is not likely to jeopardize the continued existence of any endangered or threatened species or adversely affect its critical habitat.

(d) The *Coastal Zone Management Act,* 16 U.S.C. 1451 *et seq.* section 307(c) of the Act and implementing regulations (15 CFR part 930) prohibit EPA from issuing a permit for an activity affecting land or water use in the coastal zone until the applicant certifies that the proposed activity complies with the State Coastal Zone Management program, and the State or its designated agency concurs with the certification (or the Secretary of Commerce overrides the State's nonconcurrence).

(e) The *Fish and Wildlife Coordination Act,* 16 U.S.C. 661 *et seq.,* requires that the Regional Administrator, before issuing a permit proposing or authorizing the impoundment (with certain exemptions), diversion, or other control or modification of any body of water, consult with the appropriate State

agency exercising jurisdiction over wildlife resources to conserve those resources.

(f) *Executive orders.* [Reserved]

(g) The National Environmental Policy Act, 42 U.S.C. 4321 *et seq.*, may require preparation of an Environmental Impact Statement and consideration of EIS-related permit conditions (other than effluent limitations) as provided in § 122.29(c).

(Clean Water Act (33 U.S.C. 1251 *et seq.*), Safe Drinking Water Act (42 U.S.C. 300f *et seq.*), Clean Air Act (42 U.S.C. 7401 *et seq.*), Resource Conservation and Recovery Act (42 U.S.C. 6901 *et seq.*))

[48 FR 14153, Apr. 1, 1983, as amended at 48 FR 39620, Sept. 1, 1983; 49 FR 38050, Sept. 26, 1984]

§ 122.50 Disposal of pollutants into wells, into publicly owned treatment works or by land application (applicable to State NPDES programs, see § 123.25).

(a) When part of a discharger's process wastewater is not being discharged into waters of the United States or contiguous zone because it is disposed into a well, into a POTW, or by land application thereby reducing the flow or level of pollutants being discharged into waters of the United States, applicable effluent standards and limitations for the discharge in an NPDES permit shall be adjusted to reflect the reduced raw waste resulting from such disposal. Effluent limitations and standards in the permit shall be calculated by one of the following methods:

(1) If none of the waste from a particular process is discharged into waters of the United States, and effluent limitations guidelines provide separate allocation for wastes from that process, all allocations for the process shall be eliminated from calculation of permit effluent limitations or standards.

(2) In all cases other than those described in paragraph (a)(1) of this section, effluent limitations shall be adjusted by multiplying the effluent limitation derived by applying effluent limitation guidelines to the total waste stream by the amount of wastewater flow to be treated and discharged into waters of the United States, and dividing the result by the total wastewater flow. Effluent limitations and standards so calculated may be further adjusted under part 125, subpart D to make them more or less stringent if discharges to wells, publicly owned treatment works, or by land application change the character or treatability of the pollutants being discharged to receiving waters. This method may be algebraically expressed as:

$$P = \frac{E \times N}{T}$$

where P is the permit effluent limitation, E is the limitation derived by applying effluent guidelines to the total wastestream, N is the wastewater flow to be treated and discharged to waters of the United States, and T is the total wastewater flow.

(b) Paragraph (a) of this section does not apply to the extent that promulgated effluent limitations guidelines:

(1) Control concentrations of pollutants discharged but not mass; or

(2) Specify a different specific technique for adjusting effluent limitations to account for well injection, land application, or disposal into POTWs.

(c) Paragraph (a) of this section does not alter a discharger's obligation to meet any more stringent requirements established under §§ 122.41, 122.42, 122.43, and 122.44.

[48 FR 14153, Apr. 1, 1983, as amended at 49 FR 38050, Sept. 26, 1984]

Subpart D—Transfer, Modification, Revocation and Reissuance, and Termination of Permits

§ 122.61 Transfer of permits (applicable to State programs, see § 123.25).

(a) *Transfers by modification.* Except as provided in paragraph (b) of this section, a permit may be transferred by the permittee to a new owner or operator only if the permit has been modified or revoked and reissued (under § 122.62(b)(2)), or a minor modification made (under § 122.63(d)), to identify the new permittee and incorporate such other requirements as may be necessary under CWA.

(b) *Automatic transfers.* As an alternative to transfers under paragraph (a) of this section, any NPDES permit may be automatically transferred to a new permittee if:

(1) The current permittee notifies the Director at least 30 days in advance of the proposed transfer date in paragraph (b)(2) of this section;

(2) The notice includes a written agreement between the existing and new permittees containing a specific date for transfer of permit responsibility, coverage, and liability between them; and

(3) The Director does not notify the existing permittee and the proposed new permittee of his or her intent to modify or revoke and reissue the permit. A modification under this subparagraph may also be a minor modification under § 122.63. If this notice is not received, the transfer is effective on the date specified in the agreement mentioned in paragraph (b)(2) of this section.

§ 122.62 Modification or revocation and reissuance of permits (applicable to State programs, see § 123.25).

When the Director receives any information (for example, inspects the facility, receives information submitted by the permittee as required in the permit (see § 122.41), receives a request for modification or revocation and reissuance under § 124.5, or conducts a review of the permit file) he or she may determine whether or not one or more of the causes listed in paragraphs (a) and (b) of this section for modification or revocation and reissuance or both exist. If cause exists, the Director may modify or revoke and reissue the permit accordingly, subject to the limitations of § 124.5(c), and may request an updated application if necessary. When a permit is modified, only the conditions subject to modification are reopened. If a permit is revoked and reissued, the entire permit is reopened and subject to revision and the permit is reissued for a new term. See § 124.5(c)(2). If cause does not exist under this section or § 122.63, the Director shall not modify or revoke and reissue the permit. If a permit modification satisfies the criteria in § 122.63 for ''minor modifications'' the permit may be modified without a draft permit or public review. Otherwise, a draft permit must be prepared and other procedures in part 124 (or procedures of an approved State program) followed.

(a) *Causes for modification.* The following are causes for modification but not revocation and reissuance of permits except when the permittee requests or agrees.

(1) *Alterations.* There are material and substantial alterations or additions to the permitted facility or activity (including a change or changes in the permittee's sludge use or disposal practice) which occurred after permit issuance which justify the application of permit conditions that are different or absent in the existing permit.

NOTE: Certain reconstruction activities may cause the new source provisions of § 122.29 to be applicable.

(2) *Information.* The Director has received new information. Permits may be modified during their terms for this cause only if the information was not available at the time of permit issuance (other than revised regulations, guidance, or test methods) and would have justified the application of different permit conditions at the time of issuance. For NPDES general permits (§ 122.28) this cause includes any information indicating that cumulative effects on the environment are unacceptable. For new source or new discharger NPDES permits §§ 122.21, 122.29), this cause shall include any significant information derived from effluent testing required under § 122.21(k)(5)(vi) or § 122.21(h)(4)(iii) after issuance of the permit.

(3) *New regulations.* The standards or regulations on which the permit was based have been changed by promulgation of amended standards or regulations or by judicial decision after the permit was issued. Permits may be modified during their terms for this cause only as follows:

(i) For promulgation of amended standards or regulations, when:

(A) The permit condition requested to be modified was based on a promulgated effluent limitation guideline, EPA approved or promulgated water quality standards, or the Secondary Treatment Regulations under part 133; and

(B) EPA has revised, withdrawn, or modified that portion of the regulation or effluent limitation guideline on which the permit condition was based, or has approved a State action with regard to a water quality standard on which the permit condition was based; and

(C) A permittee requests modification in accordance with § 124.5 within ninety (90) days after FEDERAL REGISTER notice of the action on which the request is based.

(ii) For judicial decisions, a court of competent jurisdiction has remanded and stayed EPA promulgated regulations or effluent limitation guidelines, if the remand and stay concern that portion of the regulations or guidelines on which the permit condition was based and a request is filed by the permittee in accordance with § 124.5 within ninety (90) days of judicial remand.

(iii) For changes based upon modified State certifications of NPDES permits, see § 124.55(b).

(4) *Compliance schedules.* The Director determines good cause exists for modification of a compliance schedule, such as an act of God, strike, flood, or materials shortage or other events over which the permittee has little or no control and for which there is no reasonably available remedy. However, in no case may an NPDES compliance schedule be modified to extend beyond an applicable CWA statutory deadline. See also § 122.63(c) (minor modifications) and paragraph (a)(14) of this section (NPDES innovative technology).

(5) When the permittee has filed a request for a variance under CWA section 301(c), 301(g), 301(h), 301(i), 301(k), or 316(a) or for ''fundamentally different factors'' within the time specified in § 122.21 or § 125.27(a).

(6) *307(a) toxics.* When required to incorporate an applicable 307(a) toxic effluent standard or prohibition (see § 122.44(b)).

(7) *Reopener.* When required by the ''reopener'' conditions in a permit, which are established in the permit under § 122.44(b) (for CWA toxic effluent limitations and standards for sewage sludge use or disposal, see also § 122.44(c)) or 40 CFR § 403.10(e) (pretreatment program).

(8)(i) *Net limits.* Upon request of a permittee who qualifies for effluent limitations on a net basis under § 122.45(h).

(ii) When a discharger is no longer eligible for net limitations, as provided in § 122.45(h)(1)(ii)(B).

(9) *Pretreatment.* As necessary under 40 CFR 403.8(e) (compliance schedule for development of pretreatment program).

(10) *Failure to notify.* Upon failure of an approved State to notify, as required by section 402(b)(3), another State whose waters may be affected by a discharge from the approved State.

(11) *Non-limited pollutants.* When the level of discharge of any pollutant which is not limited in the permit exceeds the level which can be achieved by the technology-based treatment requirements appropriate to the permittee under § 125.3(c).

(12) *Notification levels.* To establish a ''notification level'' as provided in § 122.44(f).

(13) *Compliance schedules.* To modify a schedule of compliance to reflect the time lost during construction of an innovative or alternative facility, in the case of a POTW which has received a grant under section 202(a)(3) of CWA for 100% of the costs to modify or replace facilities constructed with a grant for innovative and alternative wastewater technology under section 202(a)(2). In no case shall the compliance schedule be modified to extend beyond an applicable CWA statutory deadline for compliance.

(14) [Reserved]

(15) To correct technical mistakes, such as errors in calculation, or mistaken interpretations of law made in determining permit conditions.

(16) When the discharger has installed the treatment technology considered by the permit writer in setting effluent limitations imposed under section 402(a)(1) of the CWA and has properly operated and maintained the facilities but nevertheless has been unable to achieve those effluent limitations. In this case, the limitations in the modified permit may reflect the level of pollutant control actually achieved (but shall not be less stringent than required by a subsequently promulgated effluent limitations guideline).

(17) [Reserved]

(18) *Land application plans.* When required by a permit condition to incorporate a land application plan for beneficial reuse of sewage sludge, to revise an existing land application plan, or to add a land application plan.

(b) *Causes for modification or revocation and reissuance.* The following are causes to modify or, alternatively, revoke and reissue a permit:

(1) Cause exists for termination under § 122.64, and the Director determines that modification or revocation and reissuance is appropriate.

(2) The Director has received notification (as required in the permit, see § 122.41(l)(3)) of a proposed transfer of the permit. A permit also may be modified to reflect a transfer after the effective date of an automatic transfer (§ 122.61(b)) but will not be revoked and reissued after the effective date of the transfer except upon the request of the new permittee.

[48 FR 14153, Apr. 1, 1983, as amended at 49 FR 25981, June 25, 1984; 49 FR 37009, Sept. 29, 1984; 49 FR 38050, Sept. 26, 1984; 50 FR 4514, Jan. 31, 1985; 51 FR 20431, June 4, 1986; 51 FR 26993, July 28, 1986; 54 FR 256, 258, Jan. 4, 1989; 54 FR 18784, May 2, 1989; 60 FR 33931, June 29, 1995]

§ 122.63 Minor modifications of permits.

Upon the consent of the permittee, the Director may modify a permit to make the corrections or allowances for changes in the permitted activity listed in this section, without following the procedures of part 124. Any permit modification not processed as a minor modification under this section must be made for cause and with part 124 draft permit and public notice as required in § 122.62. Minor modifications may only:

(a) Correct typographical errors;

(b) Require more frequent monitoring or reporting by the permittee;

(c) Change an interim compliance date in a schedule of compliance, provided the new date is not more than 120 days after the date specified in the existing permit and does not interfere with attainment of the final compliance date requirement; or

(d) Allow for a change in ownership or operational control of a facility where the Director determines that no other change in the permit is necessary, provided that a written agreement containing a specific date for transfer of permit responsibility, coverage, and liability between the current and new permittees has been submitted to the Director.

(e)(1) Change the construction schedule for a discharger which is a new source. No such change shall affect a discharger's obligation to have all pollution control equipment installed and in operation prior to discharge under § 122.29.

(2) Delete a point source outfall when the discharge from that outfall is terminated and does not result in discharge of pollutants from other outfalls except in accordance with permit limits.

(f) [Reserved]

(g) Incorporate conditions of a POTW pretreatment program that has been approved in accordance with the procedures in 40 CFR 403.11 (or a modification thereto that has been approved in accordance with the procedures in 40 CFR 403.18) as enforceable conditions of the POTW's permits.

[48 FR 14153, Apr. 1, 1983, as amended at 49 FR 38051, Sept. 26, 1984; 51 FR 20431, June 4, 1986; 53 FR 40616, Oct. 17, 1988; 60 FR 33931, June 29, 1995]

§ 122.64 Termination of permits (applicable to State programs, see § 123.25).

(a) The following are causes for terminating a permit during its term, or

for denying a permit renewal application:

(1) Noncompliance by the permittee with any condition of the permit;

(2) The permittee's failure in the application or during the permit issuance process to disclose fully all relevant facts, or the permittee's misrepresentation of any relevant facts at any time;

(3) A determination that the permitted activity endangers human health or the environment and can only be regulated to acceptable levels by permit modification or termination; or

(4) A change in any condition that requires either a temporary or permanent reduction or elimination of any discharge or sludge use or disposal practice controlled by the permit (for example, plant closure or termination of discharge by connection to a POTW).

(b) The Director shall follow the applicable procedures in part 124 or State procedures in terminating any NPDES permit under this section.

[48 FR 14153, Apr. 1, 1983; 50 FR 6940, Feb. 19, 1985, as amended at 54 FR 18784, May 2, 1989]

APPENDIX A TO PART 122—NPDES PRIMARY INDUSTRY CATEGORIES

Any permit issued after June 30, 1981 to dischargers in the following categories shall include effluent limitations and a compliance schedule to meet the requirements of section 301(b)(2)(A), (C), (D), (E) and (F) of CWA, whether or not applicable effluent limitations guidelines have been promulgated. See §§122.44 and 122.46.

Industry Category

Adhesives and sealants
Aluminum forming
Auto and other laundries
Battery manufacturing
Coal mining
Coil coating
Copper forming
Electrical and electronic components
Electroplating
Explosives manufacturing
Foundries
Gum and wood chemicals
Inorganic chemicals manufacturing
Iron and steel manufacturing
Leather tanning and finishing
Mechanical products manufacturing
Nonferrous metals manufacturing
Ore mining
Organic chemicals manufacturing
Paint and ink formulation
Pesticides
Petroleum refining
Pharmaceutical preparations
Photographic equipment and supplies
Plastics processing
Plastic and synthetic materials manufacturing
Porcelain enameling
Printing and publishing
Pulp and paper mills
Rubber processing
Soap and detergent manufacturing
Steam electric power plants
Textile mills
Timber products processing

APPENDIX B TO PART 122—CRITERIA FOR DETERMINING A CONCENTRATED ANIMAL FEEDING OPERATION (§122.23)

An animal feeding operation is a concentrated animal feeding operation for purposes of §122.23 if either of the following criteria are met.

(a) More than the numbers of animals specified in any of the following categories are confined:

(1) 1,000 slaughter and feeder cattle,

(2) 700 mature dairy cattle (whether milked or dry cows),

(3) 2,500 swine each weighing over 25 kilograms (approximately 55 pounds),

(4) 500 horses,

(5) 10,000 sheep or lambs,

(6) 55,000 turkeys,

(7) 100,000 laying hens or broilers (if the facility has continuous overflow watering),

(8) 30,000 laying hens or broilers (if the facility has a liquid manure system),

(9) 5,000 ducks, or

(10) 1,000 animal units; or

(b) More than the following number and types of animals are confined:

(1) 300 slaughter or feeder cattle,

(2) 200 mature dairy cattle (whether milked or dry cows),

(3) 750 swine each weighing over 25 kilograms (approximately 55 pounds),

(4) 150 horses,

(5) 3,000 sheep or lambs,

(6) 16,500 turkeys,

(7) 30,000 laying hens or broilers (if the facility has continuous overflow watering),

(8) 9,000 laying hens or broilers (if the facility has a liquid manure handling system),

(9) 1,500 ducks, or

(10) 300 animal units;

and either one of the following conditions are met: pollutants are discharged into navigable waters through a manmade ditch, flushing system or other similar man-made device; or pollutants are discharged directly into waters of the United States which originate outside of and pass over, across, or through the facility or otherwise come into direct contact with the animals confined in the operation.

Provided, however, that no animal feeding operation is a concentrated animal feeding operation as defined above if such animal feeding operation discharges only in the event of a 25 year, 24-hour storm event.

The term *animal unit* means a unit of measurement for any animal feeding operation calculated by adding the following numbers: the number of slaughter and feeder cattle multiplied by 1.0, plus the number of mature dairy cattle multiplied by 1.4, plus the number of swine weighing over 25 kilograms (approximately 55 pounds) multiplied by 0.4, plus the number of sheep multiplied by 0.1, plus the number of horses multiplied by 2.0.

The term *manmade* means constructed by man and used for the purpose of transporting wastes.

APPENDIX C TO PART 122—CRITERIA FOR DETERMINING A CONCENTRATED AQUATIC ANIMAL PRODUCTION FACILITY (§ 122.24)

A hatchery, fish farm, or other facility is a concentrated aquatic animal production facility for purposes of § 122.24 if it contains, grows, or holds aquatic animals in either of the following categories:

(a) Cold water fish species or other cold water aquatic animals in ponds, raceways, or other similar structures which discharge at least 30 days per year but does not include:

(1) Facilities which produce less than 9,090 harvest weight kilograms (approximately 20,000 pounds) of aquatic animals per year; and

(2) Facilities which feed less than 2,272 kilograms (approximately 5,000 pounds) of food during the calendar month of maximum feeding.

(b) Warm water fish species or other warm water aquatic animals in ponds, raceways, or other similar structures which discharge at least 30 days per year, but does not include:

(1) Closed ponds which discharge only during periods of excess runoff; or

(2) Facilities which produce less than 45,454 harvest weight kilograms (approximately 100,000 pounds) of aquatic animals per year.

''Cold water aquatic animals'' include, but are not limited to, the *Salmonidae* family of fish; e.g., trout and salmon.

''Warm water aquatic animals'' include, but are not limited to, the *Ameiuride*, *Centrarchidae* and *Cyprinidae* families of fish; e.g., respectively, catfish, sunfish and minnows.

APPENDIX D TO PART 122—NPDES PERMIT APPLICATION TESTING REQUIREMENTS (§ 122.21)

TABLE I—TESTING REQUIREMENTS FOR ORGANIC TOXIC POLLUTANTS BY INDUSTRIAL CATEGORY FOR EXISTING DISCHARGERS

Industrial category	GC/MS Fraction [1]			
	Volatile	Acid	Base/neutral	Pesticide
Adhesives and Sealants	2	2	2	
Aluminum Forming	2	2	2	
Auto and Other Laundries	2	2	2	2
Battery Manufacturing	2		2	
Coal Mining	2	2	2	2
Coil Coating	2	2	2	
Copper Forming	2	2	2	
Electric and Electronic Components	2	2	2	2
Electroplating	2	2	2	
Explosives Manufacturing		2	2	
Foundries	2	2	2	
Gum and Wood Chemicals	2	2	2	2
Inorganic Chemicals Manufacturing	2	2	2	
Iron and Steel Manufacturing	2	2	2	
Leather Tanning and Finishing	2	2	2	2
Mechanical Products Manufacturing	2	2	2	
Nonferrous Metals Manufacturing	2	2	2	2
Ore Mining	2	2	2	2
Organic Chemicals Manufacturing	2	2	2	2
Paint and Ink Formulation	2	2	2	2
Pesticides	2	2	2	2
Petroleum Refining	2	2	2	2
Pharmaceutical Preparations	2	2	2	
Photographic Equipment and Supplies	2	2	2	2
Plastic and Synthetic Materials Manufacturing	2	2	2	2
Plastic Processing	2			
Porcelain Enameling	2		2	2
Printing and Publishing	2	2	2	2
Pulp and Paper Mills	2	2	2	2
Rubber Processing	2	2	2	
Soap and Detergent Manufacturing	2	2	2	
Steam Electric Power Plants	2	2	2	
Textile Mills	2	2	2	2
Timber Products Processing	2	2	2	2

[1] The toxic pollutants in each fraction are listed in Table II.

[2] Testing required.

TABLE II—ORGANIC TOXIC POLLUTANTS IN EACH OF FOUR FRACTIONS IN ANALYSIS BY GAS CHROMATOGRAPHY/MASS SPECTROSCOPY (GS/MS)

Volatiles

1V acrolein
2V acrylonitrile
3V benzene
5V bromoform
6V carbon tetrachloride
7V chlorobenzene
8V chlorodibromomethane
9V chloroethane
10V 2-chloroethylvinyl ether
11V chloroform
12V dichlorobromomethane
14V 1,1-dichloroethane
15V 1,2-dichloroethane
16V 1,1-dichloroethylene
17V 1,2-dichloropropane
18V 1,3-dichloropropylene
19V ethylbenzene
20V methyl bromide
21V methyl chloride
22V methylene chloride
23V 1,1,2,2-tetrachloroethane
24V tetrachloroethylene
25V toluene
26V 1,2-trans-dichloroethylene
27V 1,1,1-trichloroethane
28V 1,1,2-trichloroethane
29V trichloroethylene
31V vinyl chloride

Acid Compounds

1A 2-chlorophenol
2A 2,4-dichlorophenol
3A 2,4-dimethylphenol
4A 4,6-dinitro-o-cresol
5A 2,4-dinitrophenol
6A 2-nitrophenol
7A 4-nitrophenol
8A p-chloro-m-cresol
9A pentachlorophenol
10A phenol
11A 2,4,6-trichlorophenol

Base/Neutral

1B acenaphthene
2B acenaphthylene
3B anthracene
4B benzidine
5B benzo(a)anthracene
6B benzo(a)pyrene
7B 3,4-benzofluoranthene
8B benzo(ghi)perylene
9B benzo(k)fluoranthene
10B bis(2-chloroethoxy)methane
11B bis(2-chloroethyl)ether
12B bis(2-chloroisopropyl)ether
13B bis (2-ethylhexyl)phthalate
14B 4-bromophenyl phenyl ether
15B butylbenzyl phthalate
16B 2-chloronaphthalene
17B 4-chlorophenyl phenyl ether
18B chrysene
19B dibenzo(a,h)anthracene
20B 1,2-dichlorobenzene
21B 1,3-dichlorobenzene
22B 1,4-dichlorobenzene
23B 3,3′-dichlorobenzidine
24B diethyl phthalate
25B dimethyl phthalate
26B di-n-butyl phthalate
27B 2,4-dinitrotoluene
28B 2,6-dinitrotoluene
29B di-n-octyl phthalate
30B 1,2-diphenylhydrazine (as azobenzene)
31B fluroranthene
32B fluorene
33B hexachlorobenzene
34B hexachlorobutadiene
35B hexachlorocyclopentadiene
36B hexachloroethane
37B indeno(1,2,3-cd)pyrene
38B isophorone
39B napthalene
40B nitrobenzene
41B N-nitrosodimethylamine
42B N-nitrosodi-n-propylamine
43B N-nitrosodiphenylamine
44B phenanthrene
45B pyrene
46B 1,2,4-trichlorobenzene

Pesticides

1P aldrin
2P alpha-BHC
3P beta-BHC
4P gamma-BHC
5P delta-BHC
6P chlordane
7P 4,4′-DDT
8P 4,4′-DDE
9P 4,4′-DDD
10P dieldrin
11P alpha-endosulfan
12P beta-endosulfan
13P endosulfan sulfate
14P endrin
15P endrin aldehyde
16P heptachlor
17P heptachlor epoxide
18P PCB-1242
19P PCB-1254
20P PCB-1221
21P PCB-1232
22P PCB-1248
23P PCB-1260
24P PCB-1016
25P toxaphene

TABLE III—OTHER TOXIC POLLUTANTS (METALS AND CYANIDE) AND TOTAL PHENOLS

Antimony, Total
Arsenic, Total
Beryllium, Total
Cadmium, Total

Chromium, Total
Copper, Total
Lead, Total
Mercury, Total
Nickel, Total
Selenium, Total
Silver, Total
Thallium, Total
Zinc, Total
Cyanide, Total
Phenols, Total

TABLE IV—CONVENTIONAL AND NONCONVENTIONAL POLLUTANTS REQUIRED TO BE TESTED BY EXISTING DISCHARGERS IF EXPECTED TO BE PRESENT

Bromide
Chlorine, Total Residual
Color
Fecal Coliform
Fluoride
Nitrate-Nitrite
Nitrogen, Total Organic
Oil and Grease
Phosphorus, Total
Radioactivity
Sulfate
Sulfide
Sulfite
Surfactants
Aluminum, Total
Barium, Total
Boron, Total
Cobalt, Total
Iron, Total
Magnesium, Total
Molybdenum, Total
Manganese, Total
Tin, Total
Titanium, Total

TABLE V—TOXIC POLLUTANTS AND HAZARDOUS SUBSTANCES REQUIRED TO BE IDENTIFIED BY EXISTING DISCHARGERS IF EXPECTED TO BE PRESENT

Toxic Pollutants

Asbestos

Hazardous Substances

Acetaldehyde
Allyl alcohol
Allyl chloride
Amyl acetate
Aniline
Benzonitrile
Benzyl chloride
Butyl acetate
Butylamine
Captan
Carbaryl
Carbofuran
Carbon disulfide
Chlorpyrifos
Coumaphos
Cresol
Crotonaldehyde
Cyclohexane
2,4-D (2,4-Dichlorophenoxy acetic acid)
Diazinon
Dicamba
Dichlobenil
Dichlone
2,2-Dichloropropionic acid
Dichlorvos
Diethyl amine
Dimethyl amine
Dintrobenzene
Diquat
Disulfoton
Diuron
Epichlorohydrin
Ethion
Ethylene diamine
Ethylene dibromide
Formaldehyde
Furfural
Guthion
Isoprene
Isopropanolamine Dodecylbenzenesulfonate
Kelthane
Kepone
Malathion
Mercaptodimethur
Methoxychlor
Methyl mercaptan
Methyl methacrylate
Methyl parathion
Mevinphos
Mexacarbate
Monoethyl amine
Monomethyl amine
Naled
Napthenic acid
Nitrotoluene
Parathion
Phenolsulfanate
Phosgene
Propargite
Propylene oxide
Pyrethrins
Quinoline
Resorcinol
Strontium
Strychnine
Styrene
2,4,5-T (2,4,5-Trichlorophenoxy acetic acid)
TDE (Tetrachlorodiphenylethane)
2,4,5-TP [2-(2,4,5-Trichlorophenoxy) propanoic acid]
Trichlorofan
Triethanolamine dodecylbenzenesulfonate
Triethylamine
Trimethylamine
Uranium
Vanadium
Vinyl acetate
Xylene
Xylenol
Zirconium

[Note 1: The Environmental Protection Agency has suspended the requirements of §122.21(g)(7)(ii)(A) and Table I of Appendix D as they apply to certain industrial categories. The suspensions are as follows:

a. At 46 FR 2046, Jan. 8, 1981, the Environmental Protection Agency suspended until further notice §122.21(g)(7)(ii)(A) as it applies to coal mines.

b. At 46 FR 22585, Apr. 20, 1981, the Environmental Protection Agency suspended until further notice §122.21(g)(7)(ii)(A) and the corresponding portions of Item V–C of the NPDES application Form 2c as they apply to:

1. Testing and reporting for all four organic fractions in the Greige Mills Subcategory of the Textile Mills industry (Subpart C—Low water use processing of 40 CFR part 410), and testing and reporting for the pesticide fraction in all other subcategories of this industrial category.

2. Testing and reporting for the volatile, base/neutral and pesticide fractions in the Base and Precious Metals Subcategory of the Ore Mining and Dressing industry (subpart B of 40 CFR part 440), and testing and reporting for all four fractions in all other subcategories of this industrial category.

3. Testing and reporting for all four GC/MS fractions in the Porcelain Enameling industry.

c. At 46 FR 35090, July 1, 1981, the Environmental Protection Agency suspended until further notice §122.21(g)(7)(ii)(A) and the corresponding portions of Item V–C of the NPDES application Form 2c as they apply to:

1. Testing and reporting for the pesticide fraction in the Tall Oil Rosin Subcategory (subpart D) and Rosin-Based Derivatives Subcategory (subpart F) of the Gum and Wood Chemicals industry (40 CFR part 454), and testing and reporting for the pesticide and base/netural fractions in all other subcategories of this industrial category.

2. Testing and reporting for the pesticide fraction in the Leather Tanning and Finishing, Paint and Ink Formulation, and Photographic Supplies industrial categories.

3. Testing and reporting for the acid, base/neutral and pesticide fractions in the Petroleum Refining industrial category.

4. Testing and reporting for the pesticide fraction in the Papergrade Sulfite subcategories (subparts J and U) of the Pulp and Paper industry (40 CFR part 430); testing and reporting for the base/neutral and pesticide fractions in the following subcategories: Deink (subpart Q), Dissolving Kraft (subpart F), and Paperboard from Waste Paper (subpart E); testing and reporting for the volatile, base/neutral and pesticide fractions in the following subcategories: BCT Bleached Kraft (subpart H), Semi-Chemical (subparts B and C), and Nonintegrated-Fine Papers (subpart R); and testing and reporting for the acid, base/neutral, and pesticide fractions in the following subcategories: Fine Bleached Kraft (subpart I), Dissolving Sulfite Pulp (subpart K), Groundwood-Fine Papers (subpart O), Market Bleached Kraft (subpart G), Tissue from Wastepaper (subpart T), and Nonintegrated-Tissue Papers (subpart S).

5. Testing and reporting for the base/neutral fraction in the Once-Through Cooling Water, Fly Ash and Bottom Ash Transport Water process wastestreams of the Steam Electric Power Plant industrial category.

This revision continues these suspensions.]*

For the duration of the suspensions, therefore, Table I effectively reads:

TABLE I—TESTING REQUIREMENTS FOR ORGANIC TOXIC POLLUTANTS BY INDUSTRY CATEGORY

Industry category	GC/MS fraction [2]			
	Volatile	Acid	Neutral	Pesticide
Adhesives and sealants	(1)	(1)	(1)	
Aluminum forming	(1)	(1)	(1)	
Auto and other laundries	(1)	(1)	(1)	(1)
Battery manufacturing	(1)		(1)	
Coal mining				
Coil coating	(1)	(1)	(1)	
Copper forming	(1)	(1)	(1)	
Electric and electronic compounds	(1)	(1)	(1)	(1)
Electroplating	(1)	(1)	(1)	
Explosives manufacturing		(1)	(1)	
Foundries	(1)	(1)	(1)	
Gum and wood (all subparts except D and F)	(1)	(1)		
Subpart D—tall oil rosin	(1)	(1)	(1)	
Subpart F—rosin-based derivatives	(1)	(1)	(1)	
Inorganic chemicals manufacturing	(1)	(1)	(1)	
Iron and steel manufacturing	(1)	(1)	(1)	
Leather tanning and finishing	(1)	(1)	(1)	
Mechanical products manufacturing	(1)	(1)	(1)	
Nonferrous metals manufacturing	(1)	(1)	(1)	(1)
Ore mining (applies to the base and precious metals/Subpart B)		(1)		
Organic chemicals manufacturing	(1)	(1)	(1)	(1)
Paint and ink formulation	(1)	(1)	(1)	
Pesticides	(1)	(1)	(1)	(1)
Petroleum refining	(1)			
Pharmaceutical preparations	(1)	(1)	(1)	
Photographic equipment and supplies	(1)	(1)	(1)	
Plastic and synthetic materials manufacturing	(1)	(1)	(1)	(1)
Plastic processing	(1)			
Porcelain enameling				
Printing and publishing	(1)	(1)	(1)	(1)

*Editorial Note: The words ''This revision'' refer to the document published at 48 FR 14153, Apr. 1, 1983.

TABLE I—TESTING REQUIREMENTS FOR ORGANIC TOXIC POLLUTANTS BY INDUSTRY CATEGORY—Continued

Industry category	GC/MS fraction [2]			
	Volatile	Acid	Neutral	Pesticide
Pulp and paperboard mills—see footnote [3]				
Rubber processing	(1)	(1)	(1)	
Soap and detergent manufacturing	(1)	(1)	(1)	
Steam electric power plants	(1)	(1)		
Textile mills (Subpart C—Greige Mills are exempt from this table)	(1)	(1)	(1)	
Timber products processing	(1)	(1)	(1)	(1)

[1] Testing required.
[2] The pollutants in each fraction are listed in Item V–C.
[3] Pulp and Paperboard Mills:

Subpart [3]	GS/MS fractions			
	VOA	Acid	Base/neutral	Pesticides
A	2	(1)	2	(1)
B	2	(1)	2	2
C	2	(1)	2	2
D	2	(1)	2	2
E	(1)	(1)	2	(1)
F	(1)	(1)	2	2
G	(1)	(1)	2	2
H	(1)	(1)	2	2
I	(1)	(1)	2	2
J	(1)	(1)	(1)	2
K	(1)	(1)	2	2
L	(1)	(1)	2	2
M	(1)	(1)	2	2
N	(1)	(1)	2	2
O	(1)	(1)	2	2
P	(1)	(1)	2	2
Q	(1)	(1)	2	(1)
R	2	(1)	2	2
S	(1)	(1)	2	(1)
T	(1)	(1)	2	(1)
U	(1)	(1)	(1)	2

[1] Must test.
[2] Do not test unless ''reason to believe'' it is discharged.
[3] Subparts are defined in 40 CFR Part 430.

[48 FR 14153, Apr. 1, 1983, as amended at 49 FR 38050, Sept. 26, 1984; 50 FR 6940, Feb. 19, 1985]

APPENDIX E TO PART 122—RAINFALL ZONES OF THE UNITED STATES

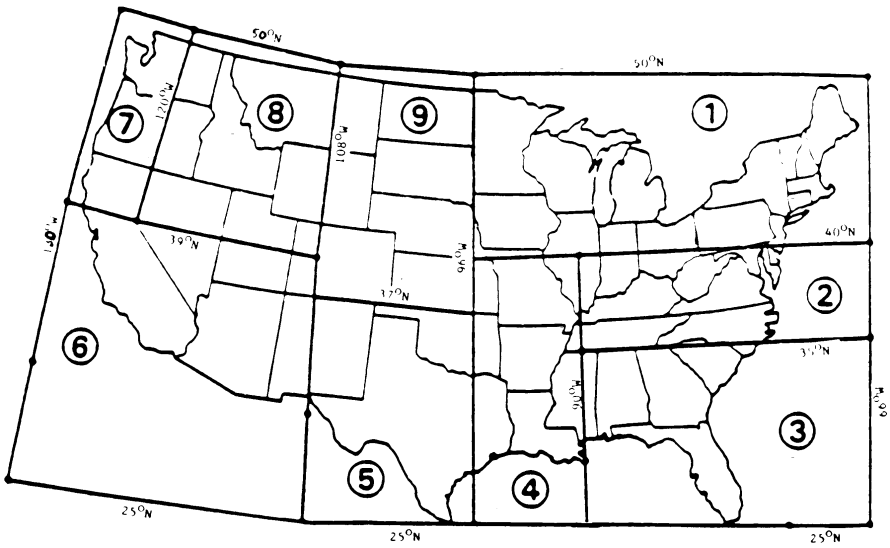

Not Shown: Alaska (Zone 7); Hawaii (Zone 7); Northern Mariana Islands (Zone 7); Guam (Zone 7); American Samoa (Zone 7); Trust Territory of the Pacific Islands (Zone 7); Puerto Rico (Zone 3) Virgin Islands (Zone 3).

Source: Methodology for Analysis of Detention Basins for Control of Urban Runoff Quality, prepared for U.S. Environmental Protection Agency, Office of Water, Nonpoint Source Division, Washington, DC, 1986.

[55 FR 48073, Nov. 16, 1990]

APPENDIX F TO PART 122—INCORPORATED PLACES WITH POPULATIONS GREATER THAN 250,000 ACCORDING TO LATEST DECENNIAL CENSUS BY BUREAU OF CENSUS

State	Incorporated place
Alabama	Birmingham.
Arizona	Phoenix.
	Tucson.
California	Long Beach.
	Los Angeles.
	Oakland.
	Sacramento.
	San Diego.
	San Francisco.
	San Jose.
Colorado	Denver.
District of Columbia	
Florida	Jacksonville.
	Miami.
	Tampa.
Georgia	Atlanta.
Illinois	Chicago.
Indiana	Indianapolis.
Kansas	Wichita.
Kentucky	Louisville.
Louisiana	New Orleans.
Maryland	Baltimore.
Massachusetts	Boston.
Michigan	Detroit.
Minnesota	Minneapolis
	St. Paul.
Missouri	Kansas City.
	St. Louis.
Nebraska	Omaha.
New Jersey	Newark.
New Mexico	Albuquerque.
New York	Buffalo.
	Bronx Borough.
	Brooklyn Borough.
	Manhattan Borough.
	Queens Borough.
	Staten Island Borough.
North Carolina	Charlotte.
Ohio	Cincinnati.
	Cleveland.
	Columbus.
	Toledo.
Oklahoma	Oklahoma City.
	Tulsa.
Oregon	Portland.
Pennsylvania	Philadelphia.
	Pittsburgh.
Tennessee	Memphis.
	Nashville/Davidson.
Texas	Austin.
	Dallas.
	El Paso.
	Fort Worth.
	Houston.
	San Antonio.
Virginia	Norfolk.
	Virginia Beach.
Washington	Seattle.
Wisconsin	Milwaukee.

[55 FR 48073, Nov. 16, 1990]

APPENDIX G TO PART 122—PLACES WITH POPULATIONS GREATER THAN 100,000 AND LESS THAN 250,000 ACCORDING TO LATEST DECENNIAL CENSUS BY BUREAU OF CENSUS

State	Incorporated place
Alabama	Huntsville.
	Mobile.
	Montgomery.
Alaska	Anchorage.
Arizona	Mesa.
	Tempe.
Arkansas	Little Rock.
California	Anaheim.
	Bakersfield.
	Berkeley.
	Concord.
	Fremont.
	Fresno.
	Fullerton.
	Garden Grove.
	Glendale.
	Huntington Beach.
	Modesto.
	Oxnard.
	Pasadena.
	Riverside.
	San Bernadino.
	Santa Ana.
	Stockton.
	Sunnyvale.
	Torrance.
Colorado	Aurora.
	Colorado Springs.
	Lakewood.
	Pueblo.
Connecticut	Bridgeport.
	Hartford.
	New Haven.
	Stamford.
	Waterbury.
Florida	Fort Lauderdale.
	Hialeah.
	Hollywood.
	Orlando.
	St. Petersburg.
Georgia	Columbus.
	Macon.
	Savannah.
Idaho	Boise City.
Illinois	Peoria.
	Rockford.
Indiana	Evansville.
	Fort Wayne.
	Gary.
	South Bend.
Iowa	Cedar Rapids.
	Davenport.

State	Incorporated place
	Des Moines.
Kansas	Kansas City.
	Topeka.
Kentucky	Lexington-Fayette.
Louisiana	Baton Rouge.
	Shreveport.
Massachusetts	Springfield.
	Worcester.
Michigan	Ann Arbor.
	Flint.
	Grand Rapids.
	Lansing.
	Livonia.
	Sterling Heights.
	Warren.
Mississippi	Jackson.
Missouri	Independence.
	Springfield.
Nebraska	Lincoln.
Nevada	Las Vegas.
	Reno.
New Jersey	Elizabeth.
	Jersey City.
	Paterson.
New York	Albany.
	Rochester.
	Syracuse.
	Yonkers.
North Carolina	Durham.
	Greensboro.
	Raleigh.
	Winston-Salem.
Ohio	Akron.
	Dayton.
	Youngstown.
Oregon	Eugene.
Pennsylvania	Allentown.
	Erie.
Rhode Island	Providence.
South Carolina	Columbia.
Tennessee	Chattanooga.
	Knoxville.
Texas	Amarillo.
	Arlington.
	Beaumont.
	Corpus Christi.
	Garland.
	Irving.
	Lubbock.
	Pasadena.
	Waco.
Utah	Salt Lake City.
Virginia	Alexandria.
	Chesapeake.
	Hampton.
	Newport News.
	Portsmouth.
	Richmond.
	Roanoke.
Washington	Spokane.
	Tacoma.
Wisconsin	Madison.

[55 FR 48074, Nov. 16, 1990]

APPENDIX H TO PART 122—COUNTIES WITH UNINCORPORATED URBANIZED AREAS WITH A POPULATION OF 250,000 OR MORE ACCORDING TO THE LATEST DECENNIAL CENSUS BY THE BUREAU OF CENSUS

State	County	Unincorporated urbanized population
California	Los Angeles	912,664
	Sacramento	449,056
	San Diego	304,758
Delaware	New Castle	257,184
Florida	Dade	781,949
Georgia	DeKalb	386,379
Hawaii	Honolulu	688,178
Maryland	Anne Arundel	271,458
	Baltimore	601,308
	Montgomery	447,993
	Prince George's	450,188
Texas	Harris	409,601
Utah	Salt Lake	304,632
Virginia	Fairfax	527,178
Washington	King	336,800

[55 FR 48074, Nov. 16, 1990]

APPENDIX I TO PART 122—COUNTIES WITH UNINCORPORATED URBANIZED AREAS GREATER THAN 100,000, BUT LESS THAN 250,000 ACCORDING TO THE LATEST DECENNIAL CENSUS BY THE BUREAU OF CENSUS

State	County	Unincorporated urbanized population
Alabama	Jefferson	102,917
Arizona	Pima	111,479
California	Alameda	187,474
	Contra Costa	158,452
	Kern	117,231
	Orange	210,693
	Riverside	115,719
	San Bernardino	148,644
Florida	Broward	159,370
	Escambia	147,892
	Hillsborough	238,292
	Orange	245,325
	Palm Beach	167,089
	Pinellas	194,389
	Polk	104,150
	Sarasota	110,009
Georgia	Clayton	100,742
	Cobb	204,121
	Richmond	118,529
Kentucky	Jefferson	224,958
Louisiana	Jefferson	140,836
North Carolina	Cumberland	142,727
Nevada	Clark	201,775
Oregon	Multnomah	141,100
	Washington	109,348
South Carolina	Greenville	135,398
	Richland	124,684
Virginia	Arlington	152,599
	Henrico	161,204

State	County	Unincorporated urbanized population
Washington	Chesterfield	108,348
	Snohomish	103,493
	Pierce	196,113

[55 FR 48074, Nov. 16, 1990]

PART 123—STATE PROGRAM REQUIREMENTS

Subpart A—General

Sec.
123.1 Purpose and scope.
123.2 Definitions.
123.3 Coordination with other programs.

Subpart B—State Program Submissions

123.21 Elements of a program submission.
123.22 Program description.
123.23 Attorney General's statement.
123.24 Memorandum of Agreement with the Regional Administrator.
123.25 Requirements for permitting.
123.26 Requirements for compliance evaluation programs.
123.27 Requirements for enforcement authority.
123.28 Control of disposal of pollutants into wells.
123.29 Prohibition.
123.30 Judicial review of approval or denial of permits.
123.31 Requirements for eligibility of Indian Tribes.
123.32 Request by an Indian Tribe for a determination of eligibility.
123.33 Procedures for processing an Indian Tribe's application.
123.34 Provisions for Tribal criminal enforcement authority.

Subpart C—Transfer of Information and Permit Review

123.41 Sharing of information.
123.42 Receipt and use of Federal information.
123.43 Transmission of information to EPA.
123.44 EPA review of and objections to State permits.
123.45 Noncompliance and program reporting by the Director.
123.46 Individual control strategies.

Subpart D—Program Approval, Revision and Withdrawal

123.61 Approval process.
123.62 Procedures for revision of State programs.
123.63 Criteria for withdrawal of State programs.
123.64 Procedures for withdrawal of State programs.

AUTHORITY: Clean Water Act, 33 U.S.C. 1251 *et seq.*

SOURCE: 48 FR 14178, Apr. 1, 1983, unless otherwise noted.

Subpart A—General

§123.1 Purpose and scope.

(a) This part specifies the procedures EPA will follow in approving, revising, and withdrawing State programs and the requirements State programs must meet to be approved by the Administrator under sections 318, 402, and 405 (National Pollutant Discharge Elimination System—NPDES) of CWA.

(b) These regulations are promulgated under the authority of sections 304(i), 101(e), 405, and 518(e) of the CWA, and implement the requirements of those sections.

(c) The Administrator shall approve State programs which conform to the applicable requirements of this part. A State NPDES program will not be approved by the Administrator under section 402 of CWA unless it has authority to control the discharges specified in sections 318 and 405(a) of CWA. Permit programs under sections 318 and 405(a) will not be approved independent of a section 402 program. (Permit programs under section 405(f) of CWA (sludge management programs) may be approved under 40 CFR part 501 independently of a section 402 permit program.)

(d)(1) Upon approval of a State program, the Administrator shall suspend the issuance of Federal permits for those activities subject to the approved State program. After program approval EPA shall retain jurisdiction over any permits (including general permits) which it has issued unless arrangements have been made with the State in the Memorandum of Agreement for the State to assume responsibility for these permits. Retention of jurisdiction shall include the processing of any permit appeals, modification requests, or variance requests; the conduct of inspections, and the receipt and review of self-monitoring reports. If any permit appeal, modification request or variance request is not finally resolved

when the federally issued permit expires, EPA may, with the consent of the State, retain jurisdiction until the matter is resolved.

(2) The procedures outlined in the preceding paragraph (d)(1) of this section for suspension of permitting authority and transfer of existing permits will also apply when EPA approves an Indian Tribe's application to operate a State program and a State was the authorized permitting authority under § 123.23(b) for activities within the scope of the newly approved program. The authorized State will retain jurisdiction over its existing permits as described in paragraph (d)(1) of this section absent a different arrangement stated in the Memorandum of Agreement executed between EPA and the Tribe.

(e) Upon submission of a complete program, EPA will conduct a public hearing, if interest is shown, and determine whether to approve or disapprove the program taking into consideration the requirements of this part, the CWA and any comments received.

(f) Any State program approved by the Administrator shall at all times be conducted in accordance with the requirements of this part.

(g)(1) Except as may be authorized pursuant to paragraph (g)(2) of this section or excluded by § 122.3, the State program must prohibit all point source discharges of pollutants, all discharges into aquaculture projects, and all disposal of sewage sludge which results in any pollutant from such sludge entering into any waters of the United States within the State's jurisdiction except as authorized by a permit in effect under the State program or under section 402 of CWA. NPDES authority may be shared by two or more State agencies but each agency must have Statewide jurisdiction over a class of activities or discharges. When more than one agency is responsible for issuing permits, each agency must make a submission meeting the requirements of § 123.21 before EPA will begin formal review.

(2) A State may seek approval of a partial or phased program in accordance with section 402(n) of the CWA.

(h) In many cases, States (other than Indian Tribes) will lack authority to regulate activities on Indian lands. This lack of authority does not impair that State's ability to obtain full program approval in accordance with this part, i.e., inability of a State to regulate activities on Indian lands does not constitute a partial program. EPA will administer the program on Indian lands if a State (or Indian Tribe) does not seek or have authority to regulate activities on Indian lands.

NOTE: States are advised to contact the United States Department of the Interior, Bureau of Indian Affairs, concerning authority over Indian lands.

(i) Nothing in this part precludes a State from:

(1) Adopting or enforcing requirements which are more stringent or more extensive than those required under this part;

(2) Operating a program with a greater scope of coverage than that required under this part. If an approved State program has greater scope of coverage than required by Federal law the additional coverage is not part of the Federally approved program.

NOTE: For example, if a State requires permits for discharges into publicly owned treatment works, these permits are not NPDES permits.

[48 FR 14178, Apr. 1, 1983, as amended at 54 FR 256, Jan. 4, 1989; 54 FR 18784, May 2, 1989; 58 FR 67981, Dec. 22, 1993; 59 FR 64343, Dec. 14, 1994]

§ 123.2 Definitions.

The definitions in part 122 and part 501 apply to all subparts of this part.

[54 FR 18784, May 2, 1989]

§ 123.3 Coordination with other programs.

Issuance of State permits under this part may be coordinated with issuance of RCRA, UIC, NPDES, and 404 permits whether they are controlled by the State, EPA, or the Corps of Engineers. See § 124.4.

Subpart B—State Program Submissions

§ 123.21 Elements of a program submission.

(a) Any State that seeks to administer a program under this part shall

submit to the Administrator at least three copies of a program submission. The submission shall contain the following:

(1) A letter from the Governor of the State (or in the case of an Indian Tribe in accordance with §123.33(b), the Tribal authority exercising powers substantially similar to those of a State Governor) requesting program approval;

(2) A complete program description, as required by §123.22, describing how the State intends to carry out its responsibilities under this part;

(3) An Attorney General's statement as required by §123.23;

(4) A Memorandum of Agreement with the Regional Administrator as required by §123.24;

(5) Copies of all applicable State statutes and regulations, including those governing State administrative procedures;

(b)(1) Within 30 days of receipt by EPA of a State program submission, EPA will notify the State whether its submission is complete. If EPA finds that a State's submission is complete, the statutory review period (i.e., the period of time allotted for formal EPA review of a proposed State program under CWA) shall be deemed to have begun on the date of receipt of the State's submission. If EPA finds that a State's submission is incomplete, the statutory review period shall not begin until all the necessary information is received by EPA.

(2) In the case of an Indian Tribe eligible under §123.33(b), EPA shall take into consideration the contents of the Tribe's request submitted under §123.32, in determining if the program submission required by §123.21(a) is complete.

(c) If the State's submission is materially changed during the statutory review period, the statutory review period shall begin again upon receipt of the revised submission.

(d) The State and EPA may extend the statutory review period by agreement.

[48 FR 14178, Apr. 1, 1983; 50 FR 6941, Feb. 19, 1985, as amended at 58 FR 67981, Dec. 22, 1993; 59 FR 64343, Dec. 14, 1994]

§123.22 Program description.

Any State that seeks to administer a program under this part shall submit a description of the program it proposes to administer in lieu of the Federal program under State law or under an interstate compact. The program description shall include:

(a) A description in narrative form of the scope, structure, coverage and processes of the State program.

(b) A description (including organization charts) of the organization and structure of the State agency or agencies which will have responsibility for administering the program, including the information listed below. If more than one agency is responsible for administration of a program, each agency must have statewide jurisdiction over a class of activities. The responsibilities of each agency must be delineated, their procedures for coordination set forth, and an agency may be designated as a ''lead agency'' to facilitate communications between EPA and the State agencies having program responsibility. If the State proposes to administer a program of greater scope of coverage than is required by Federal law, the information provided under this paragraph shall indicate the resources dedicated to administering the Federally required portion of the program.

(1) A description of the State agency staff who will carry out the State program, including the number, occupations, and general duties of the employees. The State need not submit complete job descriptions for every employee carrying out the State program.

(2) An itemization of the estimated costs of establishing and administering the program for the first two years after approval, including cost of the personnel listed in paragraph (b)(1) of this section, cost of administrative support, and cost of technical support.

(3) An itemization of the sources and amounts of funding, including an estimate of Federal grant money, available to the State Director for the first two years after approval to meet the costs listed in paragraph (b)(2) of this section, identifying any restrictions or limitations upon this funding.

(c) A description of applicable State procedures, including permitting procedures and any State administrative or judicial review procedures;

(d) Copies of the permit form(s), application form(s), and reporting form(s) the State intends to employ in its program. Forms used by States need not be identical to the forms used by EPA but should require the same basic information, except that State NPDES programs are required to use standard Discharge Monitoring Reports (DMR). The State need not provide copies of uniform national forms it intends to use but should note its intention to use such forms.

NOTE: States are encouraged to use uniform national forms established by the Administrator. If uniform national forms are used, they may be modified to include the State Agency's name, address, logo, and other similar information, as appropriate, in place of EPA's.

(e) A complete description of the State's compliance tracking and enforcement program.

(f) A State seeking approval of a sludge management program under section 405(f) of the CWA as part of its NPDES program, in addition to the above requirements of this section, shall include the inventory as required in 40 CFR 501.12(f).

(g) In the case of Indian Tribes eligible under § 123.33(b), if a State has been authorized by EPA to issue permits on the Federal Indian reservation in accordance with § 123.23(b), a description of how responsibility for pending permit applications, existing permits, and supporting files will be transferred from the State to the eligible Indian Tribe. To the maximum extent practicable, this should include a Memorandum of Agreement negotiated between the State and the Indian Tribe addressing the arrangements for such transfer.

[48 FR 14178, Apr. 1, 1983; 50 FR 6941, Feb. 19, 1985, as amended at 54 FR 18784, May 2, 1989; 58 FR 67981, Dec. 22, 1993; 59 FR 64343, Dec. 14, 1994]

§ 123.23 Attorney General's statement.

(a) Any State that seeks to administer a program under this part shall submit a statement from the State Attorney General (or the attorney for those State or interstate agencies which have independent legal counsel) that the laws of the State, or an interstate compact, provide adequate authority to carry out the program described under § 123.22 and to meet the requirements of this part. This statement shall include citations to the specific statutes, administrative regulations, and, where appropriate, judicial decisions which demonstrate adequate authority. State statutes and regulations cited by the State Attorney General or independent legal counsel shall be in the form of lawfully adopted State statutes and regulations at the time the statement is signed and shall be fully effective by the time the program is approved. To qualify as ''independent legal counsel'' the attorney signing the statement required by this section must have full authority to independently represent the State agency in court on all matters pertaining to the State program.

NOTE: EPA will supply States with an Attorney General's statement format on request.

(b) If a State (which is not an Indian Tribe) seeks authority over activities on Indian lands, the statement shall contain an appropriate analysis of the State's authority.

(c) The Attorney General's statement shall certify that the State has adequate legal authority to issue and enforce general permits if the State seeks to implement the general permit program under § 122.28.

[48 FR 14178, Apr. 1, 1983, as amended at 58 FR 67981, Dec. 22, 1993]

§ 123.24 Memorandum of Agreement with the Regional Administrator.

(a) Any State that seeks to administer a program under this part shall submit a Memorandum of Agreement. The Memorandum of Agreement shall be executed by the State Director and the Regional Administrator and shall become effective when approved by the Administrator. In addition to meeting the requirements of paragraph (b) of this section, the Memorandum of Agreement may include other terms, conditions, or agreements consistent with this part and relevant to the administration and enforcement of the

State's regulatory program. The Administrator shall not approve any Memorandum of Agreement which contains provisions which restrict EPA's statutory oversight responsibility.

(b) The Memorandum of Agreement shall include the following:

(1)(i) Provisions for the prompt transfer from EPA to the State of pending permit applications and any other information relevant to program operation not already in the possession of the State Director (e.g., support files for permit issuance, compliance reports, etc.). If existing permits are transferred from EPA to the State for administration, the Memorandum of Agreement shall contain provisions specifying a procedure for transferring the administration of these permits. If a State lacks the authority to directly administer permits issued by the Federal government, a procedure may be established to transfer responsibility for these permits.

NOTE: For example, EPA and the State and the permittee could agree that the State would issue a permit(s) identical to the outstanding Federal permit which would simultaneously be terminated.

(ii) Where a State has been authorized by EPA to issue permits in accordance with §123.23(b) on the Federal Indian reservation of the Indian Tribe seeking program approval, provisions describing how the transfer of pending permit applications, permits, and any other information relevant to the program operation not already in the possession of the Indian Tribe (support files for permit issuance, compliance reports, etc.) will be accomplished.

(2) Provisions specifying classes and categories of permit applications, draft permits, and proposed permits that the State will send to the Regional Administrator for review, comment and, where applicable, objection.

(3) Provisions specifying the frequency and content of reports, documents and other information which the State is required to submit to EPA. The State shall allow EPA to routinely review State records, reports, and files relevant to the administration and enforcement of the approved program. State reports may be combined with grant reports where appropriate. These procedures shall implement the requirements of §123.43.

(4) Provisions on the State's compliance monitoring and enforcement program, including:

(i) Provisions for coordination of compliance monitoring activities by the State and by EPA. These may specify the basis on which the Regional Administrator will select facilities or activities within the State for EPA inspection. The Regional Administrator will normally notify the State at least 7 days before any such inspection; and

(ii) Procedures to assure coordination of enforcement activities.

(5) When appropriate, provisions for joint processing of permits by the State and EPA for facilities or activities which require permits from both EPA and the State under different programs. (See §124.4.)

NOTE: To promote efficiency and to avoid duplication and inconsistency, States are encouraged to enter into joint processing agreements with EPA for permit issuance. Likewise, States are encouraged (but not required) to consider steps to coordinate or consolidate their own permit programs and activities.

(6) Provisions for modification of the Memorandum of Agreement in accordance with this part.

(c) The Memorandum of Agreement, the annual program grant and the State/EPA Agreement should be consistent. If the State/EPA Agreement indicates that a change is needed in the Memorandum of Agreement, the Memorandum of Agreement may be amended through the procedures set forth in this part. The State/EPA Agreement may not override the Memorandum of Agreement.

NOTE: Detailed program priorities and specific arrangements for EPA support of the State program will change and are therefore more appropriately negotiated in the context of annual agreements rather than in the MOA. However, it may still be appropriate to specify in the MOA the basis for such detailed agreements, e.g., a provision in the MOA specifying that EPA will select facilities in the State for inspection annually as part of the State/EPA agreement.

(d) The Memorandum of Agreement shall also specify the extent to which EPA will waive its right to review, object to, or comment upon State-issued

permits under section 402(d)(3), (e) or (f) of CWA. While the Regional Administrator and the State may agree to waive EPA review of certain ''classes or categories'' of permits, no waiver of review may be granted for the following classes or categories:

(1) Discharges into the territorial sea;

(2) Discharges which may affect the waters of a State other than the one in which the discharge originates;

(3) Discharges proposed to be regulated by general permits (see § 122.28);

(4) Discharges from publicly owned treatment works with a daily average discharge exceeding 1 million gallons per day;

(5) Discharges of uncontaminated cooling water with a daily average discharge exceeding 500 million gallons per day;

(6) Discharges from any major discharger or from any discharger within any of the 21 industrial categories listed in appendix A to part 122;

(7) Discharges from other sources with a daily average discharge exceeding 0.5 (one-half) million gallons per day, except that EPA review of permits for discharges of non-process wastewater may be waived regardless of flow.

(8) ''Class I sludge management facilities'' as defined in 40 CFR 501.2.

(e) Whenever a waiver is granted under paragraph (d) of this section, the Memorandum of Agreement shall contain:

(1) A statement that the Regional Administrator retains the right to terminate the waiver as to future permit actions, in whole or in part, at any time by sending the State Director written notice of termination; and

(2) A statement that the State shall supply EPA with copies of final permits.

[48 FR 14178, Apr. 1, 1983; 50 FR 6941, Feb. 19, 1985, as amended at 54 FR 18784, May 2, 1989; 58 FR 67981, Dec. 22, 1993]

§ 123.25 Requirements for permitting.

(a) All State Programs under this part must have legal authority to implement each of the following provisions and must be administered in conformance with each, except that a State which chooses not to administer a sludge management program pursuant to section 405(f) of the CWA as part of its NPDES program is not required to have legal authority to implement the portions of the following provisions which were promulgated after the enactment of the Water Quality Act of 1987 (Pub. L. 100–4) and which govern sewage sludge use and disposal. In all cases, States are not precluded from omitting or modifying any provisions to impose more stringent requirements:

(1) § 122.4—(Prohibitions):

(2) § 122.5(a) and (b)—(Effect of permit);

(3) § 122.7(b) and (c)—(Confidential information);

(4) § 122.21 (a)–(b), (c)(2), (e)–(k), and (m)–(p)—(Application for a permit);

(5) § 122.22—(Signatories);

(6) § 122.23—(Concentrated animal feeding operations);

(7) § 122.24—(Concentrated aquatic animal production facilities);

(8) § 122.25—(Aquaculture projects);

(9) § 122.26—(Storm water discharges);

(10) § 122.27—(Silviculture);

(11) § 122.28—(General permits), *Provided* that States which do not seek to implement the general permit program under § 122.28 need not do so.

(12) Section 122.41—(Applicable permit conditions)(Indian Tribes can satisfy enforcement authority requirements under § 123.34).

(13) § 122.42—(Conditions applicable to specified categories of permits);

(14) § 122.43—(Establishing permit conditions);

(15) § 122.44—(Establishing NPDES permit conditions);

(16) § 122.45—(Calculating permit conditions);

(17) § 122.46—(Duration);

(18) § 122.47(a)—(Schedules of compliance);

(19) § 122.48—(Monitoring requirements);

(20) § 122.50—(Disposal into wells);

(21) § 122.61—(Permit transfer);

(22) § 122.62—(Permit modification);

(23) § 122.64—(Permit termination);

(24) § 124.3(a)—(Application for a permit);

(25) § 124.5 (a), (c), (d), and (f)—(Modification of permits);

(26) § 124.6 (a), (c), (d), and (e)—(Draft permit);

(27) § 124.8—(Fact sheets);

(28) § 124.10 (a)(1)(ii), (a)(1)(iii), (a)(1)(v), (b), (c), (d), and (e)—(Public notice);

(29) § 124.11—(Public comments and requests for hearings);

(30) § 124.12(a)—(Public hearings); and

(31) § 124.17 (a) and (c)—(Response to comments);

(32) § 124.56—(Fact sheets);

(33) § 124.57(a)—(Public notice);

(34) § 124.59—(Comments from government agencies);

(35) § 124.62—(Decision on variances);

(36) Subparts A, B, C, D, H, I, J, K and L of part 125;

(37) 40 CFR parts 129, 133, subchapter N and 40 CFR part 503; and

(38) For a Great Lakes State or Tribe (as defined in 40 CFR 132.2), 40 CFR part 132 (NPDES permitting implementation procedures only).

NOTE: States need not implement provisions identical to the above listed provisions. Implemented provisions must, however, establish requirements at least as stringent as the corresponding listed provisions. While States may impose more stringent requirements, they may not make one requirement more lenient as a tradeoff for making another requirement more stringent; for example, by requiring that public hearings be held prior to issuing any permit while reducing the amount of advance notice of such a hearing.

State programs may, if they have adequate legal authority, implement any of the provisions of parts 122 and 124. See, for example, § 122.5(d) (continuation of permits) and § 124.4 (consolidation of permit processing).

For example, a State may impose more stringent requirements in an NPDES program by omitting the upset provision of § 122.41 or by requiring more prompt notice of an upset.

(b) State NPDES programs shall have an approved continuing planning process under 40 CFR 35.1500 and shall assure that the approved planning process is at all times consistent with CWA.

(c) State NPDES programs shall ensure that any board or body which approves all or portions of permits shall not include as a member any person who receives, or has during the previous 2 years received, a significant portion of income directly or indirectly from permit holders or applicants for a permit.

(1) For the purposes of this paragraph:

(i) *Board or body* includes any individual, including the Director, who has or shares authority to approve all or portions of permits either in the first instance, as modified or reissued, or on appeal.

(ii) *Significant portion of income* means 10 percent or more of gross personal income for a calendar year, except that it means 50 percent or more of gross personal income for a calendar year if the recipient is over 60 years of age and is receiving that portion under retirement, pension, or similar arrangement.

(iii) *Permit holders or applicants for a permit* does not include any department or agency of a State government, such as a Department of Parks or a Department of Fish and Wildlife.

(iv) *Income* includes retirement benefits, consultant fees, and stock dividends.

(2) For the purposes of paragraph (c) of this section, income is not received ''directly or indirectly from permit holders or applicants for a permit'' when it is derived from mutual fund payments, or from other diversified investments for which the recipient does not know the identity of the primary sources of income.

[48 FR 14178, Apr. 1, 1983; 50 FR 6941, Feb. 19, 1985; 50 FR 7912, Feb. 27, 1985, as amended at 54 FR 18784, May 2, 1989; 55 FR 48075, Nov. 16, 1990; 58 FR 9414, Feb. 19, 1993; 58 FR 67981, Dec. 22, 1993; 60 FR 15386, Mar. 23, 1995]

§ 123.26 Requirements for compliance evaluation programs.

(a) State programs shall have procedures for receipt, evaluation, retention and investigation for possible enforcement of all notices and reports required of permittees and other regulated persons (and for investigation for possible enforcement of failure to submit these notices and reports).

(b) State programs shall have inspection and surveillance procedures to determine, independent of information supplied by regulated persons, compliance or noncompliance with applicable program requirements. The State shall maintain:

(1) A program which is capable of making comprehensive surveys of all facilities and activities subject to the

State Director's authority to identify persons subject to regulation who have failed to comply with permit application or other program requirements. Any compilation, index or inventory of such facilities and activities shall be made available to the Regional Administrator upon request;

(2) A program for periodic inspections of the facilities and activities subject to regulation. These inspections shall be conducted in a manner designed to:

(i) Determine compliance or noncompliance with issued permit conditions and other program requirements;

(ii) Verify the accuracy of information submitted by permittees and other regulated persons in reporting forms and other forms supplying monitoring data; and

(iii) Verify the adequacy of sampling, monitoring, and other methods used by permittees and other regulated persons to develop that information;

(3) A program for investigating information obtained regarding violations of applicable program and permit requirements; and

(4) Procedures for receiving and ensuring proper consideration of information submitted by the Public about violations. Public effort in reporting violations shall be encouraged, and the State Director shall make available information on reporting procedures.

(c) The State Director and State officers engaged in compliance evaluation shall have authority to enter any site or premises subject to regulation or in which records relevant to program operation are kept in order to copy any records, inspect, monitor or otherwise investigate compliance with the State program including compliance with permit conditions and other program requirements. States whose law requires a search warrant before entry conform with this requirement.

(d) Investigatory inspections shall be conducted, samples shall be taken and other information shall be gathered in a manner (e.g., using proper ''chain of custody'' procedures) that will produce evidence admissible in an enforcement proceeding or in court.

(e) State NPDES compliance evaluation programs shall have procedures and ability for:

(1) Maintaining a comprehensive inventory of all sources covered by NPDES permits and a schedule of reports required to be submitted by permittees to the State agency;

(2) Initial screening (i.e., pre-enforcement evaluation) of all permit or grant-related compliance information to identify violations and to establish priorities for further substantive technical evaluation;

(3) When warranted, conducting a substantive technical evaluation following the initial screening of all permit or grant-related compliance information to determine the appropriate agency response;

(4) Maintaining a management information system which supports the compliance evaluation activities of this part; and

(5) Inspecting the facilities of all major dischargers and all Class I sludge management facilities (as defined in 40 CFR 501.2) where applicable at least annually.

[48 FR 14178, Apr. 1, 1983, as amended at 54 FR 18785, May 2, 1989]

§ 123.27 Requirements for enforcement authority.

(a) Any State agency administering a program shall have available the following remedies for violations of State program requirements:

(1) To restrain immediately and effectively any person by order or by suit in State court from engaging in any unauthorized activity which is endangering or causing damage to public health or the environment;

NOTE: This paragraph (a)(1) requires that States have a mechanism (e.g., an administrative cease and desist order or the ability to seek a temporary restraining order) to stop any unauthorized activity endangering public health or the environment.

(2) To sue in courts of competent jurisdiction to enjoin any threatened or continuing violation of any program requirement, including permit conditions, without the necessity of a prior revocation of the permit;

(3) To assess or sue to recover in court civil penalties and to seek criminal remedies, including fines, as follows:

(i) Civil penalties shall be recoverable for the violation of any NPDES

permit condition; any NPDES filing requirement; any duty to allow or carry out inspection, entry or monitoring activities; or, any regulation or orders issued by the State Director. These penalties shall be assessable in at least the amount of $5,000 a day for each violation.

(ii) Criminal fines shall be recoverable against any person who willfully or negligently violates any applicable standards or limitations; any NPDES permit condition; or any NPDES filing requirement. These fines shall be assessable in at least the amount of $10,000 a day for each violation.

NOTE: States which provide the criminal remedies based on ''criminal negligence,'' ''gross negligence'' or strict liability satisfy the requirement of paragraph (a)(3)(ii) of this section.

(iii) Criminal fines shall be recoverable against any person who knowingly makes any false statement, representation or certification in any NPDES form, in any notice or report required by an NPDES permit, or who knowingly renders inaccurate any monitoring device or method required to be maintained by the Director. These fines shall be recoverable in at least the amount of $5,000 for each instance of violation.

NOTE: In many States the State Director will be represented in State courts by the State Attorney General or other appropriate legal officer. Although the State Director need not appear in court actions he or she should have power to request that any of the above actions be brought.

(b)(1) The maximum civil penalty or criminal fine (as provided in paragraph (a)(3) of this section) shall be assessable for each instance of violation and, if the violation is continuous, shall be assessable up to the maximum amount for each day of violation.

(2) The burden of proof and degree of knowledge or intent required under State law for establishing violations under paragraph (a)(3) of this section, shall be no greater than the burden of proof or degree of knowledge or intent EPA must provide when it brings an action under the appropriate Act;

NOTE: For example, this requirement is not met if State law includes mental state as an element of proof for civil violations.

(c) A civil penalty assessed, sought, or agreed upon by the State Director under paragraph (a)(3) of this section shall be appropriate to the violation.

NOTE: To the extent that State judgments or settlements provide penalties in amounts which EPA believes to be substantially inadequate in comparison to the amounts which EPA would require under similar facts, EPA, when authorized by the applicable statute, may commence separate actions for penalties.

Procedures for assessment by the State of the cost of investigations, inspections, or monitoring surveys which lead to the establishment of violations;

In addition to the requirements of this paragraph, the State may have other enforcement remedies. The following enforcement options, while not mandatory, are highly recommended:

Procedures which enable the State to assess or to sue any persons responsible for unauthorized activities for any expenses incurred by the State in removing, correcting, or terminating any adverse effects upon human health and the environment resulting from the unauthorized activity, whether or not accidental;

Procedures which enable the State to sue for compensation for any loss or destruction of wildlife, fish or aquatic life, or their habitat, and for any other damages caused by unauthorized activity, either to the State or to any residents of the State who are directly aggrieved by the unauthorized activity, or both; and

Procedures for the administrative assessment of penalties by the Director.

(d) Any State administering a program shall provide for public participation in the State enforcement process by providing either:

(1) Authority which allows intervention as of right in any civil or administrative action to obtain remedies specified in paragraphs (a)(1), (2) or (3) of this section by any citizen having an interest which is or may be adversely affected; or

(2) Assurance that the State agency or enforcement authority will:

(i) Investigate and provide written responses to all citizen complaints submitted pursuant to the procedures specified in § 123.26(b)(4);

(ii) Not oppose intervention by any citizen when permissive intervention may be authorized by statute, rule, or regulation; and

(iii) Publish notice of and provide at least 30 days for public comment on

any proposed settlement of a State enforcement action.

(e) Indian Tribes that cannot satisfy the criminal enforcement authority requirements of this section may still receive program approval if they meet the requirement for enforcement authority established under § 123.34.

(Clean Water Act (33 U.S.C. 1251 *et seq.*), Safe Drinking Water Act (42 U.S.C. 300f *et seq.*), Clean Air Act (42 U.S.C. 7401 *et seq.*), Resource Conservation and Recovery Act (42 U.S.C. 6901 *et seq.*))

[48 FR 14178, Apr. 1, 1983, as amended at 48 FR 39620, Sept. 1, 1983; 50 FR 6941, Feb. 19, 1985; 54 FR 258, Jan. 4, 1989; 58 FR 67981, Dec. 22, 1993]

§ 123.28 Control of disposal of pollutants into wells.

State law must provide authority to issue permits to control the disposal of pollutants into wells. Such authority shall enable the State to protect the public health and welfare and to prevent the pollution of ground and surface waters by prohibiting well discharges or by issuing permits for such discharges with appropriate permit terms and conditions. A program approved under section 1422 of SDWA satisfies the requirements of this section.

NOTE: States which are authorized to administer the NPDES permit program under section 402 of CWA are encouraged to rely on existing statutory authority, to the extent possible, in developing a State UIC program under section 1422 of SDWA. Section 402(b)(1)(D) of CWA requires that NPDES States have the authority ''to issue permits which * * * control the disposal of pollutants into wells.'' In many instances, therefore, NPDES States will have existing statutory authority to regulate well disposal which satisfies the requirements of the UIC program. Note, however, that CWA excludes certain types of well injections from the definition of ''pollutant.'' If the State's statutory authority contains a similar exclusion it may need to be modified to qualify for UIC program approval.

§ 123.29 Prohibition.

State permit programs shall provide that no permit shall be issued when the Regional Administrator has objected in writing under § 123.44.

§ 123.30 Judicial review of approval or denial of permits.

All States that administer or seek to administer a program under this part shall provide an opportunity for judicial review in State Court of the final approval or denial of permits by the State that is sufficient to provide for, encourage, and assist public participation in the permitting process. A State will meet this standard if State law allows an opportunity for judicial review that is the same as that available to obtain judicial review in federal court of a federally-issued NPDES permit (see § 509 of the Clean Water Act). A State will not meet this standard if it narrowly restricts the class of persons who may challenge the approval or denial of permits (for example, if only the permittee can obtain judicial review, if persons must demonstrate injury to a pecuniary interest in order to obtain judicial review, or if persons must have a property interest in close proximity to a discharge or surface waters in order to obtain judicial review.) This requirement does not apply to Indian Tribes.

[61 FR 20980, May 8, 1996]

§ 123.31 Requirements for eligibility of Indian Tribes.

(a) Consistent with section 518(e) of the CWA, 33 U.S.C. 1377(e), the Regional Administrator will treat an Indian Tribe as eligible to apply for NPDES program authority if it meets the following criteria:

(1) The Indian Tribe is recognized by the Secretary of the Interior.

(2) The Indian Tribe has a governing body carrying out substantial governmental duties and powers.

(3) The functions to be exercised by the Indian Tribe pertain to the management and protection of water resources which are held by an Indian Tribe, held by the United States in trust for the Indians, held by a member of an Indian Tribe if such property interest is subject to a trust restriction on alienation, or otherwise within the borders of an Indian reservation.

(4) The Indian Tribe is reasonably expected to be capable, in the Regional Administrator's judgment, of carrying out the functions to be exercised, in a

manner consistent with the terms and purposes of the Act and applicable regulations, of an effective NPDES permit program.

(b) An Indian Tribe which the Regional Administrator determines meets the criteria described in paragraph (a) of this section must also satisfy the State program requirements described in this part for assumption of the State program.

[58 FR 67981, Dec. 22, 1993, as amended at 59 FR 64343, Dec. 14, 1994]

§ 123.32 Request by an Indian Tribe for a determination of eligibility.

An Indian Tribe may apply to the Regional Administrator for a determination that it qualifies pursuant to section 518 of the Act for purposes of seeking NPDES permit program approval. The application shall be concise and describe how the Indian Tribe will meet each of the requirements of § 123.31. The application shall include the following information:

(a) A statement that the Tribe is recognized by the Secretary of the Interior;

(b) A descriptive statement demonstrating that the Tribal governing body is currently carrying out substantial governmental duties and powers over a defined area. This statement should:

(1) Describe the form of the Tribal government;

(2) Describe the types of governmental functions currently performed by the Tribal governing body, such as, but not limited to, the exercise of police powers affecting (or relating to) the health, safety, and welfare of the affected population; taxation; and the exercise of the power of eminent domain; and

(3) Identify the source of the Tribal government's authority to carry out the governmental functions currently being performed.

(c) A map or legal description of the area over which the Indian Tribe asserts authority under section 518(e)(2) of the Act; a statement by the Tribal Attorney General (or equivalent official authorized to represent the Tribe in all legal matters in court pertaining to the program for which it seeks approval) which describes the basis for the Tribe's assertion (including the nature or subject matter of the asserted regulatory authority); copies of those documents such as Tribal constitutions, by-laws, charters, executive orders, codes, ordinances, and/or resolutions which support the Tribe believes are relevant to its assertion under section 518(e)(2) of the Act; and a description of the location of the surface waters for which the Tribe proposes to establish an NPDES permit program.

(d) A narrative statement describing the capability of the Indian Tribe to administer an effective, environmentally sound NPDES permit program. The statement should include:

(1) A description of the Indian Tribe's previous management experience which may include the administration of programs and service authorized by the Indian Self-Determination and Education Assistance Act (25 U.S.C. 450 *et seq.*), the Indian Mineral Development Act (25 U.S.C. 2101 *et seq.*), or the Indian Sanitation Facility Construction Activity Act (42 U.S.C. 2004a);

(2) A list of existing environmental or public health programs administered by the Tribal governing body, and a copy of related Tribal laws, regulations, and policies;

(3) A description of the entity (or entities) which exercise the executive, legislative, and judicial functions of the Tribal government;

(4) A description of the existing, or proposed, agency of the Indian Tribe which will assume primary responsibility for establishing and administering an NPDES permit program (including a description of the relationship between the existing or proposed agency and its regulated entities);

(5) A description of the technical and administrative abilities of the staff to administer and manage an effective, environmentally sound NPDES permit program or a plan which proposes how the Tribe will acquire additional administrative and technical expertise. The plan must address how the Tribe will obtain the funds to acquire the administrative and technical expertise.

(e) The Regional Administrator may, at his or her discretion, request further documentation necessary to support a Tribe's eligibility.

(f) If the Administrator or his or her delegatee has previously determined that a Tribe has met the prerequisites that make it eligible to assume a role similar to that of a state as provided by statute under the Safe Drinking Water Act, the Clean Water Act, or the Clean Air Act, then that Tribe need provide only that information unique to the NPDES program which is requested by the Regional Administrator.

[58 FR 67982, Dec. 22, 1993, as amended at 59 FR 64343, Dec. 14, 1994]

§ 123.33 Procedures for processing an Indian Tribe's application.

(a) The Regional Administrator shall process an application of an Indian Tribe submitted pursuant to § 123.32 in a timely manner. He shall promptly notify the Indian Tribe of receipt of the application.

(b) The Regional Administrator shall follow the procedures described in 40 CFR part 123, subpart D in processing a Tribe's request to assume the NPDES program.

[58 FR 67982, Dec. 22, 1993, as amended at 59 FR 64343, Dec. 14, 1994]

§ 123.34 Provisions for Tribal criminal enforcement authority.

To the extent that an Indian Tribe is precluded from asserting criminal enforcement authority as required under § 123.27, the Federal Government will exercise primary criminal enforcement responsibility. The Tribe, with the EPA Region, shall develop a procedure by which the Tribal agency will refer potential criminal violations to the Regional Administrator, as agreed to by the parties, in an appropriate and timely manner. This procedure shall encompass all circumstances in which the Tribe is incapable of exercising the enforcement requirements of § 123.27. This agreement shall be incorporated into a joint or separate Memorandum of Agreement with the EPA Region, as appropriate.

[58 FR 67983, Dec. 22, 1993]

Subpart C—Transfer of Information and Permit Review

§ 123.41 Sharing of information.

(a) Any information obtained or used in the administration of a State program shall be available to EPA upon request without restriction. If the information has been submitted to the State under a claim of confidentiality, the State must submit that claim to EPA when providing information under this section. Any information obtained from a State and subject to a claim of confidentiality will be treated in accordance with the regulations in 40 CFR part 2. If EPA obtains from a State information that is not claimed to be confidential, EPA may make that information available to the public without further notice.

(b) EPA shall furnish to States with approved programs the information in its files not submitted under a claim of confidentiality which the State needs to implement its approved program. EPA shall furnish to States with approved programs information submitted to EPA under a claim of confidentiality, which the State needs to implement its approved program, subject to the conditions in 40 CFR part 2.

§ 123.42 Receipt and use of Federal information.

Upon approving a State permit program, EPA shall send to the State agency administering the permit program any relevant information which was collected by EPA. The Memorandum of Agreement under § 123.24 shall provide for the following, in such manner as the State Director and the Regional Administrator shall agree:

(a) Prompt transmission to the State Director from the Regional Administrator of copies of any pending permit applications or any other relevant information collected before the approval of the State permit program and not already in the possession of the State Director. When existing permits are transferred to the State Director (e.g., for purposes of compliance monitoring, enforcement or reissuance), relevant information includes support files for

permit issuance, compliance reports and records of enforcement actions.

(b) Procedures to ensure that the State Director will not issue a permit on the basis of any application received from the Regional Administrator which the Regional Administrator identifies as incomplete or otherwise deficient until the State Director receives information sufficient to correct the deficiency.

§123.43 Transmission of information to EPA.

(a) Each State agency administering a permit program shall transmit to the Regional Administrator copies of permit program forms and any other relevant information to the extent and in the manner agreed to by the State Director and Regional Administrator in the Memorandum of Agreement and not inconsistent with this part. Proposed permits shall be prepared by State agencies unless agreement to the contrary has been reached under §123.44(j). The Memorandum of Agreement shall provide for the following:

(1) Prompt transmission to the Regional Administrator of a copy of all complete permit applications received by the State Director, except those for which permit review has been waived under §123.24(d). The State shall supply EPA with copies of permit applications for which permit review has been waived whenever requested by EPA;

(2) Prompt transmission to the Regional Administrator of notice of every action taken by the State agency related to the consideration of any permit application or general permit, including a copy of each proposed or draft permit and any conditions, requirements, or documents which are related to the proposed or draft permit or which affect the authorization of the proposed permit, except those for which permit review has been waived under §123.24(d). The State shall supply EPA with copies of notices for which permit review has been waived whenever requested by EPA; and

(3) Transmission to the Regional Administrator of a copy of every issued permit following issuance, along with any and all conditions, requirements, or documents which are related to or affect the authorization of the permit.

(b) [Reserved]

(c) The State program shall provide for transmission by the State Director to EPA of:

(1) Notices from publicly owned treatment works under §122.42(b) and 40 CFR part 403, upon request of the Regional Administrator;

(2) A copy of any significant comments presented in writing pursuant to the public notice of a draft permit and a summary of any significant comments presented at any hearing on any draft permit, except those comments regarding permits for which permit review has been waived under §123.24(d) and for which EPA has not otherwise requested receipt, if:

(i) The Regional Administrator requests this information; or

(ii) The proposed permit contains requirements significantly different from those contained in the tentative determination and draft permit; or

(iii) Significant comments objecting to the tentative determination and draft permit have been presented at the hearing or in writing pursuant to the public notice.

(d) Any State permit program shall keep such records and submit to the Administrator such information as the Administrator may reasonably require to ascertain whether the State program complies with the requirements of CWA or of this part.

[48 FR 14178, Apr. 1, 1983, as amended at 60 FR 33931, June 29, 1995]

§123.44 EPA review of and objections to State permits.

(a)(1) The Memorandum of Agreement shall provide a period of time (up to 90 days from receipt of proposed permits) to which the Regional Administrator may make general comments upon, objections to, or recommendations with respect to proposed permits. EPA reserves the right to take 90 days to supply specific grounds for objection, notwithstanding any shorter period specified in the Memorandum of Agreement, when a general objection is filed within the review period specified in the Memorandum of Agreement. The Regional Administrator shall send a copy of any comment, objection or recommendation to the permit applicant.

(2) In the case of general permits, EPA shall have 90 days from the date of receipt of the proposed general permit to comment upon, object to or make recommendations with respect to the proposed general permit, and is not bound by any shorter time limits set by the Memorandum of Agreement for general comments, objections or recommendations. The EPA Director, Office of Water Enforcement and Permits may comment upon, object to, or make recommendations with respect to proposed general permits, except those for separate storm sewers, on EPA's behalf.

(b)(1) Within the period of time provided under the Memorandum of Agreement for making general comments upon, objections to or recommendations with respect to proposed permits, the Regional Administrator shall notify the State Director of any objection to issuance of a proposed permit (except as provided in paragraph (a)(2) of this section for proposed general permits). This notification shall set forth in writing the general nature of the objection.

(2) Within 90 days following receipt of a proposed permit to which he or she has objected under paragraph (b)(1) of this section, or in the case of general permits within 90 days after receipt of the proposed general permit, the Regional Administrator, or in the case of general permits other than for separate storm sewers, the Regional Administrator or the EPA Director, Office of Water Enforcement and Permits, shall set forth in writing and transmit to the State Director:

(i) A statement of the reasons for the objection (including the section of CWA or regulations that support the objection), and

(ii) The actions that must be taken by the State Director to eliminate the objection (including the effluent limitations and conditions which the permit would include if it were issued by the Regional Administrator.)

NOTE: Paragraphs (a) and (b) of this section, in effect, modify any existing agreement between EPA and the State which provides less than 90 days for EPA to supply the specific grounds for an objection. However, when an agreement provides for an EPA review period of less than 90 days, EPA must file a general objection, in accordance with paragraph (b)(1) of this section within the time specified in the agreement. This general objection must be followed by a specific objection within the 90-day period. This modification to MOA's allows EPA to provide detailed information concerning acceptable permit conditions, as required by section 402(d) of CWA. To avoid possible confusion, MOA's should be changed to reflect this arrangement.

(c) The Regional Administrator's objection to the issuance of a proposed permit must be based upon one or more of the following grounds:

(1) The permit fails to apply, or to ensure compliance with, any applicable requirement of this part;

NOTE: For example, the Regional Administrator may object to a permit not requiring the achievement of required effluent limitations by applicable statutory deadlines.

(2) In the case of a proposed permit for which notification to the Administrator is required under section 402(b)(5) of CWA, the written recommendations of an affected State have not been accepted by the permitting State and the Regional Administrator finds the reasons for rejecting the recommendations are inadequate;

(3) The procedures followed in connection with formulation of the proposed permit failed in a material respect to comply with procedures required by CWA or by regulations thereunder or by the Memorandum of Agreement;

(4) Any finding made by the State Director in connection with the proposed permit misinterprets CWA or any guidelines or regulations under CWA, or misapplies them to the facts;

(5) Any provisions of the proposed permit relating to the maintenance of records, reporting, monitoring, sampling, or the provision of any other information by the permittee are inadequate, in the judgment of the Regional Administrator, to assure compliance with permit conditions, including effluent standards and limitations or standards for sewage sludge use and disposal required by CWA, by the guidelines and regulations issued under CWA, or by the proposed permit;

(6) In the case of any proposed permit with respect to which applicable effluent standards and limitations or standards for sewage sludge use and disposal

under sections 301, 302, 306, 307, 318, 403, and 405 of CWA have not yet been promulgated by the Agency, the proposed permit, in the judgment of the Regional Administrator, fails to carry out the provisions of CWA or of any regulations issued under CWA; the provisions of this paragraph apply to determinations made pursuant to § 125.3(c)(2) in the absence of applicable guidelines, to best management practices under section 304(e) of CWA, which must be incorporated into permits as requirements under section 301, 306, 307, 318, 403 or 405, and to sewage sludge use and disposal requirements developed on a case-by-case basis pursuant to section 405(d) of CWA, as the case may be;

(7) Issuance of the proposed permit would in any other respect be outside the requirements of CWA, or regulations issued under CWA.

(8) The effluent limits of a permit fail to satisfy the requirements of 40 CFR 122.44(d).

(9) For a permit issued by a Great Lakes State or Tribe (as defined in 40 CFR 132.2), the permit does not satisfy the conditions promulgated by the State, Tribe, or EPA pursuant to 40 CFR part 132.

(d) Prior to notifying the State Director of an objection based upon any of the grounds set forth in paragraph (b) of this section, the Regional Administrator:

(1) Shall consider all data transmitted pursuant to § 123.43;

(2) May, if the information provided is inadequate to determine whether the proposed permit meets the guidelines and requirements of CWA, request the State Director to transmit to the Regional Administrator the complete record of the permit proceedings before the State, or any portions of the record that the Regional Administrator determines are necessary for review. If this request is made within 30 days of receipt of the State submittal under § 123.43, it shall constitute an interim objection to the issuance of the permit, and the full period of time specified in the Memorandum of Agreement for the Regional Administrator's review shall recommence when the Regional Administrator has received such record or portions of the record; and

(3) May, in his or her discretion, and to the extent feasible within the period of time available under the Memorandum of Agreement, afford to interested persons an opportunity to comment on the basis for the objection;

(e) Within 90 days of receipt by the State Director of an objection by the Regional Administrator, the State or interstate agency or any interested person may request that a public hearing be held by the Regional Administrator on the objection. A public hearing in accordance with the procedures of § 124.12 (c) and (d) shall be held, and public notice provided in accordance with § 124.10, whenever requested by the State or the interstate agency which proposed the permit or if warranted by significant public interest based on requests received.

(f) A public hearing held under paragraph (e) of this section shall be conducted by the Regional Administrator, and, at the Regional Administrator's discretion, with the assistance of an EPA panel designated by the Regional Administrator, in an orderly and expeditious manner.

(g) Following the public hearing, the Regional Administrator shall reaffirm the original objection, modify the terms of the objection, or withdraw the objection, and shall notify the State of this decision.

(h)(1) If no public hearing is held under paragraph (e) of this section and the State does not resubmit a permit revised to meet the Regional Administrator's objection within 90 days of receipt of the objection, the Regional Administrator may issue the permit in accordance with parts 121, 122 and 124 of this chapter and any other guidelines and requirements of CWA.

(2) If a public hearing is held under paragraph (e) of this section, the Regional Administrator does not withdraw the objection, and the State does not resubmit a permit revised to meet the Regional Administrator's objection or modified objection within 30 days of the date of the Regional Administrator's notification under paragraph (g) of this section, the Regional Administrator may issue the permit in accordance with parts 121, 122 and 124 of this chapter and any other guidelines and requirements of CWA.

(3) Exclusive authority to issue the permit passes to EPA when the times set out in this paragraph expire.

(i) In the case of proposed general permits for discharges other than from separate storm sewers insert ''or the EPA Director, Office of Water Enforcement and Permits'' after ''Regional Administrator'' whenever it appears in paragraphs (c) through (h) of this section.

(j) The Regional Administrator may agree, in the Memorandum of Agreement under § 123.24, to review draft permits rather than proposed permits. In such a case, a proposed permit need not be prepared by the State and transmitted to the Regional Administrator for review in accordance with this section unless the State proposes to issue a permit which differs from the draft permit reviewed by the Regional Administrator, the Regional Administrator has objected to the draft permit, or there is significant public comment.

[48 FR 14178, Apr. 1, 1983, as amended at 54 FR 18785, May 2, 1989; 54 FR 23896, June 2, 1989; 60 FR 15386, Mar. 23, 1995]

§ 123.45 Noncompliance and program reporting by the Director.

The Director shall prepare quarterly, semi-annual, and annual reports as detailed below. When the State is the permit-issuing authority, the State Director shall submit all reports required under this section to the Regional Administrator, and the EPA Region in turn shall submit the State reports to EPA Headquarters. When EPA is the permit-issuing authority, the Regional Administrator shall submit all reports required under this section to EPA Headquarters.

(a) *Quarterly reports.* The Director shall submit quarterly narrative reports for major permittees as follows:

(1) *Format.* The report shall use the following format:

(i) Provide a separate list of major NPDES permittees which shall be subcategorized as non-POTWs, POTWs, and Federal permittees.

(ii) Alphabetize each list by permittee name. When two or more permittees have the same name, the permittee with the lowest permit number shall be entered first.

(iii) For each permittee on the list, include the following information in the following order:

(A) The name, location, and permit number.

(B) A brief description and date of each instance of noncompliance for which paragraph (a)(2) of this section requires reporting. Each listing shall indicate each specific provision of paragraph (a)(2) (e.g., (ii)(A) thru (iii)(G)) which describes the reason for reporting the violation on the quarterly report.

(C) The date(s), and a brief description of the action(s) taken by the Director to ensure compliance.

(D) The status of the instance(s) of noncompliance and the date noncompliance was resolved.

(E) Any details which tend to explain or mitigate the instance(s) of noncompliance.

(2) *Instances of noncompliance by major dischargers to be reported*—(i) *General.* Instances of noncompliance, as defined in paragraphs (a)(2)(ii) and (iii) of this section, by major dischargers shall be reported in successive reports until the noncompliance is reported as resolved (i.e., the permittee is no longer violating the permit conditions reported as noncompliance in the QNCR). Once an instance of noncompliance is reported as resolved in the QNCR, it need not appear in subsequent reports.

(A) All reported violations must be listed on the QNCR for the reporting period when the violation occurred, even if the violation is resolved during that reporting period.

(B) All permittees under current enforcement orders (i.e., administrative and judicial orders and consent decrees) for previous instances of noncompliance must be listed in the QNCR until the orders have been satisfied in full and the permittee is in compliance with permit conditions. If the permittee is in compliance with the enforcement order, but has not achieved full compliance with permit conditions, the compliance status shall be reported as ''resolved pending,'' but the permittee will continue to be listed on the QNCR.

(ii) *Category I noncompliance.* The following instances of noncompliance by major dischargers are Category I noncompliance:

(A) Violations of conditions in enforcement orders except compliance schedules and reports.

(B) Violations of compliance schedule milestones for starting construction, completing construction, and attaining final compliance by 90 days or more from the date of the milestone specified in an enforcement order or a permit.

(C) Violations of permit effluent limits that exceed the Appendix A ''Criteria for Noncompliance Reporting in the NPDES Program''.

(D) Failure to provide a compliance schedule report for final compliance or a monitoring report. This applies when the permittee has failed to submit a final compliance schedule progress report, pretreatment report, or a Discharge Monitoring Report within 30 days from the due date specified in an enforcement order or a permit.

(iii) *Category II noncompliance.* Category II noncompliance includes violations of permit conditions which the Agency believes to be of substantial concern and may not meet the Category I criteria. The following are instances of noncompliance which must be reported as Category II noncompliance unless the same violation meets the criteria for Category I noncompliance:

(A) (*1*) Violation of a permit limit;

(*2*) An unauthorized bypass;

(*3*) An unpermitted discharge; or

(*4*) A pass-through of pollutants which causes or has the potential to cause a water quality problem (e.g., fish kills, oil sheens) or health problems (e.g., beach closings, fishing bans, or other restrictions of beneficial uses).

(B) Failure of an approved POTW to implement its approved pretreatment program adequately including failure to enforce industrial pretreatment requirements on industrial users as required in the approved program.

(C) Violations of any compliance schedule milestones (except those milestones listed in paragraph (a)(2)(ii)(B) of this section) by 90 days or more from the date specified in an enforcement order or a permit.

(D) Failure of the permittee to provide reports (other than those reports listed in paragraph (a)(2)(ii)(D) of this section) within 30 days from the due date specified in an enforcement order or a permit.

(E) Instances when the required reports provided by the permittee are so deficient or incomplete as to cause misunderstanding by the Director and thus impede the review of the status of compliance.

(F) Violations of narrative requirements (e.g., requirements to develop Spill Prevention Control and Countermeasure Plans and requirements to implement Best Management Practices), which are of substantial concern to the regulatory agency.

(G) Any other violation or group of permit violations which the Director or Regional Administrator considers to be of substantial concern.

(b) *Semi-annual statistical summary report.* Summary information shall be provided twice a year on the number of major permittees with two or more violations of the same monthly average permit limitation in a six month period, including those otherwise reported under paragraph (a) of this section. This report shall be submitted at the same time, according to the Federal fiscal year calendar, as the first and third quarter QNCRs.

(c) *Annual reports for NPDES*—(1) *Annual noncompliance report.* Statistical reports shall be submitted by the Director on nonmajor NPDES permittees indicating the total number reviewed, the number of noncomplying nonmajor permittees, the number of enforcement actions, and number of permit modifications extending compliance deadlines. The statistical information shall be organized to follow the types of noncompliance listed in paragraph (a) of this section.

(2) A separate list of nonmajor discharges which are one or more years behind in construction phases of the compliance schedule shall also be submitted in alphabetical order by name and permit number.

(d) *Schedule*—(1) *For all quarterly reports.* On the last working day of May, August, November, and February, the State Director shall submit to the Regional Administrator information concerning noncompliance with NPDES permit requirements by major dischargers in the State in acordance with the following schedule. The Regional

Administrator shall prepare and submit information for EPA-issued permits to EPA Headquarters in accordance with the same schedule:

QUARTERS COVERED BY REPORTS ON NONCOMPLIANCE BY MAJOR DISCHARGERS:

[Date for completion of reports]

January, February, and March	[1] May 31
April, May, and June	[1] August 31
July, August, and September	[1] November 30
October, November, and December	[1] February 28

[1] Reports must be made available to the public for inspection and copying on this date.

(2) *For all annual reports.* The period for annual reports shall be for the calendar year ending December 31, with reports completed and available to the public no more than 60 days later.

(e) *Sludge noncompliance program reports.* The Director shall prepare and submit semi-annual noncompliance and annual program reports as required under 40 CFR 501.21. The Director may include this information in reports submitted in accordance with paragraphs (a) through (d) of this section.

(Approved by the Office of Management and Budget under control number 2040–0082)

[48 FR 14178, Apr. 1, 1983, as amended at 50 FR 34653, Aug. 26, 1985; 54 FR 18785, May 2, 1989]

APPENDIX A TO § 123.45—CRITERIA FOR NONCOMPLIANCE REPORTING IN THE NPDES PROGRAM

This appendix describes the criteria for reporting violations of NPDES permit effluent limits in the quarterly noncompliance report (QNCR) as specified under § 123.45(a)(2)(ii)(c). Any violation of an NPDES permit is a violation of the Clean Water Act (CWA) for which the permittee is liable. An agency's decision as to what enforcement action, if any, should be taken in such cases, will be based on an analysis of facts and legal requirements.

Violations of Permit Effluent Limits

Cases in which violations of permit effluent limits must be reported depend upon the magnitude and/or frequency of the violation. Effluent violations should be evaluated on a parameter-by-parameter and outfall-by-outfall basis. The criteria for reporting effluent violations are as follows:

a. Reporting Criteria for Violations of Monthly Average Permit Limits—Magnitude and Frequency

Violations of monthly average effluent limits which exceed or equal the product of the Technical Review Criteria (TRC) times the effluent limit, and occur two months in a six month period must be reported. TRCs are for two groups of pollutants.

Group I Pollutants—TRC=1.4
Group II Pollutants—TRC=1.2

b. Reporting Criteria for Chronic Violations of Monthly Average Limits

Chronic violations must be reported in the QNCR if the monthly average permit limits are exceeded any four months in a six-month period. These criteria apply to all Group I and Group II pollutants.

GROUP I POLLUTANTS—TRC=1.4

Oxygen Demand

Biochemical Oxygen Demand
Chemical Oxygen Demand
Total Oxygen Demands
Total Organic Carbon
Other

Solids

Total Suspended Solids (Residues)
Total Dissolved Solids (Residues)
Other

Nutrients

Inorganic Phosphorus Compounds
Inorganic Nitrogen Compounds
Other

Detergents and Oils

MBAS
NTA
Oil and Grease
Other detergents or algicides

Minerals

Calcium
Chloride
Fluoride
Magnesium
Sodium
Potassium
Sulfur
Sulfate
Total Alkalinity
Total Hardness
Other Minerals

Metals

Aluminum
Cobalt
Iron
Vanadium

GROUP II POLLUTANTS—TRC=1.2

METALS (ALL FORMS)

Other metals not specifically listed under Group I

Inorganic

Cyanide
Total Residual Chlorine

Organics

All organics are Group II except those specifically listed under Group I.

[50 FR 34654, Aug. 26, 1985]

§ 123.46 Individual control strategies.

(a) Not later than February 4, 1989, each State shall submit to the Regional Administrator for review, approval, and implementation an individual control strategy for each point source identified by the State pursuant to section 304(l)(1)(C) of the Act which discharges to a water identified by the State pursuant to section 304(l)(1)(B) which will produce a reduction in the discharge of toxic pollutants from the point sources identified under section 304(l)(1)(C) through the establishment of effluent limitations under section 402 of the CWA and water quality standards under section 303(c)(2)(B) of the CWA, which reduction is sufficient, in combination with existing controls on point and nonpoint sources of pollution, to achieve the applicable water quality standard as soon as possible, but not later than three years after the date of establishment of such strategy.

(b) The Administrator shall approve or disapprove the control strategies submitted by any State pursuant to paragraph (a) of this section, not later than June 4, 1989. If a State fails to submit control strategies in accordance with paragraph (a) of this section or the Administrator does not approve the control strategies submitted by such State in accordance with paragraph (a), then, not later than June 4, 1990, the Administrator in cooperation with such State and after notice and opportunity for public comment, shall implement the requirements of CWA section 304(l)(1) in such State. In the implementation of such requirements, the Administrator shall, at a minimum, consider for listing under CWA section 304(l)(1) any navigable waters for which any person submits a petition to the Administrator for listing not later than October 1, 1989.

(c) For the purposes of this section the term individual control strategy, as set forth in section 304(l) of the CWA, means a final NPDES permit with supporting documentation showing that effluent limits are consistent with an approved wasteload allocation, or other documentation which shows that applicable water quality standards will be met not later than three years after the individual control strategy is established. Where a State is unable to issue a final permit on or before February 4, 1989, an individual control strategy may be a draft permit with an attached schedule (provided the State meets the schedule for issuing the final permit) indicating that the permit will be issued on or before February 4, 1990. If a point source is subject to section 304(l)(1)(C) of the CWA and is also subject to an on-site response action under sections 104 or 106 of the Comprehensive Environmental Response, Compensation, and Liability Act of 1980 (CERCLA), (42 U.S.C. 9601 *et seq.*), an individual control strategy may be the decision document (which incorporates the applicable or relevant and appropriate requirements under the CWA) prepared under sections 104 or 106 of CERCLA to address the release or threatened release of hazardous substances to the environment.

(d) A petition submitted pursuant to section 304(l)(3) of the CWA must be submitted to the appropriate Regional Administrator. Petitions must identify a waterbody in sufficient detail so that EPA is able to determine the location and boundaries of the waterbody. The petition must also identify the list or lists for which the waterbody qualifies, and the petition must explain why the waterbody satisfies the criteria for listing under CWA section 304(l) and 40 CFR 130.10(d)(6).

(e) If the Regional Administrator disapproves one or more individual control strategies, or if a State fails to provide adequate public notice and an opportunity to comment on the ICSs, then, not later than June 4, 1989, the Regional Administrator shall give a notice of approval or disapproval of the individual control strategies submitted by each State pursuant to this section as follows:

(1) The notice of approval or disapproval given under this paragraph shall include the following:

(i) The name and address of the EPA office that reviews the State's submittals.

(ii) A brief description of the section 304(l) process.

(iii) A list of ICSs disapproved under this section and a finding that the ICSs will not meet all applicable review criteria under this section and section 304(l) of the CWA.

(iv) If the Regional Administrator determines that a State did not provide adequate public notice and an opportunity to comment on the waters, point sources, or ICSs prepared pursuant to section 304(l), or if the Regional Administrator chooses to exercise his or her discretion, a list of the ICSs approved under this section, and a finding that the ICSs satisfy all applicable review criteria.

(v) The location where interested persons may examine EPA's records of approval and disapproval.

(vi) The name, address, and telephone number of the person at the Regional Office from whom interested persons may obtain more information.

(vii) Notice that written petitions or comments are due within 120 days.

(2) The Regional Administrator shall provide the notice of approval or disapproval given under this paragraph to the appropriate State Director. The Regional Administrator shall publish a notice of availability, in a daily or weekly newspaper with State-wide circulation or in the FEDERAL REGISTER, for the notice of approval or disapproval. The Regional Administrator shall also provide written notice to each discharger identified under section 304(l)(1)(C), that EPA has listed the discharger under section 304(l)(1)(C).

(3) As soon as practicable but not later than June 4, 1990, the Regional Offices shall issue a response to petitions or comments received under section 304(l). The response to comments shall be given in the same manner as the notice described in paragraph (e) of this section except for the following changes:

(i) The lists of ICSs reflecting any changes made pursuant to comments or petitions received.

(ii) A brief description of the subsequent steps in the section 304(l) process.

(f) EPA shall review, and approve or disapprove, the individual control strategies prepared under section 304(l) of the CWA, using the applicable criteria set forth in section 304(l) of the CWA, and in 40 CFR part 122, including § 122.44(d). At any time after the Regional Administrator disapproves an ICS (or conditionally aproves a draft permit as an ICS), the Regional Office may submit a written notification to the State that the Regional Office intends to issue the ICS. Upon mailing the notification, and notwithstanding any other regulation, exclusive authority to issue the permit passes to EPA.

[54 FR 256, Jan. 4, 1989, as amended at 54 FR 23896, June 2, 1989; 57 FR 33049, July 24, 1992]

Subpart D—Program Approval, Revision, and Withdrawal

§ 123.61 Approval process.

(a) After determining that a State program submission is complete, EPA shall publish notice of the State's application in the FEDERAL REGISTER, and in enough of the largest newspapers in the State to attract statewide attention, and shall mail notice to persons known to be interested in such matters, including all persons on appropriate State and EPA mailing lists and all permit holders and applicants within the State. The notice shall:

(1) Provide a comment period of not less than 45 days during which interested members of the public may express their views on the State program;

(2) Provide for a public hearing within the State to be held no less than 30 days after notice is published in the FEDERAL REGISTER;

(3) Indicate the cost of obtaining a copy of the State's submission;

(4) Indicate where and when the State's submission may be reviewed by the public;

(5) Indicate whom an interested member of the public should contact with any questions; and

(6) Briefly outline the fundamental aspects of the State's proposed program, and the process for EPA review and decision.

(b) Within 90 days of the receipt of a complete program submission under § 123.21 the Administrator shall approve or disapprove the program based on the requirements of this part and of CWA and taking into consideration all comments received. A responsiveness summary shall be prepared by the Regional Office which identifies the public participation activities conducted, describes the matters presented to the public, summarizes significant comments received and explains the Agency's response to these comments.

(c) If the Administrator approves the State's program he or she shall notify the State and publish notice in the FEDERAL REGISTER. The Regional Administrator shall suspend the issuance of permits by EPA as of the date of program approval.

(d) If the Administrator disapproves the State program he or she shall notify the State of the reasons for disapproval and of any revisions or modifications to the State program which are necessary to obtain approval.

[48 FR 14178, Apr. 1, 1983; 50 FR 6941, Feb. 19, 1985]

§ 123.62 Procedures for revision of State programs.

(a) Either EPA or the approved State may initiate program revision. Program revision may be necessary when the controlling Federal or State statutory or regulatory authority is modified or supplemented. The State shall keep EPA fully informed of any proposed modifications to its basic statutory or regulatory authority, its forms, procedures, or priorities. Grounds for program revision include cases where a State's existing approved program includes authority to issue NPDES permits for activities on a Federal Indian reservation and an Indian Tribe has subsequently been approved for assumption of the NPDES program under 40 CFR part 123 extending to those lands.

(b) Revision of a State program shall be accomplished as follows:

(1) The State shall submit a modified program description, Attorney General's statement, Memorandum of Agreement, or such other documents as EPA determines to be necessary under the circumstances.

(2) Whenever EPA determines that the proposed program revision is substantial, EPA shall issue public notice and provide an opportunity to comment for a period of at least 30 days. The public notice shall be mailed to interested persons and shall be published in the FEDERAL REGISTER and in enough of the largest newspapers in the State to provide Statewide coverage. The public notice shall summarize the proposed revisions and provide for the opportunity to request a public hearing. Such a hearing will be held if there is significant public interest based on requests received.

(3) The Administrator shall approve or disapprove program revisions based on the requirements of this part and of the CWA.

(4) A program revision shall become effective upon the approval of the Administrator. Notice of approval of any substantial revision shall be published in the FEDERAL REGISTER. Notice of approval of non-substantial program revisions may be given by a letter from the Administrator to the State Governor or his designee.

(c) States with approved programs shall notify EPA whenever they propose to transfer all or part of any program from the approved State agency to any other State agency, and shall identify any new division of responsibilities among the agencies involved. The new agency is not authorized to administer the program until approved by the Administrator under paragraph (b) of this section. Organizational charts required under § 123.22(b) shall be revised and resubmitted.

(d) Whenever the Administrator has reason to believe that circumstances have changed with respect to a State program, he may request, and the State shall provide, a supplemental Attorney General's statement, program description, or such other documents or information as are necessary.

(e) *State NPDES programs only*. All new programs must comply with these

regulations immediately upon approval. Any approved State section 402 permit program which requires revision to conform to this part shall be so revised within one year of the date of promulgation of these regulations, unless a State must amend or enact a statute in order to make the required revision in which case such revision shall take place within 2 years, except that revision of State programs to implement the requirements of 40 CFR part 403 (pretreatment) shall be accomplished as provided in 40 CFR 403.10. In addition, approved States shall submit, within 6 months, copies of their permit forms for EPA review and approval. Approved States shall also assure that permit applicants, other than POTWs, submit, as part of their application, the information required under §§ 124.4(d) and 122.21 (g) or (h), as appropriate.

(f) Revision of a State program by a Great Lakes State or Tribe (as defined in 40 CFR 132.2) to conform to section 118 of the CWA and 40 CFR part 132 shall be accomplished pursuant to 40 CFR part 132.

[48 FR 14178, Apr. 1, 1983, as amended at 49 FR 31842, Aug. 8, 1984; 50 FR 6941, Feb. 19, 1985; 53 FR 33007, Sept. 6, 1988; 58 FR 67983, Dec. 22, 1993; 60 FR 15386, Mar. 23, 1995]

§ 123.63 Criteria for withdrawal of State programs.

(a) The Administrator may withdraw program approval when a State program no longer complies with the requirements of this part, and the State fails to take corrective action. Such circumstances include the following:

(1) Where the State's legal authority no longer meets the requirements of this part, including:

(i) Failure of the State to promulgate or enact new authorities when necessary; or

(ii) Action by a State legislature or court striking down or limiting State authorities.

(2) Where the operation of the State program fails to comply with the requirements of this part, including:

(i) Failure to exercise control over activities required to be regulated under this part, including failure to issue permits;

(ii) Repeated issuance of permits which do not conform to the requirements of this part; or

(iii) Failure to comply with the public participation requirements of this part.

(3) Where the State's enforcement program fails to comply with the requirements of this part, including:

(i) Failure to act on violations of permits or other program requirements;

(ii) Failure to seek adequate enforcement penalties or to collect administrative fines when imposed; or

(iii) Failure to inspect and monitor activities subject to regulation.

(4) Where the State program fails to comply with the terms of the Memorandum of Agreement required under § 123.24.

(5) Where the State fails to develop an adequate regulatory program for developing water quality-based effluent limits in NPDES permits.

(6) Where a Great Lakes State or Tribe (as defined in 40 CFR 132.2) fails to adequately incorporate the NPDES permitting implementation procedures promulgated by the State, Tribe, or EPA pursuant to 40 CFR part 132 into individual permits.

(b) [Reserved]

[48 FR 14178, Apr. 1, 1983; 50 FR 6941, Feb. 19, 1985, as amended at 54 FR 23897, June 2, 1989; 60 FR 15386, Mar. 23, 1995]

§ 123.64 Procedures for withdrawal of State programs.

(a) A State with a program approved under this part may voluntarily transfer program responsibilities required by Federal law to EPA by taking the following actions, or in such other manner as may be agreed upon with the Administrator.

(1) The State shall give the Administrator 180 days notice of the proposed transfer and shall submit a plan for the orderly transfer of all relevant program information not in the possession of EPA (such as permits, permit files, compliance files, reports, permit applications) which are necessary for EPA to administer the program.

(2) Within 60 days of receiving the notice and transfer plan, the Administrator shall evaluate the State's transfer plan and shall identify any additional information needed by the Federal government for program administration and/or identify any other deficiencies in the plan.

(3) At least 30 days before the transfer is to occur the Administrator shall publish notice of the transfer in the FEDERAL REGISTER and in enough of the largest newspapers in the State to provide Statewide coverage, and shall mail notice to all permit holders, permit applicants, other regulated persons and other interested persons on appropriate EPA and State mailing lists.

(b) The following procedures apply when the Administrator orders the commencement of proceedings to determine whether to withdraw approval of a State program.

(1) *Order.* The Administrator may order the commencement of withdrawal proceedings on his or her own initiative or in response to a petition from an interested person alleging failure of the State to comply with the requirements of this part as set forth in § 123.63. The Administrator shall respond in writing to any petition to commence withdrawal proceedings. He may conduct an informal investigation of the allegations in the petition to determine whether cause exists to commence proceedings under this paragraph. The Administrator's order commencing proceedings under this paragraph shall fix a time and place for the commencement of the hearing and shall specify the allegations against the State which are to be considered at the hearing. Within 30 days the State shall admit or deny these allegations in a written answer. The party seeking withdrawal of the State's program shall have the burden of coming forward with the evidence in a hearing under this paragraph.

(2) *Definitions.* For purposes of this paragraph the definitions of ''Act,'' ''Administrative Law Judge,'' ''Hearing Clerk,'' and ''Presiding Officer'' in 40 CFR 22.03 apply in addition to the following:

(i) *Party* means the petitioner, the State, the Agency, and any other person whose request to participate as a party is granted.

(ii) *Person* means the Agency, the State and any individual or organization having an interest in the subject matter of the proceeding.

(iii) *Petitioner* means any person whose petition for commencement of withdrawal proceedings has been granted by the Administrator.

(3) *Procedures.* (i) The following provisions of 40 CFR part 22 (Consolidated Rules of Practice) are applicable to proceedings under this paragraph:

(A) § 22.02—(use of number/gender);

(B) § 22.04(c)—(authorities of Presiding Officer);

(C) § 22.06—(filing/service of rulings and orders);

(D) § 22.09—(examination of filed documents);

(E) § 22.19(a), (b) and (c)—(prehearing conference);

(F) § 22.22—(evidence);

(G) § 22.23—(objections/offers of proof);

(H) § 22.25—(filing the transcript); and

(I) § 22.26—(findings/conclusions).

(ii) The following provisions are also applicable:

(A) *Computation and extension of time*—(*1*) *Computation.* In computing any period of time prescribed or allowed in these rules of practice, except as otherwise provided, the day of the event from which the designated period begins to run shall not be included. Saturdays, Sundays, and Federal legal holidays shall be included. When a stated time expires on a Saturday, Sunday, or legal holiday, the stated time period shall be extended to include the next business day.

(*2*) *Extensions of time.* The Administrator, Regional Administrator, or Presiding Officer, as appropriate, may grant an extension of time for the filing of any pleading, document, or motion (*i*) upon timely motion of a party to the proceeding, for good cause shown, and after consideration of prejudice to other parties, or (*ii*) upon his own motion. Such a motion by a party may only be made after notice to all other parties, unless the movant can show good cause why serving notice is impracticable. The motion shall be filed in advance of the date on which the pleading, document or motion is due to be filed, unless the failure of a

party to make timely motion for extension of time was the result of excusable neglect.

(*3*) The time for commencement of the hearing shall not be extended beyond the date set in the Administrator's order without approval of the Administrator.

(B) *Ex parte discussion of proceedings.* At no time after the issuance of the order commencing proceedings shall the Administrator, the Regional Administrator, the Regional Judicial Officer, the Presiding Officer, or any other person who is likely to advise these officials in the decision on the case, discuss ex parte the merits of the proceeding with any interested person outside the Agency, with any Agency staff member who performs a prosecutorial or investigative function in such proceeding or a factually related proceeding, or with any representative of such person. Any ex parte memorandum or other communication addressed to the Administrator, the Regional Administrator, the Regional Judicial Officer, or the Presiding Officer during the pendency of the proceeding and relating to the merits thereof, by or on behalf of any party, shall be regarded as argument made in the proceeding and shall be served upon all other parties. The other parties shall be given an opportunity to reply to such memorandum or communication.

(C) *Intervention—(1) Motion.* A motion for leave to intervene in any proceeding conducted under these rules of practice must set forth the grounds for the proposed intervention, the position and interest of the movant and the likely impact that intervention will have on the expeditious progress of the proceeding. Any person already a party to the proceeding may file an answer to a motion to intervene, making specific reference to the factors set forth in the foregoing sentence and paragraph (b)(3)(ii)(C)(*3*) of this section, within ten (10) days after service of the motion for leave to intervene.

(*2*) However, motions to intervene must be filed within 15 days from the date the notice of the Administrator's order is first published.

(*3*) *Disposition.* Leave to intervene may be granted only if the movant demonstrates that (*i*) his presence in the proceeding would not unduly prolong or otherwise prejudice that adjudication of the rights of the original parties; (*ii*) the movant will be adversely affected by a final order; and (*iii*) the interests of the movant are not being adequately represented by the original parties. The intervenor shall become a full party to the proceeding upon the granting of leave to intervene.

(*4*) *Amicus curiae.* Persons not parties to the proceeding who wish to file briefs may so move. The motion shall identify the interest of the applicant and shall state the reasons why the proposed amicus brief is desirable. If the motion is granted, the Presiding Officer or Administrator shall issue an order setting the time for filing such brief. An amicus curiae is eligible to participate in any briefing after his motion is granted, and shall be served with all briefs, reply briefs, motions, and orders relating to issues to be briefed.

(D) *Motions—(1) General.* All motions, except those made orally on the record during a hearing, shall (*i*) be in writing; (*ii*) state the grounds therefor with particularity; (*iii*) set forth the relief or order sought; and (*iv*) be accompanied by any affidavit, certificate, other evidence, or legal memorandum relied upon. Such motions shall be served as provided by paragraph (b)(4) of this section.

(*2*) *Response to motions.* A party's response to any written motion must be filed within ten (10) days after service of such motion, unless additional time is allowed for such response. The response shall be accompanied by any affidavit, certificate, other evidence, or legal memorandum relied upon. If no response is filed within the designated period, the parties may be deemed to have waived any objection to the granting of the motion. The Presiding Officer, Regional Administrator, or Administrator, as appropriate, may set a shorter time for response, or make such other orders concerning the disposition of motions as they deem appropriate.

(*3*) *Decision.* The Administrator shall rule on all motions filed or made after service of the recommended decision upon the parties. The Presiding Officer

shall rule on all other motions. Oral argument on motions will be permitted where the Presiding Officer, Regional Administrator, or the Administrator considers it necessary or desirable.

(4) *Record of proceedings.* (i) The hearing shall be either stenographically reported verbatim or tape recorded, and thereupon transcribed by an official reporter designated by the Presiding Officer;

(ii) All orders issued by the Presiding Officer, transcripts of testimony, written statements of position, stipulations, exhibits, motions, briefs, and other written material of any kind submitted in the hearing shall be a part of the record and shall be available for inspection or copying in the Office of the Hearing Clerk, upon payment of costs. Inquiries may be made at the Office of the Administrative Law Judges, Hearing Clerk, 401 M Street, SW., Washington, DC 20460;

(iii) Upon notice to all parties the Presiding Officer may authorize corrections to the transcript which involves matters of substance;

(iv) An original and two (2) copies of all written submissions to the hearing shall be filed with the Hearing Clerk;

(v) A copy of each submission shall be served by the person making the submission upon the Presiding Officer and each party of record. Service under this paragraph shall take place by mail or personal delivery;

(vi) Every submission shall be accompanied by an acknowledgement of service by the person served or proof of service in the form of a statement of the date, time, and manner of service and the names of the persons served, certified by the person who made service, and;

(vii) The Hearing Clerk shall maintain and furnish to any person upon request, a list containing the name, service address, and telephone number of all parties and their attorneys or duly authorized representatives.

(5) *Participation by a person not a party.* A person who is not a party may, in the discretion of the Presiding Officer, be permitted to make a limited appearance by making oral or written statement of his/her position on the issues within such limits and on such conditions as may be fixed by the Presiding Officer, but he/she may not otherwise participate in the proceeding.

(6) *Rights of parties.* (i) All parties to the proceeding may:

(A) Appear by counsel or other representative in all hearing and pre-hearing proceedings;

(B) Agree to stipulations of facts which shall be made a part of the record.

(7) *Recommended decision.* (i) Within 30 days after the filing of proposed findings and conclusions, and reply briefs, the Presiding Officer shall evaluate the record before him/her, the proposed findings and conclusions and any briefs filed by the parties and shall prepare a recommended decision, and shall certify the entire record, including the recommended decision, to the Administrator.

(ii) Copies of the recommended decision shall be served upon all parties.

(iii) Within 20 days after the certification and filing of the record and recommended decision, all parties may file with the Administrator exceptions to the recommended decision and a supporting brief.

(8) *Decision by Administrator.* (i) Within 60 days after the certification of the record and filing of the Presiding Officer's recommeded decision, the Administrator shall review the record before him and issue his own decision.

(ii) If the Administrator concludes that the State has administered the program in conformity with the appropriate Act and regulations his decision shall constitute ''final agency action'' within the meaning of 5 U.S.C. 704.

(iii) If the Administrator concludes that the State has not administered the program in conformity with the appropriate Act and regulations he shall list the deficiencies in the program and provide the State a reasonable time, not to exceed 90 days, to take such appropriate corrective action as the Administrator determines necessary.

(iv) Within the time prescribed by the Administrator the State shall take such appropriate corrective action as required by the Administrator and shall file with the Administrator and all parties a statement certified by the State Director that such appropriate corrective action has been taken.

(v) The Administrator may require a further showing in addition to the certified statement that corrective action has been taken.

(vi) If the State fails to take such appropriate corrective action and file a certified statement thereof within the time prescribed by the Administrator, the Administrator shall issue a supplementary order withdrawing approval of the State program. If the State takes such appropriate corrective action, the Administrator shall issue a supplementary order stating that approval of authority is not withdrawn.

(vii) The Administrator's supplementary order shall constitute final Agency action within the meaning of 5 U.S.C. 704.

(viii) Withdrawal of authorization under this section and the appropriate Act does not relieve any person from complying with the requirements of State law, nor does it affect the validity of actions by the State prior to withdrawal.

[48 FR 14178, Apr. 1, 1983; 50 FR 6941, Feb. 19, 1985, as amended at 57 FR 5335, Feb. 13, 1992]

PART 124—PROCEDURES FOR DECISIONMAKING

Subpart A—General Program Requirements

Sec.
124.1 Purpose and scope.
124.2 Definitions.
124.3 Application for a permit.
124.4 Consolidation of permit processing.
124.5 Modification, revocation and reissuance, or termination of permits.
124.6 Draft permits.
124.7 Statement of basis.
124.8 Fact sheet.
124.9 Administrative record for draft permits when EPA is the permitting authority.
124.10 Public notice of permit actions and public comment period.
124.11 Public comments and requests for public hearings.
124.12 Public hearings.
124.13 Obligation to raise issues and provide information during the public comment period.
124.14 Reopening of the public comment period.
124.15 Issuance and effective date of permit.
124.16 Stays of contested permit conditions.
124.17 Response to comments.
124.18 Administrative record for final permit when EPA is the permitting authority.
124.19 Appeal of RCRA, UIC and PSD permits.
124.20 Computation of time.
124.21 Effective date of part 124.

Subpart B—Specific Procedures Applicable to RCRA Permits

124.31 Pre-application public meeting and notice.
124.32 Public notice requirements at the application stage.
124.33 Information repository.

Subpart C—Specific Procedures Applicable to PSD Permits

124.41 Definitions applicable to PSD permits.
124.42 Additional procedures for PSD permits affecting Class I areas.

Subpart D—Specific Procedures Applicable to NPDES Permits

124.51 Purpose and scope.
124.52 Permits required on a case-by-case basis.
124.53 State certification.
124.54 Special provisions for State certification and concurrence on applications for section 301(h) variances.
124.55 Effect of State certification.
124.56 Fact sheets.
124.57 Public notice.
124.58 [Reserved]
124.59 Conditions requested by the Corps of Engineers and other government agencies.
124.60 Issuance and effective date and stays of NPDES permits.
124.61 Final environmental impact statement.
124.62 Decision on variances.
124.63 Procedures for variances when EPA is the permitting authority.
124.64 Appeals of variances.
124.65 [Reserved]
124.66 Special procedures for decisions on thermal variances under section 316(a).

Subpart E—Evidentiary Hearing for EPA-Issued NPDES Permits and EPA-Terminated RCRA Permits

124.71 Applicability.
124.72 Definitions.
124.73 Filing and submission of documents.
124.74 Requests for evidentiary hearing.
124.75 Decision on request for a hearing.
124.76 Obligation to submit evidence and raise issues before a final permit is issued.
124.77 Notice of hearing.
124.78 *Ex parte* communications.

124.79 Additional parties and issues.
124.80 Filing and service.
124.81 Assignment of Administrative Law Judge.
124.82 Consolidation and severance.
124.83 Prehearing conferences.
124.84 Summary determination.
124.85 Hearing procedure.
124.86 Motions.
124.87 Record of hearings.
124.88 Proposed findings of fact and conclusions; brief.
124.89 Decisions.
124.90 Interlocutory appeal.
124.91 Appeal to the Administrator.

Subpart F—Non-Adversary Panel Procedures

124.111 Applicability.
124.112 Relation to other subparts.
124.113 Public notice of draft permits and public comment period.
124.114 Request for hearing.
124.115 Effect of denial of or absence of request for hearing.
124.116 Notice of hearing.
124.117 Request to participate in hearing.
124.118 Submission of written comments on draft permit.
124.119 Presiding Officer.
124.120 Panel hearing.
124.121 Opportunity for cross-examination.
124.122 Record for final permit.
124.123 Filing of brief, proposed findings of fact and conclusions of law and proposed modified permit.
124.124 Recommended decision.
124.125 Appeal from or review of recommended decision.
124.126 Final decision.
124.127 Final decision if there is no review.
124.128 Delegation of authority; time limitations.

APPENDIX A TO PART 124—GUIDE TO DECISION-MAKING UNDER PART 124

AUTHORITY: Resource Conservation and Recovery Act, 42 U.S.C. 6901 *et seq.*; Safe Drinking Water Act, 42 U.S.C. 300(f) *et seq.*; Clean Water Act, 33 U.S.C. 1251 *et seq.*; Clean Air Act, 42 U.S.C. 7401 *et seq.*

SOURCE: 48 FR 14264, Apr. 1, 1983, unless otherwise noted.

Subpart A—General Program Requirements

§124.1 Purpose and scope.

(a) This part contains EPA procedures for issuing, modifying, revoking and reissuing, or terminating all RCRA, UIC, PSD and NPDES ''permits'' (including ''sludge-only'' permits issued pursuant to §122.1(b)(3)), other than RCRA and UIC ''emergency permits'' (see §§270.61 and 144.34) and RCRA ''permits by rule'' (§270.60). The latter kinds of permits are governed by part 270. RCRA interim status and UIC authorization by rule are not ''permits'' and are covered by specific provisions in parts 144, subpart C, and 270. This part also does not apply to permits issued, modified, revoked and reissued or terminated by the Corps of Engineers. Those procedures are specified in 33 CFR parts 320–327. The procedures of this part also apply to denial of a permit for the active life of a RCRA hazardous waste management facility or unit under §270.29.

(b) Part 124 is organized into six subparts. Subpart A contains general procedural requirements applicable to all permit programs covered by these regulations. Subparts B through F supplement these general provisions with requirements that apply to only one or more of the programs. Subpart A describes the steps EPA will follow in receiving permit applications, preparing draft permits, issuing public notice, inviting public comment and holding public hearings on draft permits. Subpart A also covers assembling an administrative record, responding to comments, issuing a final permit decision, and allowing for administrative appeal of the final permit decision. Subpart B is reserved for specific procedural requirements for RCRA permits. There are none of these at present but they may be added in the future. Subpart C contains definitions and specific procedural requirements for PSD permits. Subpart D applies to NPDES permits until an evidentiary hearing begins, when subpart E procedures take over for EPA-issued NPDES permits and EPA-terminated RCRA permits. Subpart F, which is based on the ''initial licensing'' provisions of the Administrative Procedure Act (APA), can be used instead of subparts A through E in appropriate cases.

(c) Part 124 offers an opportunity for three kinds of hearings: A public hearing under subpart A, an evidentiary hearing under subpart E, and a panel hearing under subpart F. This chart describes when these hearings are available for each of the five permit programs.

HEARINGS AVAILABLE UNDER THIS PART

Programs	Subpart		
	(A)	(E)	(F)
	Public hearing	Evidentiary hearing	Panel hearing
RCRA	On draft permit, at Director's discretion or on request (§ 124.12).	(1) Permit termination (RCRA section 3008). (2) With NPDES evidentiary hearing (§ 124.74(b)(2)).	(1) At RA's discretion in lieu of public hearing (§§ 124.12 and 124.111(a)(3)). (2) When consolidated with NPDES draft permit processed under Subpart F (§ 124.111(a)(1)(i)).
UIC	On draft permit, at Director's discretion or on request (§ 124.12).	With NPDES evidentiary hearing (§ 124.74(b)(2)).	(1) At RA's discretion in lieu of public hearing (§§ 124.12 and 124.111(a)(3)). (2) When consolidated with NPDES draft permit processed under Subpart F (§ 124.111(a)(1)(i)).
PSD	On draft permit, at Director's discretion or on request (§ 124.12).	Not available (§ 124.71(c))	When consolidated with NPDES draft permit processed under Subpart F if RA determines that CAA one year deadline will not be violated.
NPDES (other than general permit).	On draft permit, at Director's discretion or on request (§ 124.12).	(1) On request to challenge any permit condition or variance (§ 124.74). (2) At RA's discretion for any 301(h) request (§ 124.64(b)).	(1) At RA's discretion when first decision on permit or variance request (§ 124.111). (2) At RA's discretion when request for evidentiary hearing is granted under § 124.75(a)(2) (§§ 124.74(c)(8) and 124.111(a)(2)). (3) At RA's discretion for any 301(h) request (§ 124.64(b)).
NPDES (general permit).	On draft permit, at Director's discretion or on request (§ 124.12).	Not available (§ 124.71(a))	At RA's discretion in lieu of public hearing (§ 124.111(a)(3)).
404	On draft permit or on application when no draft permit, at Director's discretion or on request (§ 124.12).	Not available (§ 124.71)	Not available (§ 124.111).

(d) This part is designed to allow permits for a given facility under two or more of the listed programs to be processed separately or together at the choice of the Regional Administrator. This allows EPA to combine the processing of permits only when appropriate, and not necessarily in all cases. The Regional Administrator may consolidate permit processing when the permit applications are submitted, when draft permits are prepared, or when final permit decisions are issued. This part also allows consolidated permits to be subject to a single public hearing under § 124.12, a single evidentiary hearing under § 124.75, or a single non-adversary panel hearing under § 124.120. Permit applicants may recommend whether or not their applications should be consolidated in any given case.

(e) Certain procedural requirements set forth in part 124 must be adopted by States in order to gain EPA approval to operate RCRA, UIC, NPDES, and 404 permit programs. These requirements are listed in §§ 123.25 (NPDES), 145.11 (UIC), 233,26 (404), and 271.14 (RCRA) and signaled by the following words at the end of the appropriate part 124 section or paragraph heading: *(applicable to State programs see §§ 123.25 (NPDES), 145.11 (UIC), 233.26 (404), and 271.14 (RCRA))*. Part 124 does not apply to PSD permits issued by an approved State.

(f) To coordinate decisionmaking when different permits will be issued by EPA and approved State programs, this part allows applications to be jointly processed, joint comment periods and hearings to be held, and final permits to be issued on a cooperative basis whenever EPA and a State agree to take such steps in general or in individual cases. These joint processing agreements may be provided in the Memorandum of Agreement developed

under §§123.24 (NPDES), 145.24 (UIC), 233.24 (404), and 271.8 (RCRA).

[48 FR 14264, Apr. 1, 1983, as amended at 54 FR 9607, Mar. 7, 1989; 54 FR 18785, May 2, 1989]

§124.2 Definitions.

(a) In addition to the definitions given in §§122.2 and 123.2 (NPDES), 501.2 (sludge management), 144.3 and 145.2 (UIC), 233.3 (404), and 270.2 and 271.2 (RCRA), the definitions below apply to this part, except for PSD permits which are governed by the definitions in §124.41. Terms not defined in this section have the meaning given by the appropriate Act.

Administrator means the Administrator of the U.S. Environmental Protection Agency, or an authorized representative.

Applicable standards and limitations means all State, interstate, and federal standards and limitations to which a ''discharge,'' a ''sludge use or disposal practice'' or a related activity is subject under the CWA, including ''standards for sewage sludge use or disposal,'' ''effluent limitations,'' water quality standards, standards of performance, toxic effluent standards or prohibitions, ''best management practices,'' and pretreatment standards under sections 301, 302, 303, 304, 306, 307, 308, 403, and 405 of CWA.

Application means the EPA standard national forms for applying for a permit, including any additions, revisions or modifications to the forms; or forms approved by EPA for use in ''approved States,'' including any approved modifications or revisions. For RCRA, application also includes the information required by the Director under §§270.14 through 270.29 [contents of Part B of the RCRA application].

Appropriate Act and regulations means the Clean Water Act (CWA); the Solid Waste Disposal Act, as amended by the Resource Conservation Recovery Act (RCRA); or Safe Drinking Water Act (SDWA), whichever is applicable; and applicable regulations promulgated under those statutes. In the case of an ''approved State program'' appropriate Act and regulations includes program requirements.

Consultation with the Regional Administrator (§124.62(a)(2)) means review by the Regional Administrator following evaluation by a panel of the technical merits of all 301(k) applications approved by the Director. The panel (to be appointed by the Director of the Office of Water Enforcement and Permits) will consist of Headquarters, Regional, and State personnel familiar with the industrial category in question.

CWA means the Clean Water Act (formerly referred to as the Federal Water Pollution Control Act of Federal Pollution Control Act Amendments of 1972) Public Law 92–500, as amended by Public Law 95–217 and Public Law 95–576; 33 U.S.C. 1251 *et seq.*

Director means the Regional Administrator, the State director or the Tribal director as the context requires, or an authorized representative. When there is no approved State or Tribal program, and there is an EPA administered program, *Director* means the Regional Administrator. When there is an approved State or Tribal program, ''Director'' normally means the State or Tribal director. In some circumstances, however, EPA retains the authority to take certain actions even when there is an approved State or Tribal program. (For example, when EPA has issued an NPDES permit prior to the approval of a State program, EPA may retain jurisdiction over that permit after program approval; see §123.1) In such cases, the term ''Director'' means the Regional Administrator and not the State or Tribal director.

Draft permit means a document prepared under §124.6 indicating the Director's tentative decision to issue or deny, modify, revoke and reissue, terminate, or reissue a ''permit.'' A notice of intent to terminate a permit and a notice of intent to deny a permit as discussed in §124.5, are types of ''draft permits.'' A denial of a request for modification, revocation and reissuance or termination, as discussed in §124.5, is not a ''draft permit.'' A ''proposal permit'' is not a ''draft permit.''

Environmental Appeals Board shall mean the Board within the Agency described in §1.25(e) of this title. The Administrator delegates authority to the Environmental Appeals Board to issue final decisions in RCRA, PSD, UIC, or NPDES permit appeals filed under this subpart, including informal appeals of

denials of requests for modification, revocation and reissuance, or termination of permits under Section 124.5(b). An appeal directed to the Administrator, rather than to the Environmental Appeals Board, will not be considered. This delegation does not preclude the Environmental Appeals Board from referring an appeal or a motion under this subpart to the Administrator when the Environmental Appeals Board, in its discretion, deems it appropriate to do so. When an appeal or motion is referred to the Administrator by the Environmental Appeals Board, all parties shall be so notified and the rules in this subpart referring to the Environmental Appeals Board shall be interpreted as referring to the Administrator.

EPA (''EPA'') means the United States ''Environmental Protection Agency.''

Facility or activity means any ''HWM facility,'' UIC ''injection well,'' NPDES ''point source'' or ''treatment works treating domestic sewage'' or State 404 dredge or fill activity, or any other facility or activity (including land or appurtenances thereto) that is subject to regulation under the RCRA, UIC, NPDES, or 404 programs.

Federal Indian reservation (in the case of NPDES) means all land within the limits of any Indian reservation under the jurisdiction of the United States Government, notwithstanding the issuance of any patent, and including rights-of-way running through the reservation.

General permit (NPDES and 404) means an NPDES or 404 ''permit'' authorizing a category of discharges or activities under the CWA within a geographical area. For NPDES, a general permit means a permit issued under § 122.28. For 404, a general permit means a permit issued under § 233.37.

Indian Tribe means (in the case of UIC) any Indian Tribe having a federally recognized governing body carrying out substantial governmental duties and powers over a defined area. For the NPDES program, the term ''Indian Tribe'' means any Indian Tribe, band, group, or community recognized by the Secretary of the Interior and exercising governmental authority over a Federal Indian reservation.

Interstate agency means an agency of two or more States established by or under an agreement or compact approved by the Congress, or any other agency of two or more States having substantial powers or duties pertaining to the control of pollution as determined and approved by the Administrator under the ''appropriate Act and regulations.''

Major facility means any RCRA, UIC, NPDES, or 404 ''facility or activity'' classified as such by the Regional Administrator, or, in the case of ''approved State programs,'' the Regional Administrator in conjunction with the State Director.

NPDES means National Pollutant Discharge Elimination System.

Owner or operator means owner or operator of any ''facility or activity'' subject to regulation under the RCRA, UIC, NPDES, or 404 programs.

Permit means an authorization, license, or equivalent control document issued by EPA or an ''approved State'' to implement the requirements of this part and parts 122, 123, 144, 145, 233, 270, and 271. ''Permit'' includes RCRA ''permit by rule'' (§ 270.60), UIC area permit (§ 144.33), NPDES or 404 ''general permit'' (§§ 270.61, 144.34, and 233.38). Permit does not include RCRA interim status (§ 270.70), UIC authorization by rule (§ 144.21), or any permit which has not yet been the subject of final agency action, such as a ''draft permit'' or a ''proposed permit.''

Person means an individual, association, partnership, corporation, municipality, State, Federal, or Tribal agency, or an agency or employee thereof.

RCRA means the Solid Waste Disposal Act as amended by the Resource Conservation and Recovery Act of 1976 (Pub. L. 94–580, as amended by Pub. L. 95–609, 42 U.S.C. 6901 *et seq*).

Regional Administrator means the Regional Administrator of the appropriate Regional Office of the Environmental Protection Agency or the authorized representative of the Regional Administrator.

Schedule of compliance means a schedule of remedial measures included in a ''permit,'' including an enforceable sequence of interim requirements (for example, actions, operations, or milestone events) leading to compliance

with the ''appropriate Act and regulations.''

SDWA means the Safe Drinking Water Act (Pub. L. 95–523, as amended by Pub. L. 95–1900; 42 U.S.C. 300f *et seq*).

Section 404 program or State 404 program or 404 means an ''approved State program'' to regulate the ''discharge of dredged material'' and the ''discharge of fill material'' under section 404 of the Clean Water Act in ''State regulated waters.''

Site means the land or water area where any ''facility or activity'' is physically located or conducted, including adjacent land used in connection with the facility or activity.

State means one of the States of the United States, the District of Columbia, the Commonwealth of Puerto Rico, the Virgin Islands, Guam, American Samoa, the Trust Territory of the Pacific Islands (except in the case of RCRA), the Commonwealth of the Northern Mariana Islands, or an Indian Tribe that meets the statutory criteria which authorize EPA to treat the Tribe in a manner similar to that in which it treats a State (except in the case of RCRA).

State Director means the chief administrative officer of any State, interstate, or Tribal agency operating an approved program, or the delegated representative of the State director. If the responsibility is divided among two or more States, interstate, or Tribal agencies, ''State Director'' means the chief administrative officer of the State, interstate, or Tribal agency authorized to perform the particular procedure or function to which reference is made.

State Director means the chief administrative officer of any State or interstate agency operating an ''approved program,'' or the delegated representative of the state Director. If responsibility is divided among two or more State or interstate agencies, ''State Director'' means the chief administrative officer of the State or interstate agency authorized to perform the particular procedure or function to which reference is made.

UIC means the Underground Injection Control program under Part C of the Safe Drinking Water Act, including an ''approved program.''

Variance (NPDES) means any mechanism or provision under section 301 or 316 of CWA or under 40 CFR part 125, or in the applicable ''effluent limitations guidelines'' which allows modification to or waiver of the generally applicable effluent limitation requirements or time deadlines of CWA. This includes provisions which allow the establishment of alternative limitations based on fundamentally different factors or on sections 301(c), 301(g), 301(h), 301(i), or 316(a) of CWA.

(b) For the purposes of part 124, the term *Director* means the State Director or Regional Administrator and is used when the accompanying provision is required of EPA-administered programs and of State programs under §§123.25 (NPDES), 145.11 (UIC), 233.26 (404), and 271.14 (RCRA). The term *Regional Administrator* is used when the accompanying provision applies exclusively to EPA-issued permits and is not applicable to State programs under these sections. While States are not required to implement these latter provisions, they are not precluded from doing so, notwithstanding use of the term ''Regional Administrator.''

(c) The term *formal hearing* means any evidentiary hearing under subpart E or any panel hearing under subpart F but does not mean a public hearing conducted under §124.12.

[48 FR 14264, Apr. 1, 1983; 48 FR 30115, June 30, 1983, as amended at 49 FR 25981, June 25, 1984; 53 FR 37410, Sept. 26, 1988; 54 FR 18785, May 2, 1989; 57 FR 5335, Feb. 13, 1992; 57 FR 60129, Dec. 18, 1992; 58 FR 67983, Dec. 22, 1993; 59 FR 64343, Dec. 14, 1994]

§124.3 Application for a permit.

(a) *Applicable to State programs, see §§123.25 (NPDES), 145.11 (UIC), 233.26 (404), and 271.14 (RCRA).* (1) Any person who requires a permit under the RCRA, UIC, NPDES, or PSD programs shall complete, sign, and submit to the Director an application for each permit required under §§270.1 (RCRA), 144.1 (UIC), 40 CFR 52.21 (PSD), and 122.1 (NPDES). Applications are not required for RCRA permits by rule (§270.60), underground injections authorized by rules (§§144.21 through 144.26), NPDES general permits (§122.28) and 404 general permits (§233.37).

(2) The Director shall not begin the processing of a permit until the applicant has fully complied with the application requirements for that permit. See §§ 270.10, 270.13 (RCRA), 144.31 (UIC), 40 CFR 52.21 (PSD), and 122.21 (NPDES).

(3) Permit applications (except for PSD permits) must comply with the signature and certification requirements of §§ 122.22 (NPDES), 144.32 (UIC), 233.6 (404), and 270.11 (RCRA).

(b) [Reserved]

(c) The Regional Administrator shall review for completeness every application for an EPA-issued permit. Each application for an EPA-issued permit submitted by a new HWM facility, a new UIC injection well, a major PSD stationary source or major PSD modification, or an NPDES new source or NPDES new discharger should be reviewed for completeness by the Regional Administrator within 30 days of its receipt. Each application for an EPA-issued permit submitted by an existing HWM facility (both Parts A and B of the application), existing injection well or existing NPDES source or sludge-only facility should be reviewed for completeness within 60 days of receipt. Upon completing the review, the Regional Administrator shall notify the applicant in writing whether the application is complete. If the application is incomplete, the Regional Administrator shall list the information necessary to make the application complete. When the application is for an existing HWM facility, an existing UIC injection well or an existing NPDES source or ''sludge-only facility'' the Regional Administrator shall specify in the notice of deficiency a date for submitting the necessary information. The Regional Administrator shall notify the applicant that the application is complete upon receiving this information. After the application is completed, the Regional Administrator may request additional information from an applicant but only when necessary to clarify, modify, or supplement previously submitted material. Requests for such additional information will not render an application incomplete.

(d) If an applicant fails or refuses to correct deficiencies in the application, the permit may be denied and appropriate enforcement actions may be taken under the applicable statutory provision including RCRA section 3008, SDWA sections 1423 and 1424, CAA section 167, and CWA sections 308, 309, 402(h), and 402(k).

(e) If the Regional Administrator decides that a site visit is necessary for any reason in conjunction with the processing of an application, he or she shall notify the applicant and a date shall be scheduled.

(f) The effective date of an application is the date on which the Regional Administrator notifies the applicant that the application is complete as provided in paragraph (c) of this section.

(g) For each application from a major new HWM facility, major new UIC injection well, major NPDES new source, major NPDES new discharger, or a permit to be issued under provisions of § 122.28(c), the Regional Administrator shall, no later than the effective date of the application, prepare and mail to the applicant a project decision schedule. (This paragraph does not apply to PSD permits.) The schedule shall specify target dates by which the Regional Administrator intends to:

(1) Prepare a draft permit;

(2) Give public notice;

(3) Complete the public comment period, including any public hearing;

(4) Issue a final permit; and

(5) In the case of an NPDES permit, complete any formal proceedings under subpart E or F.

(Clean Water Act (33 U.S.C. 1251 *et seq.*), Safe Drinking Water Act (42 U.S.C. 300f *et seq.*), Clean Air Act (42 U.S.C. 7401 *et seq.*), Resource Conservation and Recovery Act (42 U.S.C. 6901 *et seq.*))

[48 FR 14264, Apr. 1, 1983, as amended at 48 FR 39620, Sept. 1, 1983; 54 FR 18785, May 2, 1989]

§ 124.4 Consolidation of permit processing.

(a)(1) Whenever a facility or activity requires a permit under more than one statute covered by these regulations, processing of two or more applications for those permits may be consolidated. The first step in consolidation is to prepare each draft permit at the same time.

(2) Whenever draft permits are prepared at the same time, the statements

of basis (required under §124.7 for EPA-issued permits only) or fact sheets (§124.8), administrative records (required under §124.9 for EPA-issued permits only), public comment periods (§124.10), and any public hearings (§124.12) on those permits should also be consolidated. The final permits may be issued together. They need not be issued together if in the judgment of the Regional Administrator or State Director(s), joint processing would result in unreasonable delay in the issuance of one or more permits.

(b) Whenever an existing facility or activity requires additional permits under one or more of the statutes covered by these regulations, the permitting authority may coordinate the expiration date(s) of the new permit(s) with the expiration date(s) of the existing permit(s) so that all permits expire simultaneously. Processing of the subsequent applications for renewal permits may then be consolidated.

(c) Processing of permit applications under paragraph (a) or (b) of this section may be consolidated as follows:

(1) The Director may consolidate permit processing at his or her discretion whenever a facility or activity requires all permits either from EPA or from an approved State.

(2) The Regional Administrator and the State Director(s) may agree to consolidate draft permits whenever a facility or activity requires permits from both EPA and an approved State.

(3) Permit applicants may recommend whether or not the processing of their applications should be consolidated.

(d) Whenever permit processing is consolidated and the Regional Administrator invokes the ''initial licensing'' provisions of subpart F for an NPDES, RCRA, or UIC permit, any permit(s) with which that NPDES, RCRA or UIC permit was consolidated shall likewise be processed under subpart F.

(e) Except with the written consent of the permit applicant, the Regional Administrator shall not consolidate processing a PSD permit with any other permit under paragraph (a) or (b) of this section or process a PSD permit under subpart F as provided in paragraph (d) of this section when to do so would delay issuance of the PSD permit more than one year from the effective date of the application under §124.3(f).

§124.5 Modification, revocation and reissuance, or termination of permits.

(a) *(Applicable to State programs, see §§123.25 (NPDES), 145.11 (UIC), 233.26 (404), and 271.14 (RCRA)).* Permits (other than PSD permits) may be modified, revoked and reissued, or terminated either at the request of any interested person (including the permittee) or upon the Director's initiative. However, permits may only be modified, revoked and reissued, or terminated for the reasons specified in §122.62 or §122.64 (NPDES), 144.39 or 144.40 (UIC), 233.14 or 233.15 (404), and 270.41 or 270.43 (RCRA). All requests shall be in writing and shall contain facts or reasons supporting the request.

(b) If the Director decides the request is not justified, he or she shall send the requester a brief written response giving a reason for the decision. Denials of requests for modification, revocation and reissuance, or termination are not subject to public notice, comment, or hearings. Denials by the Regional Administrator may be informally appealed to the Environmental Appeals Board by a letter briefly setting forth the relevant facts. The Environmental Appeals Board may direct the Regional Administrator to begin modification, revocation and reissuance, or termination proceedings under paragraph (c) of this section. The appeal shall be considered denied if the Environmental Appeals Board takes no action on the letter within 60 days after receiving it. This informal appeal is, under 5 U.S.C. 704, a prerequisite to seeking judicial review of EPA action in denying a request for modification, revocation and reissuance, or termination.

(c) *(Applicable to State programs, see §§123.25 (NPDES), 145.11 (UIC), 233.26 (404), and 271.14 (RCRA)).* (1) If the Director tentatively decides to modify or revoke and reissue a permit under §§122.62 (NPDES), 144.39 (UIC), 233.14 (404), or 270.41 or 270.42(c) (RCRA), he or she shall prepare a draft permit under §124.6 incorporating the proposed changes. The Director may request additional information and, in the case of

a modified permit, may require the submission of an updated application. In the case of revoked and reissued permits, the Director shall require the submission of a new application.

(2) In a permit modification under this section, only those conditions to be modified shall be reopened when a new draft permit is prepared. All other aspects of the existing permit shall remain in effect for the duration of the unmodified permit. When a permit is revoked and reissued under this section, the entire permit is reopened just as if the permit had expired and was being reissued. During any revocation and reissuance proceeding the permittee shall comply with all conditions of the existing permit until a new final permit is reissued.

(3) ''Minor modifications'' as defined in §§122.63 (NPDES), 144.41 (UIC), and 233.16 (404), and ''Classes 1 and 2 modifications'' as defined in §270.42 (a) and (b) (RCRA) are not subject to the requirements of this section.

(d) *(Applicable to State programs, see §§123.25 (NPDES), 145.11 (UIC), 233.26 (404), and 271.14 (RCRA)).* If the Director tentatively decides to terminate a permit under §§122.64 (NDPES), 144.40 (UIC), 233.15 (404), or 270.43 (RCRA), he or she shall issue a notice of intent to terminate. A notice of intent to terminate is a type of draft permit which follows the same procedures as any draft permit prepared under §124.6. In the case of EPA-issued permits, a notice of intent to terminate shall not be issued if the Regional Administrator and the permittee agree to termination in the course of transferring permit responsibility to an approved State under §§123.24(b)(1) (NPDES), 145.24(b)(1) (UIC), 271.8(b)(6) (RCRA), or 501.14(b)(1) (Sludge).

(e) When EPA is the permitting authority, all draft permits (including notices of intent to terminate) prepared under this section shall be based on the administrative record as defined in §124.9.

(f) *(Applicable to State programs, see §233.26 (404)).* Any request by the permittee for modification to an existing 404 permit (other than a request for a minor modification as defined in §233.16 (404)) shall be treated as a permit application and shall be processed in accordance with all requirements of §124.3.

(g)(1) (Reserved for PSD Modification Provisions).

(2) PSD permits may be terminated only by rescission under §52.21(w) or by automatic expiration under §52.21(r). Applications for rescission shall be precessed under §52.21(w) and are not subject to this part.

[48 FR 14264, Apr. 1, 1983, as amended at 53 FR 37934, Sept. 28, 1988; 54 FR 18785, May 2, 1989; 57 FR 60129, Dec. 18, 1992]

§ 124.6 Draft permits.

(a) *(Applicable to State programs, see §§123.25 (NPDES), 145.11 (UIC), 233.26 (404), and 271.14 (RCRA).)* Once an application is complete, the Director shall tentatively decide whether to prepare a draft permit (except in the case of State section 404 permits for which no draft permit is required under §233.39) or to deny the application.

(b) If the Director tentatively decides to deny the permit application, he or she shall issue a notice of intent to deny. A notice of intent to deny the permit application is a type of draft permit which follows the same procedures as any draft permit prepared under this section. See §124.6(e). If the Director's final decision (§124.15) is that the tentative decision to deny the permit application was incorrect, he or she shall withdraw the notice of intent to deny and proceed to prepare a draft permit under paragraph (d) of this section.

(c) *(Applicable to State programs, see §§123.25 (NPDES) and 233.26 (404).)* If the Director tentatively decides to issue an NPDES or 404 general permit, he or she shall prepare a draft general permit under paragraph (d) of this section.

(d) *(Applicable to State programs, see §§123.25 (NPDES), 145.11 (UIC), 233.26 (404), and 271.14 (RCRA).)* If the Director decides to prepare a draft permit, he or she shall prepare a draft permit that contains the following information:

(1) All conditions under §§122.41 and 122.43 (NPDES), 144.51 and 144.42 (UIC, 233.7 and 233.8 (404, or 270.30 and 270.32 (RCRA) (except for PSD permits)));

(2) All compliance schedules under §§122.47 (NPDES), 144.53 (UIC), 233.10 (404), or 270.33 (RCRA) (except for PSD permits);

(3) All monitoring requirements under §§122.48 (NPDES), 144.54 (UIC), 233.11 (404), or 270.31 (RCRA) (except for PSD permits); and

(4) For:

(i) RCRA permits, standards for treatment, storage, and/or disposal and other permit conditions under §270.30;

(ii) UIC permits, permit conditions under §144.52;

(iii) PSD permits, permit conditions under 40 CFR §52.21;

(iv) 404 permits, permit conditions under §§233.7 and 233.8;

(v) NPDES permits, effluent limitations, standards, prohibitions, standards for sewage sludge use or disposal, and conditions under §§122.41, 122.42, and 122.44, including when applicable any conditions certified by a State agency under §124.55, and all variances that are to be included under §124.63.

(e) *(Applicable to State programs, see §§123.25 (NPDES), 145.11 (UIC), 233.26 (404), and 271.14 (RCRA).)* All draft permits prepared by EPA under this section shall be accompanied by a statement of basis (§124.7) or fact sheet (§124.8), and shall be based on the administrative record (§124.9), publicly noticed (§124.10) and made available for public comment (§124.11). The Regional Administrator shall give notice of opportunity for a public hearing (§124.12), issue a final decision (§124.15) and respond to comments (§124.17). For RCRA, UIC or PSD permits, an appeal may be taken under §124.19 and, for NPDES permits, an appeal may be taken under §124.74. Draft permits prepared by a State shall be accompanied by a fact sheet if required under §124.8.

[48 FR 14264, Apr. 1, 1983, as amended at 54 FR 18785, May 2, 1989]

§124.7 Statement of basis.

EPA shall prepare a statement of basis for every draft permit for which a fact sheet under §124.8 is not prepared. The statement of basis shall briefly describe the derivation of the conditions of the draft permit and the reasons for them or, in the case of notices of intent to deny or terminate, reasons supporting the tentative decision. The statement of basis shall be sent to the applicant and, on request, to any other person.

§124.8 Fact sheet.

(Applicable to State programs, see §§123.25 (NPDES), 145.11 (UIC), 233.26 (404), and 271.14 (RCRA).)

(a) A fact sheet shall be prepared for every draft permit for a major HWM, UIC, 404, or NPDES facility or activity, for every Class I sludge management facility, for every 404 and NPDES general permit (§§237.37 and 122.28), for every NPDES draft permit that incorporates a variance or requires an explanation under §124.56(b), for every draft permit that includes a sewage sludge land application plan under 40 CFR 501.15(a)(2)(ix), and for every draft permit which the Director finds is the subject of wide-spread public interest or raises major issues. The fact sheet shall briefly set forth the principal facts and the significant factual, legal, methodological and policy questions considered in preparing the draft permit. The Director shall send this fact sheet to the applicant and, on request, to any other person.

(b) The fact sheet shall include, when applicable:

(1) A brief description of the type of facility or activity which is the subject of the draft permit;

(2) The type and quantity of wastes, fluids, or pollutants which are proposed to be or are being treated, stored, disposed of, injected, emitted, or discharged.

(3) For a PSD permit, the degree of increment consumption expected to result from operation of the facility or activity.

(4) A brief summary of the basis for the draft permit conditions including references to applicable statutory or regulatory provisions and appropriate supporting references to the administrative record required by §124.9 (for EPA-issued permits);

(5) Reasons why any requested variances or alternatives to required standards do or do not appear justified;

(6) A description of the procedures for reaching a final decision on the draft permit including:

(i) The beginning and ending dates of the comment period under §124.10 and the address where comments will be received;

(ii) Procedures for requesting a hearing and the nature of that hearing; and

(iii) Any other procedures by which the public may participate in the final decision.

(7) Name and telephone number of a person to contact for additional information.

(8) For NPDES permits, provisions satisfying the requirements of § 124.56.

[48 FR 14264, Apr. 1, 1983, as amended at 54 FR 18786, May 2, 1989]

§ 124.9 Administrative record for draft permits when EPA is the permitting authority.

(a) The provisions of a draft permit prepared by EPA under § 124.6 shall be based on the administrative record defined in this section.

(b) For preparing a draft permit under § 124.6, the record shall consist of:

(1) The application, if required, and any supporting data furnished by the applicant;

(2) The draft permit or notice of intent to deny the application or to terminate the permit;

(3) The statement of basis (§ 124.7) or fact sheet (§ 124.8);

(4) All documents cited in the statement of basis or fact sheet; and

(5) Other documents contained in the supporting file for the draft permit.

(6) For NPDES new source draft permits only, any environmental assessment, environmental impact statement (EIS), finding of no significant impact, or environmental information document and any supplement to an EIS that may have been prepared. NPDES permits other than permits to new sources as well as all RCRA, UIC and PSD permits are not subject to the environmental impact statement provisions of section 102(2)(C) of the National Environmental Policy Act, 42 U.S.C. 4321.

(c) Material readily available at the issuing Regional Office or published material that is generally available, and that is included in the administrative record under paragraphs (b) and (c) of this section, need not be physically included with the rest of the record as long as it is specifically referred to in the statement of basis or the fact sheet.

(d) This section applies to all draft permits when public notice was given after the effective date of these regulations.

§ 124.10 Public notice of permit actions and public comment period.

(a) *Scope.* (1) The Director shall give public notice that the following actions have occurred:

(i) A permit application has been tentatively denied under § 124.6(b);

(ii) *(Applicable to State programs, see §§ 123.25 (NPDES), 145.11 (UIC), 233.26 (404), and 271.14 (RCRA)).* A draft permit has been prepared under § 124.6(d);

(iii) *(Applicable to State programs, see §§ 123.25 (NPDES), 145.11 (UIC), 233.26 (404) and 271.14 (RCRA)).* A hearing has been scheduled under § 124.12, subpart E or subpart F;

(iv) An appeal has been granted under § 124.19(c);

(v) *(Applicable to State programs, see § 233.26 (404)).* A State section 404 application has been received in cases when no draft permit will be prepared (see § 233.39); or

(vi) An NPDES new source determination has been made under § 122.29.

(2) No public notice is required when a request for permit modification, revocation and reissuance, or termination is denied under § 124.5(b). Written notice of that denial shall be given to the requester and to the permittee.

(3) Public notices may describe more than one permit or permit actions.

(b) *Timing (applicable to State programs, see §§ 123.25 (NPDES), 145.11 (UIC), 233.26 (404, and 271.14 (RCRA)).* (1) Public notice of the preparation of a draft permit (including a notice of intent to deny a permit application) required under paragraph (a) of this section shall allow at least 30 days for public comment. For RCRA permits only, public notice shall allow at least 45 days for public comment. For EPA-issued permits, if the Regional Administrator determines under 40 CFR part 6, subpart F that an Environmental Impact Statement (EIS) shall be prepared for an NPDES new source, public notice of the draft permit shall not be given until after a draft EIS is issued.

(2) Public notice of a public hearing shall be given at least 30 days before the hearing. (Public notice of the hearing may be given at the same time as

public notice of the draft permit and the two notices may be combined.)

(c) *Methods (applicable to State programs, see §§ 123.25 (NPDES), 145.11 (UIC), 233.26 (404), and 271.14 (RCRA)).* Public notice of activities described in paragraph (a)(1) of this section shall be given by the following methods:

(1) By mailing a copy of a notice to the following persons (any person otherwise entitled to receive notice under this paragraph may waive his or her rights to receive notice for any classes and categories of permits);

(i) The applicant (except for NPDES and 404 general permits when there is no applicant);

(ii) Any other agency which the Director knows has issued or is required to issue a RCRA, UIC, PSD (or other permit under the Clean Air Act), NPDES, 404, sludge management permit, or ocean dumping permit under the Marine Research Protection and Sanctuaries Act for the same facility or activity (including EPA when the draft permit is prepared by the State);

(iii) Federal and State agencies with jurisdiction over fish, shellfish, and wildlife resources and over coastal zone management plans, the Advisory Council on Historic Preservation, State Historic Preservation Officers, including any affected States (Indian Tribes). (For purposes of this paragraph, and in the context of the Underground Injection Control Program only, the term State includes Indian Tribes treated as States.)

(iv) For NPDES and 404 permits only, any State agency responsible for plan development under CWA section 208(b)(2), 208(b)(4) or 303(e) and the U.S. Army Corps of Engineers, the U.S. Fish and Wildlife Service and the National Marine Fisheries Service;

(v) For NPDES permits only, any user identified in the permit application of a privately owned treatment works;

(vi) For 404 permits only, any reasonably ascertainable owner of property adjacent to the regulated facility or activity and the Regional Director of the Federal Aviation Administration if the discharge involves the construction of structures which may affect aircraft operations or for purposes associated with seaplane operations;

(vii) For PSD permits only, affected State and local air pollution control agencies, the chief executives of the city and county where the major stationary source or major modification would be located, any comprehensive regional land use planning agency and any State, Federal Land Manager, or Indian Governing Body whose lands may be affected by emissions from the regulated activity;

(viii) For Class I injection well UIC permits only, state and local oil and gas regulatory agencies and state agencies regulating mineral exploration and recovery;

(ix) Persons on a mailing list developed by:

(A) Including those who request in writing to be on the list;

(B) Soliciting persons for ''area lists'' from participants in past permit proceedings in that area; and

(C) Notifying the public of the opportunity to be put on the mailing list through periodic publication in the public press and in such publications as Regional and State funded newsletters, environmental bulletins, or State law journals. (The Director may update the mailing list from time to time by requesting written indication of continued interest from those listed. The Director may delete from the list the name of any person who fails to respond to such a request.)

(x)(A) To any unit of local government having jurisdiction over the area where the facility is proposed to be located; and (B) to each State agency having any authority under State law with respect to the construction or operation of such facility.

(2)(i) For major permits, NPDES and 404 general permits, and permits that include sewage sludge land application plans under 40 CFR 501.15(a)(2)(ix), publication of a notice in a daily or weekly newspaper within the area affected by the facility or activity; and for EPA-issued NPDES general permits, in the FEDERAL REGISTER;

NOTE: The Director is encouraged to provide as much notice as possible of the NPDES or Section 404 draft general permit to the facilities or activities to be covered by the general permit.

(ii) For all RCRA permits, publication of a notice in a daily or weekly

major local newspaper of general circulation and broadcast over local radio stations.

(3) When the program is being administered by an approved State, in a manner constituting legal notice to the public under State law; *and*

(4) Any other method reasonably calculated to give actual notice of the action in question to the persons potentially affected by it, including press releases or any other forum or medium to elicit public participation.

(d) *Contents (applicable to State programs, see §§ 123.25 (NPDES), 145.11 (UIC), 233.26 (404), and 271.14 (RCRA))*—(1) *All public notices.* All public notices issued under this part shall contain the following minimum information:

(i) Name and address of the office processing the permit action for which notice is being given;

(ii) Name and address of the permittee or permit applicant and, if different, of the facility or activity regulated by the permit, except in the case of NPDES and 404 draft general permits under §§ 122.28 and 233.37;

(iii) A brief description of the business conducted at the facility or activity described in the permit application or the draft permit, for NPDES or 404 general permits when there is no application.

(iv) Name, address and telephone number of a person from whom interested persons may obtain further information, including copies of the draft permit or draft general permit, as the case may be, statement of basis or fact sheet, and the application; and

(v) A brief description of the comment procedures required by §§ 124.11 and 124.12 and the time and place of any hearing that will be held, including a statement of procedures to request a hearing (unless a hearing has already been scheduled) and other procedures by which the public may participate in the final permit decision.

(vi) For EPA-issued permits, the location of the administrative record required by § 124.9, the times at which the record will be open for public inspection, and a statement that all data submitted by the applicant is available as part of the administrative record.

(vii) For NPDES permits only (including those for ''sludge-only facilities''), a general description of the location of each existing or proposed discharge point and the name of the receiving water and the sludge use and disposal practice(s) and the location of each sludge treatment works treating domestic sewage and use or disposal sites known at the time of permit application. For draft general permits, this requirement will be satisfied by a map or description of the permit area. For draft general permits, this requirement will be satisfied by a map or description of the permit area. For EPA-issued NPDES permits only, if the discharge is from a new source, a statement as to whether an environmental impact statement will be or has been prepared.

(viii) For 404 permits only,

(A) The purpose of the proposed activity (including, in the case of fill material, activities intended to be conducted on the fill), a description of the type, composition, and quantity of materials to be discharged and means of conveyance; and any proposed conditions and limitations on the discharge;

(B) The name and water quality standards classification, if applicable, of the receiving waters into which the discharge is proposed, and a general description of the site of each proposed discharge and the portions of the site and the discharges which are within State regulated waters;

(C) A description of the anticipated environmental effects of activities conducted under the permit;

(D) References to applicable statutory or regulatory authority; and

(E) Any other available information which may assist the public in evaluating the likely impact of the proposed activity upon the integrity of the receiving water.

(ix) Any additional information considered necessary or proper.

(2) *Public notices for hearings.* In addition to the general public notice described in paragraph (d)(1) of this section, the public notice of a hearing under § 124.12, subpart E, or subpart F shall contain the following information:

(i) Reference to the date of previous public notices relating to the permit;

(ii) Date, time, and place of the hearing;

(iii) A brief description of the nature and purpose of the hearing, including the applicable rules and procedures; and

(iv) For 404 permits only, a summary of major issues raised to date during the public comment period.

(e) *(Applicable to State programs, see §§ 123.25 (NPDES), 145.11 (UIC), 233.26 (404), and 271.14 (RCRA)).* In addition to the general public notice described in paragraph (d)(1) of this section, all persons identified in paragraphs (c)(1) (i), (ii), (iii), and (iv) of this section shall be mailed a copy of the fact sheet or statement of basis (for EPA-issued permits), the permit application (if any) and the draft permit (if any).

[48 FR 14264, Apr. 1, 1983; 48 FR 30115, June 30, 1983, as amended at 53 FR 28147, July 26, 1988; 53 FR 37410, Sept. 26, 1988; 54 FR 258, Jan. 4, 1989; 54 FR 18786, May 2, 1989]

§ 124.11 Public comments and requests for public hearings.

(Applicable to State programs, see §§ 123.25 (NPDES), 145.11 (UIC), 233.26 (404), and 271.14 (RCRA)). During the public comment period provided under § 124.10, any interested person may submit written comments on the draft permit or the permit application for 404 permits when no draft permit is required (see § 233.39) and may request a public hearing, if no hearing has already been scheduled. A request for a public hearing shall be in writing and shall state the nature of the issues proposed to be raised in the hearing. All comments shall be considered in making the final decision and shall be answered as provided in § 124.17.

§ 124.12 Public hearings.

(a) *(Applicable to State programs, see §§ 123.25 (NPDES), 145.11 (UIC), 233.26 (404), and 271.14 (RCRA).)* (1) The Director shall hold a public hearing whenever he or she finds, on the basis of requests, a significant degree of public interest in a draft permit(s);

(2) The Director may also hold a public hearing at his or her discretion, whenever, for instance, such a hearing might clarify one or more issues involved in the permit decision;

(3) For RCRA permits only, (i) the Director shall hold a public hearing whenever he or she receives written notice of opposition to a draft permit and a request for a hearing within 45 days of public notice under § 124.10(b)(1); (ii) whenever possible the Director shall schedule a hearing under this section at a location convenient to the nearest population center to the proposed facility;

(4) Public notice of the hearing shall be given as specified in § 124.10.

(b) Whenever a public hearing will be held and EPA is the permitting authority, the Regional Administrator shall designate a Presiding Officer for the hearing who shall be responsible for its scheduling and orderly conduct.

(c) Any person may submit oral or written statements and data concerning the draft permit. Reasonable limits may be set upon the time allowed for oral statements, and the submission of statements in writing may be required. The public comment period under § 124.10 shall automatically be extended to the close of any public hearing under this section. The hearing officer may also extend the comment period by so stating at the hearing.

(d) A tape recording or written transcript of the hearing shall be made available to the public.

(e)(1) At his or her discretion, the Regional Administrator may specify that RCRA or UIC permits be processed under the procedures in subpart F.

(2) For initial RCRA permits for existing HWM facilities, the Regional Administrator shall have the discretion to provide a hearing under the procedures in subpart F. The permit applicant may request such a hearing pursuant to § 124.114 no one or more issues, if the applicant explains in his request why he or she believes those issues:

(i) Are genuine issues to material fact; and (ii) determine the outcome of one or more contested permit conditions identified as such in the applicant's request, that would require extensive changes to the facility (''contested major permit conditions''). If the Regional Administrator decides to deny the request, he or she shall send to the applicant a brief written statement of his or her reasons for concluding that no such determinative issues

have been presented for resolution in such a hearing.

[48 FR 14264, Apr. 1, 1983, as amended at 49 FR 17718, Apr. 24, 1984; 50 FR 6941, Feb. 19, 1985; 54 FR 258, Jan. 4, 1989]

§ 124.13 Obligation to raise issues and provide information during the public comment period.

All persons, including applicants, who believe any condition of a draft permit is inappropriate or that the Director's tentative decision to deny an application, terminate a permit, or prepare a draft permit is inappropriate, must raise all reasonably ascertainable issues and submit all reasonably available arguments supporting their position by the close of the public comment period (including any public hearing) under § 124.10. Any supporting materials which are submitted shall be included in full and may not be incorporated by reference, unless they are already part of the administrative record in the same proceeding, or consist of State or Federal statutes and regulations, EPA documents of general applicability, or other generally available reference materials. Commenters shall make supporting materials not already included in the administrative record available to EPA as directed by the Regional Administrator. (A comment period longer than 30 days may be necessary to give commenters a reasonable opportunity to comply with the requirements of this section. Additional time shall be granted under § 124.10 to the extent that a commenter who requests additional time demonstrates the need for such time.)

[49 FR 38051, Sept. 26, 1984]

§ 124.14 Reopening of the public comment period.

(a)(1) The Regional Administrator may order the public comment period reopened if the procedures of this paragraph could expedite the decisionmaking process. When the public comment period is reopened under this paragraph, all persons, including applicants, who believe any condition of a draft permit is inappropriate or that the Regional Administrator's tentative decision to deny an application, terminate a permit, or prepare a draft permit is inappropriate, must submit all reasonably available factual grounds supporting their position, including all supporting material, by a date, not less than sixty days after public notice under paragraph (a)(2) of this section, set by the Regional Administrator. Thereafter, any person may file a written response to the material filed by any other person, by a date, not less than twenty days after the date set for filing of the material, set by the Regional Administrator.

(2) Public notice of any comment period under this paragraph shall identify the issues to which the requirements of § 124.14(a) shall apply.

(3) On his own motion or on the request of any person, the Regional Administrator may direct that the requirements of paragraph (a)(1) of this section shall apply during the initial comment period where it reasonably appears that issuance of the permit will be contested and that applying the requirements of paragraph (a)(1) of this section will substantially expedite the decisionmaking process. The notice of the draft permit shall state whenever this has been done.

(4) A comment period of longer than 60 days will often be necessary in complicated proceedings to give commenters a reasonable opportunity to comply with the requirements of this section. Commenters may request longer comment periods and they shall be granted under § 124.10 to the extent they appear necessary.

(b) If any data information or arguments submitted during the public comment period, including information or arguments required under § 124.13, appear to raise substantial new questions concerning a permit, the Regional Administrator may take one or more of the following actions:

(1) Prepare a new draft permit, appropriately modified, under § 124.6;

(2) Prepare a revised statement of basis under § 124.7, a fact sheet or revised fact sheet under § 124.8 and reopen the comment period under § 124.14; or

(3) Reopen or extend the comment period under § 124.10 to give interested persons an opportunity to comment on the information or arguments submitted.

(c) Comments filed during the reopened comment period shall be limited to the substantial new questions that caused its reopening. The public notice under §124.10 shall define the scope of the reopening.

(d) For RCRA, UIC, or NPDES permits, the Regional Administrator may also, in the circumstances described above, elect to hold further proceedings under subpart F. This decision may be combined with any of the actions enumerated in paragraph (b) of this section.

(e) Public notice of any of the above actions shall be issued under §124.10.

[48 FR 14264, Apr. 1, 1983, as amended at 49 FR 38051, Sept. 26, 1984]

§124.15 Issuance and effective date of permit.

(a) After the close of the public comment period under §124.10 on a draft permit, the Regional Administrator shall issue a final permit decision (or a decision to deny a permit for the active life of a RCRA hazardous waste management facility or unit under §270.29). The Regional Administrator shall notify the applicant and each person who has submitted written comments or requested notice of the final permit decision. This notice shall include reference to the procedures for appealing a decision on a RCRA, UIC, or PSD permit or for contesting a decision on an NPDES permit or a decision to terminate a RCRA permit. For the purposes of this section, a final permit decision means a final decision to issue, deny, modify, revoke and reissue, or terminate a permit.

(b) A final permit decision (or a decision to deny a permit for the active life of a RCRA hazardous waste management facility or unit under §270.29) shall become effective 30 days after the service of notice of the decision unless:

(1) A later effective date is specified in the decision; or

(2) Review is requested under §124.19 (RCRA, UIC, and PSD permits) or an evidentiary hearing is requested under §124.74 (NPDES permit and RCRA permit terminations); or

(3) No comments requested a change in the draft permit, in which case the permit shall become effective immediately upon issuance.

[48 FR 14264, Apr. 1, 1983, as amended at 54 FR 9607, Mar. 7, 1989]

§124.16 Stays of contested permit conditions.

(a) *Stays.* (1) If a request for review of a RCRA or UIC permit under §124.19 or an NPDES permit under §124.74 or §124.114 is granted or if conditions of a RCRA or UIC permit are consolidated for reconsideration in an evidentiary hearing on an NPDES permit under §§124.74, 124.82 or 124.114, the effect of the contested permit conditions shall be stayed and shall not be subject to judicial review pending final agency action. (No stay of a PSD permit is available under this section.) If the permit involves a new facility or new injection well, new source, new discharger or a recommencing discharger, the applicant shall be without a permit for the proposed new facility, injection well, source or discharger pending final agency action. See also §124.60.

(2) Uncontested conditions which are not severable from those contested shall be stayed together with the contested conditions. Stayed provisions of permits for existing facilities, injection wells, and sources shall be identified by the Regional Administrator. All other provisions of the permit for the existing facility, injection well, or source shall remain fully effective and enforceable.

(b) *Stays based on cross effects.* (1) A stay may be granted based on the grounds that an appeal to the Administrator under §124.19 of one permit may result in changes to another EPA-issued permit only when each of the permits involved has been appealed to the Administrator and he or she has accepted each appeal.

(2) No stay of an EPA-issued RCRA, UIC, or NPDES permit shall be granted based on the staying of any State-issued permit except at the discretion of the Regional Administrator and only upon written request from the State Director.

(c) Any facility or activity holding an existing permit must:

(1) Comply with the conditions of that permit during any modification or

revocation and reissuance proceeding under § 124.5; and

(2) To the extent conditions of any new permit are stayed under this section, comply with the conditions of the existing permit which correspond to the stayed conditions, unless compliance with the existing conditions would be technologically incompatible with compliance with other conditions of the new permit which have not been stayed.

§ 124.17 Response to comments.

(a) *(Applicable to State programs, see §§ 123.25 (NPDES), 145.11 (UIC), 233.26 (404), and 271.14 (RCRA).)* At the time that any final permit decision is issued under § 124.15, the Director shall issue a response to comments. States are only required to issue a response to comments when a final permit is issued. This response shall:

(1) Specify which provisions, if any, of the draft permit have been changed in the final permit decision, and the reasons for the change; and

(2) Briefly describe and respond to all significant comments on the draft permit or the permit application (for section 404 permits only) raised during the public comment period, or during any hearing.

(b) For EPA-issued permits, any documents cited in the response to comments shall be included in the administrative record for the final permit decision as defined in § 124.18. If new points are raised or new material supplied during the public comment period, EPA may document its response to those matters by adding new materials to the administrative record.

(c) *(Applicable to State programs, see §§ 123.25 (NPDES), 145.11 (UIC), 233.26 (404), and 271.14 (RCRA).)* The response to comments shall be available to the public.

§ 124.18 Administrative record for final permit when EPA is the permitting authority.

(a) The Regional Administrator shall base final permit decisions under § 124.15 on the administrative record defined in this section.

(b) The administrative record for any final permit shall consist of the administrative record for the draft permit and:

(1) All comments received during the public comment period provided under § 124.10 (including any extension or reopening under § 124.14);

(2) The tape or transcript of any hearing(s) held under § 124.12;

(3) Any written materials submitted at such a hearing;

(4) The response to comments required by § 124.17 and any new material placed in the record under that section;

(5) For NPDES new source permits only, final environmental impact statement and any supplement to the final EIS;

(6) Other documents contained in the supporting file for the permit; and

(7) The final permit.

(c) The additional documents required under paragraph (b) of this section should be added to the record as soon as possible after their receipt or publication by the Agency. The record shall be complete on the date the final permit is issued.

(d) This section applies to all final RCRA, UIC, PSD, and NPDES permits when the draft permit was subject to the administrative record requirements of § 124.9 and to all NPDES permits when the draft permit was included in a public notice after October 12, 1979.

(e) Material readily available at the issuing Regional Office, or published materials which are generally available and which are included in the administrative record under the standards of this section or of § 124.17 (''Response to comments''), need not be physically included in the same file as the rest of the record as long as it is specifically referred to in the statement of basis or fact sheet or in the response to comments.

§ 124.19 Appeal of RCRA, UIC, and PSD permits.

(a) Within 30 days after a RCRA, UIC, or PSD final permit decision (or a decision under § 270.29 to deny a permit for the active life of a RCRA hazardous waste management facility or unit) has been issued under § 124.15, any person who filed comments on that draft permit or participated in the public hearing may petition the Environmental

Appeals Board to review any condition of the permit decision. Any person who failed to file comments or failed to participate in the public hearing on the draft permit may petition for administrative review only to the extent of the changes from the draft to the final permit decision. The 30-day period within which a person may request review under this section begins with the service of notice of the Regional Administrator's action unless a later date is specified in that notice. The petition shall include a statement of the reasons supporting that review, including a demonstration that any issues being raised were raised during the public comment period (including any public hearing) to the extent required by these regulations and when appropriate, a showing that the condition in question is based on:

(1) A finding of fact or conclusion of law which is clearly erroneous, or

(2) An exercise of discretion or an important policy consideration which the Environmental Appeals Board should, in its discretion, review.

(b) The Environmental Appeals Board may also decide on its initiative to review any condition of any RCRA, UIC, or PSD permit issued under this part. The Environmental Appeals Board must act under this paragraph within 30 days of the service date of notice of the Regional Administrator's action.

(c) Within a reasonable time following the filing of the petition for review, the Environmental Appeals Board shall issue an order granting or denying the petition for review. To the extent review is denied, the conditions of the final permit decision become final agency action. Public notice of any grant of review by the Environmental Appeals Board under paragraph (a) or (b) of this section shall be given as provided in § 124.10. Public notice shall set forth a briefing schedule for the appeal and shall state that any interested person may file an amicus brief. Notice of denial of review shall be sent only to the person(s) requesting review.

(d) The Environmental Appeals Board may defer consideration of an appeal of a RCRA or UIC permit under this section until the completion of formal proceedings under subpart E or F relating to an NPDES permit issued to the same facility or activity upon concluding that:

(1) The NPDES permit is likely to raise issues relevant to a decision of the RCRA or UIC appeals;

(2) The NPDES permit is likely to be appealed; and

(3) *Either:* (i) The interests of both the facility or activity and the public are not likely to be materially adversely affected by the deferral; or

(ii) Any adverse effect is outweighed by the benefits likely to result from a consolidated decision on appeal.

(e) A petition to the Environmental Appeals Board under paragraph (a) of this section is, under 5 U.S.C. 704, a prerequisite to the seeking of judicial review of the final agency action.

(f)(1) For purposes of judicial review under the appropriate Act, final agency action occurs when a final RCRA, UIC, or PSD permit is issued or denied by EPA and agency review procedures are exhausted. A final permit decision shall be issued by the Regional Administrator:

(i) When the Environmental Appeals Board issues notice to the parties that review has been denied;

(ii) When the Environmental Appeals Board issues a decision on the merits of the appeal and the decision does not include a remand of the proceedings; or

(iii) Upon the completion of remand proceedings if the proceedings are remanded, unless the Environmental Appeals Board's remand order specifically provides that appeal of the remand decision will be required to exhaust administrative remedies.

(2) Notice of any final agency action regarding a PSD permit shall promptly be published in the FEDERAL REGISTER.

(g) Motions to reconsider a final order shall be filed within ten (10) days after service of the final order. Every such motion must set forth the matters claimed to have been erroneously decided and the nature of the alleged errors. Motions for reconsideration under this provision shall be directed to, and decided by, the Environmental Appeals Board. Motions for reconsideration directed to the administrator, rather than to the Environmental Appeals Board, will not be considered, except in cases that the Environmental

Appeals Board has referred to the Administrator pursuant to § 124.2 and in which the Administrator has issued the final order. A motion for reconsideration shall not stay the effective date of the final order unless specifically so ordered by the Environmental Appeals Board.

[48 FR 14264, Apr. 1, 1983, as amended at 54 FR 9607, Mar. 7, 1989; 57 FR 5335, Feb. 13, 1992]

§ 124.20 Computation of time.

(a) Any time period scheduled to begin on the occurrence of an act or event shall begin on the day after the act or event.

(b) Any time period scheduled to begin before the occurrence of an act or event shall be computed so that the period ends on the day before the act or event.

(c) If the final day of any time period falls on a weekend or legal holiday, the time period shall be extended to the next working day.

(d) Whenever a party or interested person has the right or is required to act within a prescribed period after the service of notice or other paper upon him or her by mail, 3 days shall be added to the prescribed time.

§ 124.21 Effective date of part 124.

(a) Except for paragraphs (b) and (c) of this section, part 124 will become effective July 18, 1980. Because this effective date will precede the processing of any RCRA or UIC permits, part 124 will apply in its entirety to all RCRA and UIC permits.

(b) All provisions of part 124 pertaining to the RCRA program will become effective on November 19, 1980.

(c) All provisions of part 124 pertaining to the UIC program will become effective July 18, 1980, but shall not be implemented until the effective date of 40 CFR part 146.

(d) This part does not significantly change the way in which NPDES permits are processed. Since October 12, 1979, NPDES permits have been the subject to almost identical requirements in the revised NPDES regulations which were promulgated on June 7, 1979. See *44 FR 32948.* To the extent this part changes the revised NPDES permit regulations, those changes will take effect as to all permit proceedings in progress on July 3, 1980.

(e) This part also does not significantly change the way in which PSD permits are processed. For the most part, these regulations will also apply to PSD proceedings in progress on July 18, 1980. However, because it would be disruptive to require retroactively a formal administrative record for PSD permits issued without one, §§ 124.9 and 124.18 will apply to PSD permits for which draft permits were prepared after the effective date of these regulations.

Subpart B—Specific Procedures Applicable to RCRA Permits

SOURCE: 60 FR 63431, Dec. 11, 1995, unless otherwise noted.

§ 124.31 Pre-application public meeting and notice.

(a) *Applicability*. The requirements of this section shall apply to all RCRA part B applications seeking initial permits for hazardous waste management units over which EPA has permit issuance authority. The requirements of this section shall also apply to RCRA part B applications seeking renewal of permits for such units, where the renewal application is proposing a significant change in facility operations. For the purposes of this section, a ''significant change'' is any change that would qualify as a class 3 permit modification under 40 CFR 270.42. For the purposes of this section only, ''hazardous waste management units over which EPA has permit issuance authority'' refers to hazardous waste management units for which the State where the units are located has not been authorized to issue RCRA permits pursuant to 40 CFR part 271. The requirements of this section do not apply to permit modifications under 40 CFR 270.42 or to applications that are submitted for the sole purpose of conducting post-closure activities or post-closure activities and corrective action at a facility.

(b) Prior to the submission of a part B RCRA permit application for a facility, the applicant must hold at least one meeting with the public in order to solicit questions from the community

and inform the community of proposed hazardous waste management activities. The applicant shall post a sign-in sheet or otherwise provide a voluntary opportunity for attendees to provide their names and addresses.

(c) The applicant shall submit a summary of the meeting, along with the list of attendees and their addresses developed under paragraph (b) of this section, and copies of any written comments or materials submitted at the meeting, to the permitting agency as a part of the part B application, in accordance with 40 CFR 270.14(b).

(d) The applicant must provide public notice of the pre-application meeting at least 30 days prior to the meeting. The applicant must maintain, and provide to the permitting agency upon request, documentation of the notice.

(1) The applicant shall provide public notice in all of the following forms:

(i) *A newspaper advertisement.* The applicant shall publish a notice, fulfilling the requirements in paragraph (d)(2) of this section, in a newspaper of general circulation in the county or equivalent jurisdiction that hosts the proposed location of the facility. In addition, the Director shall instruct the applicant to publish the notice in newspapers of general circulation in adjacent counties or equivalent jurisdictions, where the Director determines that such publication is necessary to inform the affected public. The notice must be published as a display advertisement.

(ii) *A visible and accessible sign.* The applicant shall post a notice on a clearly marked sign at or near the facility, fulfilling the requirements in paragraph (d)(2) of this section. If the applicant places the sign on the facility property, then the sign must be large enough to be readable from the nearest point where the public would pass by the site.

(iii) *A broadcast media announcement.* The applicant shall broadcast a notice, fulfilling the requirements in paragraph (d)(2) of this section, at least once on at least one local radio station or television station. The applicant may employ another medium with prior approval of the Director.

(iv) *A notice to the permitting agency.* The applicant shall send a copy of the newspaper notice to the permitting agency and to the appropriate units of State and local government, in accordance with §124.10(c)(1)(x).

(2) The notices required under paragraph (d)(1) of this section must include:

(i) The date, time, and location of the meeting;

(ii) A brief description of the purpose of the meeting;

(iii) A brief description of the facility and proposed operations, including the address or a map (e.g., a sketched or copied street map) of the facility location;

(iv) A statement encouraging people to contact the facility at least 72 hours before the meeting if they need special access to participate in the meeting; and

(v) The name, address, and telephone number of a contact person for the applicant.

[60 FR 63431, Dec. 11, 1995]

§124.32 Public notice requirements at the application stage.

(a) *Applicability.* The requirements of this section shall apply to all RCRA part B applications seeking initial permits for hazardous waste management units over which EPA has permit issuance authority. The requirements of this section shall also apply to RCRA part B applications seeking renewal of permits for such units under 40 CFR 270.51. For the purposes of this section only, ''hazardous waste management units over which EPA has permit issuance authority'' refers to hazardous waste management units for which the State where the units are located has not been authorized to issue RCRA permits pursuant to 40 CFR part 271. The requirements of this section do not apply to permit modifications under 40 CFR 270.42 or permit applications submitted for the sole purpose of conducting post-closure activities or post-closure activities and corrective action at a facility.

(b) Notification at application submittal.

(1) The Director shall provide public notice as set forth in §124.10(c)(1)(ix), and notice to appropriate units of State and local government as set forth in §124.10(c)(1)(x), that a part B permit application has been submitted

to the Agency and is available for review.

(2) The notice shall be published within a reasonable period of time after the application is received by the Director. The notice must include:

(i) The name and telephone number of the applicant's contact person;

(ii) The name and telephone number of the permitting agency's contact office, and a mailing address to which information, opinions, and inquiries may be directed throughout the permit review process;

(iii) An address to which people can write in order to be put on the facility mailing list;

(iv) The location where copies of the permit application and any supporting documents can be viewed and copied;

(v) A brief description of the facility and proposed operations, including the address or a map (e.g., a sketched or copied street map) of the facility location on the front page of the notice; and

(vi) The date that the application was submitted.

(c) Concurrent with the notice required under § 124.32(b) of this subpart, the Director must place the permit application and any supporting documents in a location accessible to the public in the vicinity of the facility or at the permitting agency's office.

[60 FR 63432, Dec. 11, 1995]

§ 124.33 Information repository.

(a) *Applicability*. The requirements of this section apply to all applications seeking RCRA permits for hazardous waste management units over which EPA has permit issuance authority. For the purposes of this section only, ''hazardous waste management units over which EPA has permit issuance authority'' refers to hazardous waste management units for which the State where the units are located has not been authorized to issue RCRA permits pursuant to 40 CFR part 271.

(b) The Director may assess the need, on a case-by-case basis, for an information repository. When assessing the need for an information repository, the Director shall consider a variety of factors, including: the level of public interest; the type of facility; the presence of an existing repository; and the proximity to the nearest copy of the administrative record. If the Director determines, at any time after submittal of a permit application, that there is a need for a repository, then the Director shall notify the facility that it must establish and maintain an information repository. (See 40 CFR 270.30(m) for similar provisions relating to the information repository during the life of a permit).

(c) The information repository shall contain all documents, reports, data, and information deemed necessary by the Director to fulfill the purposes for which the repository is established. The Director shall have the discretion to limit the contents of the repository.

(d) The information repository shall be located and maintained at a site chosen by the facility. If the Director finds the site unsuitable for the purposes and persons for which it was established, due to problems with the location, hours of availability, access, or other relevant considerations, then the Director shall specify a more appropriate site.

(e) The Director shall specify requirements for informing the public about the information repository. At a minimum, the Director shall require the facility to provide a written notice about the information repository to all individuals on the facility mailing list.

(f) The facility owner/operator shall be responsible for maintaining and updating the repository with appropriate information throughout a time period specified by the Director. The Director may close the repository at his or her discretion, based on the factors in paragraph (b) of this section.

[60 FR 63432, Dec. 11, 1995]

Subpart C—Specific Procedures Applicable to PSD Permits

§ 124.41 Definitions applicable to PSD permits.

Whenever PSD permits are processed under this part, the following terms shall have the following meanings:

Administrator, EPA, and *Regional Administrator* shall have the meanings set forth in § 124.2, except when EPA has delegated authority to administer those regulations to another agency

under the applicable subsection of 40 CFR 52.21, the term *EPA* shall mean the delegate agency and the term *Regional Administrator* shall mean the chief administrative officer of the delegate agency.

Application means an application for a PSD permit.

Appropriate Act and Regulations means the Clean Air Act and applicable regulations promulgated under it.

Approved program means a State implementation plan providing for issuance of PSD permits which has been approved by EPA under the Clean Air Act and 40 CFR part 51. An *approved State* is one administering an *approved program*. *State Director* as used in § 124.4 means the person(s) responsible for issuing PSD permits under an approved program, or that person's delegated representative.

Construction has the meaning given in 40 CFR 52.21.

Director means the Regional Administrator.

Draft permit shall have the meaning set forth in § 124.2.

Facility or activity means a *major PSD stationary source* or *major PSD modification*.

Federal Land Manager has the meaning given in 40 CFR 52.21.

Indian Governing Body has the meaning given in 40 CFR 52.21.

Major PSD modification means a *major modification* as defined in 40 CFR 52.21.

Major PSD stationary source means a *major stationary source* as defined in 40 CFR 52.21(b)(1).

Owner or operator means the owner or operator of any facility or activity subject to regulation under 40 CFR 52.21 or by an approved State.

Permit or *PSD permit* means a permit issued under 40 CFR 52.21 or by an approved State.

Person includes an individual, corporation, partnership, association, State, municipality, political subdivision of a State, and any agency, department, or instrumentality of the United States and any officer, agent or employee thereof.

Regulated activity or *activity subject to regulation* means a *major PSD stationary source* or *major PSD modification*.

Site means the land or water area upon which a *major PSD stationary source* or *major PSD modification* is physically located or conducted, including but not limited to adjacent land used for utility systems; as repair, storage, shipping or processing areas; or otherwise in connection with the *major PSD stationary source* or *major PSD modification*.

State means a State, the District of Columbia, the Commonwealth of Puerto Rico, the Virgin Islands, Guam, and American Samoa and includes the Commonwealth of the Northern Mariana Islands.

§ 124.42 Additional procedures for PSD permits affecting Class I areas.

(a) The Regional Administrator shall provide notice of any permit application for a proposed major PSD stationary source or major PSD modification the emissions from which would affect a Class I area to the Federal Land Manager, and the Federal official charged with direct responsibility for management of any lands within such area. The Regional Administrator shall provide such notice promptly after receiving the application.

(b) Any demonstration which the Federal Land Manager wishes to present under 40 CFR 52.21(q)(3), and any variances sought by an owner or operator under § 52.21(q)(4) shall be submitted in writing, together with any necessary supporting analysis, by the end of the public comment period under § 124.10 or § 124.118. (40 CFR 52.21(q)(3) provides for denial of a PSD permit to a facility or activity when the Federal Land Manager demonstrates that its emissions would adversely affect a Class I area even though the applicable increments would not be exceeded. 40 CFR 52.21(q)(4) conversely authorizes EPA, with the concurrence of the Federal Land Manager and State responsible, to grant certain variances from the otherwise applicable emission limitations to a facility or activity whose emissions would affect a Class I area.)

(c) Variances authorized by 40 CFR 52.21 (q)(5) through (q)(7) shall be handled as specified in those paragraphs and shall not be subject to this part. Upon receiving appropriate documentation of a variance properly granted

under any of these provisions, the Regional Administrator shall enter the variance in the administrative record. Any decisions later made in proceedings under this part concerning that permit shall be consistent with the conditions of that variance.

Subpart D—Specific Procedures Applicable to NPDES Permits

§ 124.51 Purpose and scope.

(a) This subpart sets forth additional requirements and procedures for decisionmaking for the NPDES program.

(b) Decisions on NPDES variance requests ordinarily will be made during the permit issuance process. Variances and other changes in permit conditions ordinarily will be decided through the same notice-and-comment and hearing procedures as the basic permit.

(c) As stated in 40 CFR 131.4, an Indian Tribe that meets the statutory criteria which authorize EPA to treat the Tribe in a manner similar to that in which it treats a State for purposes of the Water Quality Standards program is likewise qualified for such treatment for purposes of State certification of water quality standards pursuant to section 401(a)(1) of the Act and subpart D of this part.

[48 FR 14264, Apr. 1, 1983, as amended at 58 FR 67983, Dec. 22, 1993; 59 FR 64343, Dec. 14, 1994]

§ 124.52 Permits required on a case-by-case basis.

(a) Various sections of part 122, subpart B allow the Director to determine, on a case-by-case basis, that certain concentrated animal feeding operations (§ 122.23), concentrated aquatic animal production facilities (§ l22.24), storm water discharges (§ 122.26), and certain other facilities covered by general permits (§ 122.28) that do not generally require an individual permit may be required to obtain an individual permit because of their contributions to water pollution.

(b) Whenever the Regional Administrator decides that an individual permit is required under this section, except as provided in paragraph (c) of this section, the Regional Administrator shall notify the discharger in writing of that decision and the reasons for it, and shall send an application form with the notice. The discharger must apply for a permit under § 122.21 within 60 days of notice, unless permission for a later date is granted by the Regional Administrator. The question whether the designation was proper will remain open for consideration during the public comment period under § 124.11 or § 124.118 and in any subsequent hearing.

(c) Prior to a case-by-case determination that an individual permit is required for a storm water discharge under this section (*see* 40 CFR 122.26 (a)(1)(v), (c)(1)(v), and (g)(1)(i)), the Regional Administrator may require the discharger to submit a permit application or other information regarding the discharge under section 308 of the CWA. In requiring such information, the Regional Administrator shall notify the discharger in writing and shall send an application form with the notice. The discharger must apply for a permit under 40 CFR 122.26 (a)(1)(v) and (c)(1)(v) within 60 days of notice or under 40 CFR 122.26(g)(1)(i) within 180 days of notice, unless permission for a later date is granted by the Regional Administrator. The question whether the initial designation was proper will remain open for consideration during the public comment period under § 124.11 or § 124.118 and in any subsequent hearing.

[55 FR 48075, Nov. 16, 1990, as amended at 60 FR 17957, Apr. 7, 1995; 60 FR 19464, Apr. 18, 1995; 60 FR 40235, Aug. 7, 1995]

§ 124.53 State certification.

(a) Under CWA section 401(a)(1), EPA may not issue a permit until a certification is granted or waived in accordance with that section by the State in which the discharge originates or will originate.

(b) Applications received without a State certification shall be forwarded by the Regional Administrator to the certifying State agency with a request that certification be granted or denied.

(c) If State certification has not been received by the time the draft permit is prepared, the Regional Administrator shall send the certifying State agency:

(1) A copy of a draft permit;

(2) A statement that EPA cannot issue or deny the permit until the certifying State agency has granted or denied certification under §124.55, or waived its right to certify; and

(3) A statement that the State will be deemed to have waived its right to certify unless that right is exercised within a specified reasonable time not to exceed 60 days from the date the draft permit is mailed to the certifying State agency unless the Regional Administrator finds that unusual circumstances require a longer time.

(d) State certification shall be granted or denied within the reasonable time specified under paragraph (c)(3) of this section. The State shall send a notice of its action, including a copy of any certification, to the applicant and the Regional Administrator.

(e) State certification shall be in writing and shall include:

(1) Conditions which are necessary to assure compliance with the applicable provisions of CWA sections 208(e), 301, 302, 303, 306, and 307 and with appropriate requirements of State law;

(2) When the State certifies a draft permit instead of a permit application, any conditions more stringent than those in the draft permit which the State finds necessary to meet the requirements listed in paragraph (e)(1) of this section. For each more stringent condition, the certifying State agency shall cite the CWA or State law references upon which that condition is based. Failure to provide such a citation waives the right to certify with respect to that condition; and

(3) A statement of the extent to which each condition of the draft permit can be made less stringent without violating the requirements of State law, including water quality standards. Failure to provide this statement for any condition waives the right to certify or object to any less stringent condition which may be established during the EPA permit issuance process.

§124.54 Special provisions for State certification and concurrence on applications for section 301(h) variances.

(a) When an application for a permit incorporating a variance request under CWA section 301(h) is submitted to a State, the appropriate State official shall either:

(1) Deny the request for the CWA section 301(h) variance (and so notify the applicant and EPA) and, if the State is an approved NPDES State and the permit is due for reissuance, process the permit application under normal procedures; or

(2) Forward a certification meeting the requirements of §124.53 to the Regional Administrator.

(b) When EPA issues a tentative decision on the request for a variance under CWA section 301(h), and no certification has been received under paragraph (a) of this section, the Regional Administrator shall forward the tentative decision to the State in accordance with §124.53(b) specifying a reasonable time for State certification and concurrence. If the State fails to deny or grant certification and concurrence under paragraph (a) of this section within such reasonable time, certification shall be waived and the State shall be deemed to have concurred in the issuance of a CWA section 301(h) variance.

(c) Any certification provided by a State under paragraph (a)(2) of this section shall constitute the State's concurrence (as required by section 301(h)) in the issuance of the permit incorporating a section 301(h) variance subject to any conditions specified therein by the State. CWA section 301(h) certification and concurrence under this section will not be forwarded to the State by EPA for recertification after the permit issuance process; States must specify any conditions required by State law, including water quality standards, in the initial certification.

§124.55 Effect of State certification.

(a) When certification is required under CWA section 401(a)(1) no final permit shall be issued:

(1) If certification is denied, or

(2) Unless the final permit incorporates the requirements specified in the certification under §124.53(d)(1) and (2).

(b) If there is a change in the State law or regulation upon which a certification is based, or if a court of competent jurisdiction or appropriate

State board or agency stays, vacates, or remands a certification, a State which has issued a certification under § 124.53 may issue a modified certification or notice of waiver and forward it to EPA. If the modified certification is received before final agency action on the permit, the permit shall be consistent with the more stringent conditions which are based upon State law identified in such certification. If the certification or notice of waiver is received after final agency action on the permit, the Regional Administrator may modify the permit on request of the permittee only to the extent necessary to delete any conditions based on a condition in a certification invalidated by a court of competent jurisdiction or by an appropriate State board or agency.

(c) A State may not condition or deny a certification on the grounds that State law allows a less stringent permit condition. The Regional Administrator shall disregard any such certification conditions, and shall consider those conditions or denials as waivers of certification.

(d) A condition in a draft permit may be changed during agency review in any manner consistent with a certification meeting the requirements of § 124.53(d). No such changes shall require EPA to submit the permit to the State for recertification.

(e) Review and appeals of limitations and conditions attributable to State certification shall be made through the applicable procedures of the State and may not be made through the procedures in this part.

(f) Nothing in this section shall affect EPA's obligation to comply with § 122.47. See CWA section 301(b)(1)(C).

§ 124.56 Fact sheets.

(Applicable to State programs, see § 123.25 (NPDES).) In addition to meeting the requirements of § 124.8, NPDES fact sheets shall contain the following:

(a) Any calculations or other necessary explanation of the derivation of specific effluent limitations and conditions or standards for sewage sludge use or disposal, including a citation to the applicable effluent limitation guideline, performance standard, or standard for sewage sludge use or disposal as required by § 122.44 and reasons why they are applicable or an explanation of how the alternate effluent limitations were developed.

(b)(1) When the draft permit contains any of the following conditions, an explanation of the reasons why such conditions are applicable:

(i) Limitations to control toxic pollutants under § 122.44(e);

(ii) Limitations on internal waste streams under § 122.45(i); or

(iii) Limitations on indicator pollutants under §125.3(g).

(iv) Limitations set on a case-by-case basis under § 125.3 (c)(2) or (c)(3), or pursuant to Section 405(d)(4) of the CWA.

(2) For every permit to be issued to a treatment works owned by a person other than a State or municipality, an explanation of the Director's decision on regulation of users under § 122.44(m).

(c) When appropriate, a sketch or detailed description of the location of the discharge or regulated activity described in the application; and

(d) For EPA-issued NPDES permits, the requirements of any State certification under § 124.53.

(e) For permits that include a sewage sludge land application plan under 40 CFR 501.15(a)(2)(ix), a brief description of how each of the required elements of the land application plan are addressed in the permit.

[48 FR 14264, Apr. 1, 1983, as amended at 49 FR 38051, Sept. 26, 1984; 54 FR 18786, May 2, 1989]

§ 124.57 Public notice.

(a) *Section 316(a) requests (applicable to State programs, see § 123.25).* In addition to the information required under § 124.10(d)(1), public notice of an NPDES draft permit for a discharge where a CWA section 316(a) request has been filed under § 122.21(l) shall include:

(1) A statement that the thermal component of the discharge is subject to effluent limitations under CWA section 301 or 306 and a brief description, including a quantitative statement, of the thermal effluent limitations proposed under section 301 or 306;

(2) A statement that a section 316(a) request has been filed and that alternative less stringent effluent limitations may be imposed on the thermal

component of the discharge under section 316(a) and a brief description, including a quantitative statement, of the alternative effluent limitations, if any, included in the request; and

(3) If the applicant has filed an early screening request under § 125.72 for a section 316(a) variance, a statement that the applicant has submitted such a plan.

(b) *Evidentiary hearings under subpart E.* In addition to the information required under § 124.10(d)(2), public notice of a hearing under subpart E shall include:

(1) Reference to any public hearing under § 124.12 on the disputed permit;

(2) Name and address of the person(s) requesting the evidentiary hearing;

(3) A statement of the following procedures:

(i) Any person seeking to be a party must file a request to be admitted as a party to the hearing within 15 days of the date of publication of the notice;

(ii) Any person seeking to be a party may, subject to the requirements of § 124.76, propose material issues of fact or law not already raised by the original requester or another party;

(iii) The conditions of the permit(s) at issue may be amended after the evidentiary hearing and any person interested in those permit(s) must request to be a party in order to preserve any right to appeal or otherwise contest the final administative decision.

(c) *Non-adversary panel procedures under subpart F.* (1) In addition to the information required under § 124.10(d)(2), mailed public notice of a draft permit to be processed under subpart F shall include a statement that any hearing shall be held under subpart F (panel hearing).

(2) Mailed public notice of a panel hearing under subpart F shall include:

(i) Name and address of the person requesting the hearing, or a statement that the hearing is being held by order of the Regional Administrator, and the name and address of each known party to the hearing;

(ii) A statement whether the recommended decision will be issued by the Presiding Officer or by the Regional Administrator;

(iii) The due date for filing a written request to participate in the hearing under § 124.117; and

(iv) The due date for filing comments under § 124.118.

[48 FR 14264, Apr. 1, 1983; 50 FR 6941, Feb. 19, 1985]

§ 124.58 [Reserved]

§ 124.59 Conditions requested by the Corps of Engineers and other government agencies.

(*Applicable to State programs, see § 123.25* (*NPDES*).)

(a) If during the comment period for an NPDES draft permit, the District Engineer advises the Director in writing that anchorage and navigation of any of the waters of the United States would be substantially impaired by the granting of a permit, the permit shall be denied and the applicant so notified. If the District Engineer advised the Director that imposing specified conditions upon the permit is necessary to avoid any substantial impairment of anchorage or navigation, then the Director shall include the specified conditions in the permit. Review or appeal of denial of a permit or of conditions specified by the District Engineer shall be made through the applicable procedures of the Corps of Engineers, and may not be made through the procedures provided in this part. If the conditions are stayed by a court of competent jurisdiction or by applicable procedures of the Corps of Engineers, those conditions shall be considered stayed in the NPDES permit for the duration of that stay.

(b) If during the comment period the U.S. Fish and Wildlife Service, the National Marine Fisheries Service, or any other State or Federal agency with jurisdiction over fish, wildlife, or public health advises the Director in writing that the imposition of specified conditions upon the permit is necessary to avoid substantial impairment of fish, shellfish, or wildlife resources, the Director may include the specified conditions in the permit to the extent they are determined necessary to carry out the provisions of § 122.49 and of the CWA.

(c) In appropriate cases the Director may consult with one or more of the

agencies referred to in this section before issuing a draft permit and may reflect their views in the statement of basis, the fact sheet, or the draft permit.

[48 FR 14264, Apr. 1, 1983, as amended at 54 FR 258, Jan. 4, 1989]

§ 124.60 Issuance and effective date and stays of NPDES permits.

In addition to the requirements of §124.15, the following provisions apply to NPDES permits and to RCRA or UIC permits to the extent those permits may have been consolidated with an NPDES permit in a formal hearing:

(a)(1) If a request for a formal hearing is granted under § 124.75 or § 124.114 regarding the initial permit issued for a new source, a new discharger, or a recommencing discharger, or if a petition for review of the denial of a request for a formal hearing with respect to such a permit is timely filed with the Administrator under § 124.91, the applicant shall be without a permit pending final Agency action under § 124.91.

(2) Whenever a source or facility subject to this paragraph or to paragraph (c)(7) of this section has received a final permit under § 124.15 which is the subject of a hearing request under § 124.74 or a formal hearing under § 124.75, the Presiding Officer, on motion by the source or facility, may issue an order authorizing it to begin discharges (or in the case of RCRA permits, construction or operations) if it complies with all uncontested conditions of the final permit and all other appropriate conditions imposed by the Presiding Officer during the period until final agency action. The motion shall be granted if no party opposes it, or if the source or facility demonstrates that:

(i) It is likely to receive a permit to discharge (or in the case of RCRA permits, to operate or construct) at that site;

(ii) The environment will not be irreparably harmed if the source or facility is allowed to begin discharging (or in the case of RCRA, to begin operating or construction) in compliance with the conditions of the Presiding Officer's order pending final agency action; and

(iii) Its discharge (or in the case of RCRA, its operation or construction) pending final agency action is in the public interest.

(3) *For RCRA only*, no order under paragraph (a)(2) may authorize a facility to commence construction if any party has challenged a construction-related permit term or condition.

(b) The Regional Administrator, at any time prior to the rendering of an initial decision in a formal hearing on a permit, may withdraw the permit and prepare a new draft permit under § 124.6 addressing the portions so withdrawn. The new draft permit shall proceed through the same process of public comment and opportunity for a public hearing as would apply to any other draft permit subject to this part. Any portions of the permit which are not withdrawn and which are not stayed under this section shall remain in effect.

(c)(1) If a request for a formal hearing is granted in whole or in part under § 124.75 regarding a permit for an existing source, or if a petition for review of the denial of a request for a formal hearing with respect to that permit is timely filed with the Administrator under § 124.91, the force and effect of the contested conditions of the final permit shall be stayed. The Regional Administrator shall notify, in accordance with § 124.75, the discharger and all parties of the uncontested conditions of the final permit that are enforceable obligations of the discharger.

(2) When effluent limitations are contested, but the underlying control technology is not, the notice shall identify the installation of the technology in accordance with the permit compliance schedules (if uncontested) as an uncontested, enforceable obligation of the permit.

(3) When a combination of technologies is contested, but a portion of the combination is not contested, that portion shall be identified as uncontested if compatible with the combination of technologies proposed by the requester.

(4) Uncontested conditions, if inseverable from a contested condition, shall be considered contested.

(5) Uncontested conditions shall become enforceable 30 days after the date

of notice under paragraph (c)(1) of this section granting the request. If, however, a request for a formal hearing on a condition was denied and the denial is appealed under § 124.91, then that condition shall become enforceable upon the date of the notice of the Administrator's decision on the appeal if the denial is affirmed, or shall be stayed, in accordance with this section, if the Administrator reverses the denial and grants the evidentiary hearing.

(6) Uncontested conditions shall include:

(i) Preliminary design and engineering studies or other requirements necessary to achieve the final permit conditions which do not entail substantial expenditures;

(ii) Permit conditions which will have to be met regardless of which party prevails at the evidentiary hearing;

(iii) When the discharger proposed a less stringent level of treatment than that contained in the final permit, any permit conditions appropriate to meet the levels proposed by the discharger, if the measures required to attain that less stringent level of treatment are consistent with the measures required to attain the limits proposed by any other party; and

(iv) Construction activities, such as segregation of waste streams or installation of equipment, which would partially meet the final permit conditions and could also be used to achieve the discharger's proposed alternative conditions.

(7) If for any offshore or coastal mobile exploratory drilling rig or coastal mobile developmental drilling rig which has never received a finally effective permit to discharge at a ''site,'' but which is not a ''new discharger'' or a ''new source,'' the Regional Administrator finds that compliance with certain permit conditions may be necessary to avoid irreparable environmental harm during the administrative review, he may specify in the statement of basis or fact sheet that those conditions, even if contested, shall remain enforceable obligations of the discharger during administrative review unless otherwise modified by the Presiding Officer under paragraph (a)(2) of this section.

(d) If at any time after a hearing is granted and after the Regional Administrator's notice under paragraph (c)(1) of this section it becomes clear that a permit requirement is no longer contested, any party may request the Presiding Officer to issue an order identifying the requirements as uncontested. The requirement identified in such order shall become enforceable 30 days after the issuance of the order.

(e) When a formal hearing is granted under § 124.75 on an application for a renewal of an existing permit, all provisions of the existing permit as well as uncontested provisions of the new permit, shall continue fully enforceable and effective until final agency action under § 124.91. (See § 122.6) Upon written request from the applicant, the Regional Administrator may delete requirements from the existing permit which unnecessarily duplicate uncontested provisions of the new permit.

(f) When issuing a finally effective NPDES permit the conditions of which were the subject of a formal hearing under subpart E or F, the Regional Administrator shall extend the permit compliance schedule to the extent required by a stay under this section provided that no such extension shall be granted which would:

(1) Result in the violation of an applicable statutory deadline; or

(2) Cause the permit to expire more than 5 years after issuance under § 124.15(a).

NOTE: Extensions of compliance schedules under § 124.60(f)(2) will not automatically be granted for a period equal to the period the stay is in effect for an effluent limitation. For example, if both the Agency and the discharger agree that a certain treatment technology is required by the CWA where guidelines do not apply, but a hearing is granted to consider the effluent limitations which the technology will achieve, requirements regarding installation of the underlying technology will not be stayed during the hearing. Thus, unless the hearing extends beyond the final compliance date in the permit, it will not ordinarily be necessary to extend the compliance schedule. However, when application of an underlying technology is challenged, the stay for installation requirements relating to that technology would extend for the duration of the hearing.

(g) For purposes of judicial review under CWA section 509(b), final agency action on a permit does not occur unless and until a party has exhausted its administrative remedies under subparts E and F and § 124.91. Any party which neglects or fails to seek review under § 124.91 thereby waives its opportunity to exhaust available agency remedies.

(Clean Water Act (33 U.S.C. 1251 *et seq.*), Safe Drinking Water Act (42 U.S.C. 300f *et seq.*), Clean Air Act (42 U.S.C. 7401 *et seq.*), Resource Conservation and Recovery Act (42 U.S.C. 6901 *et seq.*))

[48 FR 14264, Apr. 1, 1983, as amended at 48 FR 39620, Sept. 1, 1983]

§ 124.61 Final environmental impact statement.

No final NPDES permit for a new source shall be issued until at least 30 days after the date of issuance of a final environmental impact statement if one is required under 40 CFR 6.805.

§ 124.62 Decision on variances.

(*Applicable to State programs, see § 123.25 (NPDES).*)

(a) The Director may grant or deny requests for the following variances (subject to EPA objection under § 123.44 for State permits):

(1) Extensions under CWA section 301(i) based on delay in completion of a publicly owned treatment works;

(2) After consultation with the Regional Administrator, extensions under CWA section 301(k) based on the use of innovative technology; or

(3) Variances under CWA section 316(a) for thermal pollution.

(b) The State Director may deny, or forward to the Regional Administrator with a written concurrence, or submit to EPA without recommendation a completed request for:

(1) A variance based on the economic capability of the applicant under CWA section 301(c); or

(2) A variance based on water quality related effluent limitations under CWA section 302(b)(2).

(c) The Regional Administrator may deny, forward, or submit to the EPA Office Director for Water Enforcement and Permits with a recommendation for approval, a request for a variance listed in paragraph (b) of this section that is forwarded by the State Director, or that is submitted to the Regional Administrator by the requester where EPA is the permitting authority.

(d) The EPA Office Director for Water Enforcement and Permits may approve or deny any variance request submitted under paragraph (c) of this section. If the Office Director approves the variance, the Director may prepare a draft permit incorporating the variance. Any public notice of a draft permit for which a variance or modification has been approved or denied shall identify the applicable procedures for appealing that decision under § 124.64.

(e) The State Director may deny or forward to the Administrator (or his delegate) with a written concurrence a completed request for:

(1) A variance based on the presence of ''fundamentally different factors'' from those on which an effluent limitations guideline was based;

(2) A variance based upon certain water quality factors under CWA section 301(g).

(f) The Administrator (or his delegate) may grant or deny a request for a variance listed in paragraph (e) of this section that is forwarded by the State Director, or that is submitted to EPA by the requester where EPA is the permitting authority. If the Administrator (or his delegate) approves the variance, the State Director or Regional Administrator may prepare a draft permit incorporating the variance. Any public notice of a draft permit for which a variance or modification has been approved or denied shall identify the applicable procedures for appealing that decision under § 124.64.

[48 FR 14264, Apr. 1, 1983; 50 FR 6941, Feb. 19, 1985, as amended at 51 FR 16030, Apr. 30, 1986; 54 FR 256, 258, Jan. 4, 1989]

§ 124.63 Procedures for variances when EPA is the permitting authority.

(a) In States where EPA is the permit issuing authority and a request for a variance is filed as required by § 122.21, the request shall be processed as follows:

(1)(i) If, at the time, that a request for a variance based on the presence of fundamentally different factors or on

section 301(g) of the CWA is submitted, the Regional Administrator has received an application under §124.3 for issuance or renewal of that permit, but has not yet prepared a draft permit under §124.6 covering the discharge in question, the Administrator (or his delegate) shall give notice of a tentative decision on the request at the time the notice of the draft permit is prepared as specified in §124.10, unless this would significantly delay the processing of the permit. In that case the processing of the variance request may be separated from the permit in accordance with paragraph (a)(3) of this section, and the processing of the permit shall proceed without delay.

(ii) If, at the time, that a request for a variance under sections 301(c) or 302(b)(2) of the CWA is submitted, the Regional Administrator has received an application under §124.3 for issuance or renewal of that permit, but has not yet prepared a draft permit under §124.6 covering the discharge in question, the Regional Administrator, after obtaining any necessary concurrence of the EPA Deputy Assistant Administrator for Water Enforcement under §124.62, shall give notice of a tentative decision on the request at the time the notice of the draft permit is prepared as specified in §124.10, unless this would significantly delay the processing of the permit. In that case the processing of the variance request may be separated from the permit in accordance with paragraph (a)(3) of this section, and the processing of the permit shall proceed without delay.

(2) If, at the time that a request for a variance is filed the Regional Administrator has given notice under §124.10 of a draft permit covering the discharge in question, but that permit has not yet become final, administrative proceedings concerning that permit may be stayed and the Regional Administrator shall prepare a new draft permit including a tentative decision on the request, and the fact sheet required by §124.8. However, if this will significantly delay the processing of the existing draft permit or the Regional Administrator, for other reasons, considers combining the variance request and the existing draft permit inadvisable, the request may be separated from the permit in accordance with paragraph (a)(3) of this section, and the administrative dispositon of the existing draft permit shall proceed without delay.

(3) If the permit has become final and no application under §124.3 concerning it is pending or if the variance request has been separated from a draft permit as described in paragraphs (a) (1) and (2) of this section, the Regional Administrator may prepare a new draft permit and give notice of it under §124.10. This draft permit shall be accompanied by the fact sheet required by §124.8 except that the only matters considered shall relate to the requested variance.

[48 FR 14264, Apr. 1, 1983, as amended at 51 FR 16030, Apr. 30, 1986]

§124.64 Appeals of variances.

(a) When a State issues a permit on which EPA has made a variance decision, separate appeals of the State permit and of the EPA variance decision are possible. If the owner or operator is challenging the same issues in both proceedings, the Regional Administrator will decide, in consultation with State officials, which case will be heard first.

(b) Variance decisions made by EPA may be appealed under either subpart E or F, provided the requirements of the applicable subpart are met. However, whenever the basic permit decision is eligible only for an evidentiary hearing under subpart E while the variance decision is eligible only for a panel hearing under subpart F, the issues relating to both the basic permit decision and the variance decision shall be considered in the subpart E proceeding. No subpart F hearing may be held if a subpart E hearing would be held in addition. See §124.111(b).

(c) *Stays for section 301(g) variances.* If a request for an evidentiary hearing is granted on a variance requested under CWA section 301(g), or if a petition for review of the denial of a request for the hearing is filed under §124.91, any otherwise applicable standards and limitations under CWA section 301 shall not be stayed unless:

(1) In the judgment of the Regional Administrator, the stay or the variance sought will not result in the discharge of pollutants in quantities which may reasonably be anticipated to pose an unacceptable risk to human health or the environment because of bioaccumulation, persistency in the environment, acute toxicity, chronic toxicity, or synergistic propensities; and

(2) In the judgment of the Regional Administrator, there is a substantial likelihood that the discharger will succeed on the merits of its appeal; and

(3) The discharger files a bond or other appropriate security which is required by the Regional Administrator to assure timely compliance with the requirements from which a variance is sought in the event that the appeal is unsuccessful.

(d) Stays for variances other than section 301(g) are governed by § 124.60.

§ 124.65 [Reserved]

§ 124.66 Special procedures for decisions on thermal variances under section 316(a).

(a) Except as provided in § 124.65, the only issues connected with issuance of a particular permit on which EPA will make a final Agency decision before the final permit is issued under §§ 124.15 and 124.60 are whether alternative effluent limitations would be justified under CWA section 316(a) and whether cooling water intake structures will use the best available technology under section 316(b). Permit applicants who wish an early decision on these issues should request it and furnish supporting reasons at the time their permit applications are filed under § 122.21. The Regional Administrator will then decide whether or not to make an early decision. If it is granted, both the early decision on CWA section 316 (a) or (b) issues and the grant of the balance of the permit shall be considered permit issuance under these regulations, and shall be subject to the same requirements of public notice and comment and the same opportunity for an evidentiary or panel hearing under subpart E or F.

(b) If the Regional Administrator, on review of the administrative record, determines that the information necessary to decide whether or not the CWA section 316(a) issue is not likely to be available in time for a decision on permit issuance, the Regional Administrator may issue a permit under § 124.15 for a term up to 5 years. This permit shall require achievement of the effluent limitations initially proposed for the thermal component of the discharge no later than the date otherwise required by law. However, the permit shall also afford the permittee an opportunity to file a demonstration under CWA section 316(a) after conducting such studies as are required under 40 CFR part 125, subpart H. A new discharger may not exceed the thermal effluent limitation which is initially proposed unless and until its CWA section 316(a) variance request is finally approved.

(c) Any proceeding held under paragraph (a) of this section shall be publicly noticed as required by § 124.10 and shall be conducted at a time allowing the permittee to take necessary measures to meet the final compliance date in the event its request for modification of thermal limits is denied.

(d) Whenever the Regional Administrator defers the decision under CWA section 316(a), any decision under section 316(b) may be deferred.

Subpart E—Evidentiary Hearings for EPA-Issued NPDES Permits and EPA-Terminated RCRA Permits

§ 124.71 Applicability.

(a) The regulations in this subpart govern all formal hearings conducted by EPA under CWA sections 402 and 405(f), except those conducted under subpart F. They also govern all evidentiary hearings conducted under RCRA section 3008 in connection with the termination of a RCRA permit. This includes termination of interim status for failure to furnish information needed to make a final decision. A formal hearing is available to challenge any NPDES permit issued under § 124.15 except for a general permit. Persons affected by a general permit may not challenge the conditions of a general permit as of right in further agency proceedings. They may instead either challenge the general permit in

court, or apply for an individual NPDES permit under §122.21 as authorized in §122.28 and then request a formal hearing on the issuance or denial of an individual permit. (The Regional Administrator also has the discretion to use the procedures of subpart F for general permits. See §124.111).

(b) In certain cases, evidentiary hearings under this subpart may also be held on the conditions of UIC permits, or of RCRA permits which are being issued, modified, or revoked and reissued, rather than terminated or suspended. This will occur when the conditions of the UIC or RCRA permit in question are closely linked with the conditions of an NPDES permit as to which an evidentiary hearing has been granted. See §124.74(b)(2). Any interested person may challenge the Regional Administrator's initial new source determination by requesting an evidentiary hearing under this part. See §122.29.

(c) PSD permits may never be subject to an evidentiary hearing under this subpart. Section 124.74(b)(2)(iv) provides only for consolidation of PSD permits with other permits subject to a panel hearing under subpart F.

[48 FR 14264, Apr. 1, 1983, as amended at 54 FR 18786, May 2, 1989]

§124.72 Definitions.

For the purpose of this subpart, the following definitions are applicable:

Environmental Appeals Board shall mean the Board within the Agency described in §1.25 of this title. The Administrator delegates authority to the Environmental Appeals Board to issue final decisions in NPDES appeals filed under this subpart. An appeal directed to the Administrator, rather than to the Environmental Appeals Board, will not be considered. This delegation does not preclude the Environmental Appeals Board from referring an appeal or a motion to the Administrator when the Environmental Appeals Board, in its discretion, deems it appropriate to do so. When an appeal or motion is referred to the Administrator by the Environmental Appeals Board, all parties shall be so notified and the rules in this subpart referring to the Environmental Appeals Board shall be interpreted as referring to the Administrator.

Hearing Clerk means The Hearing Clerk, U.S. Environmental Protection Agency, 401 M Street, SW., Washington, DC 20460.

Party means the EPA trial staff under §124.78 and any person whose request for a hearing under §124.74 or whose request to be admitted as a party or to intervene under §124.79 or §124.117 has been granted.

Presiding Officer for the purposes of this subpart means an Administrative Law Judge appointed under 5 U.S.C. 3105 and designated to preside at the hearing. Under subpart F other persons may also serve as hearing officers. See §124.119.

Regional Hearing Clerk means an employee of the Agency designated by a Regional Administrator to establish a repository for all books, records, documents, and other materials relating to hearings under this subpart.

[48 FR 14264, Apr. 1, 1983, as amended at 57 FR 5335, Feb. 13, 1992]

§124.73 Filing and submission of documents.

(a) All submissions authorized or required to be filed with the Agency under this subpart shall be filed with the Regional Hearing Clerk, unless otherwise provided by regulation. Submissions shall be considered filed on the date on which they are mailed or delivered in person to the Regional Hearing Clerk.

(b) All submissions shall be signed by the person making the submission, or by an attorney or other authorized agent or representative.

(c)(1) All data and information referred to or in any way relied upon in any submission shall be included in full and may not be incorporated by reference, unless previously submitted as part of the administrative record in the same proceeding. This requirement does not apply to State or Federal statutes and regulations, judicial decisions published in a national reporter system, officially issued EPA documents of general applicability, and any other generally available reference material which may be incorporated by reference. Any party incorporating materials by reference shall provide copies

upon request by the Regional Administrator or the Presiding Officer.

(2) If any part of the material submitted is in a foreign language, it shall be accompanied by an English translation verified under oath to be complete and accurate, together with the name, address, and a brief statement of the qualifications of the person making the translation. Translations of literature or other material in a foreign language shall be accompanied by copies of the original publication.

(3) Where relevant data or information is contained in a document also containing irrelevant matter, either the irrelevant matter shall be deleted or the relevant portions shall be indicated.

(4) Failure to comply with the requirements of this section or any other requirement in this subpart may result in the noncomplying portions of the submission being excluded from consideration. If the Regional Administrator or the Presiding Officer, on motion by any party or *sua sponte*, determines that a submission fails to meet any requirement of this subpart, the Regional Administrator or Presiding Officer shall direct the Regional Hearing Clerk to return the submission, together with a reference to the applicable regulations. A party whose materials have been rejected has 14 days to correct the errors and resubmit, unless the Regional Administrator or the Presiding Officer finds good cause to allow a longer time.

(d) The filing of a submission shall not mean or imply that it in fact meets all applicable requirements or that it contains reasonable grounds for the action requested or that the action requested is in accordance with law.

(e) The original of all statements and documents containing factual material, data, or other information shall be signed in ink and shall state the name, address, and the representative capacity of the person making the submission.

§ 124.74 Requests for evidentiary hearing.

(a) Within 30 days following the service of notice of the Regional Administrator's final permit decision under § 124.15, any interested person may submit a request to the Regional Administrator under paragraph (b) of this section for an evidentiary hearing to reconsider or contest that decision. If such a request is submitted by a person other than the permittee, the person shall simultaneously serve a copy of the request on the permittee.

(b)(1) In accordance with § 124.76, such requests shall state each legal or factual question alleged to be at issue, and their relevance to the permit decision, together with a designation of the specific factual areas to be adjudicated and the hearing time estimated to be necessary for adjudication. Information supporting the request or other written documents relied upon to support the request shall be submitted as required by § 124.73 unless they are already part of the administrative record required by § 124.18.

NOTE: This paragraph allows the submission of requests for evidentiary hearings even though both legal and factual issues may be raised, or only legal issues may be raised. In the latter case, because no factual issues were raised, the Regional Administrator would be required to deny the request. However, on review of the denial the Environmental Appeals Board is authorized by § 124.91(a)(1) to review policy or legal conclusions of the Regional Administrator. EPA is requiring an appeal to the Environmental Appeals Board even of purely legal issues involved in a permit decision to ensure that the Environmental Appeals Board will have an opportunity to review any permit before it will be final and subject to judicial review.

(2) Persons requesting an evidentiary hearing on an NPDES permit under this section may also request an evidentiary hearing on a RCRA or UIC permit, PSD permits may never be made part of an evidentiary hearing under subpart E. This request is subject to all the requirements of paragraph (b)(1) of this section and in addition will be granted only if:

(i) Processing of the RCRA or UIC permit at issue was consolidated with the processing of the NPDES permit as provided in § 124.4;

(ii) The standards for granting a hearing on the NPDES permit are met;

(iii) The resolution of the NPDES permit issues is likely to make necessary or appropriate modification of the RCRA or UIC permit; and

(iv) If a PSD permit is involved, a permittee who is eligible for an evidentiary hearing under subpart E on his or her NPDES permit requests that the formal hearing be conducted under the procedures of subpart F and the Regional Administrator finds that consolidation is unlikly to delay final permit issuance beyond the PSD one-year statutory deadline.

(c) These requests shall also contain:

(1) The name, mailing address, and telephone number of the person making such request;

(2) A clear and concise factual statement of the nature and scope of the interest of the requester;

(3) The names and addresses of all persons whom the requester represents; and

(4) A statement by the requester that, upon motion of any party granted by the Presiding Officer, or upon order of the Presiding Officer *sua sponte* without cost or expense to any other party, the requester shall make available to appear and testify, the following:

(i) The requester;

(ii) All persons represented by the requester; and

(iii) All officers, directors, employees, consultants, and agents of the requester and the persons represented by the requester.

(5) Specific references to the contested permit conditions, as well as suggested revised or alternative permit conditions (including permit denials) which, in the judgment of the requester, would be required to implement the purposes and policies of the CWA.

(6) In the case of challenges to the application of control or treatment technologies identified in the statement of basis or fact sheet, identification of the basis for the objection, and the alternative technologies or combination of technologies which the requester believes are necessary to meet the requirements of the CWA.

(7) Identification of the permit obligations that are contested or are inseverable from contested conditions and should be stayed if the request is granted by reference to the particular contested conditions warranting the stay.

(8) Hearing requests also may ask that a formal hearing be held under the procedures set forth in subpart F. An applicant may make such a request even if the proceeding does not constitute ''initial licensing'' as defined in §124.111.

(d) If the Regional Administrator grants an evidentiary hearing request, in whole or in part, the Regional Administrator shall identify the permit conditions which have been contested by the requester and for which the evidentiary hearing has been granted. Permit conditions which are not contested or for which the Regional Administrator has denied the hearing request shall not be affected by, or considered at, the evidentiary hearing. The Regional Administrator shall specify these conditions in writing in accordance with §124.60(c).

(e) The Regional Administrator must grant or deny all requests for an evidentiary hearing on a particular permit. All requests that are granted for a particular permit shall be combined in a single evidentiary hearing.

(f) The Regional Administrator (upon notice to all persons who have already submitted hearing requests) may extend the time allowed for submitting hearing requests under this section for good cause.

[48 FR 14264, Apr. 1, 1983, as amended at 57 FR 5336, Feb. 13, 1992]

§124.75 Decision on request for a hearing.

(a)(1) Within 30 days following the expiration of the time allowed by §124.74 for submitting an evidentiary hearing request, the Regional Administrator shall decide the extent to which, if at all, the request shall be granted, provided that the request conforms to the requirements of §124.74, and sets forth material issues of fact relevant to the issuance of the permit.

(2) When an NPDES permit for which a hearing request has been granted constitutes ''initial licensing'' under §124.111, the Regional Administrator may elect to hold a formal hearing under the procedures of subpart F rather than under the procedures of this subpart even if no person has requested

that subpart F be applied. If the Regional Administrator makes such a decision, he or she shall issue a notice of hearing under § 124.116. All subsequent proceedings shall then be governed by §§ 124.117 through 124.121, except that any reference to a draft permit shall mean the final permit.

(3) Whenever the Regional Administrator grants a request made under § 124.74(c)(8) for a formal hearing under subpart F on an NPDES permit that does not constitute an initial license under § 124.111, the Regional Administrator shall issue a notice of hearing under § 124.116 including a statement that the permit will be processed under the procedures of subpart F unless a written objection is received within 30 days. If no valid objection is received, the application shall be processed in accordance with §§ 124.117 through 124.121, except that any reference to a draft permit shall mean the final permit. If a valid objection is received, this subpart shall be applied instead.

(b) If a request for a hearing is denied in whole or in part, the Regional Administrator shall briefly state the reasons. That denial is subject to review by the Environmental Appeals Board under § 124.91.

[48 FR 14264, Apr. 1, 1983, as amended at 57 FR 5336, Feb. 13, 1992]

§ 124.76 Obligation to submit evidence and raise issues before a final permit is issued.

In any case where the Regional Administrator elected to apply the requirements of § 124.14(a), no evidence shall be submitted by any party to a hearing under this Subpart that was not submitted to the administrative record required by § 124.18 as part of the preparation of and comment on a draft permit, unless good cause is shown for the failure to submit it. No issues shall be raised by any party that were not submitted to the administrative record required by § 124.18 as part of the preparation of and comment on a draft permit unless good cause is shown for the failure to submit them. Good cause includes the case where the party seeking to raise the new issues or introduce new information shows that it could not reasonably have ascertained the issues or made the information available within the time required by § 124.15; or that it could not have reasonably anticipated the relevance or materiality of the information sought to be introduced. Good cause exists for the introduction of data available on operation authorized under § 124.60(a)(2).

[49 FR 38051, Sept. 26, 1984]

§ 124.77 Notice of hearing.

Public notice of the grant of an evidentiary hearing regarding a permit shall be given as provided in § 124.57(b) and by mailing a copy to all persons who commented on the draft permit, testified at the public hearing, or submitted a request for a hearing. Before the issuance of the notice, the Regional Administrator shall designate the Agency trial staff and the members of the decisional body (as defined in § 124.78).

§ 124.78 Ex parte communications.

(a) For purposes of this section, the following definitions shall apply:

(1) *Agency trial staff* means those Agency employees, whether temporary or permanent, who have been designated by the Agency under § 124.77 or § 124.116 as available to investigate, litigate, and present the evidence, arguments, and position of the Agency in the evidentiary hearing or non-adversary panel hearing. Any EPA employee, consultant, or contractor who is called as a witness by EPA trial staff, or who assisted in the formulation of the draft permit which is the subject of the hearing, shall be designated as a member of the Agency trial staff;

(2) *Decisional body* means any Agency employee who is or may reasonably be expected to be involved in the decisional process of the proceeding including the Administrator, the members of the Environmental Appeals Board, the Presiding Officer, the Regional Administrator (if he or she does not designate himself or herself as a member of the Agency trial staff), and any of their staff participating in the decisional process. In the case of a non-adversary panel hearing, the decisional body shall also include the panel members, whether or not permanently employed by the Agency;

(3) *Ex parte communication* means any communication, written or oral, relating to the merits of the proceeding between the decisional body and an interested person outside the Agency or the Agency trial staff which was not originally filed or stated in the administrative record or in the hearing. *Ex parte* communications do not include:

(i) Communications between Agency employees other than between the Agency trial staff and the members of the decisional body;

(ii) Discussions between the decisional body and either:

(A) Interested persons outside the Agency, or

(B) The Agency trial staff, *if* all parties have received prior written notice of the proposed communications and have been given the opportunity to be present and participate therein.

(4) *Interested person outside the Agency* includes the permit applicant, any person who filed written comments in the proceeding, any person who requested the hearing, any person who requested to participate or intervene in the hearing, any participant in the hearing and any other interested person not employed by the Agency at the time of the communications, and any attorney of record for those persons.

(b)(1) No interested person outside the Agency or member of the Agency trial staff shall make or knowingly cause to be made to any members of the decisional body, an *ex parte* communication on the merits of the proceedings.

(2) No member of the decisional body shall make or knowingly cause to be made to any interested person outside the Agency or member of the Agency trial staff, an *ex parte* communication on the merits of the proceedings.

(3) A member of the decisional body who receives or who makes or who knowingly causes to be made a communication prohibited by this subsection shall file with the Regional Hearing Clerk all written communications or memoranda stating the substance of all oral communications together with all written responses and memoranda stating the substance of all oral responses.

(c) Whenever any member of the decisionmaking body receives an *ex parte* communication knowingly made or knowingly caused to be made by a party or representative of a party in violation of this section, the person presiding at the stage of the hearing then in progress may, to the extent consistent with justice and the policy of the CWA, require the party to show cause why its claim or interest in the proceedings should not be dismissed, denied, disregarded, or otherwise adversely affected on account of such violation.

(d) The prohibitions of this section begin to apply upon issuance of the notice of the grant of a hearing under § 124.77 or § 124.116. This prohibition terminates at the date of final agency action.

[48 FR 14264, Apr. 1, 1983, as amended at 49 FR 38052, Sept. 26, 1984; 57 FR 5336, Feb. 13, 1992]

§ 124.79 Additional parties and issues.

(a) Any person may submit a request to be admitted as a party within 15 days after the date of mailing, publication, or posting of notice of the grant of an evidentiary hearing, whichever occurs last. The Presiding Officer shall grant requests that meet the requirements of §§ 124.74 and 124.76.

(b) After the expiration of the time prescribed in paragraph (a) of this section any person may file a motion for leave to intervene as a party. This motion must meet the requirements of §§ 124.74 and 124.76 and set forth the grounds for the proposed intervention. No factual or legal issues, besides those raised by timely hearing requests, may be proposed except for good cause. A motion for leave to intervene must also contain a verified statement showing good cause for the failure to file a timely request to be admitted as a party. The Presiding Officer shall grant the motion only upon an express finding on the record that:

(1) Extraordinary circumstances justify granting the motion;

(2) The intervener has consented to be bound by:

(i) Prior written agreements and stipulations by and between the existing parties; and

(ii) All orders previously entered in the proceedings; and

(3) Intervention will not cause undue delay or prejudice the rights of the existing parties.

§ 124.80 Filing and service.

(a) An original and one (1) copy of all written submissions relating to an evidentiary hearing filed after the notice is published shall be filed with the Regional Hearing Clerk.

(b) The party filing any submission shall also serve a copy of each submission upon the Presiding Officer and each party of record. Service shall be by mail or personal delivery.

(c) Every submission shall be accompanied by an acknowledgment of service by the person served or a certificate of service citing the date, place, time, and manner of service and the names of the persons served.

(d) The Regional Hearing Clerk shall maintain and furnish a list containing the name, service address, and telephone number of all parties and their attorneys or duly authorized representatives to any person upon request.

§ 124.81 Assignment of Administrative Law Judge.

No later than the date of mailing, publication, or posting of the notice of a grant of an evidentiary hearing, whichever occurs last, the Regional Administrator shall refer the proceeding to the Chief Administrative Law Judge who shall assign an Administrative Law Judge to serve as Presiding Officer for the hearing.

§ 124.82 Consolidation and severance.

(a) The Administrator, Regional Administrator, or Presiding Officer has the discretion to consolidate, in whole or in part, two or more proceedings to be held under this subpart, whenever it appears that a joint hearing on any or all of the matters in issue would expedite or simplify consideration of the issues and that no party would be prejudiced thereby. Consolidation shall not affect the right of any party to raise issues that might have been raised had there been no consolidation.

(b) If the Presiding Officer determines consolidation is not conducive to an expeditious, full, and fair hearing, any party or issues may be severed and heard in a separate proceeding.

§ 124.83 Prehearing conferences.

(a) The Presiding Officer, *sua sponte,* or at the request of any party, may direct the parties or their attorneys or duly authorized representatives to appear at a specified time and place for one or more conferences before or during a hearing, or to submit written proposals or correspond for the purpose of considering any of the matters set forth in paragraph (c) of this section.

(b) The Presiding Officer shall allow a reasonable period before the hearing begins for the orderly completion of all prehearing procedures and for the submission and disposition of all prehearing motions. Where the circumstances warrant, the Presiding Officer may call a prehearing conference to inquire into the use of available procedures contemplated by the parties and the time required for their completion, to establish a schedule for their completion, and to set a tentative date for beginning the hearing.

(c) In conferences held, or in suggestions submitted, under paragraph (a) of this section, the following matter may be considered:

(1) Simplification, clarification, amplification, or limitation of the issues.

(2) Admission of facts and of the genuineness of documents, and stipulations of facts.

(3) Objections to the introduction into evidence at the hearing of any written testimony, documents, papers, exhibits, or other submissions proposed by a party, except that the administrative record required by § 124.19 shall be received in evidence subject to the provisions of § 124.85(d)(2). At any time before the end of the hearing any party may make, and the Presiding Officer shall consider and rule upon, motions to strike testimony or other evidence other than the administrative record on the grounds of relevance, competency, or materiality.

(4) Matters subject to official notice may be taken.

(5) Scheduling as many of the following as are deemed necessary and proper by the Presiding Officer:

(i) Submission of narrative statements of position on each factual issue in controversy;

(ii) Submission of written testimony and documentary evidence (e.g., affidavits, data, studies, reports, and any other type of written material) in support of those statements; or

(iii) Requests by any party for the production of additional documentation, data, or other information relevant and material to the facts in issue.

(6) Grouping participants with substantially similar interests to eliminate redundant evidence, motions, and objections.

(7) Such other matters that may expedite the hearing or aid in the disposition of the matter.

(d) At a prehearing conference or at some other reasonable time set by the Presiding Officer, each party shall make available to all other parties the names of the expert and other witnesses it expects to call. At its discretion or at the request of the Presiding Officer, a party may include a brief narrative summary of any witness's anticipated testimony. Copies of any written testimony, documents, papers, exhibits, or materials which a party expects to introduce into evidence, and the administrative record required by §124.18 shall be marked for identification as ordered by the Presiding Officer. Witnesses, proposed written testimony, and other evidence may be added or amended upon order of the Presiding Officer for good cause shown. Agency employees and consultants shall be made available as witnesses by the Agency to the same extent that production of such witnesses is required of other parties under §124.74(c)(4). (See also §124.85(b)(16).)

(e) The Presiding Officer shall prepare a written prehearing order reciting the actions taken at each prehearing conference and setting forth the schedule for the hearing, unless a transcript has been taken and accurately reflects these matters. The order shall include a written statement of the areas of factual agreement and disagreement and of the methods and procedures to be used in developing the evidence and the respective duties of the parties in connection therewith. This order shall control the subsequent course of the hearing unless modified by the Presiding Officer for good cause shown.

§124.84 Summary determination.

(a) Any party to an evidentiary hearing may move with or without supporting affidavits and briefs for a summary determination in its favor upon any of the issues being adjudicated on the basis that there is no genuine issue of material fact for determination. This motion shall be filed at least 45 days before the date set for the hearing, except that upon good cause shown the motion may be filed at any time before the close of the hearing.

(b) Any other party may, within 30 days after service of the motion, file and serve a response to it or a countermotion for summary determination. When a motion for summary determination is made and supported, a party opposing the motion may not rest upon mere allegations or denials but must show, by affidavit or by other materials subject to consideration by the Presiding Officer, that there is a genuine issue of material fact for determination at the hearing.

(c) Affidavits shall be made on personal knowledge, shall set forth facts that would be admissible in evidence, and shall show affirmatively that the affiant is competent to testify to the matters stated therein.

(d) The Presiding Officer may set the matter for oral argument and call for the submission of proposed findings, conclusions, briefs, or memoranda of law. The Presiding Officer shall rule on the motion not more than 30 days after the date responses to the motion are filed under paragraph (b) of this section.

(e) If all factual issues are decided by summary determination, no hearing will be held and the Presiding Officer shall prepare an initial decision under §124.89. If summary determination is denied or if partial summary determination is granted, the Presiding Officer shall issue a memorandum opinion and order, interlocutory in character, and the hearing will proceed on the remaining issues. Appeals from interlocutory rulings are governed by §124.90.

(f) Should it appear from the affidavits of a party opposing a motion for

summary determination that he or she cannot for reasons stated present, by affidavit or otherwise, facts essential to justify his or her opposition, the Presiding Officer may deny the motion or order a continuance to allow additional affidavits or other information to be obtained or may make such other order as is just and proper.

§ 124.85 Hearing procedure.

(a)(1) The permit applicant always bears the burden of persuading the Agency that a permit authorizing pollutants to be discharged should be issued and not denied. This burden does not shift.

NOTE: In many cases the documents contained in the administrative record, in particular the fact sheet or statement of basis and the response to comments, should adequately discharge this burden.

(2) The Agency has the burden of going forward to present an affirmative case in support of any challenged condition of a final permit.

(3) Any hearing participant who, by raising material issues of fact, contends:

(i) That particular conditions or requirements in the permit are improper or invalid, and who desires either:

(A) The inclusion of new or different conditions or requirements; or

(B) The deletion of those conditions or requirements; or

(ii) That the denial or issuance of a permit is otherwise improper or invalid, shall have the burden of going forward to present an affirmative case at the conclusion of the Agency case on the challenged requirement.

(b) The Presiding Officer shall conduct a fair and impartial hearing, take action to avoid unnecessary delay in the disposition of the proceedings, and maintain order. For these purposes, the Presiding Officer may:

(1) Arrange and issue notice of the date, time, and place of hearings and conferences;

(2) Establish the methods and procedures to be used in the development of the evidence;

(3) Prepare, after considering the views of the participants, written statements of areas of factual disagreement among the participants;

(4) Hold conferences to settle, simplify, determine, or strike any of the issues in a hearing, or to consider other matters that may facilitate the expeditious disposition of the hearing;

(5) Administer oaths and affirmations;

(6) Regulate the course of the hearing and govern the conduct of participants;

(7) Examine witnesses;

(8) Identify and refer issues for interlocutory decision under § 124.90;

(9) Rule on, admit, exclude, or limit evidence;

(10) Establish the time for filing motions, testimony, and other written evidence, briefs, findings, and other submissions;

(11) Rule on motions and other procedural matters pending before him, including but not limited to motions for summary determination in accordance with § 124.84;

(12) Order that the hearing be conducted in stages whenever the number of parties is large or the issues are numerous and complex;

(13) Take any action not inconsistent with the provisions of this subpart for the maintenance of order at the hearing and for the expeditious, fair, and impartial conduct of the proceeding;

(14) Provide for the testimony of opposing witnesses to be heard simultaneously or for such witnesses to meet outside the hearing to resolve or isolate issues or conflicts;

(15) Order that trade secrets be treated as confidential business information in accordance with §§ 122.7 (NPDES) and 270.12 (RCRA) and 40 CFR part 2; and

(16) Allow such cross-examination as may be required for a full and true disclosure of the facts. No cross-examination shall be allowed on questions of policy except to the extent required to disclose the factual basis for permit requirements, or on questions of law, or regarding matters (such as the validity of effluent limitations guidelines) that are not subject to challenge in an evidentiary hearing. No Agency witnesses shall be required to testify or be made available for cross-examination on such matters. In deciding whether or not to allow cross-examination, the Presiding Officer shall consider the likelihood of clarifying or resolving a

disputed issue of material fact compared to other available methods. The party seeking cross-examination has the burden of demonstrating that this standard has been met.

(c) All direct and rebuttal evidence at an evidentiary hearing shall be submitted in written form, unless, upon motion and good cause shown, the Presiding Officer determines that oral presentation of the evidence on any particular fact will materially assist in the efficient identification and clarification of the issues. Written testimony shall be prepared in narrative form.

(d)(1) The Presiding Officer shall admit all relevant, competent, and material evidence, except evidence that is unduly repetitious. Evidence may be received at any hearing even though inadmissible under the rules of evidence applicable to judicial proceedings. The weight to be given evidence shall be determined by its reliability and probative value.

(2) The administrative record required by § 124.18 shall be admitted and received in evidence. Upon motion by any party the Presiding Officer may direct that a witness be provided to sponsor a portion or portions of the administrative record. The Presiding Officer, upon finding that the standards in § 124.85(b)(3) have been met, shall direct the appropriate party to produce the witness for cross-examination. If a sponsoring witness cannot be provided, the Presiding Officer may reduce the weight accorded the appropriate portion of the record.

NOTE: Receiving the administrative record into evidence automatically serves several purposes: (1) It documents the prior course of the proceedings; (2) it provides a record of the views of affected persons for consideration by the agency decisionmaker; and (3) it provides factual material for use by the decisionmaker.

(3) Whenever any evidence or testimony is excluded by the Presiding Officer as inadmissible, all such evidence or testimony existing in written form shall remain a part of the record as an offer of proof. The party seeking the admission of oral testimony may make an offer of proof, by means of a brief statement on the record describing the testimony excluded.

(4) When two or more parties have substantially similar interests and positions, the Presiding Officer may limit the number of attorneys or other party representatives who will be permitted to cross-examine and to make and argue motions and objections on behalf of those parties. Attorneys may, however, engage in cross-examination relevant to matters not adequately covered by previous cross-examination.

(5) Rulings of the Presiding Officer on the admissibility of evidence or testimony, the propriety of cross-examination, and other procedural matters shall appear in the record and shall control further proceedings, unless reversed as a result of an interlocutory appeal taken under § 124.90.

(6) All objections shall be made promptly or be deemed waived. Parties shall be presumed to have taken exception to an adverse ruling. No objection shall be deemed waived by further participation in the hearing.

(e) *Admission of evidence on environmental impacts.* If a hearing is granted under this subpart for a new source subject to NEPA, the Presiding Officer may admit evidence relevant to any environmental impacts of the permitted facility if the evidence would be relevant to the Agency's obligation under § 122.29(c)(3). If the source holds a final EPA-issued RCRA, PSD, or UIC permit, or an ocean dumping permit under the Marine Protection, Research, and Sanctuaries Act (MPRSA), no such evidence shall be admitted nor shall cross-examination be allowed relating to:

(1) Effects on air quality, (2) effects attributable to underground injection or hazardous waste management practices, or (3) effects of ocean dumping subject to the MPRSA, which were considered or could have been considered in the PSD, RCRA, UIC, or MPRSA permit issuance proceedings. However, the presiding officer may admit without cross-examination or any supporting witness relevant portions of the record of PSD, RCRA, UIC, or MPRSA permit issuance proceedings.

[48 FR 14264, Apr. 1, 1983, as amended at 49 FR 38052, Sept. 26, 1984]

§ 124.86 Motions.

(a) Any party may file a motion (including a motion to dismiss a particular claim on a contested issue) with the Presiding Officer on any matter relating to the proceeding. All motions shall be in writing and served as provided in § 124.80 except those made on the record during an oral hearing before the Presiding Officer.

(b) Within 10 days after service of any written motion, any part to the proceeding may file a response to the motion. The time for response may be shortened to 3 days or extended for an additional 10 days by the Presiding Officer for good cause shown.

(c) Notwithstanding § 122.4, any party may file with the Presiding Officer a motion seeking to apply to the permit any regulatory or statutory provision issued or made available after the issuance of the permit under § 124.15. The Presiding Officer shall grant any motion to apply a new statutory provision unless he or she finds it contrary to legislative intent. The Presiding Officer may grant a motion to apply a new regulatory requirement when appropriate to carry out the purpose of CWA, and when no party would be unduly prejudiced thereby.

§ 124.87 Record of hearings.

(a) All orders issued by the Presiding Officer, transcripts of oral hearings or arguments, written statements of position, written direct and rebuttal testimony, and any other data, studies, reports, documentation, information and other written material of any kind submitted in the proceeding shall be a part of the hearing record and shall be available to the public except as provided in §§ 122.7 (NPDES) and 270.12 (RCRA), in the Office of the Regional Hearing Clerk, as soon as it is received in that office.

(b) Evidentiary hearings shall be either stenographically reported verbatim or tape recorded, and thereupon transcribed. After the hearing, the reporter shall certify and file with the Regional Hearing Clerk:

(1) The original of the transcript, and

(2) The exhibits received or offered into evidence at the hearing.

(c) The Regional Hearing Clerk shall promptly notify each of the parties of the filing of the certified transcript of proceedings. Any party who desires a copy of the transcript of the hearing may obtain a copy of the hearing transcript from the Regional Hearing Clerk upon payment of costs.

(d) The Presiding Officer shall allow witnesses, parties, and their counsel an opportunity to submit such written proposed corrections of the transcript of any oral testimony taken at the hearing, pointing out errors that may have been made in transcribing the testimony, as are required to make the transcript conform to the testimony. Except in unusual cases, no more than 30 days shall be allowed for submitting such corrections from the day a complete transcript of the hearing becomes available.

§ 124.88 Proposed findings of fact and conclusions; brief.

Within 45 days after the certified transcript is filed, any party may file with the Regional Hearing Clerk proposed findings of fact and conclusions of law and a brief in support thereof. Briefs shall contain appropriate references to the record. A copy of these findings, conclusions, and brief shall be served upon all the other parties and the Presiding Officer. The Presiding Officer, for good cause shown, may extend the time for filing the proposed findings and conclusions and/or the brief. The Presiding Officer may allow reply briefs.

§ 124.89 Decisions.

(a) The Presiding Officer shall review and evaluate the record, including the proposed findings and conclusions, any briefs filed by the parties, and any interlocutory decisions under § 124.90 and shall issue and file his initial decision with the Regional Hearing Clerk. The Regional Hearing Clerk shall immediately serve copies of the initial decision upon all parties (or their counsel of record) and the Administrator.

(b) The initial decision of the Presiding Officer shall automatically become the final decision 30 days after its service unless within that time:

(1) A party files a petition for review by the Environmental Appeals Board pursuant to § 124.91; or

(2) The Environmental Appeals Board *sua sponte* files a notice that it will review the decision pursuant to § 124.91.

[48 FR 14264, Apr. 1, 1983, as amended at 57 FR 5336, Feb. 13, 1992]

§ 124.90 Interlocutory appeal.

(a) Except as provided in this section, appeals to the Environmental Appeals Board may be taken only under § 124.91. Appeals from orders or rulings may be taken under this section only if the Presiding Officer, upon motion of a party, certifies those orders or rulings to the Environmental Appeals Board for appeal on the record. Requests to the Presiding Officer for certification must be filed in writing within 10 days of service of notice of the order, ruling, or decision and shall state briefly the grounds relied on.

(b) The Presiding Officer may certify an order or ruling for appeal to the Environmental Appeals Board if:

(1) The order or ruling involves an important question on which there is substantial ground for difference of opinion, and

(2) *Either:* (i) An immediate appeal of the order or ruling will materially advance the ultimate completion of the proceeding; or

(ii) A review after the final order is issued will be inadequate or ineffective.

(c) If the Environmental Appeals Board decides that certification was improperly granted, it shall decline to hear the appeal. The Environmental Appeals Board shall accept or decline all interlocutory appeals within 30 days of their submission; if the Environmental Appeals Board takes no action within that time, the appeal shall be automatically dismissed. When the Presiding Officer declines to certify an order or ruling to the Environmental Appeals Board for an interlocutory appeal, it may be reviewed by the Environmental Appeals Board only upon appeal from the initial decision of the Presiding Officer, except when the Environmental Appeals Board determines, upon motion of a party and in exceptional circumstances, that to delay review would not be in the public interest. Such motion shall be made within 5 days after receipt of notification that the Presiding Officer has refused to certify an order or ruling for interlocutory appeal to the Environmental Appeals Board. Ordinarily, the interlocutory appeal will be decided on the basis of the submissions made to the Presiding Officer. The Environmental Appeals Board may, however, allow briefs and oral argument.

(d) In exceptional circumstances, the Presiding Officer may stay the proceeding pending a decision by the Environmental Appeals Board upon an order or ruling certified by the Presiding Officer for an interlocutory appeal, or upon the denial of such certification by the Presiding Officer.

(e) The failure to request an interlocutory appeal shall not prevent taking exception to an order or ruling in an appeal under § 124.91.

[48 FR 14264, Apr. 1, 1983, as amended at 57 FR 5336, Feb. 13, 1992]

§ 124.91 Appeal to the Administrator.

(a)(1) Within 30 days after service of an initial decision, or a denial in whole or in part of a request for an evidentiary hearing, any party or requester, as the case may be, may appeal any matter set forth in the initial decision or denial, or any adverse order or ruling to which the party objected during the hearing, by filing with the Environmental Appeals Board notice of appeal and petition for review. The petition shall include a statement of the supporting reasons and, when appropriate, a showing that the initial decision contains:

(i) A finding of fact or conclusion of law which is clearly erroneous, or

(ii) An exercise of discretion or policy which is important and which the Environmental Appeals Board should review.

(2) Within 15 days after service of a petition for review under paragraph (c)(1) of this section, any other party to the proceeding may file a responsive petition.

(3) Policy decisions made or legal conclusions drawn in the course of denying a request for an evidentiary hearing may be reviewed and changed by the Environmental Appeals Board in an appeal under this section.

(b) Within 30 days of an initial decision or denial of a request for an evidentiary hearing, the Environmental Appeals Board may, *sua sponte,* review

such decision. Within 7 days after the Environmental Appeals Board has decided under this section to review an initial decision or the denial of a request for an evidentiary hearing, notice of that decision shall be served by mail upon all affected parties and the Regional Administrator.

(c)(1) Within a reasonable time following the filing of the petition for review, the Environmental Appeals Board shall issue an order either granting or denying the petition for review. When the Environmental Appeals Board grants a petition for review or determines under paragraph (b) of this section to review a decision, the Environmental Appeals Board may notify the parties that only certain issues shall be briefed.

(2) Upon granting a petition for review, the Regional Hearing Clerk shall promptly forward a copy of the record to the Environmental Appeals Board and shall retain a complete duplicate copy of the record in the Regional Office.

(d) Notwithstanding the grant of a petition for review or a determination under paragraph (b) of this section to review a decision, the Environmental Appeals Board may summarily affirm without opinion an initial decision or the denial of a request for an evidentiary hearing.

(e) A petition to the Environmental Appeals Board under paragraph (a) of this section for review of any initial decision or the denial of an evidentiary hearing is, under 5 U.S.C. 704, a prerequisite to the seeking of judicial review of the final decision of the Agency.

(f) If a party timely files a petition for review or if the Environmental Appeals Board *sua sponte* orders review, then, for purposes of judicial review, final Agency action on an issue occurs as follows:

(1) If the Environmental Appeals Board denies review or summarily affirms without opinion as provided in § 124.91(d), then the initial decision or denial becomes the final Agency action and occurs upon the service of notice of the Environmental Appeals Board's action.

(2) If the Environmental Appeals Board issues a decision without remanding the proceeding then the final permit, redrafted as required by the Environmental Appeals Board's original decision, shall be reissued and served upon all parties to the appeal.

(3) If the Environmental Appeals Board issues a decision remanding the proceeding, then final Agency action occurs upon completion of the remanded proceeding, inlcuding any appeals to the Environmental Appeals Board from the results of the remanded proceeding.

(g) The petitioner may file a brief in support of the petition within 21 days after the Environmental Appeals Board has granted a petition for review. Any other party may file a responsive brief within 21 days of service of the petitioner's brief. The petitioner then may file a reply brief within 14 days of service of the responsive brief. Any person may file an *amicus brief* for the consideration of the Environmental Appeals Board within the same time periods that govern reply briefs. If the Environmental Appeals Board determines, *sua sponte,* to review an initial Regional Administrator's decision or the denial of a request for an evidentiary hearing, the Environmental Appeals Board shall notify the parties of the schedule for filing briefs.

(h) Review by the Environmental Appeals Board of an initial decision or the denial of an evidentiary hearing shall be limited to the issues specified under paragraph (a) of this section, except that after notice to all the parties, the Environmental Appeals Board may raise and decide other matters which it considers material on the basis of the record.

(i) Motions to reconsider a final order shall be filed within ten (10) days after service of the final order. Every such motion must set forth the matters claimed to have been erroneously decided and the nature of the alleged errors. Motions for reconsideration under this provision shall be directed to, and decided by, the Environmental Appeals Board. Motions for reconsideration directed to the Administrator, rather than to the Environmental Appeals Board, will not be considered, except in cases that the Environmental Appeals Board has referred to the Administrator pursuant to § 124.72 and

in which the Administrator has issued the final order. A motion for reconsideration shall not stay the effective date of the final order unless specifically so ordered by the Environmental Appeals Board.

[48 FR 14264, Apr. 1, 1983, as amended at 57 FR 5336, Feb. 13, 1992]

Subpart F—Non-Adversary Panel Procedures

§ 124.111 Applicability.

(a) Except as set forth in this subpart, this subpart applies in lieu of, and to complete exclusion of, subparts A through E in the following cases:

(1)(i) In any proceedings for the issuance of any NPDES permit under CWA sections 402 and 405(f) which constitute ''initial licensing'' under the Administrative Procedure Act, when the Regional Administrator elects to apply this subpart and explicitly so states in the public notice of the draft permit under § 124.10 or in a supplemental notice under § 124.14. If an NPDES draft permit is processed under this subpart, any other draft permits which have been consolidated with the NPDES draft permit under § 124.4 shall likewise be processed under this subpart, except for PSD permits when the Regional Administrator makes a finding under § 124.4(e) that consolidation would be likely to result in missing the one year statutory deadline for issuing a final PSD permit under the CAA.

(ii) ''Initial licensing'' includes both the first decision on an NPDES permit applied for by a discharger that has not previously held one and the first decision on any variance requested by a discharger.

(iii) To the extent this subpart is used to process a request for a variance under CWA section 301(h), the term ''Administrator or a person designated by the Administrator'' shall be substituted for the term ''Regional Administrator''.

(2) In any proceeding for which a hearing under this subpart was granted under § 124.75 following a request for a formal hearing under § 124.74. See §§ 124.74(c)(8) and 124.75(a)(2).

(3) Whenever the Regional Administrator determines as a matter of discretion that the more formalized mechanisms of this subpart should be used to process draft NPDES general permits (for which evidentiary hearings are unavailable under § 124.71), or draft RCRA or draft UIC permits.

(b) EPA shall not apply these procedures to a decision on a variance where subpart E proceedings are simultaneously pending on the other conditions of the permit. See § 124.64(b).

[48 FR 14264, Apr. 1, 1983, as amended at 54 FR 18786, May 2, 1989]

§ 124.112 Relation to other subparts.

The following provisions of subparts A through E apply to proceedings under this subpart:

(a)(1) Sections 124.1 through 124.10.

(2) Section 124.14 ''Reopening of comment period.''

(3) Section 124.16 ''Stays of contested permit conditions.''

(4) Section 124.20 ''Computation of time.''

(b)(1) Section 124.41 ''Definitions applicable to PSD Permits.''

(2) Section 124.42 ''Additional procedures for PSD permits affecting Class I Areas.''

(c)(1) Sections 124.51 through 124.56.

(2) Section 124.57(c) ''Public notice.''

(3) Sections 124.58 through 124.66.

(d)(1) Section 124.72 ''Definitions,'' except for the definition of ''Presiding Officer,'' see section 124.119.

(2) Section 124.73 ''Filing.''

(3) Section 124.78 ''*Ex parte* communications.''

(4) Section 124.80 ''Filing and service.''

(5) Section 124.85(a) (Burden of proof).

(6) Section 124.86 ''Motions.''

(7) Section 124.87 ''Record of hearings.''

(8) Section 124.90 ''Interlocutory appeal.''

(e) In the case of permits to which this subpart is made applicable after a final permit has been issued under § 124.15, either by the grant under § 124.75 of a hearing request under § 124.74, or by notice of supplemental proceedings under § 124.14, §§ 124.13 and 124.76 shall also apply.

§ 124.113 Public notice of draft permits and public comment period.

Public notice of a draft permit under this subpart shall be given as provided in §§ 124.10 and 124.57. At the discretion of the Regional Administrator, the public comment period specified in this notice may include an opportunity for a public hearing under § 124.12.

§ 124.114 Request for hearing.

(a) By the close of the comment period under § 124.113, any person may request the Regional Administrator to hold a panel hearing on the draft permit by submitting a written request containing the following:

(1) A brief statement of the interest of the person requesting the hearing;

(2) A statement of any objections to the draft permit;

(3) A statement of the issues which such person proposes to raise for consideration at the hearing; and

(4) Statements meeting the requirements of § 124.74(c)(1)–(5).

(b) Whenever (1) a written request satisfying the requirements of paragraph (a) of this section has been received and presents genuine issues of material fact, or (2) the Regional Administrator determines *sua sponte* that a hearing under this subpart is necessary or appropriate, the Regional Administrator shall notify each person requesting the hearing and the applicant, and shall provide public notice under § 124.57(c). If the Regional Administrator determines that a request does not meet the requirements of paragraph (a) of this section or does not present genuine issues of fact, the Regional Administrator may deny the request for the hearing and shall serve written notice of that determination on all persons requesting the hearing.

(c) The Regional Administrator may also decide before a draft permit is prepared under § 124.6 that a hearing should be held under this section. In such cases, the public notice of the draft permit shall explicitly so state and shall contain the information required by § 124.57(c). This notice may also provide for a hearing under § 124.12 before a hearing is conducted under this section.

§ 124.115 Effect of denial of or absence of request for hearing.

If no request for a hearing is made under § 124.114, or if all such requests are denied under that section, the Regional Administrator shall then prepare a recommended decision under § 124.124. Any person whose hearing request has been denied may then appeal that recommended decision to the Environmental Appeals Board as provided in § 124.91.

[48 FR 14264, Apr. 1, 1983, as amended at 57 FR 5337, Feb. 13, 1992]

§ 124.116 Notice of hearing.

(a) Upon granting a request for a hearing under § 124.114 the Regional Administrator shall promptly publish a notice of the hearing as required under § 124.57(c). The mailed notice shall include a statement which indicates whether the Presiding Officer or the Regional Administrator will issue the Recommended decision. The mailed notice shall also allow the participants at least 30 days to submit written comments as provided under § 124.118.

(b) The Regional Administrator may also give notice of a hearing under this section at the same time as notice of a draft permit under § 124.113. In that case the comment periods under §§ 124.113 and 124.118 shall be merged and held as a single public comment period.

(c) The Regional Administrator may also give notice of hearing under this section in response to a hearing request under § 124.74 as provided in § 124.75.

§ 124.117 Request to participate in hearing.

(a) Persons desiring to participate in any hearing noticed under this section, shall file a request to participate with the Regional Hearing Clerk before the deadline set forth in the notice of the grant of the hearing. Any person filing such a request becomes a party to the proceedings within the meaning of the Administrative Procedure Act. The request shall include:

(1) A brief statement of the interest of the person in the proceeding;

(2) A brief outline of the points to be addressed;

(3) An estimate of the time required; and

(4) The requirements of § 124.74(c)(1)–(5).

(5) If the request is submitted by an organization, a nonbinding list of the persons to take part in the presentation.

(b) As soon as practicable, but in no event later than 2 weeks before the scheduled date of the hearing, the Presiding Officer shall make a hearing schedule available to the public and shall mail it to each person who requested to participate in the hearing.

§ 124.118 Submission of written comments on draft permit.

(a) No later than 30 days before the scheduled start of the hearing (or such other date as may be set forth in the notice of hearing), each party shall file all of its comments on the draft permit, based on information in the administrative record and any other information which is or reasonably could have been available to that party. All comments shall include any affidavits, studies, data, tests, or other materials relied upon for making any factual statements in the comments.

(b)(1) Written comments filed under paragraph (a) of this section shall constitute the bulk of the evidence submitted at the hearing. Oral statements at the hearing should be brief and in the nature of argument. They shall be restricted either to points that could not have been made in written comments, or to emphasize points which are made in the comments, but which the party believes can more effectively be argued in the hearing context.

(2) Notwithstanding the foregoing, within two weeks prior to the deadline specified in paragraph (a) of this section for the filing of comments, any party may move to submit all or part of its comments orally at the hearing in lieu of submitting written comments and the Presiding Officer shall, within one week, grant such motion if the Presiding Officer finds that the party will be prejudiced if required to submit the comments in written form.

(c) Parties to any hearing may submit written material in response to the comments filed by other parties under paragraph (a) of this section at the time they appear at the panel stage of the hearing under § 124.120.

§ 124.119 Presiding Officer.

(a)(1)(i) Before giving notice of a hearing under this subpart in a proceeding involving an NPDES permit, the Regional Administrator shall request that the Chief Administrative Law Judge assign an Administrative Law Judge as the Presiding Officer. The Chief Administrative Law Judge shall then make the assignment.

(ii) If all parties to such a hearing waive in writing their statutory right to have an Administrative Law Judge named as the Presiding Officer in a hearing subject to this subparagraph the Regional Administrator may name a Presiding Officer under paragraph (a)(2)(ii) of this section.

(2) Before giving notice of a hearing under this subpart in a proceeding which does not involve an NPDES permit or a RCRA permit termination, the Regional Administrator shall either:

(i) Request that the Chief Administrative Law Judge assign an Administrative Law Judge as the Presiding Officer. The Chief Administrative Law Judge may thereupon make such an assignment if he concludes that the other duties of his office allow, or

(ii) Name a lawyer permanently or temporarily employed by the Agency and without prior connection with the proceeding to serve as Presiding Officer;

(iii) If the Chief Administrative Law Judge declines to name an Administrative Law Judge as Presiding Officer upon receiving a request under paragraph (a)(2)(i) of this section, the Regional Administrator shall name a Presiding Officer under paragraph (a)(2)(ii) of this section.

(b) It shall be the duty of the Presiding Officer to conduct a fair and impartial hearing. The Presiding Officer shall have the authority:

(1) Conferred by § 124.85(b)(1)–(15), § 124.83 (b) and (c), and;

(2) To receive relevant evidence, provided that all comments under §§ 124.113 and 124.118, the record of the panel hearing under § 124.120, and the administrative record, as defined in § 124.9 or in § 124.18 as the case may be shall be received in evidence, and

(3) Either upon motion or *sua sponte*, to change the date of the hearing under § 124.120, or to recess such a hearing until a future date. In any such case the notice required by § 124.10 shall be given.

(c) Whenever a panel hearing will be held on an individual draft NPDES permit for a source which does not have an existing permit, the Presiding Officer, on motion by the source, may issue an order authorizing it to begin discharging if it complies with all conditions of the draft permit or such other conditions as may be imposed by the Presiding Officer in consultation with the panel. The motion shall be granted if no party opposes it, or if the source demonstrates that:

(1) It is likely to receive a permit to discharge at that site;

(2) The environment will not be irreparably harmed if the source is allowed to begin discharging in compliance with the conditions of the Presiding Officer's order pending final agency action; and

(3) Its discharge pending final agency action is in the public interest.

(d) If for any offshore or coastal mobile exploratory drilling rig or coastal mobile developmental drilling rig which has never received a finally effective permit to discharge at a ''site,'' but which is not a ''new discharger'' or ''new source,'' the Regional Administrator finds that compliance with certain permit conditions may be necessary to avoid irreparable environmental harm during the nonadversary panel procedures, he may specify in the statement of basis or fact sheet that those conditions, even if contested, shall remain enforceable obligations of the discharger during administrative review unless otherwise modified by the Presiding Officer under paragraph (c) of this section.

(Clean Water Act (33 U.S.C. 1251 *et seq.*), Safe Drinking Water Act (42 U.S.C. 300f *et seq.*), Clean Air Act (42 U.S.C. 7401 *et seq.*), Resource Conservation and Recovery Act (42 U.S.C. 6901 *et seq.*))

[48 FR 14264, Apr. 1, 1983, as amended at 48 FR 39620, Sept. 1, 1983]

§ 124.120 Panel hearing.

(a) A Presiding Officer shall preside at each hearing held under this subpart. An EPA panel shall also take part in the hearing. The panel shall consist of three or more EPA temporary or permanent employees having special expertise or responsibility in areas related to the hearing issue, none of whom shall have taken part in formulating the draft permit. If appropriate for the evaluation of new or different issues presented at the hearing, the panel membership, at the discretion of the Regional Administrator, may change or may include persons not employed by EPA.

(b) At the time of the hearing notice under § 124.116, the Regional Administrator shall designate the persons who shall serve as panel members for the hearing and the Regional Administrator shall file with the Regional Hearing Clerk the name and address of each person so designated. The Regional Administrator may also designate EPA employees who will provide staff support to the panel but who may or may not serve as panel members. The designated persons shall be subject to the *ex parte* rules in § 124.78. The Regional Administrator may also designate Agency trial staff as defined in § 124.78 for the hearing.

(c) At any time before the close of the hearing the Presiding Officer, after consultation with the panel, may request that any person having knowledge concerning the issues raised in the hearing and not then scheduled to participate therein appear and testify at the hearing.

(d) The panel members may question any person participating in the panel hearing. Cross-examination by persons other than panel members shall not be permitted at this stage of the proceeding except when the Presiding Officer determines, after consultation with the panel, that the cross-examination would expedite consideration of the issues. However, the parties may submit written questions to the Presiding Officer for the Presiding Officer to ask the participants, and the Presiding Officer may, after consultation with the panel, and at his or her sole discretion, ask these questions.

(e) At any time before the close of the hearing, any party may submit to the Presiding Officer written questions

specifically directed to any person appearing or testifying in the hearing. The Presiding Officer, after consultation with the panel may, at his sole discretion, ask the written question so submitted.

(f) Within 10 days after the close of the hearing, any party shall submit such additional written testimony, affidavits, information, or material as they consider relevant or which the panel may request. These additional submissions shall be filed with the Regional Hearing Clerk and shall be a part of the hearing record.

[48 FR 14264, Apr. 1, 1983, as amended at 49 FR 38052, Sept. 26, 1984]

§ 124.121 Opportunity for cross-examination.

(a) Any party to a panel hearing may submit a written request to cross-examine any issue of material fact. The motion shall be submitted to the Presiding Officer within 15 days after a full transcript of the panel hearing is filed with the Regional Hearing Clerk and shall specify:

(1) The disputed issue(s) of material fact. This shall include an explanation of why the questions at issue are factual, the extent to which they are in dispute in light of the then existing record, and the extent to which they are material to the decision on the application; and

(2) The person(s) to be cross-examined, and an estimate of the time necessary to conduct the cross-examination. This shall include a statement explaining how the cross-examination will resolve the disputed issues of material fact.

(b) After receipt of all motions for cross-examination under paragraph (a) of this section, the Presiding Officer, after consultation with the hearing panel, shall promptly issue an order either granting or denying each request. No cross-examination shall be allowed on questions of policy except to the extent required to disclose the factual basis for permit requirements, or on questions of law, or regarding matters (such as the validity of effluent limitations guidelines) that are not subject to challenge in permit issuance proceedings. Orders granting requests for cross-examination shall be served on all parties and shall specify:

(1) The issues on which cross-examination is granted;

(2) The persons to be cross-examined on each issue;

(3) The persons allowed to conduct cross-examination;

(4) Time limits for the examination of witnesses by each cross-examiner; and

(5) The date, time, and place of the supplementary hearing at which cross-examination shall take place.

(6) In issuing this order, the Presiding Officer may determine that two or more parties have the same or similar interests and that to prevent unduly repetitious cross-examination, they should be required to choose a single representative for purposes of cross-examination. In that case, the order shall simply assign time for cross-examination without further identifying the representative. If the designated parties fail to choose a single representative, the Presiding Officer may divide the assigned time among the representatives or issue any other order which justice may require.

(c) [Reserved]

(d) The Presiding Officer and, to the extent possible, the members of the hearing panel shall be present at the supplementary hearing. During the course of the hearing, the Presiding Officer shall have authority to modify any order issued under paragraph (b) of this section. A record will be made under § 124.87.

(e)(1) No later than the time set for requesting cross-examination, a party may request that alternative methods of clarifying the record (such as the submission of additional written information) be used in lieu of or in addition to cross-examination. The Presiding Officer shall issue an order granting or denying this request at the time he or she issues (or would have issued) an order granting or denying a request for cross-examination, under paragraph (b) of this section. If the request for an alternative method is granted, the order shall specify the alternative and any other relevant information (such as the due date for submitting written information).

(2) In passing on any request for cross-examination submitted under paragraph (a) of this section, the Presiding Officer may, as a precondition to ruling on the merits of the request, require alternative means of clarifying the record to be used whether or not a request to do so has been made. The party requesting cross-examination shall have one week to comment on the results of using the alternative method. After considering these comments the Presiding Officer shall issue an order granting or denying the request for cross-examination.

(f) The provisions of §§ 124.85(d)(2) and 124.84(e) apply to proceedings under this subpart.

[48 FR 14264, Apr. 1, 1983, as amended at 49 FR 38052, Sept. 26, 1984]

§ 124.122 Record for final permit.

The record on which the final permit shall be based in any proceeding under this subpart consists of:

(a) The administrative record compiled under § 124.9 or § 124.18 as the case may be;

(b) Any material submitted under § 124.78 relating to *ex parte* contacts;

(c) All notices issued under § 124.113;

(d) All requests for hearings, and rulings on those requests, received or issued under § 124.114;

(e) Any notice of hearing issued under § 124.116;

(f) Any request to participate in the hearing received under § 124.117;

(g) All comments submitted under § 124.118, any motions made under that section and the rulings on them, and any comments filed under § 124.113;

(h) The full transcript and other material received into the record of the panel hearing under § 124.120;

(i) Any motions for, or rulings on, cross-examination filed or issued under § 124.121;

(j) Any motions for, orders for, and the results of, any alternatives to cross-examination under § 124.121; and

(k) The full transcript of any cross-examination held.

§ 124.123 Filing of brief, proposed findings of fact and conclusions of law and proposed modified permit.

Unless otherwise ordered by the Presiding Officer, each party may, within 20 days after all requests for cross-examination are denied or after a transcript of the full hearing including any cross-examination becomes available, submit proposed findings of fact; conclusions regarding material issues of law, fact, or discretion; a proposed modified permit (if such person is urging that the draft or final permit be modified); and a brief in support thereof; together with references to relevant pages of transcript and to relevant exhibits. Within 10 days thereafter each party may file a reply brief concerning matters contained in opposing briefs and containing alternative findings of fact; conclusions regarding material issues of law, fact, or discretion; and a proposed modified permit where appropriate. Oral argument may be held at the discretion of the Presiding Officer on motion of any party or *sua sponte.*

§ 124.124 Recommended decision.

The person named to prepare the decision shall, as soon as practicable after the conclusion of the hearing, evaluate the record of the hearing and prepare and file a recommended decision with the Regional Hearing Clerk. That person may consult with, and receive assistance from, any member of the hearing panel in drafting the recommended decision, and may delegate the preparation of the recommended decision to the panel or to any member or members of it. This decision shall contain findings of fact, conclusions regarding all material issues of law, and a recommendation as to whether and in what respect the draft or final permit should be modified. After the recommended decision has been filed, the Regional Hearing Clerk shall serve a copy of that decision on each party and upon the Environmental Appeals Board.

[48 FR 14264, Apr. 1, 1983, as amended at 57 FR 5337, Feb. 13, 1992]

§ 124.125 Appeal from or review of recommended decision.

Within 30 days after service of the recommended decision, any party may take exception to any matter set forth in that decision or to any adverse order or ruling of the Presiding Officer to

which that party objected, and may appeal those exceptions to the Environmental Appeals Board as provided in §124.91, except that references to the *initial decision* will mean recommended decision under §124.124.

[57 FR 5337, Feb. 13, 1992]

§124.126 Final decision.

As soon as practicable after all appeal proceedings have been completed, the Environmental Appeals Board shall issue a final decision. The Environmental Appeals Board may consult with the Presiding Officer, members of the hearing panel, or any other EPA employee other than members of the Agency Trial Staff under §124.78 in preparing the final decision. The Hearing Clerk shall file a copy of the decision on all parties.

[57 FR 5337, Feb. 13, 1992]

§124.127 Final decision if there is no review.

If no party appeals a recommended decision to the Environmental Appeals Board, and if the Environmental Appeals Board does not elect to review it, the recommended decision becomes the final decision of the Agency upon the expiration of the time for filing any appeals.

[57 FR 5337, Feb. 13, 1992]

§124.128 Delegation of authority; time limitations.

(a) The Administrator delegates authority to the Environmental Appeals Board (which is described in §1.25 of this title) to issue final decisions in appeals filed under this subpart. An appeal directed to the Administrator, rather than to the Environmental Appeals Board, will not be considered. This delegation does not preclude the Environmental Appeals Board from referring an appeal or a motion filed under this subpart to the Administrator when the Environmental Appeals Board, in its discretion, deems it appropriate to do so. When an appeal or motion is referred to the Administrator by the Environmental Appeals Board, all parties shall be so notified and the rules in this subpart referring to the Environmental Appeals Board shall be interpreted as referring to the Administrator.

(b) The failure of the Environmental Appeals Board, the Regional Administrator, or the Presiding Officer to do any act within the time periods specified under this part shall not waive or diminish any right, power, or authority of the United States Environmental Protection Agency.

(c) Upon a showing by any party that it has been prejudiced by a failure of the Environmental Appeals Board, the Regional Administrator, or the Presiding Officer to do any act within the time periods specified under this part, the Environmental Appeals Board, the Regional Administrator, and the Presiding Officer, as the case may be, may grant that party such relief of a procedural nature (including extension of any time for compliance or other action) as may be appropriate.

[57 FR 5337, Feb. 13, 1992]

APPENDIX A TO PART 124—GUIDE TO DECISIONMAKING UNDER PART 124

This appendix is designed to assist in reading the procedural requirements set out in part 124. It consists of two flow charts.

Figure 1 diagrams the more conventional sequence of procedures EPA expects to follow in processing permits under this part. It outlines how a permit will be applied for, how a draft permit will be prepared and publicly noticed for comment, and how a final permit will be issued under the procedures in subpart A.

This permit may then be appealed to the Administrator, as specified both in subpart A (for RCRA, UIC, or PSD permits), or subpart E or F (for NPDES permits). The first flow chart also briefly outlines which permit decisions are eligible for which types of appeal.

Part 124 also contains special ''non-adversary panel hearing'' procedures based on the ''initial licensing'' provisions of the Administrative Procedure Act. These procedures are set forth in subpart F. In some cases, EPA may only decide to make those procedures applicable after it has gone through the normal subpart A procedures on a draft permit. This process is also diagrammed in Figure 1.

Figure 2 sets forth the general procedure to be followed where these subpart F procedures have been made applicable to a permit from the beginning.

Both flow charts outline a sequence of events directed by arrows. The boxes set forth elements of the permit process; and the

diamonds indicate key decisionmaking points in the permit process.

The charts are discussed in more detail below.

Figure 1—Conventional EPA Permitting Procedures

This chart outlines the procedures for issuing permits whenever EPA does not make use of the special ''panel hearing'' procedures in subpart F. The major steps depicted on this chart are as follows:

1. The permit process can begin in any one of the following ways:

a. Normally, the process will begin when a person applies for a permit under §§122.21 (NPDES), 144.31 (UIC), 233.4 (404), and 270.10 (RCRA) and 124.3.

b. In other cases, EPA may decide to take action on its own initiative to change a permit or to issue a general permit. This leads directly to preparation of a draft permit under §124.6.

c. In addition, the permittee or any interested person (other than for PSD permits) may request modification, revocation and reissuance or termination of a permit under §§122.62, 122.64 (NPDES), 144.39, 144.40 (UIC), 233.14, 233.15, (404), 270.41, 270.43 (RCRA), and 124.5.

Those requests can be handled in either of two ways:

i. EPA may tentatively decide to grant the request and issue a new draft permit for public comment, either with or without requiring a new application.

ii. If the request is denied, an informal appeal to the Environmental Appeals Board is available.

2. The next major step in the permit process is the preparation of a draft permit. As the chart indicates, preparing a draft permit also requires preparation of either a statement of basis (§124.7), a fact sheet (§124.5) or, compilation of an ''administrative record'' (§124.9), and public notice (§124.10).

3. The next stage is the public comment period (§124.11). A public hearing under §124.12 may be requested before the close of the public comment period.

EPA has the discretion to hold a public hearing, even if there were no requests during the public comment period. If EPA decides to schedule one, the public comment period will be extended through the close of the hearing. EPA also has the discretion to conduct the public hearing under subpart F panel procedures. (See Figure 2.)

The regulations provide that all arguments and factual materials that a person wishes EPA to consider in connection with a particular permit must be placed in the record by the close of the public comment period (§124.13).

4. Section 124.14 states that EPA, at any time before issuing a final permit decision may decide to either reopen or extend the comment period, prepare a new draft permit and begin the process again from that point, or for RCRA and UIC permits, or for NPDES permits that constitute ''initial licensing'', to begin ''panel hearing'' proceedings under subpart F. These various results are shown schematically.

5. The public comment period and any public hearing will be followed by issuance of a final permit decision (§124.15). As the chart shows, the final permit must be accompanied by a response to comments (§124.17) and be based on the administrative record (§124.18).

6. After the final permit is issued, it may be appealed to higher agency authority. The exact form of the appeal depends on the type of permit involved.

a. RCRA, UIC, or PSD permits standing alone will be appealed directly to the Environmental Appeals Board under §124.9.

b. NPDES permits which do not involve ''initial licensing'' may be appealed in an evidentiary hearing under subpart E. The regulations provide (§124.74) that if such a hearing is granted for an NPDES permit and if RCRA or UIC permits have been consolidated with that permit under §124.4 then closely related conditions of those RCRA or UIC permits may be reexamined in an evidentiary hearing. PSD permits, however, may never be reexamined in a subpart E hearing.

c. NPDES permits which do involve ''initial licensing'' may be appealed in a panel hearing under subpart F. The regulations provide that if such a hearing is granted for an NPDES permit, consolidated RCRA, UIC, or PSD permits may also be reexamined in the same proceeding.

As discussed below, this is only one of several ways the panel hearing procedures may be used under these regulations.

7. This chart does not show EPA appeal procedures in detail. Procedures for appeal to the Environmental Appeals Board under §124.19 are self-explanatory; subpart F procedures are diagrammed in Figure 2; and subpart E procedures are basically the same that would apply in any evidentiary hearing.

However, the chart at this stage does reflect the provisions of §124.60(b), which allows EPA, even after a formal hearing has begun, to ''recycle'' a permit back to the draft permit stage at any time before that hearing has resulted in an initial decision.

Figure 2—Non-Adversary Panel Procedures

This chart outlines the procedures for processing permits under the special ''panel hearing'' procedures of subpart F. These procedures were designed for making decisions that involve ''initial licensing'' NPDES permits. Those permits include the first decisions on an NPDES permit applied for by any discharger that has not previously held one, and the first decision on any statutory variance. In addition, these procedures will be

used for any RCRA, UIC, or PSD permit which has been consolidated with such an NPDES permit, and may be used, if the Regional Administrator so chooses, for the issuance of individual RCRA or UIC permits. The steps depicted on this chart are as follows:

1. *Application for a permit.* These proceedings will generally begin with an application, since NPDES initial licensing always will begin with an application.

2. *Preparation of a draft permit.* This is identical to the similar step in Figure 1.

3. *Public comment period.* This again is identical to the similar step in Figure 1. The Regional Administrator has the opportunity to schedule an informal public hearing under §124.12 during this period.

4. Requests for a panel hearing must be received by the end of the public comment period under §124.113. The recommended decision may then be appealed to the Environmental Appeals Board. See §124.115.

If a hearing request is denied, or if no hearing requests are received, a recommended decision will be issued based on the comments received. The recommended decision may then be appealed to the Administrator. See §124.115.

5. If a hearing is granted, notice of the hearing will be published in accordance with §124.116 and will be followed by a second comment period during which requests to participate and the bulk of the remaining evidence for the final decision will be received (§§124.117 and 124.118).

The regulations also allow EPA to move directly to this stage by scheduling a hearing when the draft permit is prepared. In such cases the comment period on the draft permit under §124.113 and the prehearing comment period under §124.118 would occur at the same time. EPA anticipates that this will be the more frequent practice when permits are processed under panel procedures.

This is also a stage at which EPA can switch from the conventional procedures diagramed in Figure 1 to the panel hearing procedures. As the chart indicates, EPA would do this by scheduling a panel hearing either through use of the ''recycle'' provision in §124.14 or in response to a request for a formal hearing under §124.74.

6. After the close of the comment period, a panel hearing will be held under §124.120, followed by any cross-examination granted under §124.121. The recommended decision will then be prepared (§124.124) and an opportunity for appeal provided under §124.125. A final decision will be issued after appeal proceedings, if any, are concluded.

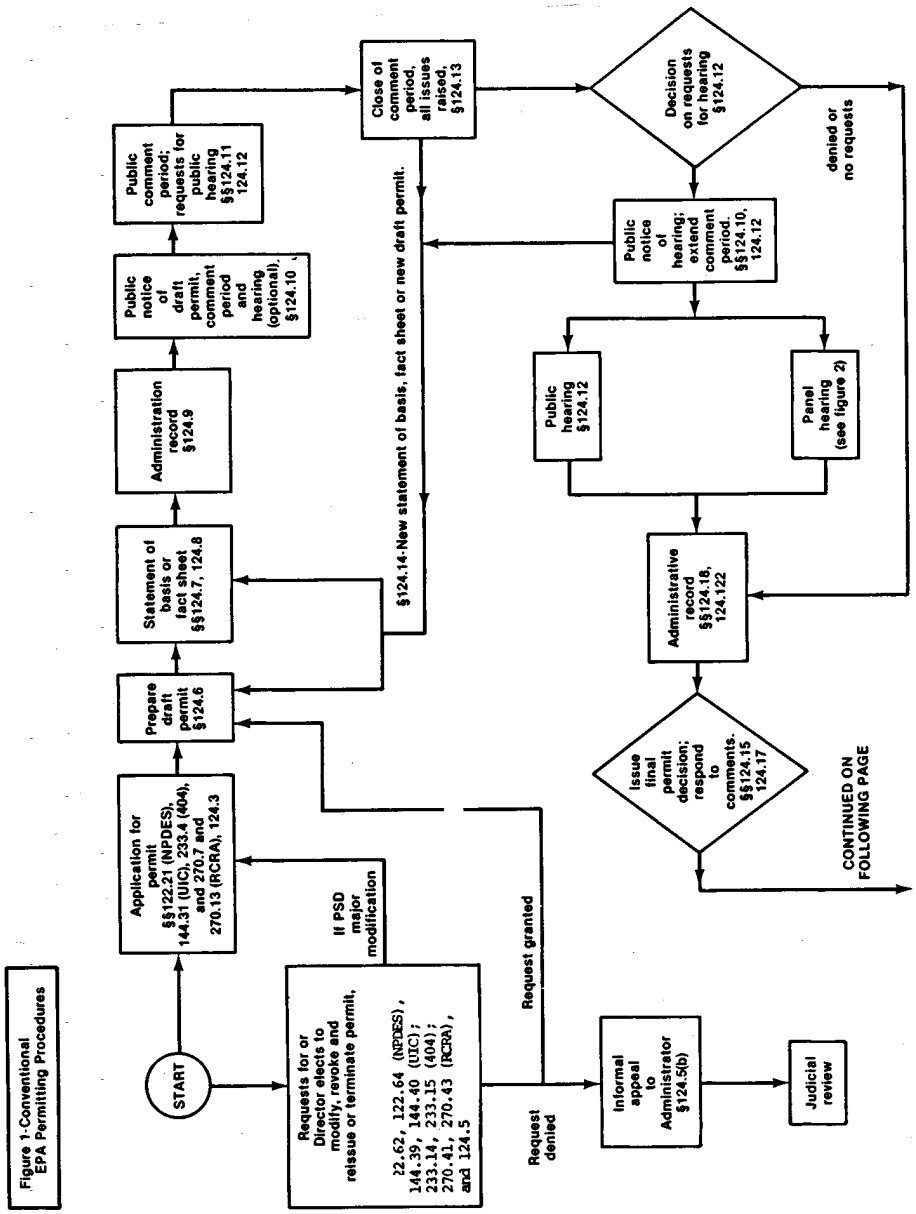

Figure 1-Conventional EPA Permitting Procedures

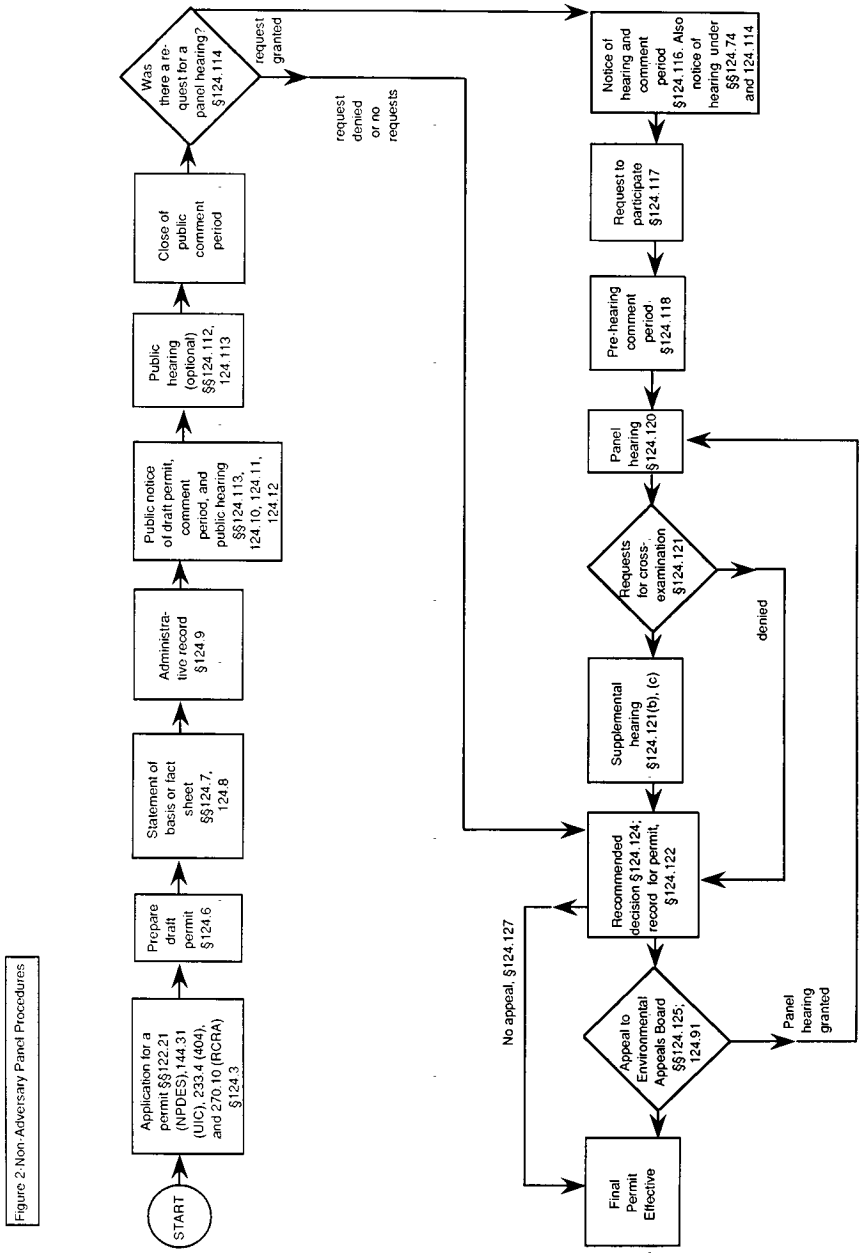

Figure 2-Non Adversary Panel Procedures

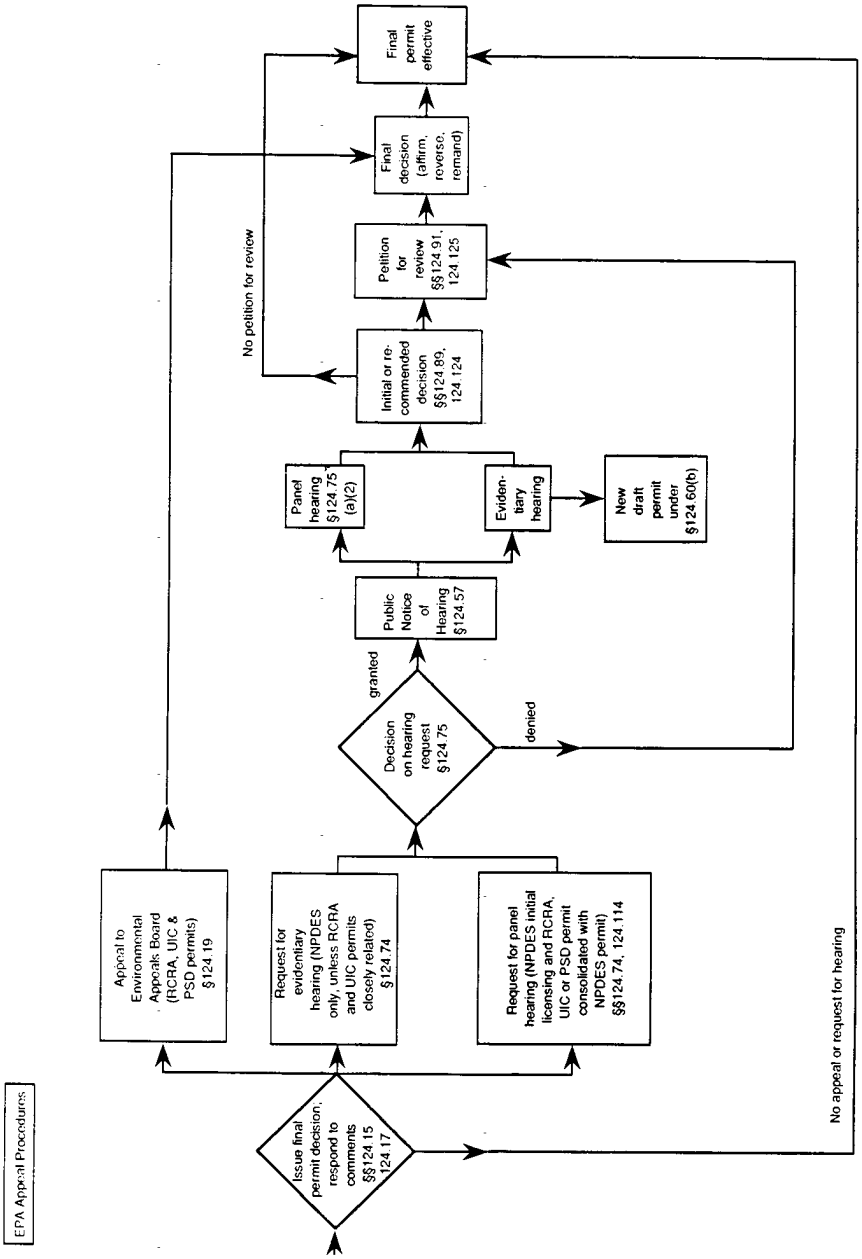

[48 FR 14264, Apr. 1, 1983, as amended at 57 FR 5337, 5338, Feb. 13, 1992]

PART 125—CRITERIA AND STANDARDS FOR THE NATIONAL POLLUTANT DISCHARGE ELIMINATION SYSTEM

Subpart A—Criteria and Standards for Imposing Technology-Based Treatment Requirements Under Sections 301(b) and 402 of the Act

Sec.
125.1 Purpose and scope.
125.2 Definitions.
125.3 Technology-based treatment requirements in permits.

Subpart B—Criteria for Issuance of Permits to Aquaculture Projects

125.10 Purpose and scope.
125.11 Criteria.

Subpart C [Reserved]

Subpart D—Criteria and Standards for Determining Fundamentally Different Factors Under Sections 301(b)(1)(A), 301(b)(2) (A) and (E) of the Act

125.30 Purpose and scope.
125.31 Criteria.
125.32 Method of application.

Subpart E—Criteria for Granting Economic Variances From Best Available Technology Economically Achievable Under Section 301(c) of the Act—[Reserved]

Subpart F—Criteria for Granting Water Quality Related Variances Under Section 301(g) of the Act—[Reserved]

Subpart G—Criteria for Modifying the Secondary Treatment Requirements Under Section 301(h) of the Clean Water Act

125.56 Scope and purpose.
125.57 Law governing issuance of a section 301(h) modified permit.
125.58 Definitions.
125.59 General.
125.60 Primary or equivalent treatment requirements.
125.61 Existence of and compliance with applicable water quality standards.
125.62 Attainment or maintenance of water quality which assures protection of public water supplies; assures the protection and propagation of a balanced, indigenous population of shellfish, fish, and wildlife; and allows recreational activities.
125.63 Establishment of a monitoring program.
125.64 Effect of the discharge on other point and nonpoint sources.
125.65 Urban area pretreatment program.
125.66 Toxics control program.
125.67 Increase in effluent volume or amount of pollutants discharged.
125.68 Special conditions for section 301(h) modified permits.

APPENDIX TO PART 125 TO SUBPART G—APPLICANT QUESTIONNAIRE FOR MODIFICATION OF SECONDARY TREATMENT REQUIREMENTS

Subpart H—Criteria for Determining Alternative Effluent Limitations Under Section 316(a) of the Act

125.70 Purpose and scope.
125.71 Definitions.
125.72 Early screening of applications for section 316(a) variances.
125.73 Criteria and standards for the determination of alternative effluent limitations under section 316(a).

Subpart I—Criteria Applicable To Cooling Water Intake Structures Under Section 316(b) of the Act—[Reserved]

Subpart J [Reserved]

Subpart K—Criteria and Standards for Best Management Practices Authorized Under Section 304(e) of the Act

125.100 Purpose and scope.
125.101 Definition.
125.102 Applicability of best management practices.
125.103 Permit terms and conditions.
125.104 Best management practices programs.

Subpart L—Criteria and Standards for Imposing Conditions for the Disposal of Sewage Sludge Under Section 405 of the Act—[Reserved]

Subpart M—Ocean Discharge Criteria

125.120 Scope and purpose.
125.121 Definitions.
125.122 Determination of unreasonable degradation of the marine environment.
125.123 Permit requirements.
125.124 Information required to be submitted by applicant.

AUTHORITY: Clean Water Act, as amended by the Clean Water Act of 1977, 33 U.S.C. 1251 *et seq.*, unless otherwise noted.

SOURCE: 44 FR 32948, June 7, 1979, unless otherwise noted.

Subpart A—Criteria and Standards for Imposing Technology-Based Treatment Requirements Under Sections 301(b) and 402 of the Act

§ 125.1 Purpose and scope.

This subpart establishes criteria and standards for the imposition of technology-based treatment requirements in permits under section 301(b) of the Act, including the application of EPA promulgated effluent limitations and case-by-case determinations of effluent limitations under section 402(a)(1) of the Act.

§ 125.2 Definitions.

For the purposes of this part, any reference to *the Act* shall mean the Clean Water Act of 1977 (CWA). Unless otherwise noted, the definitions in parts 122, 123 and 124 apply to this part.

[45 FR 33512, May 19, 1980]

§ 125.3 Technology-based treatment requirements in permits.

(a) *General.* Technology-based treatment requirements under section 301(b) of the Act represent the minimum level of control that must be imposed in a permit issued under section 402 of the Act. (See §§ 122.41, 122.42 and 122.44 for a discussion of additional or more stringent effluent limitations and conditions.) Permits shall contain the following technology-based treatment requirements in accordance with the following statutory deadlines;

(1) For POTW's, effluent limitations based upon:

(i) Secondary treatment—from date of permit issuance; and

(ii) The best practicable waste treatment technology—not later than July 1, 1983; and

(2) For dischargers other than POTWs except as provided in § 122.29(d), effluent limitations requiring:

(i) The best practicable control technology currently available (BPT)—

(A) For effluent limitations promulgated under Section 304(b) after January 1, 1982 and requiring a level of control substantially greater or based on fundamentally different control technology than under permits for an industrial category issued before such date, compliance as expeditiously as practicable but in no case later than three years after the date such limitations are promulgated under section 304(b) and in no case later than March 31, 1989;

(B) For effluent limitations established on a case-by-case basis based on Best Professional Judgment (BPJ) under Section 402(a)(1)(B) of the Act in a permit issued after February 4, 1987, compliance as expeditiously as practicable but in no case later than three years after the date such limitations are established and in no case later than March 31, 1989;

(C) For all other BPT effluent limitations compliance is required from the date of permit issuance.

(ii) For conventional pollutants, the best conventional pollutant control technology (BCT)—

(A) For effluent limitations promulgated under section 304(b), as expeditiously as practicable but in no case later than three years after the date such limitations are promulgated under section 304(b), and in no case later than March 31, 1989.

(B) For effluent limitations established on a case-by-case (BPJ) basis under section 402(a)(1)(B) of the Act in a permit issued after February 4, 1987, compliance as expeditiously as practicable but in no case later than three years after the date such limitations are established and in no case later than March 31, 1989;

(iii) For all toxic pollutants referred to in Committee Print No. 95–30, House Committee on Public Works and Transportation, the best available technology economically achievable (BAT)—

(A) For effluent limitations established under section 304(b), as expeditiously as practicable but in no case later than three years after the date such limitations are promulgated under section 304(b), and in no case later than March 31, 1989.

(B) For permits issued on a case-by-case (BPJ) basis under section 402(a)(1)(B) of the Act after February 4, 1987 establishing BAT effluent limitations, compliance is required as expeditiously as practicable but in no case later than three years after the

date such limitations are promulgated under section 304(b), and in no case later than March 31, 1989.

(iv) For all toxic pollutants other than those listed in Committee Print No. 95–30, effluent limitations based on BAT—

(A) For effluent limitations promulgated under section 304(b) compliance is required as expeditiously as practicable, but in no case later than three years after the date such limitations are promulgated under section 304(b) and in no case later than March 31, 1989.

(B) For permits issued on a case-by-case (BPJ) basis under Section 402(a)(1)(B) of the Act after February 4, 1987 establishing BAT effluent limitations, compliance is required as expeditiously as practicable but in no case later than 3 years after the date such limitations are established and in no case later than March 31, 1989.

(v) For all pollutants which are neither toxic nor conventional pollutants, effluent limitations based on BAT—

(A) For effluent limitations promulgated under section 304(b), compliance is required as expeditiously as practicable but in no case later than 3 years after the date such limitations are established and in no case later than March 31, 1989.

(B) For permits issued on a case-by-case (BPJ) basis under section 402(a)(1)(B) of the Act after February 4, 1987 establishing BAT effluent limitations compliance is required as expeditiously as practicable but in no case later than three years after the date such limitations are established and in no case later than March 31, 1989.

(b) *Statutory variances and extensions.* (1) The following variances from technology-based treatment requirements are authorized by the Act and may be applied for under § 122.21;

(i) For POTW's, a section 301(h) marine discharge variance from secondary treatment (subpart G);

(ii) For dischargers other than POTW's;

(A) A section 301(c) economic variance from BAT (subpart E);

(B) A section 301(g) water quality related variance from BAT (subpart F); and

(C) A section 316(a) thermal variance from BPT, BCT and BAT (subpart H).

(2) The following extensions of deadlines for compliance with technology-based treatment requirements are authorized by the Act and may be applied for under § 124.53:

(i) For POTW's a section 301(i) extension of the secondary treatment deadline (subpart J);

(ii) For dischargers other than POTW's:

(A) A section 301(i) extension of the BPT deadline (subpart J); and

(B) A section 301(k) extension of the BAT deadline (subpart C).

(c) *Methods of imposing technology-based treatment requirements in permits.* Technology-based treatment requirements may be imposed through one of the following three methods:

(1) Application of EPA-promulgated effluent limitations developed under section 304 of the Act to dischargers by category or subcategory. These effluent limitations are not applicable to the extent that they have been remanded or withdrawn. However, in the case of a court remand, determinations underlying effluent limitations shall be binding in permit issuance proceedings where those determinations are not required to be reexamined by a court remanding the regulations. In addition, dischargers may seek fundamentally different factors variances from these effluent limitations under § 122.21 and subpart D of this part.

(2) On a case-by-case basis under section 402(a)(1) of the Act, to the extent that EPA-promulgated effluent limitations are inapplicable. The permit writer shall apply the appropriate factors listed in § 125.3(d) and shall consider:

(i) The appropriate technology for the category or class of point sources of which the applicant is a member, based upon all available information; and

(ii) Any unique factors relating to the applicant.

[*Comment:* These factors must be considered in all cases, regardless of whether the permit is being issued by EPA or an approved State.]

(3) Through a combination of the methods in paragraphs (d) (1) and (2) of

this section. Where promulgated effluent limitations guidelines only apply to certain aspects of the discharger's operation, or to certain pollutants, other aspects or activities are subject to regulation on a case-by-case basis in order to carry out the provisions of the Act.

(4) Limitations developed under paragraph (d)(2) of this section may be expressed, where appropriate, in terms of toxicity (e.g., ''the LC_{50} for fat head minnow of the effluent from outfall 001 shall be greater than 25%''). *Provided*, That is shown that the limits reflect the appropriate requirements (for example, technology-based or water-quality-based standards) of the Act.

(d) In setting case-by-case limitations pursuant to §125.3(c), the permit writer must consider the following factors:

(1) *For BPT requirements:* (i) The total cost of application of technology in relation to the effluent reduction benefits to be achieved from such application;

(ii) The age of equipment and facilities involved;

(iii) The process employed;

(iv) The engineering aspects of the application of various types of control techniques;

(v) Process changes; and

(vi) Non-water quality environmental impact (including energy requirements).

(2) *For BCT requirements:* (i) The reasonableness of the relationship between the costs of attaining a reduction in effluent and the effluent reduction benefits derived;

(ii) The comparison of the cost and level of reduction of such pollutants from the discharge from publicly owned treatment works to the cost and level of reduction of such pollutants from a class or category of industrial sources;

(iii) The age of equipment and facilities involved;

(iv) The process employed;

(v) The engineering aspects of the application of various types of control techniques;

(vi) Process changes; and

(vii) Non-water quality environmental impact (including energy requirements).

(3) *For BAT requirements:* (i) The age of equipment and facilities involved;

(ii) The process employed;

(iii) The engineering aspects of the application of various types of control techniques;

(iv) Process changes;

(v) The cost of achieving such effluent reduction; and

(vi) Non-water quality environmental impact (including energy requirements).

(e) Technology-based treatment requirements are applied prior to or at the point of discharge.

(f) Technology-based treatment requirements cannot be satisfied through the use of ''non-treatment'' techniques such as flow augmentation and instream mechanical aerators. However, these techniques may be considered as a method of achieving water quality standards on a case-by-case basis when:

(1) The technology-based treatment requirements applicable to the discharge are not sufficient to achieve the standards;

(2) The discharger agrees to waive any opportunity to request a variance under section 301 (c), (g) or (h) of the Act; and

(3) The discharger demonstrates that such a technique is the preferred environmental and economic method to achieve the standards after consideration of alternatives such as advanced waste treatment, recycle and reuse, land disposal, changes in operating methods, and other available methods.

(g) Technology-based effluent limitations shall be established under this subpart for solids, sludges, filter backwash, and other pollutants removed in the course of treatment or control of wastewaters in the same manner as for other pollutants.

(h)(1) The Director may set a permit limit for a conventional pollutant at a level more stringent than the best conventional pollution control technology (BCT), or a limit for a nonconventional pollutant which shall not be subject to modification under section 301 (c) or (g) of the Act where:

(i) Effluent limitations guidelines specify the pollutant as an indicator for a toxic pollutant, or

(ii)(A) The limitation reflects BAT-level control of discharges of one or

more toxic pollutants which are present in the waste stream, and a specific BAT limitation upon the toxic pollutant(s) is not feasible for economic or technical reasons;

(B) The permit identifies which toxic pollutants are intended to be controlled by use of the limitation; and

(C) The fact sheet required by §124.56 sets forth the basis for the limitation, including a finding that compliance with the limitation will result in BAT-level control of the toxic pollutant discharges identified in paragraph (h)(1)(ii)(B) of this section, and a finding that it would be economically or technically infeasible to directly limit the toxic pollutant(s).

(2) The Director may set a permit limit for a conventional pollutant at a level more stringent than BCT when:

(i) Effluent limitations guidelines specify the pollutant as an indicator for a hazardous substance, or

(ii)(A) The limitation reflects BAT-level control of discharges (or an appropriate level determined under section 301(c) or (g) of the Act) of one or more hazardous substance(s) which are present in the waste stream, and a specific BAT (or other appropriate) limitation upon the hazardous substance(s) is not feasible for economic or technical reasons;

(B) The permit identifies which hazardous substances are intended to be controlled by use of the limitation; and

(C) The fact sheet required by §124.56 sets forth the basis for the limitation, including a finding that compliance with the limitations will result in BAT-level (or other appropriate level) control of the hazardous substances discharges identified in paragraph (h)(2)(ii)(B) of this section, and a finding that it would be economically or technically infeasible to directly limit the hazardous substance(s).

(iii) Hazardous substances which are also toxic pollutants are subject to paragraph (h)(1) of this section.

(3) The Director may not set a more stringent limit under the preceding paragraphs if the method of treatment required to comply with the limit differs from that which would be required if the toxic pollutant(s) or hazardous substance(s) controlled by the limit were limited directly.

(4) Toxic pollutants identified under paragraph (h)(1) of this section remain subject to the requirements of §122.42(a)(1) (notification of increased discharges of toxic pollutants above levels reported in the application form).

(Clean Water Act, Safe Drinking Water Act, Clean Air Act, Resource Conservation and Recovery Act: 42 U.S.C. 6905, 6912, 6925, 6927, 6974)

[44 FR 32948, June 7, 1979, as amended at 45 FR 33512, May 19, 1980; 48 FR 14293, Apr. 1, 1983; 49 FR 38052, Sept. 26, 1984; 50 FR 6941, Feb. 19, 1985; 54 FR 257, Jan. 4, 1989]

Subpart B—Criteria for Issuance of Permits to Aquaculture Projects

§125.10 Purpose and scope.

(a) These regulations establish guidelines under sections 318 and 402 of the Act for approval of any discharge of pollutants associated with an aquaculture project.

(b) The regulations authorize, on a selective basis, controlled discharges which would otherwise be unlawful under the Act in order to determine the feasibility of using pollutants to grow aquatic organisms which can be harvested and used beneficially. EPA policy is to encourage such projects, while at the same time protecting other beneficial uses of the waters.

(c) Permits issued for discharges into aquaculture projects under this subpart are NPDES permits and are subject to the applicable requirements of parts 122, 123 and 124. Any permit shall include such conditions (including monitoring and reporting requirements) as are necessary to comply with those parts. Technology-based effluent limitations need not be applied to discharges into the approved project except with respect to toxic pollutants.

§125.11 Criteria.

(a) No NPDES permit shall be issued to an aquaculture project unless:

(1) The Director determines that the aquaculture project:

(i) Is intended by the project operator to produce a crop which has significant direct or indirect commercial value (or is intended to be operated for research

into possible production of such a crop); and

(ii) Does not occupy a designated project area which is larger than can be economically operated for the crop under cultivation or than is necessary for research purposes.

(2) The applicant has demonstrated, to the satisfaction of the Director, that the use of the pollutant to be discharged to the aquaculture project will result in an increased harvest of organisms under culture over what would naturally occur in the area;

(3) The applicant has demonstrated, to the satisfaction of the Director, that if the species to be cultivated in the aquaculture project is not indigenous to the immediate geographical area, there will be minimal adverse effects on the flora and fauna indigenous to the area, and the total commercial value of the introduced species is at least equal to that of the displaced or affected indigenous flora and fauna;

(4) The Director determines that the crop will not have a significant potential for human health hazards resulting from its consumption;

(5) The Director determines that migration of pollutants from the designated project area to water outside of the aquaculture project will not cause or contribute to a violation of water quality standards or a violation of the applicable standards and limitations applicable to the supplier of the pollutant that would govern if the aquaculture project were itself a point source. The approval of an aquaculture project shall not result in the enlargement of a pre-existing mixing zone area beyond what had been designated by the State for the original discharge.

(b) No permit shall be issued for any aquaculture project in conflict with a plan or an amendment to a plan approved under section 208(b) of the Act.

(c) No permit shall be issued for any aquaculture project located in the territorial sea, the waters of the contiguous zone, or the oceans, except in conformity with guidelines issued under section 403(c) of the Act.

(d) Designated project areas shall not include a portion of a body of water large enough to expose a substantial portion of the indigenous biota to the conditions within the designated project area. For example, the designated project area shall not include the entire width of a watercourse, since all organisms indigenous to that watercourse might be subjected to discharges of pollutants that would, except for the provisions of section 318 of the Act, violate section 301 of the Act.

(e) Any modifications caused by the construction or creation of a reef, barrier or containment structure shall not unduly alter the tidal regimen of an estuary or interfere with migrations of unconfined aquatic species.

[*Comment:* Any modifications described in this paragraph which result in the discharge of dredged or fill material into navigable waters may be subject to the permit requirements of section 404 of the Act.]

(f) Any pollutants not required by or beneficial to the aquaculture crop shall not exceed applicable standards and limitations when entering the designated project area.

Subpart C [Reserved]

Subpart D—Criteria and Standards for Determining Fundamentally Different Factors Under Sections 301(b)(1)(A), 301(b)(2) (A) and (E) of the Act

§ 125.30 Purpose and scope.

(a) This subpart establishes the criteria and standards to be used in determining whether effluent limitations alternative to those required by promulgated EPA effluent limitations guidelines under sections 301 and 304 of the Act (hereinafter referred to as ''national limits'') should be imposed on a discharger because factors relating to the discharger's facilities, equipment, processes or other factors related to the discharger are fundamentally different from the factors considered by EPA in development of the national limits. This subpart applies to all national limitations promulgated under sections 301 and 304 of the Act, except for the BPT limits contained in 40 CFR 423.12 (steam electric generating point source category).

(b) In establishing national limits, EPA takes into account all the information it can collect, develop and solicit regarding the factors listed in sections 304(b) and 304(g) of the Act. In some cases, however, data which could affect these national limits as they apply to a particular discharge may not be available or may not be considered during their development. As a result, it may be necessary on a case-by-case basis to adjust the national limits, and make them either more or less stringent as they apply to certain dischargers within an industrial category or subcategory. This will only be done if data specific to that discharger indicates it presents factors fundamentally different from those considered by EPA in developing the limit at issue. Any interested person believing that factors relating to a discharger's facilities, equipment, processes or other facilities related to the discharger are fundamentally different from the factors considered during development of the national limits may request a fundamentally different factors variance under § 122.21(l)(1). In addition, such a variance may be proposed by the Director in the draft permit.

(Secs. 301, 304, 306, 307, 308, and 501 of the Clean Water Act (the Federal Water Pollution Control Act Amendments of 1972, Pub. L. 92–500 as amended by the Clean Water Act of 1977, Pub. L. 95–217 (the ''Act''); Clean Water Act, Safe Drinking Water Act, Clean Air Act, Resource Conservation and Recovery Act: 42 U.S.C. 6905, 6912, 6925, 6927, 6974)

[44 FR 32948, June 7, 1979, as amended at 45 FR 33512, May 19, 1980; 46 FR 9460, Jan. 28, 1981; 47 FR 52309, Nov. 19, 1982; 48 FR 14293, Apr. 1, 1983]

§ 125.31 Criteria.

(a) A request for the establishment of effluent limitations under this subpart (fundamentally different factors variance) shall be approved only if:

(1) There is an applicable national limit which is applied in the permit and specifically controls the pollutant for which alternative effluent limitations or standards have been requested; and

(2) Factors relating to the discharge controlled by the permit are fundamentally different from those considered by EPA in establishing the national limits; and

(3) The request for alternative effluent limitations or standards is made in accordance with the procedural requirements of part 124.

(b) A request for the establishment of effluent limitations less stringent than those required by national limits guidelines shall be approved only if:

(1) The alternative effluent limitation or standard requested is no less stringent than justified by the fundamental difference; and

(2) The alternative effluent limitation or standard will ensure compliance with sections 208(e) and 301(b)(1)(C) of the Act; and

(3) Compliance with the national limits (either by using the technologies upon which the national limits are based or by other control alternatives) would result in:

(i) A removal cost wholly out of proportion to the removal cost considered during development of the national limits; or

(ii) A non-water quality environmental impact (including energy requirements) fundamentally more adverse than the impact considered during development of the national limits.

(c) A request for alternative limits more stringent than required by national limits shall be approved only if:

(1) The alternative effluent limitation or standard requested is no more stringent than justified by the fundamental difference; and

(2) Compliance with the alternative effluent limitation or standard would not result in:

(i) A removal cost wholly out of proportion to the removal cost considered during development of the national limits; or

(ii) A non-water quality environmental impact (including energy requirements) fundamentally more adverse than the impact considered during development of the national limits.

(d) Factors which may be considered fundamentally different are:

(1) The nature or quality of pollutants contained in the raw waste load of the applicant's process wastewater;

[*Comment:* (1) In determining whether factors concerning the discharger are fundamentally different, EPA will consider, where relevant, the applicable development document for the national limits, associated technical and economic data collected for use in developing each respective national limit, records of legal proceedings, and written and printed documentation including records of communication, etc., relevant to the development of respective national limits which are kept on public file by EPA.

(2) Waste stream(s) associated with a discharger's process wastewater which were not considered in the development of the national limits will not ordinarily be treated as fundamentally different under paragraph (a) of this section. Instead, national limits should be applied to the other streams, and the unique stream(s) should be subject to limitations based on section 402(a)(1) of the Act. See § 125.2(c)(2).]

(2) The volume of the discharger's process wastewater and effluent discharged;

(3) Non-water quality environmental impact of control and treatment of the discharger's raw waste load;

(4) Energy requirements of the application of control and treatment technology;

(5) Age, size, land availability, and configuration as they relate to the discharger's equipment or facilities; processes employed; process changes; and engineering aspects of the application of control technology;

(6) Cost of compliance with required control technololgy.

(e) A variance request or portion of such a request under this section shall not be granted on any of the following grounds:

(1) The infeasibility of installing the required waste treatment equipment within the time the Act allows.

[*Comment:* Under this section a variance request may be approved if it is based on factors which relate to the discharger's ability ultimately to achieve national limits but not if it is based on factors which merely affect the discharger's ability to meet the statutory deadlines of sections 301 and 307 of the Act such as labor difficulties, construction schedules, or unavailability of equipment.]

(2) The assertion that the national limits cannot be achieved with the appropriate waste treatment facilities installed, if such assertion is not based on factor(s) listed in paragraph (d) of this section;

[*Comment:* Review of the Administrator's action in promulgating national limits is available only through the judicial review procedures set forth in section 509(b) of the Act.]

(3) The discharger's ability to pay for the required waste treatment; or

(4) The impact of a discharge on local receiving water quality.

(f) Nothing in this section shall be construed to impair the right of any State or locality under section 510 of the Act to impose more stringent limitations than those required by Federal law.

§ 125.32 Method of application.

(a) A written request for a variance under this subpart shall be submitted in duplicate to the Director in accordance with part 124, subpart F.

(b) The burden is on the person requesting the variance to explain that:

(1) Factor(s) listed in § 125.31(b) regarding the discharger's facility are fundamentally different from the factors EPA considered in establishing the national limits. The requester should refer to all relevant material and information, such as the published guideline regulations development document, all associated technical and economic data collected for use in developing each national limit, all records of legal proceedings, and all written and printed documentation including records of communication, etc., relevant to the

regulations which are kept on public file by the EPA;

(2) The alternative limitations requested are justified by the fundamental difference alleged in paragraph (b)(1) of this section; and

(3) The appropriate requirements of § 125.31 have been met.

Subpart E—Criteria for Granting Economic Variances From Best Available Technology Economically Achievable Under Section 301(c) of the Act—[Reserved]

Subpart F—Criteria for Granting Water Quality Related Variances Under Section 301(g) of the Act—[Reserved]

Subpart G—Criteria for Modifying the Secondary Treatment Requirements Under Section 301(h) of the Clean Water Act

AUTHORITY: Clean Water Act, as amended by the Clean Water Act of 1977, 33 U.S.C. 1251 *et seq.*, unless otherwise noted.

SOURCE: 59 FR 40658, Aug. 9, 1994, unless otherwise noted.

§ 125.56 Scope and purpose.

This subpart establishes the criteria to be applied by EPA in acting on section 301(h) requests for modifications to the secondary treatment requirements. It also establishes special permit conditions which must be included in any permit incorporating a section 301(h) modification of the secondary treatment requirements (''section 301(h) modified permit'').

§ 125.57 Law governing issuance of a section 301(h) modified permit.

(a) Section 301(h) of the Clean Water Act provides that:

Administrator, with the concurrence of the State, may issue a permit under section 402 which modifies the requirements of paragraph (b)(1)(B) of this section with respect to the discharge of any pollutant from a publicly owned treatment works into marine waters, if the applicant demonstrates to the satisfaction of the Administrator that—

(1) There is an applicable water quality standard specific to the pollutant for which the modification is requested, which has been identified under section 304(a)(6) of this Act;

(2) The discharge of pollutants in accordance with such modified requirements will not interfere, alone or in combination with pollutants from other sources, with the attainment or maintenance of that water quality which assures protection of public water supplies and protection and propagation of a balanced indigenous population of shellfish, fish, and wildlife, and allows recreational activities, in and on the water;

(3) The applicant has established a system for monitoring the impact of such discharge on a representative sample of aquatic biota, to the extent practicable, and the scope of such monitoring is limited to include only those scientific investigations which are necessary to study the effects of the proposed discharge;

(4) Such modified requirements will not result in any additional requirements on any other point or nonpoint source;

(5) All applicable pretreatment requirements for sources introducing waste into such treatment works will be enforced;

(6) In the case of any treatment works serving a population of 50,000 or more, with respect to any toxic pollutant introduced into such works by an industrial discharger for which pollutant there is no applicable pretreatment requirement in effect, sources introducing waste into such works are in compliance with all applicable pretreatment requirements, the applicant will enforce such requirements, and the applicant has in effect a pretreatment program which, in combination with the treatment of discharges from such works, removes the same amount of such pollutant as would be removed if such works were to apply secondary treatment to discharges and if such works had no pretreatment program with respect to such pollutant;

(7) To the extent practicable, the applicant has established a schedule of activities designed to eliminate the entrance of toxic pollutants from nonindustrial sources into such treatment works;

(8) There will be no new or substantially increased discharges from the point source of the pollutant to which the modification applies above that volume of discharge specified in the permit;

(9) The applicant at the time such modification becomes effective will be discharging effluent which has received at least primary or equivalent treatment and which meets the criteria established under section 304(a)(1) of this Act after initial mixing in the waters surrounding or adjacent to the point at which such effluent is discharged.

For the purposes of this section, the phrase ''the discharge of any pollutant into marine waters'' refers to a discharge into deep waters of the territorial sea or the waters of

the contiguous zone, or into saline estuarine waters where there is strong tidal movement and other hydrological and geological characteristics which the Administrator determines necessary to allow compliance with paragraph (2) of this section, and section 101(a)(2) of this Act. For the purposes of paragraph (9), ''primary or equivalent treatment'' means treatment by screening, sedimentation, and skimming adequate to remove at least 30 percent of the biological oxygen demanding material and of the suspended solids in the treatment works influent, and disinfection, where appropriate. A municipality which applies secondary treatment shall be eligible to receive a permit pursuant to this subsection which modifies the requirements of paragraph (b)(1)(B) of this section with respect to the discharge of any pollutant from any treatment works owned by such municipality into marine waters. No permit issued under this subsection shall authorize the discharge of sewage sludge into marine waters. In order for a permit to be issued under this subsection for the discharge of a pollutant into marine waters, such marine waters must exhibit characteristics assuring that water providing dilution does not contain significant amounts of previously discharged effluent from such treatment works. No permit issued under this subsection shall authorize the discharge of any pollutant into saline estuarine waters which at the time of application do not support a balanced indigenous population of shellfish, fish, and wildlife, or allow recreation in and on the waters or which exhibit ambient water quality below applicable water quality standards adopted for the protection of public water supplies, shellfish, fish, and wildlife or recreational activities or such other standards necessary to assure support and protection of such uses. The prohibition contained in the preceding sentence shall apply without regard to the presence or absence of a causal relationship between such characteristics and the applicant's current or proposed discharge. Notwithstanding any other provisions of this subsection, no permit may be issued under this subsection for discharge of a pollutant into the New York Bight Apex consisting of the ocean waters of the Atlantic Ocean westward of 73 degrees 30 minutes west longitude and northward of 40 degrees 10 minutes north latitude.

(b) Section 301(j)(1) of the Clean Water Act provides that:

Any application filed under this section for a modification of the provisions of—

(A) subsection (b)(1)(B) under subsection (h) of this section shall be filed not later than the 365th day which begins after the date of enactment of the Municipal Wastewater Treatment Construction Grant Amendments of 1981, except that a publicly owned treatment works which prior to December 31, 1982, had a contractual arrangement to use a portion of the capacity of an ocean outfall operated by another publicly owned treatment works which has applied for or received modification under subsection (h) may apply for a modification of subsection (h) in its own right not later than 30 days after the date of the enactment of the Water Quality Act of 1987.

(c) Section 22(e) of the Municipal Wastewater Treatment Construction Grant Amendments of 1981, Public Law 97–117, provides that:

The amendments made by this section shall take effect on the date of enactment of this Act except that no applicant, other than the city of Avalon, California, who applies after the date of enactment of this Act for a permit pursuant to subsection (h) of section 301 of the Federal Water Pollution Control Act which modifies the requirements of subsection (b)(1)(B) of section 301 of such Act shall receive such permit during the one-year period which begins on the date of enactment of this Act.

(d) Section 303(b)(2) of the Water Quality Act, Public Law 100–4, provides that:

Section 301(h)(3) shall only apply to modifications and renewals of modifications which are tentatively or finally approved after the date of the enactment of this Act.

(e) Section 303(g) of the Water Quality Act provides that:

The amendments made to sections 301(h) and (h)(2), as well as provisions of (h)(6) and (h)(9), shall not apply to an application for a permit under section 301(h) of the Federal Water Pollution Control Act which has been tentatively or finally approved by the Administrator before the date of the enactment of this Act; except that such amendments shall apply to all renewals of such permits after such date of enactment.

§ 125.58 Definitions.

For the purpose of this subpart:

(a) *Administrator* means the EPA Administrator or a person designated by the EPA Administrator.

(b) *Altered discharge* means any discharge other than a current discharge or improved discharge, as defined in this regulation.

(c) *Applicant* means an applicant for a new or renewed section 301(h) modified permit. Large applicants have populations contributing to their POTWs equal to or more than 50,000 people or

average dry weather flows of 5.0 million gallons per day (mgd) or more; small applicants have contributing populations of less than 50,000 people and average dry weather flows of less than 5.0 mgd. For the purposes of this definition the contributing population and flows shall be based on projections for the end of the five-year permit term. Average dry weather flows shall be the average daily total discharge flows for the maximum month of the dry weather season.

(d) *Application* means a final application previously submitted in accordance with the June 15, 1979, section 301(h) regulations (44 FR 34784); an application submitted between December 29, 1981, and December 29, 1982; or a section 301(h) renewal application submitted in accordance with these regulations. It does not include a preliminary application submitted in accordance with the June 15, 1979, section 301(h) regulations.

(e) *Application questionnaire* means EPA's ''Applicant Questionnaire for Modification of Secondary Treatment Requirements,'' published as an appendix to this subpart.

(f) *Balanced indigenous population* means an ecological community which:

(1) Exhibits characteristics similar to those of nearby, healthy communities existing under comparable but unpolluted environmental conditions; or

(2) May reasonably be expected to become re-established in the polluted water body segment from adjacent waters if sources of pollution were removed.

(g) *Categorical pretreatment standard* means a standard promulgated by EPA under 40 CFR Chapter I, Subchapter N.

(h) *Current discharge* means the volume, composition, and location of an applicant's discharge at the time of permit application.

(i) *Improved discharge* means the volume, composition, and location of an applicant's discharge following:

(1) Construction of planned outfall improvements, including, without limitation, outfall relocation, outfall repair, or diffuser modification; or

(2) Construction of planned treatment system improvements to treatment levels or discharge characteristics; or

(3) Implementation of a planned program to improve operation and maintenance of an existing treatment system or to eliminate or control the introduction of pollutants into the applicant's treatment works.

(j) *Industrial discharger* or *industrial source* means any source of nondomestic pollutants regulated under section 307(b) or (c) of the Clean Water Act which discharges into a POTW.

(k) *Modified discharge* means the volume, composition, and location of the discharge proposed by the applicant for which a modification under section 301(h) of the Act is requested. A modified discharge may be a current discharge, improved discharge, or altered discharge.

(l) *New York Bight Apex* means the ocean waters of the Atlantic Ocean westward of 73 degrees 30 minutes west longitude and northward of 40 degrees 10 minutes north latitude.

(m) *Nonindustrial source* means any source of pollutants which is not an industrial source.

(n) *Ocean waters* means those coastal waters landward of the baseline of the territorial seas, the deep waters of the territorial seas, or the waters of the contiguous zone. The term ''ocean waters'' excludes saline estuarine waters.

(o) *Permittee* means an NPDES permittee with an effective section 301(h) modified permit.

(p) *Pesticides* means demeton, guthion, malathion, mirex, methoxychlor, and parathion.

(q) *Pretreatment* means the reduction of the amount of pollutants, the elimination of pollutants, or the alteration of the nature of pollutant properties in wastewater prior to or in lieu of discharging or otherwise introducing such pollutants into a POTW. The reduction or alteration may be obtained by physical, chemical, or biological processes, process changes, or by other means, except as prohibited by 40 CFR part 403.

(r) *Primary or equivalent treatment* for the purposes of this subpart means treatment by screening, sedimentation, and skimming adequate to remove at least 30 percent of the biochemical oxygen demanding material and of the suspended solids in the treatment works

influent, and disinfection, where appropriate.

(s) *Public water supplies* means water distributed from a public water system.

(t) *Public water system* means a system for the provision to the public of piped water for human consumption, if such system has at least fifteen (15) service connections or regularly serves at least twenty-five (25) individuals. This term includes: (1) Any collection, treatment, storage, and distribution facilities under the control of the operator of the system and used primarily in connection with the system, and (2) Any collection or pretreatment storage facilities not under the control of the operator of the system which are used primarily in connection with the system.

(u) *Publicly owned treatment works* or *POTW* means a treatment works, as defined in section 212(2) of the Act, which is owned by a State, municipality, or intermunicipal or interstate agency.

(v) *Saline estuarine waters* means those semi-enclosed coastal waters which have a free connection to the territorial sea, undergo net seaward exchange with ocean waters, and have salinities comparable to those of the ocean. Generally, these waters are near the mouth of estuaries and have cross-sectional annual mean salinities greater than twenty-five (25) parts per thousand.

(w) *Secondary removal equivalency* means that the amount of a toxic pollutant removed by the combination of the applicant's own treatment of its influent and pretreatment by its industrial users is equal to or greater than the amount of the toxic pollutant that would be removed if the applicant were to apply secondary treatment to its discharge where the discharge has not undergone pretreatment by the applicant's industrial users.

(x) *Secondary treatment* means the term as defined in 40 CFR part 133.

(y) *Shellfish, fish, and wildlife* means any biological population or community that might be adversely affected by the applicant's modified discharge.

(z) *Stressed waters* means those ocean waters for which an applicant can demonstrate to the satisfaction of the Administrator, that the absence of a balanced indigenous population is caused solely by human perturbations other than the applicant's modified discharge.

(aa) *Toxic pollutants* means those substances listed in 40 CFR 401.15.

(bb) *Water quality criteria* means scientific data and guidance developed and periodically updated by EPA under section 304(a)(1) of the Clean Water Act, which are applicable to marine waters.

(cc) *Water quality standards* means applicable water quality standards which have been approved, left in effect, or promulgated under section 303 of the Clean Water Act.

(dd) *Zone of initial dilution* (ZID) means the region of initial mixing surrounding or adjacent to the end of the outfall pipe or diffuser ports, provided that the ZID may not be larger than allowed by mixing zone restrictions in applicable water quality standards.

§ 125.59 General.

(a) *Basis for application.* An application under this subpart shall be based on a current, improved, or altered discharge into ocean waters or saline estuarine waters.

(b) *Prohibitions.* No section 301(h) modified permit shall be issued:

(1) Where such issuance would not assure compliance with all applicable requirements of this subpart and part 122;

(2) For the discharge of sewage sludge;

(3) Where such issuance would conflict with applicable provisions of State, local, or other Federal laws or Executive Orders. This includes compliance with the Coastal Zone Management Act of 1972, as amended, 16 U.S.C. 1451 *et seq.*; the Endangered Species Act of 1973, as amended, 16 U.S.C. 1531 *et seq.*; and Title III of the Marine Protection, Research and Sanctuaries Act, as amended, 16 U.S.C. 1431 *et seq.*;

(4) Where the discharge of any pollutant enters into saline estuarine waters which at the time of application do not support a balanced indigenous population of shellfish, fish, and wildlife, or allow recreation in and on the waters or which exhibit ambient water quality below applicable water quality standards adopted for the protection of public water supplies, shellfish, fish, and wildlife or recreational activities or

such other standards necessary to assure support and protection of such uses. The prohibition contained in the preceding sentence shall apply without regard to the presence or absence of a causal relationship between such characteristics and the applicant's current or proposed discharge; or

(5) Where the discharge of any pollutant is into the New York Bight Apex.

(c) *Applications.* Each applicant for a modified permit under this subpart shall submit an application to EPA signed in compliance with 40 CFR part 122, subpart B, which shall contain:

(1) A signed, completed NPDES Application Standard form A, parts I, II, III;

(2) A completed Application Questionnaire;

(3) The certification in accordance with 40 CFR 122.22(d);

(4) In addition to the requirements of § 125.59(c) (1) through (3), applicants for permit renewal shall support continuation of the modification by supplying to EPA the results of studies and monitoring performed in accordance with § 125.63 during the life of the permit. Upon a demonstration meeting the statutory criteria and requirements of this subpart, the permit may be renewed under the applicable procedures of 40 CFR part 124.

(d) *Revisions to applications.* (1) POTWs which submitted applications in accordance with the June 15, 1979, regulations (44 FR 34784) may revise their applications one time following a tentative decision to propose changes to treatment levels and/or outfall and diffuser location and design in accordance with § 125.59(f)(2)(i); and

(2) Other applicants may revise their applications one time following a tentative decision to propose changes to treatment levels and/or outfall and diffuser location and design in accordance with § 125.59(f)(2)(i). Revisions by such applicants which propose downgrading treatment levels and/or outfall and diffuser location and design must be justified on the basis of substantial changes in circumstances beyond the applicant's control since the time of application submission.

(3) Applicants authorized or requested to submit additional information under § 125.59(g) may submit a revised application in accordance with § 125.59(f)(2)(ii) where such additional information supports changes in proposed treatment levels and/or outfall location and diffuser design. The opportunity for such revision shall be in addition to the one-time revision allowed under § 125.59(d) (1) and (2).

(4) POTWs which revise their applications must:

(i) Modify their NPDES form and Application Questionnaire as needed to ensure that the information filed with their application is correct and complete;

(ii) Provide additional analysis and data as needed to demonstrate compliance with this subpart;

(iii) Obtain new State determinations under §§ 125.61(b)(2) and 125.64(b); and

(iv) Provide the certification described in paragraph (c)(3) of this section.

(5) Applications for permit renewal may not be revised.

(e) *Submittal of additional information to demonstrate compliance with §§ 125.60 and 125.65.* (1) On or before the deadline established in paragraph (f)(3) of this section, applicants shall submit a letter of intent to demonstrate compliance with §§ 125.60 and 125.65. The letter of intent is subject to approval by the Administrator based on the requirements of this paragraph and paragraph (f)(3) of this section. The letter of intent shall consist of the following:

(i) For compliance with § 125.60: (A) A description of the proposed treatment system which upgrades treatment to satisfy the requirements of § 125.60.

(B) A project plan, including a schedule for data collection and for achieving compliance with § 125.60. The project plan shall include dates for design and construction of necessary facilities, submittal of influent/effluent data, and submittal of any other information necessary to demonstrate compliance with § 125.60. The Administrator will review the project plan and may require revisions prior to authorizing submission of the additional information.

(ii) For compliance with § 125.65: (A) A determination of what approach will be used to achieve compliance with § 125.65.

(B) A project plan for achieving compliance. The project plan shall include any necessary data collection activities, submittal of additional information, and/or development of appropriate pretreatment limits to demonstrate compliance with § 125.65. The Administrator will review the project plan and may require revisions prior to submission of the additional information.

(iii) POTWs which submit additional information must:

(A) Modify their NPDES form and Application Questionnaire as needed to ensure that the information filed with their application is correct and complete;

(B) Obtain new State determinations under §§ 125.61(b)(2) and 125.64(b); and

(C) Provide the certification described in paragraph (c)(3) of this section.

(2) The information required under this paragraph must be submitted in accordance with the schedules in § 125.59(f)(3)(ii). If the applicant does not meet these schedules for compliance, EPA may deny the application on that basis.

(f) *Deadlines and distribution*—(1) *Applications.*(i) The application for an original 301(h) permit for POTWs which directly discharges effluent into saline waters shall be submitted to the appropriate EPA Regional Administrator no later than December 29, 1982.

(ii) The application for renewal of a 301(h) modified permit shall be submitted no less than 180 days prior to the expiration of the existing permit, unless permission for a later date has been granted by the Administrator. (The Administrator shall not grant permission for applications to be submitted later than the expiration date of the existing permit.)

(iii) A copy of the application shall be provided to the State and interstate agency(s) authorized to provide certification/concurrence under §§ 124.53 through 124.55 on or before the date the application is submitted to EPA.

(2) *Revisions to Applications.* (i) Applicants desiring to revise their applications under § 125.59 (d)(1) or (d)(2) must:

(A) Submit to the appropriate Regional Administrator a letter of intent to revise their application either within 45 days of the date of EPA's tentative decision on their original application or within 45 days of November 26, 1982, whichever is later. Following receipt by EPA of a letter of intent, further EPA proceedings on the tentative decision under 40 CFR part 124 will be stayed.

(B) Submit the revised application as described for new applications in § 125.59(f)(1) either within one year of the date of EPA's tentative decision on their original application or within one year of November 26, 1982, if a tentative decision has already been made, whichever is later.

(ii) Applicants desiring to revise their applications under § 125.59(d)(3) must submit the revised application as described for new applications in § 125.59(f)(1) concurrent with submission of the additional information under § 125.59(g).

(3) Deadline for additional information to demonstrate compliance with §§ 125.60 and 125.65.

(i) A letter of intent required under § 125.59(e)(1) must be submitted by the following dates: for permittees with 301(h) modifications or for applicants to which a tentative or final decision has been issued, November 7, 1994; for all others, within 90 days after the Administrator issues a tentative decision on an application. Following receipt by EPA of a letter of intent containing the information required in § 125.59(e)(1), further EPA proceedings on the tentative decision under 40 CFR part 124 will be stayed.

(ii) The project plan submitted under § 125.59(e)(1) shall ensure that the applicant meets all the requirements of §§ 125.60 and 125.65 by the following deadlines:

(A) By August 9, 1996 for applicants that are not grandfathered under § 125.59(j).

(B) At the time of permit renewal or by August 9, 1996, whichever is later, for applicants that are grandfathered under § 125.59(j).

(4) *State determination deadline.* State determinations, as required by §§ 125.61(b)(2) and 125.64(b) shall be filed by the applicant with the appropriate Regional Administrator no later than 90 days after submission of the revision to the application or additional information to EPA. Extensions to this

deadline may be provided by EPA upon request. However, EPA will not begin review of the revision to the application or additional information until a favorable State determination is received by EPA. Failure to provide the State determination within the timeframe required by this paragraph (f)(4) is a basis for denial of the application.

(g)(1) The Administrator may authorize or request an applicant to submit additional information by a specified date not to exceed one year from the date of authorization or request.

(2) Applicants seeking authorization to submit additional information on current/modified discharge characteristics, water quality, biological conditions or oceanographic characteristics must:

(i) Demonstrate that they made a diligent effort to provide such information with their application and were unable to do so, and

(ii) Submit a plan of study, including a schedule, for data collection and submittal of the additional information. EPA will review the plan of study and may require revisions prior to authorizing submission of the additional information.

(h) *Tentative decisions on section 301(h) modifications.* The Administrator shall grant a tentative approval or a tentative denial of a section 301(h) modified permit application. To qualify for a tentative approval, the applicant shall demonstrate to the satisfaction of the Administrator that it is using good faith means to come into compliance with all the requirements of this subpart and that it will meet all such requirements based on a schedule approved by the Administrator. For compliance with §§125.60 and 125.65, such schedule shall be in accordance with §125.59(f)(3)(ii).

(i) *Decisions on section 301(h) modifications.* (1) The decision to grant or deny a section 301(h) modification shall be made by the Administrator and shall be based on the applicant's demonstration that it has met all the requirements of §§125.59 through 125.68.

(2) No section 301(h) modified permit shall be issued until the appropriate State certification/concurrence is granted or waived pursuant to §124.54 or if the State denies certification/concurrence pursuant to §124.54.

(3) In the case of a modification issued to an applicant in a State administering an approved permit program under 40 CFR part 123, the State Director may:

(i) Revoke an existing permit as of the effective date of the EPA issued section 301(h) modified permit; and

(ii) Cosign the section 301(h) modified permit if the Director has indicated an intent to do so in the written concurrence.

(4) Any section 301(h) modified permit shall:

(i) Be issued in accordance with the procedures set forth in 40 CFR part 124, except that, because section 301(h) permits may be issued only by EPA, the terms ''Administrator or a person designated by the Administrator'' shall be substituted for the term ''Director'' as appropriate; and

(ii) Contain all applicable terms and conditions set forth in 40 CFR part 122 and §125.68.

(5) Appeals of section 301(h) determinations shall be governed by the procedures in 40 CFR part 124.

(j) *Grandfathering provision.* Applicants that received tentative or final approval for a section 301(h) modified permit prior to February 4, 1987, are not subject to §125.60, the water quality criteria provisions of §125.62(a)(1), or §125.65 until the time of permit renewal. In addition, if permit renewal will occur prior to August 9, 1996, applicants may have additional time to come into compliance with §§125.60 and 125.65, as determined appropriate by EPA on a case-by-case basis. Such additional time, however, shall not extend beyond August 9, 1996. This paragraph does not apply to any application that was initially tentatively approved, but as to which EPA withdrew its tentative approval or issued a tentative denial prior to February 4, 1987.

§125.60 Primary or equivalent treatment requirements.

(a) The applicant shall demonstrate that, at the time its modification becomes effective, it will be discharging effluent that has received at least primary or equivalent treatment.

(b) The applicant shall perform monitoring to ensure, based on the monthly average results of the monitoring, that the effluent it discharges has received primary or equivalent treatment.

(c)(1) An applicant may request that the demonstration of compliance with the requirement under paragraph (b) of this section to provide 30 percent removal of BOD be allowed on an averaging basis different from monthly (e.g., quarterly), subject to the demonstrations provided in paragraphs (c)(1)(i), (ii) and (iii) of this section. The Administrator may approve such requests if the applicant demonstrates to the Administrator's satisfaction that:

(i) The applicant's POTW is adequately designed and well operated;

(ii) The applicant will be able to meet all requirements under section 301(h) of the CWA and these subpart G regulations with the averaging basis selected; and

(iii) The applicant cannot achieve 30 percent removal on a monthly average basis because of circumstances beyond the applicant's control. Circumstances beyond the applicant's control may include seasonally dilute influent BOD concentrations due to relatively high (although nonexcessive) inflow and infiltration; relatively high soluble to insoluble BOD ratios on a fluctuating basis; or cold climates resulting in cold influent. Circumstances beyond the applicant's control shall not include less concentrated wastewater due to excessive inflow and infiltration (I&I). The determination of whether the less concentrated wastewater is the result of excessive I&I will be based on the definition of excessive I&I in 40 CFR 35.2005(b)(16) plus the additional criterion that inflow is nonexcessive if the total flow to the POTW (i.e., wastewater plus inflow plus infiltration) is less than 275 gallons per capita per day.

(2) In no event shall averaging on a less frequent basis than annually be allowed.

[59 FR 40658, Aug. 9, 1994, as amended at 61 FR 45833, Aug. 29, 1996]

§ 125.61 Existence of and compliance with applicable water quality standards.

(a) There must exist a water quality standard or standards applicable to the pollutant(s) for which a section 301(h) modified permit is requested, including:

(1) Water quality standards for biochemical oxygen demand or dissolved oxygen;

(2) Water quality standards for suspended solids, turbidity, light transmission, light scattering, or maintenance of the euphotic zone; and

(3) Water quality standards for pH.

(b) The applicant must: (1) Demonstrate that the modified discharge will comply with the above water quality standard(s); and

(2) Provide a determination signed by the State or interstate agency(s) authorized to provide certification under §§ 124.53 and 124.54 that the proposed modified discharge will comply with applicable provisions of State law including water quality standards. This determination shall include a discussion of the basis for the conclusion reached.

§ 125.62 Attainment or maintenance of water quality which assures protection of public water supplies; assures the protection and propagation of a balanced indigenous population of shellfish, fish, and wildlife; and allows recreational activities.

(a) *Physical characteristics of discharge.* (1) At the time the 301(h) modification becomes effective, the applicant's outfall and diffuser must be located and designed to provide adequate initial dilution, dispersion, and transport of wastewater such that the discharge does not exceed at and beyond the zone of initial dilution:

(i) All applicable water quality standards; and

(ii) All applicable EPA water quality criteria for pollutants for which there is no applicable EPA-approved water quality standard that directly corresponds to the EPA water quality criterion for the pollutant.

(iii) For purposes of paragraph (a)(1)(ii) of this section, a State water

quality standard ''directly corresponds'' to an EPA water quality criterion only if:

(A) The State water quality standard addresses the same pollutant as the EPA water quality criterion and

(B) The State water quality standard specifies a numeric criterion for that pollutant or State objective methodology for deriving such a numeric criterion.

(iv) The evaluation of compliance with paragraphs (a)(1) (i) and (ii) of this section shall be based upon conditions reflecting periods of maximum stratification and during other periods when discharge characteristics, water quality, biological seasons, or oceanographic conditions indicate more critical situations may exist.

(2) The evaluation under paragraph (a)(1)(ii) of this section as to compliance with applicable section 304(a)(1) water quality criteria shall be based on the following:

(i) *For aquatic life criteria:* The pollutant concentrations that must not be exceeded are the numeric ambient values, if any, specified in the EPA section 304(a)(1) water quality criteria documents as the concentrations at which acute and chronic toxicity to aquatic life occurs or that are otherwise identified as the criteria to protect aquatic life.

(ii) *For human health criteria for carcinogens:* (A) For a known or suspected carcinogen, the Administrator shall determine the pollutant concentration that shall not be exceeded. To make this determination, the Administrator shall first determine a level of risk associated with the pollutant that is acceptable for purposes of this section. The Administrator shall then use the information in the section 304(a)(1) water quality criterion document, supplemented by all other relevant information, to determine the specific pollutant concentration that corresponds to the identified risk level.

(B) For purposes of paragraph (a)(2)(ii)(A) of this section, an acceptable risk level will be a single level that has been consistently used, as determined by the Administrator, as the basis of the State's EPA-approved water quality standards for carcinogenic pollutants. Alternatively, the Administrator may consider a State's recommendation to use a risk level that has been otherwise adopted or formally proposed by the State. The State recommendation must demonstrate, to the satisfaction of the Administrator, that the recommended level is sufficiently protective of human health in light of the exposure and uncertainty factors associated with the estimate of the actual risk posed by the applicant's discharge. The State must include with its demonstration a showing that the risk level selected is based on the best information available and that the State has held a public hearing to review the selection of the risk level, in accordance with provisions of State law and public participation requirements of 40 CFR part 25. If the Administrator neither determines that there is a consistently used single risk level nor accepts a risk level recommended by the State, then the Administrator shall otherwise determine an acceptable risk level based on all relevant information.

(iii) *For human health criteria for noncarcinogens:* For noncarcinogenic pollutants, the pollutant concentrations that must not be exceeded are the numeric ambient values, if any, specified in the EPA section 304(a)(1) water quality criteria documents as protective against the potential toxicity of the contaminant through ingestion of contaminated aquatic organisms.

(3) The requirements of paragraphs (a)(1) and (a)(2) of this section apply in addition to, and do not waive or substitute for, the requirements of § 125.61.

(b) *Impact of discharge on public water supplies.* (1) The applicant's modified discharge must allow for the attainment or maintenance of water quality which assures protection of public water supplies.

(2) The applicant's modified discharge must not:

(i) Prevent a planned or existing public water supply from being used, or from continuing to be used, as a public water supply; or

(ii) Have the effect of requiring treatment over and above that which would be necessary in the absence of such discharge in order to comply with local and EPA drinking water standards.

(c) *Biological impact of discharge.* (1) The applicant's modified discharge must allow for the attainment or maintenance of water quality which assures protection and propagation of a balanced indigenous population of shellfish, fish, and wildlife.

(2) A balanced indigenous population of shellfish, fish, and wildlife must exist:

(i) Immediately beyond the zone of initial dilution of the applicant's modified discharge; and

(ii) In all other areas beyond the zone of initial dilution where marine life is actually or potentially affected by the applicant's modified discharge.

(3) Conditions within the zone of initial dilution must not contribute to extreme adverse biological impacts, including, but not limited to, the destruction of distinctive habitats of limited distribution, the presence of disease epicenter, or the stimulation of phytoplankton blooms which have adverse effects beyond the zone of initial dilution.

(4) In addition, for modified discharges into saline estuarine water:

(i) Benthic populations within the zone of initial dilution must not differ substantially from the balanced indigenous populations which exist immediately beyond the boundary of the zone of initial dilution;

(ii) The discharge must not interfere with estuarine migratory pathways within the zone of initial dilution; and

(iii) The discharge must not result in the accumulation of toxic pollutants or pesticides at levels which exert adverse effects on the biota within the zone of initial dilution.

(d) *Impact of discharge on recreational activities.* (1) The applicant's modified discharge must allow for the attainment or maintenance of water quality which allows for recreational activities beyond the zone of initial dilution, including, without limitation, swimming, diving, boating, fishing, and picnicking, and sports activities along shorelines and beaches.

(2) There must be no Federal, State, or local restrictions on recreational activities within the vicinity of the applicant's modified outfall unless such restrictions are routinely imposed around sewage outfalls. This exception shall not apply where the restriction would be lifted or modified, in whole or in part, if the applicant were discharging a secondary treatment effluent.

(e) *Additional requirements for applications based on improved or altered discharges.* An application for a section 301(h) modified permit on the basis of an improved or altered discharge must include:

(1) A demonstration that such improvements or alterations have been thoroughly planned and studied and can be completed or implemented expeditiously;

(2) Detailed analyses projecting changes in average and maximum monthly flow rates and composition of the applicant's discharge which are expected to result from proposed improvements or alterations;

(3) The assessments required by paragraphs (a) through (d) of this section based on its current discharge; and

(4) A detailed analysis of how the applicant's planned improvements or alterations will comply with the requirements of paragraphs (a) through (d) of this section.

(f) *Stressed waters.* An applicant must demonstrate compliance with paragraphs (a) through (e) of this section not only on the basis of the applicant's own modified discharge, but also taking into account the applicant's modified discharge in combination with pollutants from other sources. However, if an applicant which discharges into ocean waters believes that its failure to meet the requirements of paragraphs (a) through (e) of this section is entirely attributable to conditions resulting from human perturbations other than its modified discharge (including, without limitation, other municipal or industrial discharges, nonpoint source runoff, and the applicant's previous discharges), the applicant need not demonstrate compliance with those requirements if it demonstrates, to the satisfaction of the Administrator, that its modified discharge does not or will not:

(1) Contribute to, increase, or perpetuate such stressed conditions;

(2) Contribute to further degradation of the biota or water quality if the level of human perturbation from other sources increases; and

(3) Retard the recovery of the biota or water quality if the level of human perturbation from other sources decreases.

§125.63 Establishment of a monitoring program.

(a) *General requirements.* (1) The applicant must:

(i) Have a monitoring program that is:

(A) Designed to provide data to evaluate the impact of the modified discharge on the marine biota, demonstrate compliance with applicable water quality standards or water quality criteria, as applicable, and measure toxic substances in the discharge, and

(B) Limited to include only those scientific investigations necessary to study the effects of the proposed discharge;

(ii) Describe the sampling techniques, schedules and locations (including appropriate control sites), analytical techniques, quality control and verification procedures to be used in the monitoring program;

(iii) Demonstrate that it has the resources necessary to implement the program upon issuance of the modified permit and to carry it out for the life of the modified permit; and

(iv) Determine the frequency and extent of the monitoring program taking into consideration the applicant's rate of discharge, quantities of toxic pollutants discharged, and potentially significant impacts on receiving water quality, marine biota, and designated water uses.

(2) The Administrator may require revision of the proposed monitoring program before issuing a modified permit and during the term of any modified permit.

(b) *Biological monitoring program.* The biological monitoring program for both small and large applicants shall provide data adequate to evaluate the impact of the modified discharge on the marine biota.

(1) Biological monitoring shall include to the extent practicable:

(i) Periodic surveys of the biological communities and populations which are most likely affected by the discharge to enable comparisons with baseline conditions described in the application and verified by sampling at the control stations/reference sites during the periodic surveys;

(ii) Periodic determinations of the accumulation of toxic pollutants and pesticides in organisms and examination of adverse effects, such as disease, growth abnormalities, physiological stress, or death;

(iii) Sampling of sediments in areas of solids deposition in the vicinity of the ZID, in other areas of expected impact, and at appropriate reference sites to support the water quality and biological surveys and to measure the accumulation of toxic pollutants and pesticides; and

(iv) Where the discharge would affect commercial or recreational fisheries, periodic assessments of the conditions and productivity of fisheries.

(2) Small applicants are not subject to the requirements of paragraph (b)(1)(ii) through (iv) of this section if they discharge at depths greater than 10 meters and can demonstrate through a suspended solids deposition analysis that there will be negligible seabed accumulation in the vicinity of the modified discharge.

(3) For applicants seeking a section 301(h) modified permit based on:

(i) A current discharge, biological monitoring shall be designed to demonstrate ongoing compliance with the requirements of §125.62(c);

(ii) An improved discharge or altered discharge other than outfall relocation, biological monitoring shall provide baseline data on the current impact of the discharge and data which demonstrate, upon completion of improvements or alterations, that the requirements of §125.62(c) are met; or

(iii) An improved or altered discharge involving outfall relocation, the biological monitoring shall:

(A) Include the current discharge site until such discharge ceases; and

(B) Provide baseline data at the relocation site to demonstrate the impact of the discharge and to provide the basis for demonstrating that requirements of §125.62(c) will be met.

(c) *Water quality monitoring program.* The water quality monitoring program shall to the extent practicable:

(1) Provide adequate data for evaluating compliance with water quality

standards or water quality criteria, as applicable under § 125.62(a)(1);

(2) Measure the presence of toxic pollutants which have been identified or reasonably may be expected to be present in the discharge.

(d) *Effluent monitoring program.* (1) In addition to the requirements of 40 CFR part 122, to the extent practicable, monitoring of the POTW effluent shall provide quantitative and qualitative data which measure toxic substances and pesticides in the effluent and the effectiveness of the toxic control program.

(2) The permit shall require the collection of data on a frequency specified in the permit to provide adequate data for evaluating compliance with the percent removal efficiency requirements under § 125.60.

§ 125.64 Effect of the discharge on other point and nonpoint sources.

(a) No modified discharge may result in any additional pollution control requirements on any other point or nonpoint source.

(b) The applicant shall obtain a determination from the State or interstate agency(s) having authority to establish wasteload allocations indicating whether the applicant's discharge will result in an additional treatment pollution control, or other requirement on any other point or nonpoint sources. The State determination shall include a discussion of the basis for its conclusion.

§ 125.65 Urban area pretreatment program.

(a) *Scope and applicability.* (1) The requirements of this section apply to each POTW serving a population of 50,000 or more that has one or more toxic pollutants introduced into the POTW by one or more industrial dischargers and that seeks a section 301(h) modification.

(2) The requirements of this section apply in addition to any applicable requirements of 40 CFR part 403, and do not waive or substitute for the part 403 requirements in any way.

(b) *Toxic pollutant control.* (1) As to each toxic pollutant introduced by an industrial discharger, each POTW subject to the requirements of this section shall demonstrate that it either:

(i) Has an applicable pretreatment requirement in effect in accordance with paragraph (c) of this section; or

(ii) Has in effect a program that achieves secondary removal equivalency in accordance with paragraph (d) of this section.

(2) Each applicant shall demonstrate that industrial sources introducing waste into the applicant's treatment works are in compliance with all applicable pretreatment requirements, including numerical standards set by local limits, and that it will enforce those requirements.

(c) *Applicable pretreatment requirement.* (1) An applicable pretreatment requirement under paragraph (b)(1)(i) of this section with respect to a toxic pollutant shall consist of the following:

(i) As to a toxic pollutant introduced into the applicant's treatment works by an industrial discharger for which there is no applicable categorical pretreatment standard for the toxic pollutant, a local limit or limits on the toxic pollutant as necessary to satisfy the requirements of 40 CFR part 403; and

(ii) As to a toxic pollutant introduced into the applicant's treatment works by an industrial discharger that is subject to a categorical pretreatment standard for the toxic pollutant, the categorical standard and a local limit or limits as necessary to satisfy the requirements of 40 CFR part 403;

(iii) As to a toxic pollutant introduced into the applicant's treatment works by an industrial discharger for which there is no applicable categorical pretreatment standard for the toxic pollutant, and the 40 CFR part 403 analysis on the toxic pollutant shows that no local limit is necessary, the applicant shall demonstrate to EPA on an annual basis during the term of the permit through continued monitoring and appropriate technical review that a local limit is not necessary, and, where appropriate, require industrial management practices plans and other pollution prevention activities to reduce or control the discharge of each such pollutant by industrial dischargers to the POTW. If such monitoring and technical review of data indicate that a

local limit is needed, the POTW shall establish and implement a local limit.

(2) Any local limits developed to meet the requirements of paragraphs (b)(1)(i) and (c)(1) of this section shall be:

(i) Consistent with all applicable requirements of 40 CFR part 403 and

(ii) Subject to approval by the Administrator as part of the 301(h) application review. The Administrator may require such local limits to be revised as necessary to meet the requirements of this section or 40 CFR part 403.

(d) *Secondary removal equivalency.* An applicant shall demonstrate that it achieves secondary removal equivalency through the use of a secondary treatment pilot (demonstration) plant at the applicant's facility which provides an empirical determination of the amount of a toxic pollutant removed by the application of secondary treatment to the applicant's influent where the applicant's influent has not been pretreated. Alternatively, an applicant may make this determination using influent that has received industrial pretreatment, notwithstanding the definition of secondary removal equivalency in § 125.58(w). The NPDES permit shall include effluent limits based on the data from the secondary equivalency demonstration when those limits are more stringent than effluent limits based on State water quality standards or water quality criteria, if applicable, or are otherwise required to assure that all applicable environmental protection criteria are met. Once such effluent limits are established in the NPDES permit, the POTW may either establish local limits or perform additional treatment at the POTW or a combination of the two to achieve the permit limit.

§ 125.66 Toxics control program.

(a) *Chemical analysis.* (1) The applicant shall submit at the time of application a chemical analysis of its current discharge for all toxic pollutants and pesticides as defined in § 125.58(aa) and (p). The analysis shall be performed on two 24-hour composite samples (one dry weather and one wet weather). Applicants may supplement or substitute chemical analyses if composition of the supplemental or substitute samples typifies that which occurs during dry and wet weather conditions.

(2) Unless required by the State, this requirement shall not apply to any small section 301(h) applicant which certifies that there are no known or suspected sources of toxic pollutants or pesticides and documents the certification with an industrial user survey as described by 40 CFR 403.8(f)(2).

(b) *Identification of sources.* The applicant shall submit at the time of application an analysis of the known or suspected sources of toxic pollutants or pesticides identified in § 125.66(a). The applicant shall to the extent practicable categorize the sources according to industrial and nonindustrial types.

(c) *Industrial pretreatment requirements.* (1) An applicant that has known or suspected industrial sources of toxic pollutants shall have an approved pretreatment program in accordance with 40 CFR part 403.

(2) This requirement shall not apply to any applicant which has no known or suspected industrial sources of toxic pollutants or pesticides and so certifies to the Administrator.

(3) The pretreatment program submitted by the applicant under this section shall be subject to revision as required by the Administrator prior to issuing or renewing any section 301(h) modified permit and during the term of any such permit.

(4) Implementation of all existing pretreatment requirements and authorities must be maintained through the period of development of any additional pretreatment requirements that may be necessary to comply with the requirements of this subpart.

(d) *Nonindustrial source control program.* (1) The applicant shall submit a proposed public education program designed to minimize the entrance of nonindustrial toxic pollutants and pesticides into its POTW(s) which shall be implemented no later than 18 months after issuance of a 301(h) modified permit.

(2) The applicant shall also develop and implement additional nonindustrial source control programs on the

earliest possible schedule. This requirement shall not apply to a small applicant which certifies that there are no known or suspected water quality, sediment accumulation, or biological problems related to toxic pollutants or pesticides in its discharge.

(3) The applicant's nonindustrial source control programs under paragraph (d)(2) of this section shall include the following schedules which are to be implemented no later than 18 months after issuance of a section 301(h) modified permit:

(i) A schedule of activities for identifying nonindustrial sources of toxic pollutants and pesticides; and

(ii) A schedule for the development and implementation of control programs, to the extent practicable, for nonindustrial sources of toxic pollutants and pesticides.

(4) Each proposed nonindustrial source control program and/or schedule submitted by the applicant under this section shall be subject to revision as determined by the Administrator prior to issuing or renewing any section 301(h) modified permit and during the term of any such permit.

§ 125.67 Increase in effluent volume or amount of pollutants discharged.

(a) No modified discharge may result in any new or substantially increased discharges of the pollutant to which the modification applies above the discharge specified in the section 301(h) modified permit.

(b) Where pollutant discharges are attributable in part to combined sewer overflows, the applicant shall minimize existing overflows and prevent increases in the amount of pollutants discharged.

(c) The applicant shall provide projections of effluent volume and mass loadings for any pollutants to which the modification applies in 5-year increments for the design life of its facility.

§ 125.68 Special conditions for section 301(h) modified permits.

Each section 301(h) modified permit issued shall contain, in addition to all applicable terms and conditions required by 40 CFR part 122, the following:

(a) Effluent limitations and mass loadings which will assure compliance with the requirements of this subpart;

(b) A schedule or schedules of compliance for:

(1) Pretreatment program development required by § 125.66(c);

(2) Nonindustrial toxics control program required by § 125.66(d); and

(3) Control of combined sewer overflows required by § 125.67.

(c) Monitoring program requirements that include:

(1) Biomonitoring requirements of § 125.63(b);

(2) Water quality requirements of § 125.63(c);

(3) Effluent monitoring requirements of §§ 125.60(b), 125.62(c) and (d), and 125.63(d).

(d) Reporting requirements that include the results of the monitoring programs required by paragraph (c) of this section at such frequency as prescribed in the approved monitoring program.

APPENDIX TO PART 125 TO SUBPART G—APPLICANT QUESTIONNAIRE FOR MODIFICATION OF SECONDARY TREATMENT REQUIREMENTS

OMB Control Number 2040–0088 Expires on 2/28/96 Public reporting burden for this collection of information is estimated to average 1,295 - 19,552 hours per response, for small and large applicants, respectively. The reporting burden includes time for reviewing instructions, gathering data, including monitoring and toxics control activities, and completing and reviewing the questionnaire. Send comments regarding the burden estimate or any other aspect of this collection, including suggestions for reducing the burden, to Chief, Information Policy Branch, U.S. Environmental Protection Agency, 401 M St., SW (2136), Washington, DC 20460 and Office of Management and Budget, Office of Information and Regulatory Affairs, Attn: Desk Officer for EPA, Washington, DC 20503.

I. INTRODUCTION

1. This questionnaire is to be submitted by both small and large applicants for modification of secondary treatment requirements under section 301(h) of the Clean Water Act (CWA). A small applicant is defined as a POTW that has a contributing population to its wastewater treatment facility of less than 50,000 and a projected average dry weather flow of less than 5.0 million gallons per day (mgd, 0.22 cubic meters/sec) [40 CFR

125.58(c)]. A large applicant is defined as a POTW that has a population contributing to its wastewater treatment facility of at least 50,000 or a projected average dry weather flow of its discharge of at least 5.0 million gallons per day (mgd, 0.22 cubic meters/sec) [40 CFR 125.58(c)]. The questionnaire is in two sections, a general information and basic requirements section (part II) and a technical evaluation section (part III). Satisfactory completion by small and large dischargers of the appropriate questions of this questionnaire is necessary to enable EPA to determine whether the applicant's modified discharge meets the criteria of section 301(h) and EPA regulations (40 CFR part 125, subpart G).

2. Most small applicants should be able to complete the questionnaire using available information. However, small POTWs with low initial dilution discharging into shallow waters or waters with poor dispersion and transport characteristics, discharging near distinctive and susceptible biological habitats, or discharging substantial quantities of toxics should anticipate the need to collect additional information and/or conduct additional analyses to demonstrate compliance with section 301(h) criteria. If there are questions in this regard, applicants should contact the appropriate EPA Regional Office for guidance.

3. Guidance for responding to this questionnaire is provided by the newly amended section 301(h) technical support document. Where available information is incomplete and the applicant needs to collect additional data during the period it is preparing the application or a letter of intent, EPA encourages the applicant to consult with EPA prior to data collection and submission. Such consultation, particularly if the applicant provides a project plan, will help ensure that the proper data are gathered in the most efficient matter.

4. The notation (L) means large applicants must respond to the question, and (S) means small applicants must respond.

II. General Information and Basic Data Requirements

A. Treatment System Description

1. (L,S) On which of the following are you basing your application: a current discharge, improved discharge, or altered discharge, as defined in 40 CFR 125.58? [40 CFR 125.59(a)]

2. (L,S) Description of the Treatment/Outfall System [40 CFR 125.62(a) and 125.62(e)]

a. Provide detailed descriptions and diagrams of the treatment system and outfall configuration which you propose to satisfy the requirements of section 301(h) and 40 CFR part 125, subpart G. What is the total discharge design flow upon which this application is based?

b. Provide a map showing the geographic location of proposed outfall(s) (i.e., discharge). What is the latitude and longitude of the proposed outfall(s)?

c. For a modification based on an improved or altered discharge, provide a description and diagram of your current treatment system and outfall configuration. Include the current outfall's latitude and longitude, if different from the proposed outfall.

3. (L,S) Primary or equivalent treatment requirements [40 CFR 125.60]

a. Provide data to demonstrate that your effluent meets at least primary or equivalent treatment requirements as defined in 40 CFR 125.58(r) [40 CFR 125.60]

b. If your effluent does not meet the primary or equivalent treatment requirements, when do you plan to meet them? Provide a detailed schedule, including design, construction, start-up and full operation, with your application. This requirement must be met by the effective date of the new section 301(h) modified permit.

4. (L,S) Effluent Limitations and Characteristics [40 CFR 125.61(b) and 125.62(e)(2)]

a. Identify the final effluent limitations for five-day biochemical oxygen demand (BOD_5), suspended solids, and pH upon which your application for a modification is based:

—BOD_5 _____ mg/L
—Suspended solids _____ mg/L
—pH _____ (range)

b. Provide data on the following effluent characteristics for your current discharge as well as for the modified discharge if different from the current discharge:

Flow (m^3/sec):
—minimum
—average dry weather
—average wet weather
—maximum
—annual average

BOD_5 (mg/L) for the following plant flows:
—minimum
—average dry weather
—average wet weather
—maximum
—annual average

Suspended solids (mg/L) for the following plant flows:
—minimum
—average dry weather
—average wet weather
—maximum
—annual average

Toxic pollutants and pesticides (ug/L):
—list each toxic pollutant and pesticide
—list each 304(a)(1) criteria and toxic pollutant and pesticide

pH:
—minimum
—maximum

Dissolved oxygen (mg/L, prior to chlorination) for the following plant flows:

—minimum
—average dry weather
—average wet weather
—maximum
—annual average

Immediate dissolved oxygen demand (mg/L).

5. (L,S) Effluent Volume and Mass Emissions [40 CFR 125.62(e)(2) and 125.67]

a. Provide detailed analyses showing projections of effluent volume (annual average, m^3/sec) and mass loadings (mt/yr) of BOD_5 and suspended solids for the design life of your treatment facility in five-year increments. If the application is based upon an improved or altered discharge, the projections must be provided with and without the proposed improvements or alterations.

b. Provide projections for the end of your five-year permit term for 1) the treatment facility contributing population and 2) the average daily total discharge flow for the maximum month of the dry weather season.

6. (L,S) Average Daily Industrial Flow (m^3/sec). Provide or estimate the average daily industrial inflow to your treatment facility for the same time increments as in question II.A.5 above. [40 CFR 125.66]

7. (L,S) Combined Sewer Overflows [40 CFR 125.67(b)]

a. Does (will) your treatment and collection system include combined sewer overflows?

b. If yes, provide a description of your plan for minimizing combined sewer overflows to the receiving water.

8. (L,S) Outfall/Diffuser Design. Provide the following data for your current discharge as well as for the modified discharge, if different from the current discharge: [40 CFR 125.62(a)(1)]

—Diameter and length of the outfall(s) (meters)
—Diameter and length of the diffuser(s) (meters)
—Angle(s) of port orientation(s) from horizontal (degrees)
—Port diameter(s) (meters)
—Orifice contraction coefficient(s), if known
—Vertical distance from mean lower low water (or mean low water) surface and outfall port(s) centerline (meters)
—Number of ports
—Port spacing (meters)
—Design flow rate for each port, if multiple ports are used (m^3/sec)

B. Receiving Water Description

1. (L,S) Are you applying for a modification based on a discharge to the ocean [40 CFR 125.58(n)] or to a saline estuary [40 CFR 125.58(v)]? [40 CFR 125.59(a)].

2. (L,S) Is your current discharge or modified discharge to stressed waters as defined in 40 CFR 125.58(z)? If yes, what are the pollution sources contributing to the stress? [40 CFR 125.59(b)(4) and 125.62(f)].

3. (L,S) Provide a description and data on the seasonal circulation patterns in the vicinity of your current and modified discharge(s). [40 CFR 125.62(a)].

4. (L) Oceanographic conditions in the vicinity of the current and proposed modified discharge(s). Provide data on the following: [40 CFR 125.62(a)].

—Lowest ten percentile current speed (m/sec)
—Predominant current speed (m/sec) and direction (true) during the four seasons
—Period(s) of maximum stratification (months)
—Period(s) of natural upwelling events (duration and frequency, months)
—Density profiles during period(s) of maximum stratification

5. (L,S) Do the receiving waters for your discharge contain significant amounts of effluent previously discharged from the treatment works for which you are applying for a section 301(h) modified permit? [40 CFR 125.57(a)(9)]

6. Ambient water quality conditions during the period(s) of maximum stratification: at the zone of initial dilution (ZID) boundary, at other areas of potential impact, and at control stations. [40 CFR 125.62(a)]

a. (L) Provide profiles (with depth) on the following for the current discharge location and for the modified discharge location, if different from the current discharge:

—BOD_5 (mg/L)
—Dissolved oxygen (mg/L)
—Suspended solids (mg/L)
—pH
—Temperature (°C)
—Salinity (ppt)
—Transparency (turbidity, percent light transmittance)
—Other significant variables (e.g., nutrients, 304(a)(1) criteria and toxic pollutants and pesticides, fecal coliform bacteria)

b. (S) Provide available data on the following in the vicinity of the current discharge location and for the modified discharge location, if different from the current discharge: [40 CFR 125.61(b)(1)]

—Dissolved oxygen (mg/L)
—Suspended solids (mg/L)
—pH
—Temperature (°C)
—Salinity (ppt)
—Transparency (turbidity, percent light transmittance)
—Other significant variables (e.g., nutrients, 304(a)(1) criteria and toxic pollutants and pesticides, fecal coliform bacteria)

c. (L,S)Are there other periods when receiving water quality conditions may be more critical than the period(s) of maximum

stratification? If so, describe these and other critical periods and data requested in 6.a. for the other critical period(s). [40 CFR 125.62(a)(1)].

7. (L) Provide data on steady state sediment dissolved oxygen demand and dissolved oxygen demand due to resuspension of sediments in the vicinity of your current and modified discharge(s) (mg/L/day).

C. Biological Conditions

1. (L) Provide a detailed description of representative biological communities (e.g., plankton, macrobenthos, demersal fish, etc.) in the vicinity of your current and modified discharge(s): within the ZID, at the ZID boundary, at other areas of potential discharge-related impact, and at reference (control) sites. Community characteristics to be described shall include (but not be limited to) species composition; abundance; dominance and diversity; spatial/temporal distribution; growth and reproduction; disease frequency; trophic structure and productivity patterns; presence of opportunistic species; bioaccumulation of toxic materials; and the occurrence of mass mortalities.

2. (L,S)a. Are distinctive habitats of limited distribution (such as kelp beds or coral reefs) located in areas potentially affected by the modified discharge? [40 CFR 125.62(c)]

b. If yes, provide information on type, extent, and location of habitats.

3. (L,S)a. Are commercial or recreational fisheries located in areas potentially affected by the discharge? [40 CFR 125.62 (c) and (d)]

b. If yes, provide information on types, location, and value of fisheries.

D. State and Federal Laws [40 CFR 125.61 and 125.62(a)(1)]

1. (L,S) Are there water quality standards applicable to the following pollutants for which a modification is requested:

—Biochemical oxygen demand or dissolved oxygen?
—Suspended solids, turbidity, light transmission, light scattering, or maintenance of the euphotic zone?
—pH of the receiving water?

2. (L,S) If yes, what is the water use classification for your discharge area? What are the applicable standards for your discharge area for each of the parameters for which a modification is requested? Provide a copy of all applicable water quality standards or a citation to where they can be found.

3. (L,S) Will the modified discharge: [40 CFR 125.59(b)(3)].

—Be consistent with applicable State coastal zone management program(s) approved under the Coastal Zone Management Act as amended, 16 U.S.C. 1451 et seq.? [See 16 U.S.C. 1456(c)(3)(A)]
—Be located in a marine sanctuary designated under Title III of the Marine Protection, Research, and Sanctuaries Act (MPRSA) as amended, 16 U.S.C. 1431 et seq., or in an estuarine sanctuary designated under the Coastal Zone Management Act as amended, 16 U.S.C. 1461? If located in a marine sanctuary designated under Title III of the MPRSA, attach a copy of any certification or permit required under regulations governing such marine sanctuary. [See 16 U.S.C. 1432(f)(2)]
—Be consistent with the Endangered Species Act as amended, 16 U.S.C. 1531 et seq.? Provide the names of any threatened or endangered species that inhabit or obtain nutrients from waters that may be affected by the modified discharge. Identify any critical habitat that may be affected by the modified discharge and evaluate whether the modified discharge will affect threatened or endangered species or modify a critical habitat. [See 16 U.S.C. 1536(a)(2)].

4. (L,S) Are you aware of any State or Federal laws or regulations (other than the Clean Water Act or the three statutes identified in item 3 above) or an Executive Order which is applicable to your discharge? If yes, provide sufficient information to demonstrate that your modified discharge will comply with such law(s), regulation(s), or order(s). [40 CFR 125.59 (b)(3)].

III. TECHNICAL EVALUATION

A. Physical Characteristics of Discharge [40 CFR 125.62(a)]

1. (L,S) What is the critical initial dilution for your current and modified discharge(s) during (1) the period(s) of maximum stratification? and (2) any other critical period(s) of discharge volume/composition, water quality, biological seasons, or oceanographic conditions?

2. (L,S) What are the dimensions of the zone of initial dilution for your modified discharge(s)?

3. (L) What are the effects of ambient currents and stratification on dispersion and transport of the discharge plume/wastefield?

4. (S) Will there be significant sedimentation of suspended solids in the vicinity of the modified discharge?

5. (L) Sedimentation of suspended solids

a. What fraction of the modified discharge's suspended solids will accumulate within the vicinity of the modified discharge?

b. What are the calculated area(s) and rate(s) of sediment accumulation within the vicinity of the modified discharge(s) ($g/m^2/yr$)?

c. What is the fate of settleable solids transported beyond the calculated sediment accumulation area?

B. Compliance with Applicable Water Quality Standards and CWA §304(a)(1) water quality criteria [40 CFR 125.61(b) and 125.62(a)]

1. (L,S) What is the concentration of dissolved oxygen immediately following initial dilution for the period(s) of maximum stratification and any other critical period(s) of discharge volume/composition, water quality, biological seasons, or oceanographic conditions?

2. (L,S) What is the farfield dissolved oxygen depression and resulting concentration due to BOD exertion of the wastefield during the period(s) of maximum stratification and any other critical period(s)?

3. (L) What are the dissolved oxygen depressions and resulting concentrations near the bottom due to steady sediment demand and resuspension of sediments?

4. (L,S) What is the increase in receiving water suspended solids concentration immediately following initial dilution of the modified discharge(s)?

5. (L) What is the change in receiving water pH immediately following initial dilution of the modified discharge(s)?

6. (L,S) Does (will) the modified discharge comply with applicable water quality standards for:

—Dissolved oxygen?
—Suspended solids or surrogate standards?
—pH?

7. (L,S) Provide data to demonstrate that all applicable State water quality standards, and all applicable water quality criteria established under Section 304(a)(1) of the Clean Water Act for which there are no directly corresponding numerical applicable water quality standards approved by EPA, are met at and beyond the boundary of the ZID under critical environmental and treatment plant conditions in the waters surrounding or adjacent to the point at which your effluent is discharged. [40 CFR 125.62(a)(1)]

8. (L,S) Provide the determination required by 40 CFR 125.61(b)(2) for compliance with all applicable provisions of State law, including water quality standards or, if the determination has not yet been received, a copy of a letter to the appropriate agency(s) requesting the required determination.

C. Impact on Public Water Supplies [40 CFR 125.62(b)]

1. (L,S) Is there a planned or existing public water supply (desalinization facility) intake in the vicinity of the current or modified discharge?

2. (L,S) If yes:

a. What is the location of the intake(s) (latitude and longitude)?

b. Will the modified discharge(s) prevent the use of intake(s) for public water supply?

c. Will the modified discharge(s) cause increased treatment requirements for public water supply(s) to meet local, State, and EPA drinking water standards?

D. Biological Impact of Discharge [40 CFR 125.62(c)]

1. (L,S) Does (will) a balanced indigenous population of shellfish, fish, and wildlife exist:

—Immediately beyond the ZID of the current and modified discharge(s)?
—In all other areas beyond the ZID where marine life is actually or potentially affected by the current and modified discharge(s)?

2. (L,S) Have distinctive habitats of limited distribution been impacted adversely by the current discharge and will such habitats be impacted adversely by the modified discharge?

3. (L,S) Have commercial or recreational fisheries been impacted adversely by the current discharge (e.g., warnings, restrictions, closures, or mass mortalities) or will they be impacted adversely by the modified discharge?

4. (L,S*) Does the current or modified discharge cause the following within or beyond the ZID: [40 CFR 125.62(c)(3)]

—Mass mortality of fishes or invertebrates due to oxygen depletion, high concentrations of toxics, or other conditions?
—An increased incidence of disease in marine organisms?
—An abnormal body burden of any toxic material in marine organisms?
—Any other extreme, adverse biological impacts?

5. (L,S) For discharges into saline estuarine waters: [40 CFR 125.62 (c)(4)]

—Does or will the current or modified discharge cause substantial differences in the benthic population within the ZID and beyond the ZID?
—Does or will the current or modified discharge interfere with migratory pathways within the ZID?
—Does or will the current or modified discharge result in bioaccumulation of toxic pollutants or pesticides at levels which exert adverse effects on the biota within the ZID?

No section (h) modified permit shall be issued where the discharge enters into stressed saline estuarine waters as stated in 40 CFR 125.59(b)(4).

6. (L,S) For improved discharges, will the proposed improved discharge(s) comply with the requirements of 40 CFR 125.62(a) through 125.62(d)? [40 CFR 125.62(e)]

7. (L,S) For altered discharge(s), will the altered discharge(s) comply with the requirements of 40 CFR 125.62(a) through 125.62(d)? [40 CFR 125.62(e)]

8. (L,S) If your current discharge is to stressed ocean waters, does or will your current or modified discharge: [40 CFR 125.62(f)]

—Contribute to, increase, or perpetuate such stressed condition?

—Contribute to further degradation of the biota or water quality if the level of human perturbation from other sources increases?

—Retard the recovery of the biota or water quality if human perturbation from other sources decreases?

E. Impacts of Discharge on Recreational Activities [40 CFR 125.62(d)]

1. (L,S) Describe the existing or potential recreational activities likely to be affected by the modified discharge(s) beyond the zone of initial dilution.

2. (L,S) What are the existing and potential impacts of the modified discharge(s) on recreational activities? Your answer should include, but not be limited to, a discussion of fecal coliform bacteria.

3. (L,S) Are there any Federal, State, or local restrictions on recreational activities in the vicinity of the modified discharge(s)? If yes, describe the restrictions and provide citations to available references.

4. (L,S) If recreational restrictions exist, would such restrictions be lifted or modified if you were discharging a secondary treatment effluent?

F. Establishment of a Monitoring Program [40 CFR 125.63]

1. (L,S) Describe the biological, water quality, and effluent monitoring programs which you propose to meet the criteria of 40 CFR 125.63. Only those scientific investigations that are necessary to study the effects of the proposed discharge should be included in the scope of the 301(h) monitoring program [40 CFR 125.63(a)(1)(i)(B)].

2. (L,S) Describe the sampling techniques, schedules, and locations, analytical techniques, quality control and verification procedures to be used.

3. (L,S) Describe the personnel and financial resources available to implement the monitoring programs upon issuance of a modified permit and to carry it out for the life of the modified permit.

G. Effect of Discharge on Other Point and Nonpoint Sources [40 CFR 125.64]

1. (L,S) Does (will) your modified discharge(s) cause additional treatment or control requirements for any other point or nonpoint pollution source(s)?

2. (L,S) Provide the determination required by 40 CFR 125.64(b) or, if the determination has not yet been received, a copy of a letter to the appropriate agency(s) requesting the required determination.

H. Toxics Control Program and Urban Area Pretreatment Program [40 CFR 125.65 and 125.66]

1. a. (L,S) Do you have any known or suspected industrial sources of toxic pollutants or pesticides?

b. (L,S) If no, provide the certification required by 40 CFR 125.66(a)(2) for small dischargers, and required by 40 CFR 125.66(c)(2) for large dischargers.

c. (L,S*) Provide the results of wet and dry weather effluent analyses for toxic pollutants and pesticides as required by 40 CFR 125.66(a)(1). (* to the extent practicable)

d. (L,S*) Provide an analysis of known or suspected industrial sources of toxic pollutants and pesticides identified in (1)(c) above as required by 40 CFR 125.66(b). (* to the extent practicable)

2. (S)a. Are there any known or suspected water quality, sediment accumulation, or biological problems related to toxic pollutants or pesticides from your modified discharge(s)?

(S)b. If no, provide the certification required by 40 CFR 125.66(d)(2) together with available supporting data.

(S)c. If yes, provide a schedule for development and implementation of nonindustrial toxics control programs to meet the requirements of 40 CFR 126.66(d)(3).

(L)d. Provide a schedule for development and implementation of a nonindustrial toxics control program to meet the requirements of 40 CFR 125.66(d)(3).

3. (L,S) Describe the public education program you propose to minimize the entrance of nonindustrial toxic pollutants and pesticides into your treatment system. [40 CFR 125.66(d)(1)]

4. (L,S) Do you have an approved industrial pretreatment program?

a. If yes, provide the date of EPA approval.

b. If no, and if required by 40 CFR part 403 to have an industrial pretreatment program, provide a proposed schedule for development and implementation of your industrial pretreatment program to meet the requirements of 40 CFR part 403.

5. Urban area pretreatment requirement [40 CFR 125.65] Dischargers serving a population of 50,000 or more must respond.

a. Provide data on all toxic pollutants introduced into the treatment works from industrial sources (categorical and noncategorical).

b. Note whether applicable pretreatment requirements are in effect for each toxic pollutant. Are the industrial sources introducing such toxic pollutants in compliance with all of their pretreatment requirements? Are these pretreatment requirements being enforced? [40 CFR 125.65(b)(2)]

c. If applicable pretreatment requirements do not exist for each toxic pollutant in the

POTW effluent introduced by industrial sources,

—provide a description and a schedule for your development and implementation of applicable pretreatment requirements [40 CFR 125.65(c)], or

—describe how you propose to demonstrate secondary removal equivalency for each of those toxic pollutants, including a schedule for compliance, by using a secondary treatment pilot plant. [40 CFR 125.65(d)]

Subpart H—Criteria for Determining Alternative Effluent Limitations Under Section 316(a) of the Act

§ 125.70 Purpose and scope.

Section 316(a) of the Act provides that:

"With respect to any point source otherwise subject to the provisions of section 301 or section 306 of this Act, whenever the owner or operator of any such source, after opportunity for public hearing, can demonstrate to the satisfaction of the Administrator (or, if appropriate, the State) that any effluent limitation proposed for the control of the thermal component of any discharge from such source will require effluent limitations more stringent than necessary to assure the projection [sic] and propagation of a balanced, indigenous population of shellfish, fish and wildlife in and on the body of water into which the discharge is to be made, the Administrator (or, if appropriate, the State) may impose an effluent limitation under such sections on such plant, with respect to the thermal component of such discharge (taking into account the interaction of such thermal component with other pollutants), that will assure the protection and propagation of a balanced indigenous population of shellfish, fish and wildlife in and on that body of water."

This subpart describes the factors, criteria and standards for the establishment of alternative thermal effluent limitations under section 316(a) of the Act in permits issued under section 402(a) of the Act.

§ 125.71 Definitions.

For the purpose of this subpart:

(a) *Alternative effluent limitations* means all effluent limitations or standards of performance for the control of the thermal component of any discharge which are established under section 316(a) and this subpart.

(b) *Representative important species* means species which are representative, in terms of their biological needs, of a balanced, indigenous community of shellfish, fish and wildlife in the body of water into which a discharge of heat is made.

(c) The term *balanced, indigenous community* is synonymous with the term *balanced, indigenous population* in the Act and means a biotic community typically characterized by diversity, the capacity to sustain itself through cyclic seasonal changes, presence of necessary food chain species and by a lack of domination by pollution tolerant species. Such a community may include historically non-native species introduced in connection with a program of wildlife management and species whose presence or abundance results from substantial, irreversible environmental modifications. Normally, however, such a community will not include species whose presence or abundance is attributable to the introduction of pollutants that will be eliminated by compliance by all sources with section 301(b)(2) of the Act; and may not include species whose presence or abundance is attributable to alternative effluent limitations imposed pursuant to section 316(a).

§ 125.72 Early screening of applications for section 316(a) variances.

(a) Any initial application for a section 316(a) variance shall include the following early screening information:

(1) A description of the alternative effluent limitation requested;

(2) A general description of the method by which the discharger proposes to demonstrate that the otherwise applicable thermal discharge effluent limitations are more stringent than necessary;

(3) A general description of the type of data, studies, experiments and other information which the discharger intends to submit for the demonstration; and

(4) Such data and information as may be available to assist the Director in selecting the appropriate representative important species.

(b) After submitting the early screening information under paragraph (a) of

this section, the discharger shall consult with the Director at the earliest practicable time (but not later than 30 days after the application is filed) to discuss the discharger's early screening information. Within 60 days after the application is filed, the discharger shall submit for the Director's approval a detailed plan of study which the discharger will undertake to support its section 316(a) demonstration. The discharger shall specify the nature and extent of the following type of information to be included in the plan of study: Biological, hydrographical and meteorological data; physical monitoring data; engineering or diffusion models; laboratory studies; representative important species; and other relevant information. In selecting representative important species, special consideration shall be given to species mentioned in applicable water quality standards. After the discharger submits its detailed plan of study, the Director shall either approve the plan or specify any necessary revisions to the plan. The discharger shall provide any additional information or studies which the Director subsequently determines necessary to support the demonstration, including such studies or inspections as may be necessary to select representative important species. The discharger may provide any additional information or studies which the discharger feels are appropriate to support the demonstration.

(c) Any application for the renewal of a section 316(a) variance shall include only such information described in paragraphs (a) and (b) of this section and §124.73(c)(1) as the Director requests within 60 days after receipt of the permit application.

(d) The Director shall promptly notify the Secretary of Commerce and the Secretary of the Interior, and any affected State of the filing of the request and shall consider any timely recommendations they submit.

(e) In making the demonstration the discharger shall consider any information or guidance published by EPA to assist in making such demonstrations.

(f) If an applicant desires a ruling on a section 316(a) application before the ruling on any other necessary permit terms and conditions, (as provided by §124.65), it shall so request upon filing its application under paragraph (a) of this section. This request shall be granted or denied at the discretion of the Director.

NOTE: At the expiration of the permit, any discharger holding a section 316(a) variance should be prepared to support the continuation of the variance with studies based on the discharger's actual operation experience.

[44 FR 32948, June 7, 1979, as amended at 45 FR 33513, May 19, 1980]

§125.73 Criteria and standards for the determination of alternative effluent limitations under section 316(a).

(a) Thermal discharge effluent limitations or standards established in permits may be less stringent than those required by applicable standards and limitations if the discharger demonstrates to the satisfaction of the director that such effluent limitations are more stringent than necessary to assure the protection and propagation of a balanced, indigenous community of shellfish, fish and wildlife in and on the body of water into which the discharge is made. This demonstration must show that the alternative effluent limitation desired by the discharger, considering the cumulative impact of its thermal discharge together with all other significant impacts on the species affected, will assure the protection and propagation of a balanced indigenous community of shellfish, fish and wildlife in and on the body of water into which the discharge is to be made.

(b) In determining whether or not the protection and propagation of the affected species will be assured, the Director may consider any information contained or referenced in any applicable thermal water quality criteria and thermal water quality information published by the Administrator under section 304(a) of the Act, or any other information he deems relevant.

(c) (1) Existing dischargers may base their demonstration upon the absence of prior appreciable harm in lieu of predictive studies. Any such demonstrations shall show:

(i) That no appreciable harm has resulted from the normal component of the discharge (taking into account the interaction of such thermal component

with other pollutants and the additive effect of other thermal sources to a balanced, indigenous community of shellfish, fish and wildlife in and on the body of water into which the discharge has been made; or

(ii) That despite the occurrence of such previous harm, the desired alternative effluent limitations (or appropriate modifications thereof) will nevertheless assure the protection and propagation of a balanced, indigenous community of shellfish, fish and wildlife in and on the body of water into which the discharge is made.

(2) In determining whether or not prior appreciable harm has occurred, the Director shall consider the length of time in which the applicant has been discharging and the nature of the discharge.

Subpart I—Criteria Applicable to Cooling Water Intake Structures Under Section 316(b) of the Act—[Reserved]

Subpart J [Reserved]

Subpart K—Criteria and Standards for Best Management Practices Authorized Under Section 304(e) of the Act

§ 125.100 Purpose and scope.

This subpart describes how best management practices (BMPs) for ancillary industrial activities under section 304(e) of the Act shall be reflected in permits, including best management practices promulgated in effluent limitations under section 304 and established on a case-by-case basis in permits under section 402(a)(1) of the Act. Best management practices authorized by section 304(e) are included in permits as requirements for the purposes of section 301, 302, 306, 307, or 403 of the Act, as the case may be.

§ 125.101 Definition.

Manufacture means to produce as an intermediate or final product, or by-product.

§ 125.102 Applicability of best management practices.

Dischargers who use, manufacture, store, handle or discharge any pollutant listed as toxic under section 307(a)(1) of the Act or any pollutant listed as hazardous under section 311 of the Act are subject to the requirements of this Subpart for all activities which may result in significant amounts of those pollutants reaching waters of the United States. These activities are ancillary manufacturing operations including: Materials storage areas; in-plant transfer, process and material handling areas; loading and unloading operations; plant site runoff; and sludge and waste disposal areas.

§ 125.103 Permit terms and conditions.

(a) Best management practices shall be expressly incorporated into a permit where required by an applicable EPA promulgated effluent limitations guideline under section 304(e);

(b) Best management practices may be expressly incorporated into a permit on a case-by-case basis where determined necessary to carry out the provisions of the Act under section 402(a)(1). In issuing a permit containing BMP requirements, the Director shall consider the following factors:

(1) Toxicity of the pollutant(s);

(2) Quantity of the pollutant(s) used, produced, or discharged;

(3) History of NPDES permit violations;

(4) History of significant leaks or spills of toxic or hazardous pollutants;

(5) Potential for adverse impact on public health (e.g., proximity to a public water supply) or the environment (e.g., proximity to a sport or commerical fishery); and

(6) Any other factors determined to be relevant to the control of toxic or hazardous pollutants.

(c) Best management practices may be established in permits under paragraph (b) of this section alone or in combination with those required under paragraph (a) of this section.

(d) In addition to the requirements of paragraphs (a) and (b) of this section, dischargers covered under § 125.102 shall develop and implement a best management practices program in accordance

with § 125.104 which prevents, or minimizes the potential for, the release of toxic or hazardous pollutants from ancillary activities to waters of the United States.

§ 125.104 Best management practices programs.

(a) BMP programs shall be developed in accordance with good engineering practices and with the provisions of this subpart.

(b) The BMP program shall:

(1) Be documented in narrative form, and shall include any necessary plot plans, drawings or maps;

(2) Establish specific objectives for the control of toxic and hazardous pollutants.

(i) Each facility component or system shall be examined for its potential for causing a release of significant amounts of toxic or hazardous pollutants to waters of the United States due to equipment failure, improper operation, natural phenomena such as rain or snowfall, etc.

(ii) Where experience indicates a reasonable potential for equipment failure (e.g., a tank overflow or leakage), natural condition (e.g., precipitation), or other circumstances to result in significant amounts of toxic or hazardous pollutants reaching surface waters, the program should include a prediction of the direction, rate of flow and total quantity of toxic or hazardous pollutants which could be discharged from the facility as a result of each condition or circumstance;

(3) Establish specific best management practices to meet the objectives identified under paragraph (b)(2) of this section, addressing each component or system capable of causing a release of significant amounts of toxic or hazardous pollutants to the waters of the United States;

(4) *The BMP program:* (i) May reflect requirements for Spill Prevention Control and Countermeasure (SPCC) plans under section 311 of the Act and 40 CFR part 151, and may incorporate any part of such plans into the BMP program by reference;

[*Comment:* EPA has proposed section 311(j)(1)(c) regulations (43 FR 39276) which require facilities subject to NPDES to develop and implement SPCC plans to prevent discharges of reportable quantities of designated hazardous substances. While subpart K requires only procedural activities and minor construction, the proposed 40 CFR part 151 (SPCC regulations) are more stringent and comprehensive with respect to their requirements for spill prevention. In developing BMP programs in accordance with subpart K, owners or operators should also consider the requirements of proposed 40 CFR part 151 which may address many of the same areas of the facility covered by this subpart.]

(ii) Shall assure the proper management of solid and hazardous waste in accordance with regulations promulgated under the Solid Waste Disposal Act, as amended by the Resource Conservation and Recovery Act of 1976 (RCRA) (40 U.S.C. 6901 *et seq).* Management practices required under RCRA regulations shall be expressly incorporated into the BMP program; and

(iii) Shall address the following points for the ancillary activities in § 125.102:

(A) Statement of policy;

(B) Spill Control Committee;

(C) Material inventory;

(D) Material compatibility;

(E) Employee training:

(F) Reporting and notification procedures;

(G) Visual inspections;

(H) Preventive maintenance;

(I) Housekeeping; and

(J) Security.

[*Comment:* Additional technical information on BMPs and the elements of a BMP program is contained in publication entitled ''Guidance Manual for Developing Best Management Practices (BMP).'' Copies may be obtained by written request to the Office of Water Resource Center (mail code: 4100), Environmental Protection Agency, Washington, DC 20460].

(c)(1) The BMP program must be clearly described and submitted as part of the permit application. An application which does not contain a BMP

program shall be considered incomplete. Upon receipt of the application, the Director shall approve or modify the program in accordance with the requirements of this subpart. The BMP program as approved or modified shall be included in the draft permit (§ 124.6). The BMP program shall be subject to the applicable permit issuance requirements of part 124, resulting in the incorporation of the program (including any modifications of the program resulting from the permit issuance procedures) into the final permit.

(2) Proposed modifications to the BMP program which affect the discharger's permit obligations shall be submitted to the Director for approval. If the Director approves the proposed BMP program modification, the permit shall be modified in accordance with § 122.62, provided that the Director may waive the requirements for public notice and opportunity for hearing on such modification if he or she determines that the modification is not significant. The BMP program, or modification thereof, shall be fully implemented as soon as possible but not later than one year after permit issuance, modification, or revocation and reissuance unless the Director specifies a later date in the permit.

NOTE: A later date may be specified in the permit, for example, to enable coordinated preparation of the BMP program required under these regulations and the SPCC plan required under 40 CFR part 151 or to allow for the completion of construction projects related to the facility's BMP or SPCC program.

(d) The discharger shall maintain a description of the BMP program at the facility and shall make the description available to the Director upon request.

(e) The owner or operator of a facility subject to this subpart shall amend the BMP program in accordance with the provisions of this subpart whenever there is a change in facility design, construction, operation, or maintenance which materially affects the facility's potential for discharge of significant amounts of hazardous or toxic pollutants into the waters of the United States.

(f) If the BMP program proves to be ineffective in achieving the general objective of preventing the release of significant amounts of toxic or hazardous pollutants to those waters and the specific objectives and requirements under paragraph (b) of this section, the permit and/or the BMP program shall be subject to modification to incorporate revised BMP requirements.

(Clean Water Act, Safe Drinking Water Act, Clean Air Act, Resource Conservation and Recovery Act: 42 U.S.C. 6905, 6912, 6925, 6027, 6974)

[44 FR 32948, June 7, 1979, as amended at 45 FR 33513, May 19, 1980; 48 FR 14293, Apr. 1, 1983; 60 FR 53875, Oct. 18, 1995]

Subpart L—Criteria and Standards for Imposing Conditions for the Disposal of Sewage Sludge Under Section 405 of the Act [Reserved]

Subpart M—Ocean Discharge Criteria

SOURCE: 45 FR 65953, Oct. 3, 1980, unless otherwise noted.

§ 125.120 Scope and purpose.

This subpart establishes guidelines for issuance of National Pollutant Discharge Elimination System (NPDES) permits for the discharge of pollutants from a point source into the territorial seas, the contiguous zone, and the oceans.

§ 125.121 Definitions.

(a) *Irreparable harm* means significant undesirable effects occurring after the date of permit issuance which will not be reversed after cessation or modification of the discharge.

(b) *Marine environment* means that territorial seas, the contiguous zone and the oceans.

(c) *Mixing zone* means the zone extending from the sea's surface to seabed and extending laterally to a distance of 100 meters in all directions from the discharge point(s) or to the boundary of the zone of initial dilution as calculated by a plume model approved by the director, whichever is greater, unless the director determines that the more restrictive mixing zone or another definition of the mixing zone is more appropriate for a specific discharge.

(d) *No reasonable alternatives* means:

(1) No land-based disposal sites, discharge point(s) within internal waters, or approved ocean dumping sites within a reasonable distance of the site of the proposed discharge the use of which would not cause unwarranted economic impacts on the discharger, or, notwithstanding the availability of such sites,

(2) On-site disposal is environmentally preferable to other alternative means of disposal after consideration of:

(i) The relative environmental harm of disposal on-site, in disposal sites located on land, from discharge point(s) within internal waters, or in approved ocean dumping sites, and

(ii) The risk to the environment and human safety posed by the transportation of the pollutants.

(e) *Unreasonable degradation of the marine environment* means: (1) Significant adverse changes in ecosystem diversity, productivity and stability of the biological community within the area of discharge and surrounding biological communities,

(2) Threat to human health through direct exposure to pollutants or through consumption of exposed aquatic organisms, or

(3) Loss of esthetic, recreational, scientific or economic values which is unreasonable in relation to the benefit derived from the discharge.

§ 125.122 Determination of unreasonable degradation of the marine environment.

(a) The director shall determine whether a discharge will cause unreasonable degradation of the marine environment based on consideration of:

(1) The quantities, composition and potential for bioaccumulation or persistence of the pollutants to be discharged;

(2) The potential transport of such pollutants by biological, physical or chemical processes;

(3) The composition and vulnerability of the biological communities which may be exposed to such pollutants, including the presence of unique species or communities of species, the presence of species identified as endangered or threatened pursuant to the Endangered Species Act, or the presence of those species critical to the structure or function of the ecosystem, such as those important for the food chain;

(4) The importance of the receiving water area to the surrounding biological community, including the presence of spawning sites, nursery/forage areas, migratory pathways, or areas necessary for other functions or critical stages in the life cycle of an organism.

(5) The existence of special aquatic sites including, but not limited to marine sanctuaries and refuges, parks, national and historic monuments, national seashores, wilderness areas and coral reefs;

(6) The potential impacts on human health through direct and indirect pathways;

(7) Existing or potential recreational and commercial fishing, including finfishing and shellfishing;

(8) Any applicable requirements of an approved Coastal Zone Management plan;

(9) Such other factors relating to the effects of the discharge as may be appropriate;

(10) Marine water quality criteria developed pursuant to section 304(a)(1).

(b) Discharges in compliance with section 301(g), 301(h), or 316(a) variance requirements or State water quality standards shall be presumed not to cause unreasonable degradation of the marine environment, for any specific pollutants or conditions specified in the variance or the standard.

§ 125.123 Permit requirements.

(a) If the director on the basis of available information including that supplied by the applicant pursuant to § 125.124 determines prior to permit issuance that the discharge will not cause unreasonable degradation of the marine environment after application of any necessary conditions specified in § 125.123(d), he may issue an NPDES permit containing such conditions.

(b) If the director, on the basis of available information including that supplied by the applicant pursuant to § 125.124 determines prior to permit issuance that the discharge will cause unreasonable degradation of the marine environment after application of all possible permit conditions specified in § 125.123(d), he may not issue an

NPDES permit which authorizes the discharge of pollutants.

(c) If the director has insufficient information to determine prior to permit issuance that there will be no unreasonable degradation of the marine environment pursuant to §125.122, there shall be no discharge of pollutants into the marine environment unless the director on the basis of available information, including that supplied by the applicant pursuant to §125.124 determines that:

(1) Such discharge will not cause irreparable harm to the marine environment during the period in which monitoring is undertaken, and

(2) There are no reasonable alternatives to the on-site disposal of these materials, and

(3) The discharge will be in compliance with all permit conditions established pursuant to paragraph (d) of this section.

(d) All permits which authorize the discharge of pollutants pursuant to paragraph (c) of this section shall:

(1) Require that a discharge of pollutants will: (i) Following dilution as measured at the boundary of the mixing zone not exceed the limiting permissible concentration for the liquid and suspended particulate phases of the waste material as described in §227.27(a) (2) and (3), §227.27(b), and §227.27(c) of the Ocean Dumping Criteria; and (ii) not exceed the limiting permissible concentration for the solid phase of the waste material or cause an accumulation of toxic materials in the human food chain as described in §227.27 (b) and (d) of the Ocean Dumping Criteria;

(2) Specify a monitoring program, which is sufficient to assess the impact of the discharge on water, sediment, and biological quality including, where appropriate, analysis of the bioaccumulative and/or persistent impact on aquatic life of the discharge;

(3) Contain any other conditions, such as performance of liquid or suspended particulate phase bioaccumulation tests, seasonal restrictions on discharge, process modifications, dispersion of pollutants, or schedule of compliance for existing discharges, which are determined to be necessary because of local environmental conditions, and

(4) Contain the following clause: In addition to any other grounds specified herein, this permit shall be modified or revoked at any time if, on the basis of any new data, the director determines that continued discharges may cause unreasonable degradation of the marine environment.

§ 125.124 Information required to be submitted by applicant.

The applicant is responsible for providing information which the director may request to make the determination required by this subpart. The director may require the following information as well as any other pertinent information:

(a) An analysis of the chemical constituents of any discharge;

(b) Appropriate bioassays necessary to determine the limiting permissible concentrations for the discharge;

(c) An analysis of initial dilution;

(d) Available process modifications which will reduce the quantities of pollutants which will be discharged;

(e) Analysis of the location where pollutants are sought to be discharged, including the biological community and the physical description of the discharge facility;

(f) Evaluation of available alternatives to the discharge of the pollutants including an evaluation of the possibility of land-based disposal or disposal in an approved ocean dumping site.

PART 129—TOXIC POLLUTANT EFFLUENT STANDARDS

Subpart A—Toxic Pollutant Effluent Standards and Prohibitions

Sec.

129.1 Scope and purpose.
129.2 Definitions.
129.3 Abbreviations.
129.4 Toxic pollutants.
129.5 Compliance.
129.6 Adjustment of effluent standard for presence of toxic pollutant in the intake water.
129.7 Requirement and procedure for establishing a more stringent effluent limitation.
129.8 Compliance date.
129.9—129.99 [Reserved]
129.100 Aldrin/dieldrin.
129.101 DDT, DDD and DDE.

129.102 Endrin.
129.103 Toxaphene.
129.104 Benzidine.
129.105 Polychlorinated biphenyls (PCBs).

AUTHORITY: Secs. 307, 308, 501, Federal Water Pollution Control Act Amendments of 1972 (Pub. L. 92–500, 86 Stat. 816, (33 U.S.C. 1251 *et seq.*)).

SOURCE: 42 FR 2613, Jan. 12, 1977, unless otherwise noted.

Subpart A—Toxic Pollutant Effluent Standards and Prohibitions

§129.1 Scope and purpose.

(a) The provisions of this subpart apply to owners or operators of specified facilities discharging into navigable waters.

(b) The effluent standards or prohibitions for toxic pollutants established in this subpart shall be applicable to the sources and pollutants hereinafter set forth, and may be incorporated in any NPDES permit, modification or renewal thereof, in accordance with the provisions of this subpart.

(c) The provisions of 40 CFR parts 124 and 125 shall apply to any NPDES permit proceedings for any point source discharge containing any toxic pollutant for which a standard or prohibition is established under this part.

§129.2 Definitions.

All terms not defined herein shall have the meaning given them in the Act or in 40 CFR part 124 or 125. As used in this part, the term:

(a) *Act* means the Federal Water Pollution Control Act, as amended (Pub. L. 92–500, 86 Stat. 816 *et seq.*, 33 U.S.C. 1251 *et seq.*). Specific references to sections within the Act will be according to Pub. L. 92–500 notation.

(b) *Administrator* means the Administrator of the Environmental Protection Agency or any employee of the Agency to whom the Administrator may by order delegate the authority to carry out his functions under section 307(a) of the Act, or any person who shall by operation of law be authorized to carry out such functions.

(c) *Effluent standard* means, for purposes of section 307, the equivalent of *effluent limitation* as that term is defined in section 502(11) of the Act with the exception that it does not include a schedule of compliance.

(d) *Prohibited* means that the constituent shall be absent in any discharge subject to these standards, as determined by any analytical method.

(e) *Permit* means a permit for the discharge of pollutants into navigable waters under the National Pollutant Discharge Elimination System established by section 402 of the Act and implemented in regulations in 40 CFR parts 124 and 125.

(f) *Working day* means the hours during a calendar day in which a facility discharges effluents subject to this part.

(g) *Ambient water criterion* means that concentration of a toxic pollutant in a navigable water that, based upon available data, will not result in adverse impact on important aquatic life, or on consumers of such aquatic life, after exposure of that aquatic life for periods of time exceeding 96 hours and continuing at least through one reproductive cycle; and will not result in a significant risk of adverse health effects in a large human population based on available information such as mammalian laboratory toxicity data, epidemiological studies of human occupational exposures, or human exposure data, or any other relevant data.

(h) *New source* means any source discharging a toxic pollutant, the construction of which is commenced after proposal of an effluent standard or prohibition applicable to such source if such effluent standard or prohibition is thereafter promulgated in accordance with section 307.

(i) *Existing source* means any source which is not a new source as defined above.

(j) *Source* means any building, structure, facility, or installation from which there is or may be the discharge of toxic pollutants designated as such by the Administration under section 307(a)(1) of the Act.

(k) *Owner or operator* means any person who owns, leases, operates, controls, or supervises a source as defined above.

(l) *Construction* means any placement, assembly, or installation of facilities or equipment (including contractual obligations to purchase such

facilities or equipment) at the premises where such equipment will be used, including preparation work at such premises.

(m) *Manufacturer* means any establishment engaged in the mechanical or chemical transformation of materials or substances into new products including but not limited to the blending of materials such as pesticidal products, resins, or liquors.

(n) *Process wastes* means any designated toxic pollutant, whether in wastewater or otherwise present, which is inherent to or unavoidably resulting from any manufacturing process, including that which comes into direct contact with or results from the production or use of any raw material, intermediate product, finished product, by-product or waste product and is discharged into the navigable waters.

(o) *Air emissions* means the release or discharge of a toxic pollutant by an owner or operator into the ambient air either (1) by means of a stack or (2) as a fugitive dust, mist or vapor as a result inherent to the manufacturing or formulating process.

(p) *Fugitive dust, mist or vapor* means dust, mist or vapor containing a toxic pollutant regulated under this part which is emitted from any source other than through a stack.

(q) *Stack* means any chimney, flue, conduit, or duct arranged to conduct emissions to the ambient air.

(r) *Ten year 24-hour rainfall event* means the maximum precipitation event with a probable recurrence interval of once in 10 years as defined by the National Weather Service in Technical Paper No. 40, *Rainfall Frequency Atlas of the United States*, May 1961, and subsequent amendments or equivalent regional or State rainfall probability information developed therefrom.

(s) *State Director* means the chief administrative officer of a State or interstate water pollution control agency operating an approved HPDES permit program. In the event responsibility for water pollution control and enforcement is divided among two or more State or interstate agencies, the term *State Director* means the administrative officer authorized to perform the particular procedure to which reference is made.

§ 129.3 Abbreviations.

The abbreviations used in this part represent the following terms:

lb=pound (or pounds).
g=gram.
µg/l=micrograms per liter (1 one-millionth gram/liter).
kg=kilogram(s).
kkg=1000 kilogram(s).

§ 129.4 Toxic pollutants.

The following are the pollutants subject to regulation under the provisions of this subpart:

(a) Aldrin/Dieldrin—*Aldrin* means the compound aldrin as identified by the chemical name, 1,2,3,4,10,10-hexachloro-1,4,4a,5,8,8a-hexahydro-1,4 -endo-5,8-exo-dimethanonaphthalene; ''Dieldrin'' means the compound the dieldrin as identified by the chemical name 1,2,3,4,10,10-hexachloro-6,7-epoxy-1,4,4a,5,6,7,8,8a-octahydro-1,4-endo-5,8-exo-dimethanonaphthalene.

(b) DDT—*DDT* means the compounds DDT, DDD, and DDE as identified by the chemical names:(DDT)-1,1,1-trichloro-2,2-bis(p-chlorophenyl) ethane and someo,p′-isomers; (DDD) or (TDE)-1,1-dichloro-2,2-bis(p-chlorophenyl) ethane and some o,p′-isomers; (DDE)-1,1-dichloro-2,2-bis(p-chlorophenyl) ethylene.

(c) Endrin—*Endrin* means the compound endrin as identified by the chemical name 1,2,3,4,10,10-hexachloro-6,7-epoxy-1,4,4a,5,6,7,8,8a-octahydro-1,4-endo-5,8-endodimethanonaphthalene.

(d) Toxaphene—*Toxaphene* means a material consisting of technical grade chlorinated camphene having the approximate formula of $C_{10}H_{10}Cl_8$ and normally containing 67–69 percent chlorine by weight.

(e) Benzidine—*Benzidine* means the compound benzidine and its salts as identified by the chemical name 4,4′–diaminobiphenyl.

(f) Polychlorinated Biphenyls (PCBs) *polychlorinated biphenyls* (PCBs) means a mixture of compounds composed of the biphenyl molecule which has been chlorinated to varying degrees.

[42 FR 2613, Jan. 12, 1977, as amended at 42 FR 2620, Jan. 12, 1977; 42 FR 6555, Feb. 2, 1977]

§129.5 Compliance.

(a)(1) Within 60 days from the date of promulgation of any toxic pollutant effluent standard or prohibition each owner or operator with a discharge subject to that standard or prohibition must notify the Regional Administrator (or State Director, if appropriate) of such discharge. Such notification shall include such information and follow such procedures as the Regional Administrator (or State Director, if appropriate) may require.

(2) Any owner or operator who does not have a discharge subject to any toxic pollutant effluent standard at the time of such promulgation but who thereafter commences or intends to commence any activity which would result in such a discharge shall first notify the Regional Administrator (or State Director, if appropriate) in the manner herein provided at least 60 days prior to any such discharge.

(b) Upon receipt of any application for issuance or reissuance of a permit or for a modification of an existing permit for a discharge subject to a toxic pollutant effluent standard or prohibition the permitting authority shall proceed thereon in accordance with 40 CFR part 124 or 125, whichever is applicable.

(c)(1) Every permit which contains limitations based upon a toxic pollutant effluent standard or prohibition under this part is subject to revision following the completion of any proceeding revising such toxic pollutant effluent standard or prohibition regardless of the duration specified on the permit.

(2) For purposes of this section, all toxic pollutants for which standards are set under this part are deemed to be injurious to human health within the meaning of section 402(k) of the Act unless otherwise specified in the standard established for any particular pollutant.

(d)(1) Upon the compliance date for any section 307(a) toxic pollutant effluent standard or prohibition, each owner or operator of a discharge subject to such standard or prohibition shall comply with such monitoring, sampling, recording, and reporting conditions as the Regional Administrator (or State Director, if appropriate) may require for that discharge. Notice of such conditions shall be provided in writing to the owner or operator.

(2) In addition to any conditions required pursuant to paragraph (d)(1) of this section and to the extent not required in conditions contained in NPDES permits, within 60 days following the close of each calendar year each owner or operator of a discharge subject to any toxic standard or prohibition shall report to the Regional Administrator (or State Director, if appropriate) concerning the compliance of such discharges. Such report shall include, as a minimum, information concerning (i) relevant identification of the discharger such as name, location of facility, discharge points, receiving waters, and the industrial process or operation emitting the toxic pollutant; (ii) relevant conditions (pursuant to paragraph (d)(1) of this section or to an NPDES permit) as to flow, section 307(a) toxic pollutant concentrations, and section 307(a) toxic pollutant mass emission rate; (iii) compliance by the discharger with such conditions.

(3) When samples collected for analysis are composited, such samples shall be composited in proportion to the flow at time of collection and preserved in compliance with requirements of the Regional Administrator (or State Director, if appropriate), but shall include at least five samples, collected at approximately equal intervals throughout the working day.

(e)(1) Nothing in these regulations shall preclude a Regional Administrator from requiring in any permit a more stringent effluent limitation or standard pursuant to section 301(b)(1)(C) of the Act and implemented in 40 CFR 125.11 and other related provisions of 40 CFR part 125.

(2) Nothing in these regulations shall preclude the Director of a State Water Pollution Control Agency or interstate agency operating a National Pollutant Discharge Elimination System Program which has been approved by the Administrator pursuant to section 402 of the Act from requiring in any permit a more stringent effluent limitation or standard pursuant to section 301(b)(1)(C) of the Act and implemented in 40 CFR 124.42 and other related provisions of 40 CFR part 124.

(f) Any owner or operator of a facility which discharges a toxic pollutant to the navigable waters and to a publicly owned treatment system shall limit the summation of the mass emissions from both discharges to the less restrictive standard, either the direct discharge standard or the pretreatment standard; but in no case will this paragraph allow a discharge to the navigable waters greater than the toxic pollutant effluent standard established for a direct discharge to the navigable waters.

(g) In any permit hearing or other administrative proceeding relating to the implementation or enforcement of these standards, or any modification thereof, or in any judicial proceeding other than a petition for review of these standards pursuant to section 509(b)(1)(C) of the Act, the parties thereto may not contest the validity of any national standards established in this part, or the ambient water criterion established herein for any toxic pollutant.

§ 129.6 Adjustment of effluent standard for presence of toxic pollutant in the intake water.

(a) Upon the request of the owner or operator of a facility discharging a pollutant subject to a toxic pollutant effluent standard or prohibition, the Regional Administrator (or State Director, if appropriate) shall give credit, and shall adjust the effluent standard(s) in such permit to reflect credit for the toxic pollutant(s) in the owner's or operator's water supply if (1) the source of the owner's or operator's water supply is the same body of water into which the discharge is made and if (2) it is demonstrated to the Regional Administrator (or State Director, if appropriate) that the toxic pollutant(s) present in the owner's or operator's intake water will not be removed by any wastewater treatment systems whose design capacity and operation were such as to reduce toxic pollutants to the levels required by the applicable toxic pollutant effluent standards in the absence of the toxic pollutant in the intake water.

(b) Effluent limitations established pursuant to this section shall be calculated on the basis of the amount of section 307(a) toxic pollutant(s) present in the water after any water supply treatment steps have been performed by or for the owner or operator.

(c) Any permit which includes toxic pollutant effluent limitations established pursuant to this section shall also contain conditions requiring the permittee to conduct additional monitoring in the manner and locations determined by the Regional Administrator (or State Director, if appropriate) for those toxic pollutants for which the toxic pollutant effluent standards have been adjusted.

§ 129.7 Requirement and procedure for establishing a more stringent effluent limitation.

(a) *In exceptional cases:* (1) Where the Regional Administrator (or State Director, if appropriate) determines that the ambient water criterion established in these standards is not being met or will not be met in the receiving water as a result of one or more discharges at levels allowed by these standards, and

(2) Where he further determines that this is resulting in or may cause or contribute to significant adverse effects on aquatic or other organisms usually or potentially present, or on human health, he may issue to an owner or operator a permit or a permit modification containing a toxic pollutant effluent limitation at a more stringent level than that required by the standard set forth in these regulations. Any such action shall be taken pursuant to the procedural provisions of 40 CFR parts 124 and 125, as appropriate. In any proceeding in connection with such action the burden of proof and of going forward with evidence with regard to such more stringent effluent limitation shall be upon the Regional Administrator (or State Director, if appropriate) as the proponent of such more stringent effluent limitation.

(3) Evidence in such proceeding shall include at a minimum: An analysis using data and other information to demonstrate receiving water concentrations of the specified toxic pollutant, projections of the anticipated effects of the proposed modification on such receiving water concentrations, and the hydrologic and hydrographic

characteristics of the receiving waters including the occurrence of dispersion of the effluent. Detailed specifications for presenting relevant information by any interested party may be prescribed in guidance documents published from time to time, whose availability will be announced in the FEDERAL REGISTER.

(b) Any effluent limitation in an NPDES permit which a State proposes to issue which is more stringent than the toxic pollutant effluent standards promulgated by the Administrator is subject to review by the Administrator under section 402(d) of the Act. The Administrator may approve or disapprove such limitation(s) or specify another limitation(s) upon review of any record of any proceedings held in connection with the permit issuance or modification and any other evidence available to him. If he takes no action within ninety days of his receipt of the notification of the action of the permit issuing authority and any record thereof, the action of the State permit issuing authority shall be deemed to be approved.

§ 129.8 Compliance date.

(a) The effluent standards or prohibitions set forth herein shall be complied with not later than one year after promulgation unless an earlier date is established by the Administrator for an industrial subcategory in the promulgation of the standards or prohibitions.

(b) Toxic pollutant effluent standards or prohibitions set forth herein shall become enforceable under sections 307(d) and 309 of the Act on the date established in paragraph (a) of this section regardless of proceedings in connection with the issuance of any NPDES permit or application therefor, or modification or renewal thereof.

§§ 129.9—129.99 [Reserved]

§ 129.100 Aldrin/dieldrin.

(a) *Specialized definitions.* (1) *Aldrin/Dieldrin manufacturer* means a manufacturer, excluding any source which is exclusively an aldrin/dieldrin formulator, who produces, prepares or processes technical aldrin or dieldrin or who uses aldrin or dieldrin as a material in the production, preparation or processing of another synthetic organic substance.

(2) *Aldrin/Dieldrin formulator* means a person who produces, prepares or processes a formulated product comprising a mixture of either aldrin or dieldrin and inert materials or other diluents, into a product intended for application in any use registered under the Federal Insecticide, Fungicide and Rodenticide Act, as amended (7 U.S.C. 135, *et seq.*).

(3) The ambient water criterion for aldrin/dieldrin in navigable waters is 0.003 μg/l.

(b) *Aldrin/dieldrin manufacturer*—(1) *Applicability.* (i) These standards or prohibitions apply to:

(A) All discharges of process wastes; and

(B) All discharges from the manufacturing areas, loading and unloading areas, storage areas and other areas which are subject to direct contamination by aldrin/dieldrin as a result of the manufacturing process, including but not limited to:

(*1*) Stormwater and other runoff except as hereinafter provided in paragraph (b)(1)(ii) of this section; and

(*2*) Water used for routine cleanup or cleanup of spills.

(ii) These standards do not apply to stormwater runoff or other discharges from areas subject to contamination solely by fallout from air emissions of aldrin/dieldrin; or to stormwater runoff that exceeds that from the ten year 24-hour rainfall event.

(2) *Analytical method acceptable.* Environmental Protection Agency method specified in 40 CFR part 136, except that a 1-liter sample size is required to increase the analytical sensitivity.

(3) *Effluent standard*—(i) *Existing sources.* Aldrin or dieldrin is prohibited in any discharge from any aldrin/dieldrin manufacturer.

(ii) *New Sources.* Aldrin or dieldrin is prohibited in any discharge from any aldrin/dieldrin manufacturer.

(c) *Aldrin/dieldrin formulator*—(1) *Applicability.* (i) These standards or prohibitions apply to:

(A) All discharges of process wastes; and

(B) All discharges from the formulating areas, loading and unloading areas, storage areas and other areas which are subject to direct contamination by

aldrin/dieldrin as a result of the formulating process, including but not limited to:

(*1*) Stormwater and other runoff except as hereinafter provided in paragraph (c)(1)(ii) of this section; and

(*2*) Water used for routine cleanup or cleanup of spills.

(ii) These standards do not apply to stormwater runoff or other discharges from areas subject to contamination solely by fallout from air emissions of aldrin/dieldrin; or to stormwater runoff that exceeds that from the ten year 24-hour rainfall event.

(2) *Analytical method acceptable.* Environmental Protection Agency method specified in 40 CFR part 136, except that a 1-liter sample size is required to increase the analytical sensitivity.

(3) *Effluent standard*—(i) *Existing sources.* Aldrin or dieldrin is prohibited in any discharge from any aldrin/dieldrin formulator.

(ii) *New sources.* Aldrin or dieldrin is prohibited in any discharge from any aldrin/dieldrin formulator.

§ 129.101 DDT, DDD and DDE.

(a) *Specialized definitions.* (1) *DDT Manufacturer* means a manufacturer, excluding any source which is exclusively a DDT formulator, who produces, prepares or processes technical DDT, or who uses DDT as a material in the production, preparation or processing of another synthetic organic substance.

(2) *DDT formulator* means a person who produces, prepares or processes a formulated product comprising a mixture of DDT and inert materials or other diluents into a product intended for application in any use registered under the Federal Insecticide, Fungicide and Rodenticide Act, as amended (7 U.S.C. 135, et seq.).

(3) The ambient water criterion for DDT in navigable waters is 0.001 μg/l.

(b) *DDT manufacturer*—(1) *Applicability.* (i) These standards or prohibitions apply to:

(A) All discharges of process wastes; and

(B) All discharges from the manufacturing areas, loading and unloading areas, storage areas and other areas which are subject to direct contamination by DDT as a result of the manufacturing process, including but not limited to:

(*1*) Stormwater and other runoff except as hereinafter provided in paragraph (b)(1)(ii) of this section; and

(*2*) Water used for routine cleanup or cleanup of spills.

(ii) These standards do not apply to stormwater runoff or other discharges from areas subject to contamination solely by fallout from air emissions of DDT; or to stormwater runoff that exceeds that from the ten year 24-hour rainfall event.

(2) *Analytical method acceptable.* Environmental Protection Agency method specified in 40 CFR part 136, except that a 1-liter sample size is required to increase the analytical sensitivity.

(3) *Effluent standard*—(i) *Existing sources.* DDT is prohibited in any discharge from any DDT manufacturer.

(ii) *New sources.* DDT is prohibited in any discharge from any DDT manufacturer.

(c) *DDT formulator*—(1) *Applicability.* (i) These standards or prohibitions apply to:

(A) All discharges of process wastes; and

(B) All discharges from the formulating areas, loading and unloading areas, storage areas and other areas which are subject to direct contamination by DDT as a result of the formulating process, including but not limited to:

(*1*) Stormwater and other runoff except as hereinafter provided in paragraph (c)(1)(ii) of this section; and

(*2*) Water used for routine cleanup or cleanup of spills.

(ii) These standards do not apply to stormwater runoff or other discharges from areas subject to contamination solely by fallout from air emissions of DDT; or to stormwater runoff that exceeds that from the ten year 24-hour rainfall event.

(2) *Analytical method acceptable.* Environmental Protection Agency method specified in 40 CFR part 136, except that a 1-liter sample size is required to increase the analytical sensitivity.

(3) *Effluent standard*—(i) *Existing sources.* DDT is prohibited in any discharge from any DDT formulator.

(ii) *New Sources.* DDT is prohibited in any discharge from any DDT formulator.

§ 129.102 Endrin.

(a) *Specialized definitions.* (1) *Endrin Manufacturer* means a manufacturer, excluding any source which is exclusively an endrin formulator, who produces, prepares or processes technical endrin or who uses endrin as a material in the production, preparation or processing of another synthetic organic substance.

(2) *Endrin Formulator* means a person who produces, prepares or processes a formulated product comprising a mixture of endrin and inert materials or other diluents into a product intended for application in any use registered under the Federal Insecticide, Fungicide and Rodenticide Act, as amended (7 U.S.C. 135, et seq.).

(3) The ambient water criterion for endrin in navigable waters is 0.004 µg/l.

(b) *Endrin manufacturer*—(1) *Applicability.* (i) These standards or prohibitions apply to:

(A) All discharges of process wastes; and

(B) All discharges from the manufacturing areas, loading and unloading areas, storage areas and other areas which are subject to direct contamination by endrin as a result of the manufacturing process, including but not limited to:

(*1*) Stormwater and other runoff except as hereinafter provided in paragraph (b)(1)(ii) of this section; and

(*2*) Water used for routine cleanup or cleanup of spills.

(ii) These standards do not apply to stormwater runoff or other discharges from areas subject to contamination solely by fallout from air emissions of endrin; or to stormwater runoff that exceeds that from the ten year 24-hour rainfall event.

(2) *Analytical method acceptable*—Environmental Protection Agency method specified in 40 CFR part 136.

(3) *Effluent standard*—(i) *Existing sources.* Discharges from an endrin manufacturer shall not contain endrin concentrations exceeding an average per working day of 1.5 µg/l calculated over any calendar month; and shall not exceed a monthly average daily loading of 0.0006 kg/kkg of endrin produced; and shall not exceed 7.5 µg/l in a sample(s) representing any working day.

(ii) *New sources.* Discharges from an endrin manufacturer shall not contain endrin concentrations exceeding an average per working day of 0.1 µg/l calculated over any calendar month; and shall not exceed a monthly average daily loading of 0.00004 kg/kkg of endrin produced; and shall not exceed 0.5 µg/l in a sample(s) representing any working day.

(iii) *Mass emission standard during shutdown of production.* In computing the allowable monthly average daily loading figure required under the preceding paragraphs (b)(3) (i) and (ii) of this section, for any calendar month for which there is no endrin being manufactured at any plant or facility which normally contributes to the discharge which is subject to these standards, the applicable production value shall be deemed to be the average monthly production level for the most recent preceding 360 days of actual operation of the plant or facility.

(c) *Endrin formulator*—(1) *Applicability.* (i) These standards or prohibitions apply to:

(A) All discharges of process wastes; and

(B) All discharges from the formulating areas, loading and unloading areas, storage areas and other areas which are subject to direct contamination by endrin as a result of the formulating process, including but not limited to: (*1*) Stormwater and other runoff except as hereinafter provided in paragraph (c)(1)(ii) of this section; and (*2*) water used for routine cleanup or cleanup of spills.

(ii) These standards do not apply to stormwater runoff or other discharges from areas subject to contamination solely by fallout from air emissions of endrin; or to storm-water runoff that exceeds that from the ten year 24-hour rainfall event.

(2) *Analytical method acceptable*—Environmental Protection Agency method specified in 40 CFR part 136, except that a 1-liter sample size is required to increase the analytical sensitivity.

(3) *Effluent standard*—(i) *Existing sources.* Endrin is prohibited in any discharge from any endrin formulator.

(ii) New sources—Endrin is prohibited in any discharge from any endrin formulator.

(d) The standards set forth in this section shall apply to the total combined weight or concentration of endrin, excluding any associated element or compound.

§ 129.103 Toxaphene.

(a) *Specialized definitions.* (1) *Toxaphene manufacturer* means a manufacturer, excluding any source which is exclusively a toxaphene formulator, who produces, prepares or processes toxaphene or who uses toxaphene as a material in the production, preparation or processing of another synthetic organic substance.

(2) *Toxaphene formulator* means a person who produces, prepares or processes a formulated product comprising a mixture of toxaphene and inert materials or other diluents into a product intended for application in any use registered under the Federal Insecticide, Fungicide and Rodenticide Act, as amended (7 U.S.C. 135, *et seq.*).

(3) The ambient water criterion for toxaphene in navigable waters is 0.005 µg/l.

(b) *Toxaphene manufacturer*—(1) *Applicability.* (i) These standards or prohibitions apply to:

(A) All discharges of process wastes; and

(B) All discharges from the manufacturing areas, loading and unloading areas, storage areas and other areas which are subject to direct contamination by toxaphene as a result of the manufacturing process, including but not limited to: (*1*) Stormwater and other runoff except as hereinafter provided in paragraph (b)(1)(ii) of this section; and (*2*) water used for routine cleanup or cleanup of spills.

(ii) These standards do not apply to stormwater runoff or other discharges from areas subject to contamination solely by fallout from air emissions of toxaphene; or to stormwater runoff that exceeds that from the ten year 24-hour rainfall event.

(2) *Analytical method acceptable*—Environmental Protection Agency method specified in 40 CFR part 136.

(3) *Effluent standard*—(i) *Existing sources.* Discharges from a toxaphene manufacturer shall not contain toxaphene concentrations exceeding an average per working day of 1.5 µg/l calculated over any calendar month; and shall not exceed a monthly average daily loading of 0.00003 kg/kkg of toxaphene produced, and shall not exceed 7.5 µg/l in a sample(s) representing any working day.

(ii) *New sources.* Discharges from a toxaphene manufacturer shall not contain toxaphene concentrations exceeding an average per working day of 0.1 µg/l calculated over any calendar month; and shall not exceed a monthly average daily loading of 0.000002 kg/kkg of toxaphene produced, and shall not exceed 0.5 µ/l in a sample(s) representing any working day.

(iii) *Mass emission during shutdown of production.* In computing the allowable monthly average daily loading figure required under the preceding paragraphs (b)(3)(i) and (ii) of this section, for any calendar month for which there is no toxaphene being manufactured at any plant or facility which normally contributes to the discharge which is subject to these standards, the applicable production value shall be deemed to be the average monthly production level for the most recent preceding 360 days of actual operation of the plant or facility.

(c) *Toxaphene formulator*—(1) *Applicability.* (i) These standards or prohibitions apply to:

(A) All discharges of process wastes; and

(B) All discharges from the formulating areas, loading and unloading areas, storage areas and other areas which are subject to direct contamination by toxaphene as a result of the formulating process, including but not limited to: (*1*) Stormwater and other runoff except as hereinafter provided in paragraph (c)(1)(ii) of this section; and (*2*) water used for routine cleanup or cleanup of spills.

(ii) These standards do not apply to stormwater runoff or other discharges from areas subject to contamination solely by fallout from air emissions of toxaphene; or to stormwater runoff that exceeds that from the ten year 24-hour rainfall event.

(2) *Analytical method acceptable*—Environmental Protection Agency method specified in 40 CFR part 136, except that a 1-liter sample size is required to increase the analytical sensitivity.

(3) *Effluent standards*—(i) *Existing sources.* Toxaphene is prohibited in any discharge from any toxaphene formulator.

(ii) *New sources.* Toxaphene is prohibited in any discharge from any toxaphene formulator.

(d) The standards set forth in this section shall apply to the total combined weight or concentration of toxaphene, excluding any associated element or compound.

§ 129.104 Benzidine.

(a) *Specialized definitions.* (1) *Benzidine Manufacturer* means a manufacturer who produces benzidine or who produces benzidine as an intermediate product in the manufacture of dyes commonly used for textile, leather and paper dyeing.

(2) *Benzidine-Based Dye Applicator* means an owner or operator who uses benzidine-based dyes in the dyeing of textiles, leather or paper.

(3) The ambient water criterion for benzidine in navigable waters is 0.1 μg/l.

(b) *Benzidine manufacturer*—(1) *Applicability.* (i) These standards apply to:

(A) All discharges into the navigable waters of process wastes, and

(B) All discharges into the navigable waters of wastes containing benzidine from the manufacturing areas, loading and unloading areas, storage areas, and other areas subject to direct contamination by benzidine or benzidine-containing product as a result of the manufacturing process, including but not limited to:

(*1*) Stormwater and other runoff except as hereinafter provided in paragraph (b)(1)(ii) of this section, and

(*2*) Water used for routine cleanup or cleanup of spills.

(ii) These standards do not apply to stormwater runoff or other discharges from areas subject to contamination solely by fallout from air emissions of benzidine; or to stormwater runoff that exceeds that from the ten year 24-hour rainfall event.

(2) *Analytical method acceptable*—Environmental Protection Agency method specified in 40 CFR part 136.

(3) *Effluent standards*—(i) *Existing sources.* Discharges from a benzidine manufacturer shall not contain benzidine concentrations exceeding an average per working day of 10 μg/l calculated over any calendar month, and shall not exceed a monthly average daily loading of 0.130 kg/kkg of benzidine produced, and shall not exceed 50 μg/l in a sample(s) representing any working day.

(ii) *New sources.* Discharges from a benzidine manufacturer shall not contain benzidine concentrations exceeding an average per working day of 10 μg/l calculated over any calendar month, and shall not exceed a monthly average daily loading of 0.130 kg/kkg of benzidine produced, and shall not exceed 50 μg/l in a sample(s) representing any working day.

(4) The standards set forth in this paragraph (b) shall apply to the total combined weight or concentration of benzidine, excluding any associated element or compound.

(c) *Benzidine-based dye applicators*—(1) *Applicability.* (i) These standards apply to:

(A) All discharges into the navigable waters of process wastes, and

(B) All discharges into the navigable waters of wastes containing benzidine from the manufacturing areas, loading and unloading areas, storage areas, and other areas subject to direct contamination by benzidine or benzidine-containing product as a result of the manufacturing process, including but not limited to:

(*1*) Stormwater and other runoff except as hereinafter provided in paragraph (c)(1)(ii) of this section, and

(*2*) Water used for routine cleanup or cleanup of spills.

(ii) These standards do not apply to stormwater runoff or other discharges from areas subject to contamination solely by fallout from air emissions of benzidine; or to stormwater that exceeds that from the ten year 24-hour rainfall event.

(2) *Analytical method acceptable.* (i) Environmental Protection Agency method specified in 40 CFR part 136; or

(ii) Mass balance monitoring approach which requires the calculation of the benzidine concentration by dividing the total benzidine contained in dyes used during a working day (as certified in writing by the manufacturer)

by the total quantity of water discharged during the working day.

[*Comment*: The Regional Administrator (or State Director, if appropriate) shall rely entirely upon the method specified in 40 CFR part 136 in analyses performed by him for enforcement purposes.]

(3) *Effluent standards*—(i) *Existing sources.* Discharges from benzidine-based dye applicators shall not contain benzidine concentrations exceeding an average per working day of 10 μg/l calculated over any calendar month; and shall not exceed 25 μg/l in a sample(s) or calculation(s) representing any working day.

(ii) *New sources.* Discharges from benzidine-based dye applicators shall not contain benzidine concentrations exceeding an average per working day of 10 μg/l calculated over any calendar month; and shall not exceed 25 μg/l in a sample(s) or calculation(s) representing any working day.

(4) The standards set forth in this paragraph (c) shall apply to the total combined concentrations of benzidine, excluding any associated element or compound.

[42 FR 2620, Jan. 12, 1977]

§ 129.105 Polychlorinated biphenyls (PCBs).

(a) *Specialized definitions.* (1) *PCB Manufacturer* means a manufacturer who produces polychlorinated biphenyls.

(2) *Electrical capacitor manufacturer* means a manufacturer who produces or assembles electrical capacitors in which PCB or PCB-containing compounds are part of the dielectric.

(3) *Electrical transformer manufacturer* means a manufacturer who produces or assembles electrical transformers in which PCB or PCB-containing compounds are part of the dielectric.

(4) The ambient water criterion for PCBs in navigable waters is 0.001 μg/l.

(b) *PCB manufacturer*—(1) *Applicability.* (i) These standards or prohibitions apply to:

(A) All discharges of process wastes;

(B) All discharges from the manufacturing or incinerator areas, loading and unloading areas, storage areas, and other areas which are subject to direct contamination by PCBs as a result of the manufacturing process, including but not limited to:

(*1*) Stormwater and other runoff except as hereinafter provided in paragraph (b)(1)(ii) of this section; and

(*2*) Water used for routine cleanup or cleanup of spills.

(ii) These standards do not apply to stormwater runoff or other discharges from areas subject to contamination solely by fallout from air emissions of PCBs; or to stormwater runoff that exceeds that from the ten-year 24-hour rainfall event.

(2) Analytical Method Acceptable—Environmental Protection Agency method specified in 40 CFR part 136 except that a 1-liter sample size is required to increase analytical sensitivity.

(3) *Effluent standards*—(i) *Existing sources.* PCBs are prohibited in any discharge from any PCB manufacturer;

(ii) *New sources.* PCBs are prohibited in any discharge from any PCB manufacturer.

(c) *Electrical capacitor manufacturer*—(1) *Applicability.* (i) These standards or prohibitions apply to:

(A) All discharges of process wastes; and

(B) All discharges from the manufacturing or incineration areas, loading and unloading areas, storage areas and other areas which are subject to direct contamination by PCBs as a result of the manufacturing process, including but not limited to:

(*1*) Stormwater and other runoff except as hereinafter provided in paragraph (c)(1)(ii) of this section; and

(*2*) Water used for routine cleanup or cleanup of spills.

(ii) These standards do not apply to stormwater runoff or other discharges from areas subject to contamination solely by fallout from air emissions of PCBs; or to stormwater runoff that exceeds that from the ten-year 24-hour rainfall event.

(2) *Analytical method acceptable.* Environmental Protection Agency method specified in 40 CFR part 136, except that a 1-liter sample size is required to increase analytical sensitivity.

(3) *Effluent standards*—(i) *Existing sources.* PCBs are prohibited in any discharge from any electrical capacitor manufacturer;

(ii) *New sources.* PCBs are prohibited in any discharge from any electrical capacitor manufacturer.

(d) *Electrical transformer manufacturer*—(1) *Applicability.* (i) These standards or prohibitions apply to:

(A) All discharges of process wastes; and

(B) All discharges from the manufacturing or incineration areas, loading and unloading areas, storage areas, and other areas which are subject to direct contamination by PCBs as a result of the manufacturing process, including but not limited to:

(*1*) Stormwater and other runoff except as hereinafter provided in paragraph (d)(1)(ii) of this section; and

(*2*) Water used for routine cleanup or cleanup of spills.

(ii) These standards do not apply to stormwater runoff or other discharges from areas subject to contamination solely by fallout from air emissions of PCBs; or to stormwater runoff that exceeds that from the ten-year 24-hour rainfall event.

(2) *Analytical method acceptable.* Environmental Protection Agency method specified in 40 CFR part 136, except that a 1-liter sample size is required to increase analytical sensitivity.

(3) *Effluent standards*—(i) *Existing sources.* PCBs are prohibited in any discharge from any electrical transformer manufacturer;

(ii) *New sources.* PCBs are prohibited in any discharge from any electrical transformer manufacturer.

(e) *Adjustment of effluent standard for presence of PCBs in intake water.* Whenever a facility which is subject to these standards has PCBs in its effluent which result from the presence of PCBs in its intake waters, the owner may apply to the Regional Administrator (or State Director, if appropriate), for a credit pursuant to the provisions of §129.6, where the source of the water supply is the same body of water into which the discharge is made. The requirement of paragraph (1) of §129.6(a), relating to the source of the water supply, shall be waived, and such facility shall be eligible to apply for a credit under §129.6, upon a showing by the owner or operator of such facility to the Regional Administrator (or State Director, if appropriate) that the concentration of PCBs in the intake water supply of such facility does not exceed the concentration of PCBs in the receiving water body to which the plant discharges its effluent.

[42 FR 6555, Feb. 2, 1977]

PART 130—WATER QUALITY PLANNING AND MANAGEMENT

Sec.
130.0 Program summary and purpose.
130.1 Applicability.
130.2 Definitions.
130.3 Water quality standards.
130.4 Water quality monitoring.
130.5 Continuing planning process.
130.6 Water quality management plans.
130.7 Total maximum daily loads (TMDL) and individual water quality-based effluent limitations.
130.8 Water quality report.
130.9 Designation and de-designation.
130.10 State submittals to EPA.
130.11 Program management.
130.12 Coordination with other programs.
130.15 Processing application for Indian tribes.

AUTHORITY: 33 U.S.C. 1251 *et seq.*

SOURCE: 50 FR 1779, Jan. 11, 1985, unless otherwise noted.

§130.0 Program summary and purpose.

(a) This subpart establishes policies and program requirements for water quality planning, management and implementation under sections 106, 205(j), non-construction management 205(g), 208, 303 and 305 of the Clean Water Act. The Water Quality Management (WQM) process described in the Act and in this regulation provides the authority for a consistent national approach for maintaining, improving and protecting water quality while allowing States to implement the most effective individual programs. The process is implemented jointly by EPA, the States, interstate agencies, and areawide, local and regional planning organizations. This regulation explains the requirements of the Act, describes the relationships between the several components of the WQM process and outlines the roles of the major participants in the process. The components of the WQM process are discussed below.

(b) Water quality standards (WQS) are the State's goals for individual

water bodies and provide the legal basis for control decisions under the Act. Water quality monitoring activities provide the chemical, physical and biological data needed to determine the present quality of a State's waters and to identify the sources of pollutants in those waters. The primary assessment of the quality of a State's water is contained in its biennial Report to Congress required by section 305(b) of the Act.

(c) This report and other assessments of water quality are used in the State's WQM plans to identify priority water quality problems. These plans also contain the results of the State's analyses and management decisions which are necessary to control specific sources of pollution. The plans recommend control measures and designated management agencies (DMAs) to attain the goals established in the State's water quality standards.

(d) These control measures are implemented by issuing permits, building publicly-owned treatment works (POTWs), instituting best management practices for nonpoint sources of pollution and other means. After control measures are in place, the State evaluates the extent of the resulting improvements in water quality, conducts additional data gathering and planning to determine needed modifications in control measures and again institutes control measures.

(e) This process is a dynamic one, in which requirements and emphases vary over time. At present, States have completed WQM plans which are generally comprehensive in geographic and programmatic scope. Technology based controls are being implemented for most point sources of pollution. However, WQS have not been attained in many water bodies and are threatened in others.

(f) Present continuing planning requirements serve to identify these critical water bodies, develop plans for achieving higher levels of abatement and specify additional control measures. Consequently, this regulation reflects a programmatic emphasis on concentrating planning and abatement activities on priority water quality issues and geographic areas. EPA will focus its grant funds on activities designed to address these priorities. Annual work programs negotiated between EPA and State and interstate agencies will reflect this emphasis.

§ 130.1 Applicability.

(a) This subpart applies to all State, eligible Indian Tribe, interstate, areawide and regional and local CWA water quality planning and management activities undertaken on or after February 11, 1985 including all updates and continuing certifications for approved Water Quality Management (WQM) plans developed under sections 208 and 303 of the Act.

(b) Planning and management activities undertaken prior to February 11, 1985 are governed by the requirements of the regulations in effect at the time of the last grant award.

[50 FR 1779, Jan. 11, 1985, as amended at 54 FR 14359, Apr. 11, 1989; 59 FR 13817, Mar. 23, 1994]

§ 130.2 Definitions.

(a) *The Act.* The Clean Water Act, as amended, 33 U.S.C. 1251 *et seq.*

(b) *Indian Tribe.* Any Indian Tribe, band, group, or community recognized by the Secretary of the Interior and exercising governmental authority over a Federal Indian reservation.

(c) *Pollution.* The man-made or man-induced alteration of the chemical, physical, biological, and radiological integrity of water.

(d) *Water quality standards (WQS).* Provisions of State or Federal law which consist of a designated use or uses for the waters of the United States and water quality criteria for such waters based upon such uses. Water quality standards are to protect the public health or welfare, enhance the quality of water and serve the purposes of the Act.

(e) *Load or loading.* An amount of matter or thermal energy that is introduced into a receiving water; to introduce matter or thermal energy into a receiving water. Loading may be either man-caused (pollutant loading) or natural (natural background loading).

(f) *Loading capacity.* The greatest amount of loading that a water can receive without violating water quality standards.

(g) *Load allocation (LA).* The portion of a receiving water's loading capacity that is attributed either to one of its existing or future nonpoint sources of pollution or to natural background sources. Load allocations are best estimates of the loading, which may range from reasonably accurate estimates to gross allotments, depending on the availability of data and appropriate techniques for predicting the loading. Wherever possible, natural and nonpoint source loads should be distinguished.

(h) *Wasteload allocation (WLA).* The portion of a receiving water's loading capacity that is allocated to one of its existing or future point sources of pollution. WLAs constitute a type of water quality-based effluent limitation.

(i) *Total maximum daily load (TMDL).* The sum of the individual WLAs for point sources and LAs for nonpoint sources and natural background. If a receiving water has only one point source discharger, the TMDL is the sum of that point source WLA plus the LAs for any nonpoint sources of pollution and natural background sources, tributaries, or adjacent segments. TMDLs can be expressed in terms of either mass per time, toxicity, or other appropriate measure. If Best Management Practices (BMPs) or other nonpoint source pollution controls make more stringent load allocations practicable, then wasteload allocations can be made less stringent. Thus, the TMDL process provides for nonpoint source control tradeoffs.

(j) *Water quality limited segment.* Any segment where it is known that water quality does not meet applicable water quality standards, and/or is not expected to meet applicable water quality standards, even after the application of the technology-based effluent limitations required by sections 301(b) and 306 of the Act.

(k) *Water quality management (WQM) plan.* A State or areawide waste treatment management plan developed and updated in accordance with the provisions of sections 205(j), 208 and 303 of the Act and this regulation.

(l) *Areawide agency.* An agency designated under section 208 of the Act, which has responsibilities for WQM planning within a specified area of a State.

(m) *Best Management Practice (BMP).* Methods, measures or practices selected by an agency to meet its nonpoint source control needs. BMPs include but are not limited to structural and nonstructural controls and operation and maintenance procedures. BMPs can be applied before, during and after pollution-producing activities to reduce or eliminate the introduction of pollutants into receiving waters.

(n) *Designated management agency (DMA).* An agency identified by a WQM plan and designated by the Governor to implement specific control recommendations.

[50 FR 1779, Jan. 11, 1985, as amended at 54 FR 14359, Apr. 11, 1989]

§130.3 Water quality standards.

A water quality standard (WQS) defines the water quality goals of a water body, or portion thereof, by designating the use or uses to be made of the water and by setting criteria necessary to protect the uses. States and EPA adopt WQS to protect public health or welfare, enhance the quality of water and serve the purposes of the Clean Water Act (CWA). *Serve the purposes of Act* (as defined in sections 101(a)(2) and 303(c) of the Act) means that WQS should, wherever attainable, provide water quality for the protection and propagation of fish, shellfish and wildlife and for recreation in and on the water and take into consideration their use and value for public water supplies, propagation of fish, shellfish, wildlife, recreation in and on the water, and agricultural, industrial and other purposes including navigation.

Such standards serve the dual purposes of establishing the water quality goals for a specific water body and serving as the regulatory basis for establishment of water quality-based treatment controls and strategies beyond the technology-based level of treatment required by sections 301(b) and 306 of the Act. States shall review and revise WQS in accordance with applicable regulations and, as appropriate, update their Water Quality Management (WQM) plans to reflect such revisions. Specific WQS requirements are found in 40 CFR part 131.

§ 130.4 Water quality monitoring.

(a) In accordance with section 106(e)(1), States must establish appropriate monitoring methods and procedures (including biological monitoring) necessary to compile and analyze data on the quality of waters of the United States and, to the extent practicable, ground-waters. This requirement need not be met by Indian Tribes. However, any monitoring and/or analysis activities undertaken by a Tribe must be performed in accordance with EPA's quality assurance/quality control guidance.

(b) The State's water monitoring program shall include collection and analysis of physical, chemical and biological data and quality assurance and control programs to assure scientifically valid data. The uses of these data include determining abatement and control priorities; developing and reviewing water quality standards, total maximum daily loads, wasteload allocations and load allocations; assessing compliance with National Pollutant Discharge Elimination System (NPDES) permits by dischargers; reporting information to the public through the section 305(b) report and reviewing site-specific monitoring efforts.

[50 FR 1779, Jan. 11, 1985, as amended at 54 FR 14359, Apr. 11, 1989]

§ 130.5 Continuing planning process.

(a) *General.* Each State shall establish and maintain a continuing planning process (CPP) as described under section 303(e)(3)(A)—(H) of the Act. Each State is responsible for managing its water quality program to implement the processes specified in the continuing planning process. EPA is responsible for periodically reviewing the adequacy of the State's CPP.

(b) *Content.* The State may determine the format of its CPP as long as the mininum requirements of the CWA and this regulation are met. The following processes must be described in each State CPP, and the State may include other processes at its discretion.

(1) The process for developing effluent limitations and schedules of compliance at least as stringent as those required by sections 301(b) (1) and (2), 306 and 307, and at least stringent as any requirements contained in applicable water quality standards in effect under authority of section 303 of the Act.

(2) The process for incorporating elements of any applicable areawide waste treatment plans under section 208, and applicable basin plans under section 209 of the Act.

(3) The process for developing total maximum daily loads (TMDLs) and individual water quality based effluent limitations for pollutants in accordance with section 303(d) of the Act and § 130.7(a) of this regulation.

(4) The process for updating and maintaining Water Quality Management (WQM) plans, including schedules for revision.

(5) The process for assuring adequate authority for intergovernmental cooperation in the implementation of the State WQM program.

(6) The process for establishing and assuring adequate implementation of new or revised water quality standards, including schedules of compliance, under section 303(c) of the Act.

(7) The process for assuring adequate controls over the disposition of all residual waste from any water treatment processing.

(8) The process for developing an inventory and ranking, in order of priority of needs for construction of waste treatment works required to meet the applicable requirements of sections 301 and 302 of the Act.

(9) The process for determining the priority of permit issuance.

(c) *Regional Administrator review.* The Regional Administrator shall review approved State CPPs from time to time to ensure that the planning processes are consistent with the Act and this regulation. The Regional Administrator shall not approve any permit program under Title IV of the Act for any State which does not have an approved continuing planning process.

§ 130.6 Water quality management plans.

(a) *Water quality management (WQM) plans.* WQM plans consist of initial plans produced in accordance with sections 208 and 303(e) of the Act and certified and approved updates to those

plans. Continuing water quality planning shall be based upon WQM plans and water quality problems identified in the latest 305(b) reports. State water quality planning should focus annually on priority issues and geographic areas and on the development of water quality controls leading to implementation measures. Water quality planning directed at the removal of conditions placed on previously certified and approved WQM plans should focus on removal of conditions which will lead to control decisions.

(b) *Use of WQM plans.* WQM plans are used to direct implementation. WQM plans draw upon the water quality assessments to identify priority point and nonpoint water quality problems, consider alternative solutions and recommend control measures, including the financial and institutional measures necessary for implementing recommended solutions. State annual work programs shall be based upon the priority issues identified in the State WQM plan.

(c) *WQM plan elements.* Sections 205(j), 208 and 303 of the Act specify water quality planning requirements. The following plan elements shall be included in the WQM plan or referenced as part of the WQM plan if contained in separate documents when they are needed to address water quality problems.

(1) *Total maximum daily loads.* TMDLs in accordance with sections 303(d) and (e)(3)(C) of the Act and § 130.7 of this part.

(2) *Effluent limitations.* Effluent limitations including water quality based effluent limitations and schedules of compliance in accordance with section 303(e)(3)(A) of the Act and § 130.5 of this part.

(3) *Municipal and industrial waste treatment.* Identification of anticipated municipal and industrial waste treatment works, including facilities for treatment of stormwater-induced combined sewer overflows; programs to provide necessary financial arrangements for such works; establishment of construction priorities and schedules for initiation and completion of such treatment works including an identification of open space and recreation opportunities from improved water quality in accordance with section 208(b)(2) (A) and (B) of the Act.

(4) *Nonpoint source management and control.* (i) The plan shall describe the regulatory and non-regulatory programs, activities and Best Management Practices (BMPs) which the agency has selected as the means to control nonpoint source pollution where necessary to protect or achieve approved water uses. Economic, institutional, and technical factors shall be considered in a continuing process of identifying control needs and evaluating and modifying the BMPs as necessary to achieve water quality goals.

(ii) Regulatory programs shall be identified where they are determined to be necessary by the State to attain or maintain an approved water use or where non-regulatory approaches are inappropriate in accomplishing that objective.

(iii) BMPs shall be identified for the nonpoint sources identified in section 208(b)(2)(F)–(K) of the Act and other nonpoint sources as follows:

(A) *Residual waste.* Identification of a process to control the disposition of all residual waste in the area which could affect water quality in accordance with section 208(b)(2)(J) of the Act.

(B) *Land disposal.* Identification of a process to control the disposal of pollutants on land or in subsurface excavations to protect ground and surface water quality in accordance with section 208(b)(2)(K) of the Act.

(C) *Agricultural and silvicultural.* Identification of procedures to control agricultural and silvicultural sources of pollution in accordance with section 208(b)(2)(F) of the Act.

(D) *Mines.* Identification of procedures to control mine-related sources of pollution in accordance with section 208(b)(2)(G) of the Act.

(E) *Construction.* Identification of procedures to control construction related sources of pollution in accordance with section 208(b)(2)(H) of the Act.

(F) *Saltwater intrusion.* Identification of procedures to control saltwater intrusion in accordance with section 208(b)(2)(I) of the Act.

(G) *Urban stormwater.* Identification of BMPs for urban stormwater control

to achieve water quality goals and fiscal analysis of the necessary capital and operations and maintenance expenditures in accordance with section 208(b)(2)(A) of the Act.

(iv) The nonpoint source plan elements outlined in § 130.6(c) (4)(iii)(A)(G) of this regulation shall be the basis of water quality activities implemented through agreements or memoranda of understanding between EPA and other departments, agencies or instrumentalities of the United States in accordance with section 304(k) of the Act.

(5) *Management agencies.* Identification of agencies necessary to carry out the plan and provision for adequate authority for intergovernmental cooperation in accordance with sections 208(b)(2)(D) and 303(e)(3)(E) of the Act. Management agencies must demonstrate the legal, institutional, managerial and financial capability and specific activities necessary to carry out their responsibilities in accordance with section 208(c)(2)(A) through (I) of the Act.

(6) *Implementation measures.* Identification of implementation measures necessary to carry out the plan, including financing, the time needed to carry out the plan, and the economic, social and environmental impact of carrying out the plan in accordance with section 208(b)(2)(E).

(7) *Dredge or fill program.* Identification and development of programs for the control of dredge or fill material in accordance with section 208(b)(4)(B) of the Act.

(8) *Basin plans.* Identification of any relationship to applicable basin plans developed under section 209 of the Act.

(9) *Ground water.* Identification and development of programs for control of ground-water pollution including the provisions of section 208(b)(2)(K) of the Act. States are not required to develop ground-water WQM plan elements beyond the requirements of section 208(b)(2)(K) of the Act, but may develop a ground-water plan element if they determine it is necessary to address a ground-water quality problem. If a State chooses to develop a ground-water plan element, it should describe the essentials of a State program and should include, but is not limited to:

(i) Overall goals, policies and legislative authorities for protection of ground-water.

(ii) Monitoring and resource assessment programs in accordance with section 106(e)(1) of the Act.

(iii) Programs to control sources of contamination of ground-water including Federal programs delegated to the State and additional programs authorized in State statutes.

(iv) Procedures for coordination of ground-water protection programs among State agencies and with local and Federal agencies.

(v) Procedures for program management and administration including provision of program financing, training and technical assistance, public participation, and emergency management.

(d) *Indian Tribes.* An Indian Tribe is eligible for the purposes of this rule and the Clean Water Act assistance programs under 40 CFR part 35, subparts A and H if:

(1) The Indian Tribe has a governing body carrying out substantial governmental duties and powers;

(2) The functions to be exercised by the Indian Tribe pertain to the management and protection of water resources which are held by an Indian Tribe, held by the United States in trust for Indians, held by a member of an Indian Tribe if such property interest is subject to a trust restriction on alienation, or otherwise within the borders of an Indian reservation; and

(3) The Indian Tribe is reasonably expected to be capable, in the Regional Administrator's judgment, of carrying out the functions to be exercised in a manner consistent with the terms and purposes of the Clean Water Act and applicable regulations.

(e) *Update and certification.* State and/or areawide agency WQM plans shall be updated as needed to reflect changing water quality conditions, results of implementation actions, new requirements or to remove conditions in prior conditional or partial plan approvals. Regional Administrators may require that State WQM plans be updated as needed. State Continuing Planning Processes (CPPs) shall specify the process and schedule used to revise WQM plans. The State shall ensure

that State and areawide WQM plans together include all necessary plan elements and that such plans are consistent with one another. The Governor or the Governor's designee shall certify by letter to the Regional Administrator for EPA approval that WQM plan updates are consistent with all other parts of the plan. The certification may be contained in the annual State work program.

(f) *Consistency*. Construction grant and permit decisions must be made in accordance with certified and approved WQM plans as described in §§130.12(a) and 130.12(b).

[50 FR 1779, Jan. 11, 1985, as amended at 54 FR 14360, Apr. 11, 1989; 59 FR 13818, Mar. 23, 1994]

§130.7 Total maximum daily loads (TMDL) and individual water quality-based effluent limitations.

(a) *General*. The process for identifying water quality limited segments still requiring wasteload allocations, load allocations and total maximum daily loads (WLAs/LAs and TMDLs), setting priorities for developing these loads; establishing these loads for segments identified, including water quality monitoring, modeling, data analysis, calculation methods, and list of pollutants to be regulated; submitting the State's list of segments identified, priority ranking, and loads established (WLAs/LAs/TMDLs) to EPA for approval; incorporating the approved loads into the State's WQM plans and NPDES permits; and involving the public, affected dischargers, designated areawide agencies, and local governments in this process shall be clearly described in the State Continuing Planning Process (CPP).

(b) Identification and priority setting for water quality-limited segments still requiring TMDLs.

(1) Each State shall identify those water quality-limited segments still requiring TMDLs within its boundaries for which:

(i) Technology-based effluent limitations required by sections 301(b), 306, 307, or other sections of the Act;

(ii) More stringent effluent limitations (including prohibitions) required by either State or local authority preserved by section 510 of the Act, or Federal authority (law, regulation, or treaty); and

(iii) Other pollution control requirements (e.g., best management practices) required by local, State, or Federal authority are not stringent enough to implement any water quality standards (WQS) applicable to such waters.

(2) Each State shall also identify on the same list developed under paragraph (b)(1) of this section those water quality-limited segments still requiring TMDLs or parts thereof within its boundaries for which controls on thermal discharges under section 301 or State or local requirements are not stringent enough to assure protection and propagation of a balanced indigenous population of shellfish, fish and wildlife.

(3) For the purposes of listing waters under §130.7(b), the term ''water quality standard applicable to such waters'' and ''applicable water quality standards'' refer to those water quality standards established under section 303 of the Act, including numeric criteria, narrative criteria, waterbody uses, and antidegradation requirements.

(4) The list required under §§130.7(b)(1) and 130.7(b)(2) of this section shall include a priority ranking for all listed water quality-limited segments still requiring TMDLs, taking into account the severity of the pollution and the uses to be made of such waters and shall identify the pollutants causing or expected to cause violations of the applicable water quality standards. The priority ranking shall specifically include the identification of waters targeted for TMDL development in the next two years.

(5) Each State shall assemble and evaluate all existing and readily available water quality-related data and information to develop the list required by §§130.7(b)(1) and 130.7(b)(2). At a minimum ''all existing and readily available water quality-related data and information'' includes but is not limited to all of the existing and readily available data and information about the following categories of waters:

(i) Waters identified by the State in its most recent section 305(b) report as

''partially meeting'' or ''not meeting'' designated uses or as ''threatened'';

(ii) Waters for which dilution calculations or predictive models indicate nonattainment of applicable water quality standards;

(iii) Waters for which water quality problems have been reported by local, state, or federal agencies; members of the public; or academic institutions. These organizations and groups should be actively solicited for research they may be conducting or reporting. For example, university researchers, the United States Department of Agriculture, the National Oceanic and Atmospheric Administration, the United States Geological Survey, and the United States Fish and Wildlife Service are good sources of field data; and

(iv) Waters identified by the State as impaired or threatened in a nonpoint assessment submitted to EPA under section 319 of the CWA or in any updates of the assessment.

(6) Each State shall provide documentation to the Regional Administrator to support the State's determination to list or not to list its waters as required by §§ 130.7(b)(1) and 130.7(b)(2). This documentation shall be submitted to the Regional Administrator together with the list required by §§ 130.7(b)(1) and 130.7(b)(2) and shall include at a minimum:

(i) A description of the methodology used to develop the list; and

(ii) A description of the data and information used to identify waters, including a description of the data and information used by the State as required by § 130.7(b)(5); and

(iii) A rationale for any decision to not use any existing and readily available data and information for any one of the categories of waters as described in § 130.7(b)(5); and

(iv) Any other reasonable information requested by the Regional Administrator. Upon request by the Regional Administrator, each State must demonstrate good cause for not including a water or waters on the list. Good cause includes, but is not limited to, more recent or accurate data; more sophisticated water quality modeling; flaws in the original analysis that led to the water being listed in the categories in § 130.7(b)(5); or changes in conditions, e.g., new control equipment, or elimination of discharges.

(c) Development of TMDLs and individual water quality based effluent limitations.

(1) Each State shall establish TMDLs for the water quality limited segments identified in paragraph (b)(1) of this section, and in accordance with the priority ranking. For pollutants other than heat, TMDLs shall be established at levels necessary to attain and maintain the applicable narrative and numerical WQS with seasonal variations and a margin of safety which takes into account any lack of knowledge concerning the relationship between effluent limitations and water quality. Determinations of TMDLs shall take into account critical conditions for stream flow, loading, and water quality parameters.

(i) TMDLs may be established using a pollutant-by-pollutant or biomonitoring approach. In many cases both techniques may be needed. Site-specific information should be used wherever possible.

(ii) TMDLs shall be established for all pollutants preventing or expected to prevent attainment of water quality standards as identified pursuant to paragraph (b)(1) of this section. Calculations to establish TMDLs shall be subject to public review as defined in the State CPP.

(2) Each State shall estimate for the water quality limited segments still requiring TMDLs identified in paragraph (b)(2) of this section, the total maximum daily thermal load which cannot be exceeded in order to assure protection and propagation of a balanced, indigenous population of shellfish, fish and wildlife. Such estimates shall take into account the normal water temperatures, flow rates, seasonal variations, existing sources of heat input, and the dissipative capacity of the identified waters or parts thereof. Such estimates shall include a calculation of the maximum heat input that can be made into each such part and shall include a margin of safety which takes into account any lack of knowledge concerning the development of thermal water quality criteria for protection and propagation of a balanced, indigenous population of shellfish, fish and

wildlife in the identified waters or parts thereof.

(d) *Submission and EPA approval.* (1) Each State shall submit biennially to the Regional Administrator beginning in 1992 the list of waters, pollutants causing impairment, and the priority ranking including waters targeted for TMDL development within the next two years as required under paragraph (b) of this section. For the 1992 biennial submission, these lists are due no later than October 22, 1992. Thereafter, each State shall submit to EPA lists required under paragraph (b) of this section on April 1 of every even-numbered year. The list of waters may be submitted as part of the State's biennial water quality report required by §130.8 of this part and section 305(b) of the CWA or submitted under separate cover. All WLAs/LAs and TMDLs established under paragraph (c) for water quality limited segments shall continue to be submitted to EPA for review and approval. Schedules for submission of TMDLs shall be determined by the Regional Administrator and the State.

(2) The Regional Administrator shall either approve or disapprove such listing and loadings not later than 30 days after the date of submission. The Regional Administrator shall approve a list developed under §130.7(b) that is submitted after the effective date of this rule only if it meets the requirements of §130.7(b). If the Regional Administrator approves such listing and loadings, the State shall incorporate them into its current WQM plan. If the Regional Administrator disapproves such listing and loadings, he shall, not later than 30 days after the date of such disapproval, identify such waters in such State and establish such loads for such waters as determined necessary to implement applicable WQS. The Regional Administrator shall promptly issue a public notice seeking comment on such listing and loadings. After considering public comment and making any revisions he deems appropriate, the Regional Administrator shall transmit the listing and loads to the State, which shall incorporate them into its current WQM plan.

(e) For the specific purpose of developing information and as resources allow, each State shall identify all segments within its boundaries which it has not identified under paragraph (b) of this section and estimate for such waters the TMDLs with seasonal variations and margins of safety, for those pollutants which the Regional Administrator identifies under section 304(a)(2) as suitable for such calculation and for thermal discharges, at a level that would assure protection and propagation of a balanced indigenous population of fish, shellfish and wildlife. However, there is no requirement for such loads to be submitted to EPA for approval, and establishing TMDLs for those waters identified in paragraph (b) of this section shall be given higher priority.

[50 FR 1779, Jan. 11, 1985, as amended at 57 FR 33049, July 24, 1992]

§130.8 Water quality report.

(a) Each State shall prepare and submit biennially to the Regional Administrator a water quality report in accordance with section 305(b) of the Act. The water quality report serves as the primary assessment of State water quality. Based upon the water quality data and problems identified in the 305(b) report, States develop water quality management (WQM) plan elements to help direct all subsequent control activities. Water quality problems identified in the 305(b) report should be analyzed through water quality management planning leading to the development of alternative controls and procedures for problems identified in the latest 305(b) report. States may also use the 305(b) report to describe ground-water quality and to guide development of ground-water plans and programs. Water quality problems identified in the 305(b) report should be emphasized and reflected in the State's WQM plan and annual work program under sections 106 and 205(j) of the Clean Water Act.

(b) Each such report shall include but is not limited to the following:

(1) A description of the water quality of all waters of the United States and the extent to which the quality of waters provides for the protection and propagation of a balanced population of shellfish, fish, and wildlife and allows

recreational activities in and on the water.

(2) An estimate of the extent to which CWA control programs have improved water quality or will improve water quality for the purposes of paragraph (b)(1) of this section, and recommendations for future actions necessary and identifications of waters needing action.

(3) An estimate of the environmental, economic and social costs and benefits needed to achieve the objectives of the CWA and an estimate of the date of such achievement.

(4) A description of the nature and extent of nonpoint source pollution and recommendations of programs needed to control each category of nonpoint sources, including an estimate of implementation costs.

(5) An assessment of the water quality of all publicly owned lakes, including the status and trends of such water quality as specified in section 314(a)(1) of the Clean Water Act.

(c) States may include a description of the nature and extent of groundwater pollution and recommendations of State plans or programs needed to maintain or improve ground-water quality.

(d) In the years in which it is prepared the biennial section 305(b) report satisfies the requirement for the annual water quality report under section 205(j). In years when the 305(b) report is not required, the State may satisfy the annual section 205(j) report requirement by certifying that the most recently submitted section 305(b) report is current or by supplying an update of the sections of the most recently submitted section 305(b) report which require updating.

[50 FR 1779, Jan.11, 1985, as amended at 57 FR 33050, July 24, 1992]

§ 130.9 Designation and de-designation.

(a) *Designation*. Areawide planning agencies may be designated by the Governor in accordance with section 208(a) (2) and (3) of the Act or may self-designate in accordance with section 208(a)(4) of the Act. Such designations shall subject to EPA approval in accordance with section 208(a)(7) of the Act.

(b) *De-designation*. The Governor may modify or withdraw the planning designation of a designated planning agency other than an Indian tribal organization self-designated § 130.6(c)(2) if:

(1) The areawide agency requests such cancellation; or

(2) The areawide agency fails to meet its planning requirements as specified in grant agreements, contracts or memoranda of understanding; or

(3) The areawide agency no longer has the resources or the commitment to continue water quality planning activities within the designated boundaries.

(c) *Impact of de-designation*. Once an areawide planning agency's designation has been withdrawn the State agency shall assume direct responsibility for continued water quality planning and oversight of implementation within the area.

(d) *Designated management agencies (DMA)*. In accordance with section 208(c)(1) of the Act, management agencies shall be designated by the Governor in consultation with the designated planning agency. EPA shall approve such designations unless the DMA lacks the legal, financial and managerial authority required under section 208(c)(2) of the Act. Designated management agencies shall carry out responsibilities specified in Water Quality Management (WQM) plans. Areawide planning agencies shall monitor DMA activities in their area and recommend necessary plan changes during the WQM plan update. Where there is no designated areawide planning agency, States shall monitor DMA activities and make any necessary changes during the WQM plan update.

§ 130.10 State submittals to EPA.

(a) The following must be submitted regularly by the States to EPA:

(1) The section 305(b) report, in FY 84 and every two years thereafter, and the annual section 205(j) certification or update of the 305(b) water quality report; (Approved by OMB under the control number 2040–0071)

(2) The annual State work program(s) under sections 106 and 205(j) of the Act; and (Approved by OMB under the control number 2010–0004)

(3) Revisions or additions to water quality standards (WQS) (303(c)). (Approved by OMB under 2040–0049)

(b) The Act also requires that each State initially submit to EPA and revise as necessary the following:

(1) Continuing planning process (CPP) (303(e));

(2) Identification of water quality-limited waters still requiring TMDLs (section 303(d)), pollutants, and the priority ranking including waters targeted for TMDL development within the next two years as required under § 130.7(b) in accordance with the schedule set for in § 130.7(d)(1). (Approved by the Office of Management and Budget under control number 2040–0071)

(3) Total maximum daily loads (TMDLs) (303(d)); and

(4) Water quality management (WQM) plan and certified and approved WQM plan updates (208, 303(e)). (Paragraph (b)(1), (4) approved by OMB under the control number 2010–0004).

(c) The form and content of required State submittals to EPA may be tailored to reflect the organization and needs of the State, as long as the requirements and purposes of the Act, this part and, where applicable, 40 CFR parts 29, 30, 33 and 35, subparts A and J are met. The need for revision and schedule of submittals shall be agreed to annually with EPA as the States annual work program is developed.

(d) Not later than February 4, 1989, each State shall submit to EPA for review, approval, and implementation—

(1) A list of those waters within the State which after the application of effluent limitations required under section 301(b)(2) of the CWA cannot reasonably be anticipated to attain or maintain (i) water quality standards for such waters reviewed, revised, or adopted in accordance with section 303(c)(2)(B) of the CWA, due to toxic pollutants, or (ii) that water quality which shall assure protection of public health, public water supplies, agricultural and industrial uses, and the protection and propagation of a balanced population of shellfish, fish and wildlife, and allow recreational activities in and on the water;

(2) A list of all navigable waters in such State for which the State does not expect the applicable standard under section 303 of the CWA will be achieved after the requirements of sections 301(b), 306, and 307(b) are met, due entirely or substantially to discharges from point sources of any toxic pollutants listed pursuant to section 307(a);

(3) For each segment of navigable waters included on such lists, a determination of the specific point source discharging any such toxic pollutant which is believed to be preventing or impairing such water quality and the amount of each such toxic pollutant discharged by each such source. (Approved by the Office of Management and Budget under control number 2040-0152)

(4) For the purposes of listing waters under § 130.10(d)(2), *applicable standard* means a numeric criterion for a priority pollutant promulgated as part of a state water quality standard. Where a state numeric criterion for a priority pollutant is not promulgated as part of a state water quality standard, for the purposes of listing waters ''applicable standard'' means the state narrative water quality criterion to control a priority pollutant (e.g., no toxics in toxic amounts) interpreted on a chemical-by-chemical basis by applying a proposed state cirterion, an explicit state policy or regulation, or an EPA national water quality criterion, supplemented with other relevant information.

(5) If a water meets either of the two conditions listed below the water must be listed under § 130.10(d)(2) on the grounds that the applicable standard is not achieved or expected to be achieved due entirely or substantially to discharges from point sources.

(i) Existing or additional water quality-based limits on one or more point sources would result in the achievement of an applicable water quality standard for a toxic pollutant; or

(ii) The discharge of a toxic pollutant from one or more point sources, regardless of any nonpoint source contribution of the same pollutant, is sufficient to cause or is expected to cause an excursion above the applicable water quality standard for the toxic pollutant.

(6) Each state shall assemble and evaluate all existing and readily available water quality-related data and information and each state shall develop the lists required by paragraphs (d)(1), (2), and (3) of this section based upon this data and information. At a minimum, all existing and readily available water quality-related data and information includes, but is not limited to, all of the existing and readily available data about the following categories of waters in the state:

(i) Waters where fishing or shellfish bans and/or advisories are currently in effect or are anticipated.

(ii) Waters where there have been repeated fishkills or where abnormalities (cancers, lesions, tumors, etc.) have been observed in fish or other aquatic life during the last ten years.

(iii) Waters where there are restrictions on water sports or recreational contact.

(iv) Waters identified by the state in its most recent state section 305(b) report as either ''partially achieving'' or ''not achieving'' designated uses.

(v) Waters identified by the states under section 303(d) of the CWA as waters needing water quality-based controls.

(vi) Waters identified by the state as priority waterbodies. (State Water Quality Management plans often include priority waterbody lists which are those waters that most need water pollution control decisions to achieve water quality standards or goals.)

(vii) Waters where ambient data indicate potential or actual exceedances of water quality criteria due to toxic pollutants from an industry classified as a primary industry in appendix A of 40 CFR part 122.

(viii) Waters for which effluent toxicity test results indicate possible or actual exceedances of state water quality standards, including narrative ''free from'' water quality criteria or EPA water quality criteria where state criteria are not available.

(ix) Waters with primary industrial major dischargers where dilution analyses indicate exceedances of state narrative or numeric water quality criteria (or EPA water quality criteria where state standards are not available) for toxic pollutants, ammonia, or chlorine. These dilution analyses must be based on estimates of discharge levels derived from effluent guidelines development documents, NPDES permits or permit application data (e.g., Form 2C), Discharge Monitoring Reports (DMRs), or other available information.

(x) Waters with POTW dischargers requiring local pretreatment programs where dilution analyses indicate exceedances of state water quality criteria (or EPA water quality criteria where state water quality criteria are not available) for toxic pollutants, ammonia, or chlorine. These dilution analyses must be based upon data from NPDES permits or permit applications (e.g., Form 2C), Discharge Monitoring Reports (DMRs), or other available information.

(xi) Waters with facilities not included in the previous two categories such as major POTWs, and industrial minor dischargers where dilution analyses indicate exceedances of numeric or narrative state water quality criteria (or EPA water quality criteria where state water quality criteria are not available) for toxic pollutants, ammonia, or chlorine. These dilution analyses must be based upon estimates of discharge levels derived from effluent guideline development documents, NPDES permits or permit application data, Discharge Monitoring Reports (DMRs), or other available information.

(xii) Waters classified for uses that will not support the ''fishable/swimmable'' goals of the Clean Water Act.

(xiii) Waters where ambient toxicity or adverse water quality conditions have been reported by local, state, EPA or other Federal Agencies, the private sector, public interest groups, or universities. These organizations and groups should be actively solicited for research they may be conducting or reporting. For example, university researchers, the United States Department of Agriculture, the National Oceanic and Atmospheric Administration, the United States Geological Survey, and the United States Fish and Wildlife Service are good sources of field data and research.

(xiv) Waters identified by the state as impaired in its most recent Clean Lake

Assessments conducted under section 314 of the Clean Water Act.

(xv) Waters identified as impaired by nonpoint sources in the *America's Clean Water: The States' Nonpoint Source Assessments* 1985 (Association of State and Interstate Water Pollution Control Administrators (ASIWPCA)) or waters identified as impaired or threatened in a nonpoint source assessment submitted by the state to EPA under section 319 of the Clean Water Act.

(xvi) Surface waters impaired by pollutants from hazardous waste sites on the National Priority List prepared under section 105(8)(A) of CERCLA.

(7) Each state shall provide documentation to the Regional Administrator to support the state's determination to list or not to list waters as required by paragraphs (d)(1), (d)(2) and (d)(3) of this section. This documentation shall be submitted to the Regional Administrator together with the lists required by paragraphs (d)(1), (d)(2), and (d)(3) of this section and shall include as a minimum:

(i) A description of the methodology used to develop each list;

(ii) A description of the data and information used to identify waters and sources including a description of the data and information used by the state as required by paragraph (d)(6) of this section;

(iii) A rationale for any decision not to use any one of the categories of existing and readily available data required by paragraph (d)(6) of this section; and

(iv) Any other information requested by the Regional Administrator that is reasonable or necessary to determine the adequacy of a state's lists. Upon request by the Regional Administrator, each state must demonstrate good cause for not including a water or waters on one or more lists. Good cause includes, but is not limited to, more recent or accurate data; more accurate water quality modeling; flaws in the original analysis that led to the water being identified in a category in § 130.10(d)(6); or changes in conditions, e.g., new control equipment, or elimination of discharges.

(8) The Regional Administrator shall approve or disapprove each list required by paragraphs (d)(1), (d)(2), and (d)(3) of this section no later than June 4, 1989. The Regional Administrator shall approve each list required under paragraphs (d)(1), (d)(2), and (d)(3) of this section only if it meets the regulatory requirements for listing under paragraphs (d)(1), (d)(2), and (d)(3) of this section and if the state has met all the requirements of paragraphs (d)(6) and (d)(7) of this section.

(9) If a state fails to submit lists in accordance with paragraph (d) of this section or the Regional Administrator does not approve the lists submitted by such state in accordance with this paragraph, then not later than June 4, 1990, the Regional Administrator, in cooperation with such state, shall implement the requirements of CWA section 304(l) (1) and (2) in such state.

(10) If the Regional Administrator disapproves a state's decision with respect to one or more of the waters required under paragraph (d) (1), (2), or (3) of this section, or one or more of the individual control strategies required pursuant to section 304(l)(1)(D), then not later than June 4, 1989, the Regional Administrator shall distribute the notice of approval or disapproval given under this paragraph to the appropriate state Director. The Regional Administrator shall also publish a notice of availability, in a daily or weekly newspaper with state-wide circulation or in the FEDERAL REGISTER, for the notice of approval or disapproval. The Regional Administrator shall also provide written notice to each discharger identified under section 304(l)(1)(C), that EPA has listed the discharger under section 304(l)(1)(C). The notice of approval and disapproval shall include the following:

(i) The name and address of the EPA office that reviews the state's submittals.

(ii) A brief description of the section 304(l) process.

(iii) A list of waters, point sources and pollutants disapproved under this paragraph.

(iv) If the Regional Administrator determines that a state did not provide

adequate public notice and an opportunity to comment on the lists prepared under this section, or if the Regional Administrator chooses to exercise his or her discretion, a list of waters, point sources, or pollutants approved under this paragraph.

(v) The name, address, and telephone number of the person at the Regional Office from whom interested persons may obtain more information.

(vi) Notice that written petitions or comments are due within 120 days.

(11) As soon as practicable, but not later than June 4, 1990, the Regional Office shall issue a response to petitions or comments received under paragraph (d)(10) of this section. Notice shall be given in the same manner as notice described in paragraph (d)(10) of this section, except for the following changes to the notice of approvals and disapprovals:

(i) The lists of waters, point sources and pollutants must reflect any changes made pursuant to comments or petitions received.

(ii) A brief description of the subsequent steps in the section 304(l) process shall be included.

[50 FR 1779, Jan. 11, 1985, as amended at 54 FR 258, Jan. 4, 1989; 54 FR 23897, June 2, 1989; 57 FR 33050, July 24, 1992]

§ 130.11 Program management.

(a) State agencies may apply for grants under sections 106, 205(j) and 205(g) to carry out water quality planning and management activities. Interstate agencies may apply for grants under section 106 to carry out water quality planning and management activities. Local or regional planning organizations may request 106 and 205(j) funds from a State for planning and management activities. Grant administrative requirements for these funds appear in 40 CFR parts 25, 29, 30, 33 and 35, subparts A and J.

(b) Grants under section 106 may be used to fund a wide range of activities, including but not limited to assessments of water quality, revision of water quality standards (WQS), development of alternative approaches to control pollution, implementation and enforcement of control measures and development or implementation of ground water programs. Grants under section 205(j) may be used to fund water quality management (WQM) planning activities but may not be used to fund implementation of control measures (see part 35, subpart A). Section 205(g) funds are used primarily to manage the wastewater treatment works construction grants program pursuant to the provisions of 40 CFR part 35, subpart J. A State may also use part of the 205(g) funds to administer approved permit programs under sections 402 and 404, to administer a statewide waste treatment management program under section 208(b)(4) and to manage waste treatment construction grants for small communities.

(c) Grant work programs for water quality planning and management shall describe geographic and functional priorities for use of grant funds in a manner which will facilitate EPA review of the grant application and subsequent evaluation of work accomplished with the grant funds. A State's 305(b) Report, WQM plan and other water quality assessments shall identify the State's priority water quality problems and areas. The WQM plan shall contain an analysis of alternative control measures and recommendations to control specific problems. Work programs shall specify the activities to be carried out during the period of the grant; the cost of specific activities; the outputs, for example, permits issued, intensive surveys, wasteload allocations, to be produced by each activity; and where applicable, schedules indicating when activities are to be completed.

(d) State work programs under sections 106, 205(j) and 205(g) shall be coordinated in a manner which indicates the funding from these grants dedicated to major functions, such as permitting, enforcement, monitoring, planning and standards, nonpoint source implementation, management of construction grants, operation and maintenance of treatment works, ground-water, emergency response and program management. States shall also describe how the activities funded by these grants are used in a coordinated manner to address the

priority water quality problems identified in the State's water quality assessment under section 305(b).

(e) EPA, States, areawide agencies, interstate agencies, local and Regional governments, and designated management agencies (DMAs) are joint participants in the water pollution control program. States may enter into contractual arrangements or intergovernmental agreements with other agencies concerning the performance of water quality planning and management tasks. Such arrangements shall reflect the capabilities of the respective agencies and shall efficiently utilize available funds and funding eligibilities to meet Federal requirements commensurate with State and local priorities. State work programs under section 205(j) shall be developed jointly with local, Regional and other comprehensive planning organizations.

§130.12 Coordination with other programs.

(a) Relationship to the National Pollutant Discharge Elimination System (NPDES) program. In accordance with section 208(e) of the Act, no NPDES permit may be issued which is in conflict with an approved Water Quality Management (WQM) plan. Where a State has assumed responsibility for the administration of the permit program under section 402, it shall assure consistency with the WQM plan.

(b) Relationship to the municipal construction grants program. In accordance with sections 205(j), 216 and 303(e)(3)(H) of the Act, each State shall develop a system for setting priorities for funding construction of municipal wastewater treatment facilities under section 201 of the Act. The State, or the agency to which the State has delegated WQM planning functions, shall review each facility plan in its area for consistency with the approved WQM plan. Under section 208(d) of the Act, after a waste treatment management agency has been designated and a WQM plan approved, section 201 construction grant funds may be awarded only to those agencies for construction of treatment works in conformity with the approved WQM plan.

(c) Relationship to Federal activities—Each department, agency or instrumentality of the executive, legislative and judicial branches of the Federal Government having jurisdiction over any property or facility or engaged in any activity resulting, or which may result, in the discharge or runoff of pollutants shall comply with all Federal, State, interstate and local requirements, administrative authority, and process and sanctions respecting the control and abatement of water pollution in the same manner and extent as any non-governmental entity in accordance with section 313 of the CWA.

§130.15 Processing application for Indian tribes.

The Regional Administrator shall process an application of an Indian Tribe submitted under §130.6(d) in a timely manner. He shall promptly notify the Indian Tribe of receipt of the application.

[54 FR 14360, Apr. 11, 1989, as amended at 59 FR 13818, Mar. 23, 1994]

PART 131—WATER QUALITY STANDARDS

Subpart A—General Provisions

Sec.
131.1 Scope.
131.2 Purpose.
131.3 Definitions.
131.4 State authority.
131.5 EPA authority.
131.6 Minimum requirements for water quality standards submission.
131.7 Dispute resolution mechanism.
131.8 Requirements for Indian Tribes to administer a water quality standards program.

Subpart B—Establishment of Water Quality Standards

131.10 Designation of uses.
131.11 Criteria.
131.12 Antidegradation policy.
131.13 General policies.

Subpart C—Procedures for Review and Revision of Water Quality Standards

131.20 State review and revision of water quality standards.
131.21 EPA review and approval of water quality standards.
131.22 EPA promulgation of water quality standards.

Subpart D—Federally Promulgated Water Quality Standards

131.31 Arizona.
131.32 Pennsylvania.
131.33–131.34 [Reserved]
131.35 Colville Confederated Tribes Indian Reservation.
131.36 Toxics criteria for those states not complying with Clean Water Act section 303(c)(2)(B).
131.37 California.

AUTHORITY: 33 U.S.C. 1251 *et seq.*

SOURCE: 48 FR 51405, Nov. 8, 1983, unless otherwise noted.

Subpart A—General Provisions

§ 131.1 Scope.

This part describes the requirements and procedures for developing, reviewing, revising, and approving water quality standards by the States as authorized by section 303(c) of the Clean Water Act. Additional specific procedures for developing, reviewing, revising, and approving water quality standards for Great Lakes States or Great Lakes Tribes (as defined in 40 CFR 132.2) to conform to section 118 of the Clean Water Act and 40 CFR part 132, are provided in 40 CFR part 132.

[60 FR 15386, Mar. 23, 1995]

§ 131.2 Purpose.

A water quality standard defines the water quality goals of a water body, or portion thereof, by designating the use or uses to be made of the water and by setting criteria necessary to protect the uses. States adopt water quality standards to protect public health or welfare, enhance the quality of water and serve the purposes of the Clean Water Act (the Act). ''Serve the purposes of the Act'' (as defined in sections 101(a)(2) and 303(c) of the Act) means that water quality standards should, wherever attainable, provide water quality for the protection and propagation of fish, shellfish and wildlife and for recreation in and on the water and take into consideration their use and value of public water supplies, propagation of fish, shellfish, and wildlife, recreation in and on the water, and agricultural, industrial, and other purposes including navigation. Such standards serve the dual purposes of establishing the water quality goals for a specific water body and serve as the regulatory basis for the establishment of water-quality-based treatment controls and strategies beyond the technology-based levels of treatment required by sections 301(b) and 306 of the Act.

§ 131.3 Definitions.

(a) *The Act* means the Clean Water Act (Pub. L. 92–500, as amended (33 U.S.C. 1251 *et seq.*)).

(b) *Criteria* are elements of State water quality standards, expressed as constituent concentrations, levels, or narrative statements, representing a quality of water that supports a particular use. When criteria are met, water quality will generally protect the designated use.

(c) *Section 304(a) criteria* are developed by EPA under authority of section 304(a) of the Act based on the latest scientific information on the relationship that the effect of a constituent concentration has on particular aquatic species and/or human health. This information is issued periodically to the States as guidance for use in developing criteria.

(d) *Toxic pollutants* are those pollutants listed by the Administrator under section 307(a) of the Act.

(e) *Existing uses* are those uses actually attained in the water body on or after November 28, 1975, whether or not they are included in the water quality standards.

(f) *Designated uses* are those uses specified in water quality standards for each water body or segment whether or not they are being attained.

(g) *Use attainability analysis* is a structured scientific assessment of the factors affecting the attainment of the use which may include physical, chemical, biological, and economic factors as described in § 131.10(g).

(h) *Water quality limited segment* means any segment where it is known that water quality does not meet applicable water quality standards, and/or is not expected to meet applicable water quality standards, even after the application of the technology-bases effluent limitations required by sections 301(b) and 306 of the Act.

(i) *Water quality standards* are provisions of State or Federal law which consist of a designated use or uses for the waters of the United States and water quality criteria for such waters based upon such uses. Water quality standards are to protect the public health or welfare, enhance the quality of water and serve the purposes of the Act.

(j) *States* include: The 50 States, the District of Columbia, Guam, the Commonwealth of Puerto Rico, Virgin Islands, American Samoa, the Trust Territory of the Pacific Islands, the Commonwealth of the Northern Mariana Islands, and Indian Tribes that EPA determines to be eligible for purposes of water quality standards program.

(k) *Federal Indian Reservation, Indian Reservation,* or *Reservation* means all land within the limits of any Indian reservation under the jurisdiction of the United States Government, notwithstanding the issuance of any patent, and including rights-of-way running through the reservation.''

(l) *Indian Tribe* or *Tribe* means any Indian Tribe, band, group, or community recognized by the Secretary of the Interior and exercising governmental authority over a Federal Indian reservation.

[48 FR 51405, Nov. 8, 1983, as amended at 56 FR 64893, Dec. 12, 1991; 59 FR 64344, Dec. 14, 1994]

§131.4 State authority.

(a) States (as defined in §131.3) are responsible for reviewing, establishing, and revising water quality standards. As recognized by section 510 of the Clean Water Act, States may develop water quality standards more stringent than required by this regulation. Consistent with section 101(g) and 518(a) of the Clean Water Act, water quality standards shall not be construed to supersede or abrogate rights to quantities of water.

(b) States (as defined in §131.3) may issue certifications pursuant to the requirements of Clean Water Act section 401. Revisions adopted by States shall be applicable for use in issuing State certifications consistent with the provisions of §131.21(c).

(c) Where EPA determines that a Tribe is eligible to the same extent as a State for purposes of water quality standards, the Tribe likewise is eligible to the same extent as a State for purposes of certifications conducted under Clean Water Act section 401.

[56 FR 64893, Dec. 12, 1991, as amended at 59 FR 64344, Dec. 14, 1994]

§131.5 EPA authority.

(a) Under section 303(c) of the Act, EPA is to review and to approve or disapprove State-adopted water quality standards. The review involves a determination of:

(1) Whether the State has adopted water uses which are consistent with the requirements of the Clean Water Act;

(2) Whether the State has adopted criteria that protect the designated water uses;

(3) Whether the State has followed its legal procedures for revising or adopting standards;

(4) Whether the State standards which do not include the uses specified in section 101(a)(2) of the Act are based upon appropriate technical and scientific data and analyses, and

(5) Whether the State submission meets the requirements included in §131.6 of this part and, for Great Lakes States or Great Lakes Tribes (as defined in 40 CFR 132.2) to conform to section 118 of the Act, the requirements of 40 CFR part 132.

(b) If EPA determines that the State's or Tribe's water quality standards are consistent with the factors listed in paragraphs (a)(1) through (a)(5) of this section, EPA approves the standards. EPA must disapprove the State's or Tribe's water quality standards and promulgate Federal standards under section 303(c)(4), and for Great Lakes States or Great Lakes Tribes under section 118(c)(2)(C) of the Act, if State or Tribal adopted standards are not consistent with the factors listed in paragraphs (a)(1) through (a)(5) of this section. EPA may also promulgate a new or revised standard when necessary to meet the requirements of the Act.

(c) Section 401 of the Clean Water Act authorizes EPA to issue certifications pursuant to the requirements of section 401 in any case where a State or

interstate agency has no authority for issuing such certifications.

[48 FR 51405, Nov. 8, 1983, as amended at 56 FR 64894, Dec. 12, 1991; 60 FR 15387, Mar. 23, 1995]

§ 131.6 Minimum requirements for water quality standards submission.

The following elements must be included in each State's water quality standards submitted to EPA for review:

(a) Use designations consistent with the provisions of sections 101(a)(2) and 303(c)(2) of the Act.

(b) Methods used and analyses conducted to support water quality standards revisions.

(c) Water quality criteria sufficient to protect the designated uses.

(d) An antidegradation policy consistent with § 131.12.

(e) Certification by the State Attorney General or other appropriate legal authority within the State that the water quality standards were duly adopted pursuant to State law.

(f) General information which will aid the Agency in determining the adequacy of the scientific basis of the standards which do not include the uses specified in section 101(a)(2) of the Act as well as information on general policies applicable to State standards which may affect their application and implementation.

§ 131.7 Dispute resolution mechanism.

(a) Where disputes between States and Indian Tribes arise as a result of differing water quality standards on common bodies of water, the lead EPA Regional Administrator, as determined based upon OMB circular A–105, shall be responsible for acting in accordance with the provisions of this section.

(b) The Regional Administrator shall attempt to resolve such disputes where:

(1) The difference in water quality standards results in unreasonable consequences;

(2) The dispute is between a State (as defined in § 131.3(j) but exclusive of all Indian Tribes) and a Tribe which EPA has determined is eligible to the same extent as a State for purposes of water quality standards;

(3) A reasonable effort to resolve the dispute without EPA involvement has been made;

(4) The requested relief is consistent with the provisions of the Clean Water Act and other relevant law;

(5) The differing State and Tribal water quality standards have been adopted pursuant to State and Tribal law and approved by EPA; and

(6) A valid written request has been submitted by either the Tribe or the State.

(c) Either a State or a Tribe may request EPA to resolve any dispute which satisfies the criteria of paragraph (b) of this section. Written requests for EPA involvement should be submitted to the lead Regional Administrator and must include:

(1) A concise statement of the unreasonable consequences that are alleged to have arisen because of differing water quality standards;

(2) A concise description of the actions which have been taken to resolve the dispute without EPA involvement;

(3) A concise indication of the water quality standards provision which has resulted in the alleged unreasonable consequences;

(4) Factual data to support the alleged unreasonable consequences; and

(5) A statement of the relief sought from the alleged unreasonable consequences.

(d) Where, in the Regional Administrator's judgment, EPA involvement is appropriate based on the factors of paragraph (b) of this section, the Regional Administrator shall, within 30 days, notify the parties in writing that he/she is initiating an EPA dispute resolution action and solicit their written response. The Regional Administrator shall also make reasonable efforts to ensure that other interested individuals or groups have notice of this action. Such efforts shall include but not be limited to the following:

(1) Written notice to responsible Tribal and State Agencies, and other affected Federal agencies,

(2) Notice to the specific individual or entity that is alleging that an unreasonable consequence is resulting from differing standards having been adopted on a common body of water,

(3) Public notice in local newspapers, radio, and television, as appropriate,

(4) Publication in trade journal newsletters, and

(5) Other means as appropriate.

(e) If in accordance with applicable State and Tribal law an Indian Tribe and State have entered into an agreement that resolves the dispute or establishes a mechanism for resolving a dispute, EPA shall defer to this agreement where it is consistent with the Clean Water Act and where it has been approved by EPA.

(f) EPA dispute resolution actions shall be consistent with one or a combination of the following options:

(1) *Mediation*. The Regional Administrator may appoint a mediator to mediate the dispute. Mediators shall be EPA employees, employees from other Federal agencies, or other individuals with appropriate qualifications.

(i) Where the State and Tribe agree to participate in the dispute resolution process, mediation with the intent to establish Tribal-State agreements, consistent with Clean Water Act section 518(d), shall normally be pursued as a first effort.

(ii) Mediators shall act as neutral facilitators whose function is to encourage communication and negotiation between all parties to the dispute.

(iii) Mediators may establish advisory panels, to consist in part of representatives from the affected parties, to study the problem and recommend an appropriate solution.

(iv) The procedure and schedule for mediation of individual disputes shall be determined by the mediator in consultation with the parties.

(v) If formal public hearings are held in connection with the actions taken under this paragraph, Agency requirements at 40 CFR 25.5 shall be followed.

(2) *Arbitration*. Where the parties to the dispute agree to participate in the dispute resolution process, the Regional Administrator may appoint an arbitrator or arbitration panel to arbitrate the dispute. Arbitrators and panel members shall be EPA employees, employees from other Federal agencies, or other individuals with appropriate qualifications. The Regional administrator shall select as arbitrators and arbitration panel members individuals who are agreeable to all parties, are knowledgeable concerning the requirements of the water quality standards program, have a basic understanding of the political and economic interests of Tribes and States involved, and are expected to fulfill the duties fairly and impartially.

(i) The arbitrator or arbitration panel shall conduct one or more private or public meetings with the parties and actively solicit information pertaining to the effects of differing water quality permit requirements on upstream and downstream dischargers, comparative risks to public health and the environment, economic impacts, present and historical water uses, the quality of the waters subject to such standards, and other factors relevant to the dispute, such as whether proposed water quality criteria are more stringent than necessary to support designated uses, more stringent than natural background water quality or whether designated uses are reasonable given natural background water quality.

(ii) Following consideration of relevant factors as defined in paragraph (f)(2)(i) of this section, the arbitrator or arbitration panel shall have the authority and responsibility to provide all parties and the Regional Administrator with a written recommendation for resolution of the dispute. Arbitration panel recommendations shall, in general, be reached by majority vote. However, where the parties agree to binding arbitration, or where required by the Regional Administrator, recommendations of such arbitration panels may be unanimous decisions. Where binding or non-binding arbitration panels cannot reach a unanimous recommendation after a reasonable period of time, the Regional Administrator may direct the panel to issue a non-binding decision by majority vote.

(iii) The arbitrator or arbitration panel members may consult with EPA's Office of General Counsel on legal issues, but otherwise shall have no *ex parte* communications pertaining to the dispute. Federal employees who are arbitrators or arbitration panel members shall be neutral and shall not be predisposed for or against the position of any disputing party based on

any Federal Trust responsibilities which their employers may have with respect to the Tribe. In addition, arbitrators or arbitration panel members who are Federal employees shall act independently from the normal hierarchy within their agency.

(iv) The parties are not obligated to abide by the arbitrator's or arbitration panel's recommendation unless they voluntarily entered into a binding agreement to do so.

(v) If a party to the dispute believes that the arbitrator or arbitration panel has recommended an action contrary to or inconsistent with the Clean Water Act, the party may appeal the arbitrator's recommendation to the Regional Administrator. The request for appeal must be in writing and must include a description of the statutory basis for altering the arbitrator's recommendation.

(vi) The procedure and schedule for arbitration of individual disputes shall be determined by the arbitrator or arbitration panel in consultation with parties.

(vii) If formal public hearings are held in connection with the actions taken under this paragraph, Agency requirements at 40 CFR 25.5 shall be followed.

(3) *Dispute resolution default procedure*. Where one or more parties (as defined in paragraph (g) of this section) refuse to participate in either the mediation or arbitration dispute resolution processes, the Regional Administrator may appoint a single official or panel to review available information pertaining to the dispute and to issue a written recommendation for resolving the dispute. Review officials shall be EPA employees, employees from other Federal agencies, or other individuals with appropriate qualifications. Review panels shall include appropriate members to be selected by the Regional Administrator in consultation with the participating parties. Recommendations of such review officials or panels shall, to the extent possible given the lack of participation by one or more parties, be reached in a manner identical to that for arbitration of disputes specified in paragraphs (f)(2)(i) through (f)(2)(vii) of this section.

(g) *Definitions*. For the purposes of this section:

(1) *Dispute Resolution Mechanism* means the EPA mechanism established pursuant to the requirements of Clean Water Act section 518(e) for resolving unreasonable consequences that arise as a result of differing water quality standards that may be set by States and Indian Tribes located on common bodies of water.

(2) *Parties* to a State-Tribal dispute include the State and the Tribe and may, at the discretion of the Regional Administrator, include an NPDES permittee, citizen, citizen group, or other affected entity.

[56 FR 64894, Dec. 12, 1991, as amended at 59 FR 64344, Dec. 14, 1994]

§ 131.8 Requirements for Indian Tribes to administer a water quality standards program.

(a) The Regional Administrator, as determined based on OMB Circular A–105, may accept and approve a tribal application for purposes of administering a water quality standards program if the Tribe meets the following criteria:

(1) The Indian Tribe is recognized by the Secretary of the Interior and meets the definitions in § 131.3 (k) and (l),

(2) The Indian Tribe has a governing body carrying out substantial governmental duties and powers,

(3) The water quality standards program to be administered by the Indian Tribe pertains to the management and protection of water resources which are within the borders of the Indian reservation and held by the Indian Tribe, within the borders of the Indian reservation and held by the United States in trust for Indians, within the borders of the Indian reservation and held by a member of the Indian Tribe if such property interest is subject to a trust restriction on alienation, or otherwise within the borders of the Indian reservation, and

(4) The Indian Tribe is reasonably expected to be capable, in the Regional Administrator's judgment, of carrying out the functions of an effective water quality standards program in a manner consistent with the terms and purposes of the Act and applicable regulations.

(b) Requests by Indian Tribes for administration of a water quality standards program should be submitted to the lead EPA Regional Administrator. The application shall include the following information:

(1) A statement that the Tribe is recognized by the Secretary of the Interior.

(2) A descriptive statement demonstrating that the Tribal governing body is currently carrying out substantial governmental duties and powers over a defined area. The statement should:

(i) Describe the form of the Tribal government;

(ii) Describe the types of governmental functions currently performed by the Tribal governing body such as, but not limited to, the exercise of police powers affecting (or relating to) the health, safety, and welfare of the affected population, taxation, and the exercise of the power of eminent domain; and

(iii) Identify the source of the Tribal government's authority to carry out the governmental functions currently being performed.

(3) A descriptive statement of the Indian Tribe's authority to regulate water quality. The statement should include:

(i) A map or legal description of the area over which the Indian Tribe asserts authority to regulate surface water quality;

(ii) A statement by the Tribe's legal counsel (or equivalent official) which describes the basis for the Tribes assertion of authority and which may include a copy of documents such as Tribal constitutions, by–laws, charters, executive orders, codes, ordinances, and/or resolutions which support the Tribe's assertion of authority; and

(iii) An identification of the surface waters for which the Tribe proposes to establish water quality standards.

(4) A narrative statement describing the capability of the Indian Tribe to administer an effective water quality standards program. The narrative statement should include:

(i) A description of the Indian Tribe's previous management experience which may include the administration of programs and services authorized by the Indian Self-Determination and Education Assistance Act (25 U.S.C. 450 *et seq.*), the Indian Mineral Development Act (25 U.S.C. 2101 *et seq.*), or the Indian Sanitation Facility Construction Activity Act (42 U.S.C. 2004a);

(ii) A list of existing environmental or public health programs administered by the Tribal governing body and copies of related Tribal laws, policies, and regulations;

(iii) A description of the entity (or entities) which exercise the executive, legislative, and judicial functions of the Tribal government;

(iv) A description of the existing, or proposed, agency of the Indian Tribe which will assume primary responsibility for establishing, reviewing, implementing and revising water quality standards;

(v) A description of the technical and administrative capabilities of the staff to administer and manage an effective water quality standards program or a plan which proposes how the Tribe will acquire additional administrative and technical expertise. The plan must address how the Tribe will obtain the funds to acquire the administrative and technical expertise.

(5) Additional documentation required by the Regional Administrator which, in the judgment of the Regional Administrator, is necessary to support a Tribal application.

(6) Where the Tribe has previously qualified for eligibility or ''treatment as a state'' under a Clean Water Act or Safe Drinking Water Act program, the Tribe need only provide the required information which has not been submitted in a previous application.

(c) Procedure for processing an Indian Tribe's application.

(1) The Regional Administrator shall process an application of an Indian Tribe submitted pursuant to § 131.8(b) in a timely manner. He shall promptly notify the Indian Tribe of receipt of the application.

(2) Within 30 days after receipt of the Indian Tribe's application the Regional Administrator shall provide appropriate notice. Notice shall:

(i) Include information on the substance and basis of the Tribe's assertion of authority to regulate the quality of reservation waters; and

(ii) Be provided to all appropriate governmental entities.

(3) The Regional Administrator shall provide 30 days for comments to be submitted on the Tribal application. Comments shall be limited to the Tribe's assertion of authority.

(4) If a Tribe's asserted authority is subject to a competing or conflicting claim, the Regional Administrator, after due consideration, and in consideration of other comments received, shall determine whether the Tribe has adequately demonstrated that it meets the requirements of § 131.8(a)(3).

(5) Where the Regional Administrator determines that a Tribe meets the requirements of this section, he shall promptly provide written notification to the Indian Tribe that the Tribe is authorized to administer the Water Quality Standards program.

[56 FR 64895, Dec. 12, 1991, as amended at 59 FR 64344, Dec. 14, 1994]

Subpart B—Establishment of Water Quality Standards

§ 131.10 Designation of uses.

(a) Each State must specify appropriate water uses to be achieved and protected. The classification of the waters of the State must take into consideration the use and value of water for public water supplies, protection and propagation of fish, shellfish and wildlife, recreation in and on the water, agricultural, industrial, and other purposes including navigation. In no case shall a State adopt waste transport or waste assimilation as a designated use for any waters of the United States.

(b) In designating uses of a water body and the appropriate criteria for those uses, the State shall take into consideration the water quality standards of downstream waters and shall ensure that its water quality standards provide for the attainment and maintenance of the water quality standards of downstream waters.

(c) States may adopt sub-categories of a use and set the appropriate criteria to reflect varying needs of such sub-categories of uses, for instance, to differentiate between cold water and warm water fisheries.

(d) At a minimum, uses are deemed attainable if they can be achieved by the imposition of effluent limits required under sections 301(b) and 306 of the Act and cost-effective and reasonable best management practices for nonpoint source control.

(e) Prior to adding or removing any use, or establishing sub-categories of a use, the State shall provide notice and an opportunity for a public hearing under § 131.20(b) of this regulation.

(f) States may adopt seasonal uses as an alternative to reclassifying a water body or segment thereof to uses requiring less stringent water quality criteria. If seasonal uses are adopted, water quality criteria should be adjusted to reflect the seasonal uses, however, such criteria shall not preclude the attainment and maintenance of a more protective use in another season.

(g) States may remove a designated use which is *not* an existing use, as defined in § 131.3, or establish sub-categories of a use if the State can demonstrate that attaining the designated use is not feasible because:

(1) Naturally occurring pollutant concentrations prevent the attainment of the use; or

(2) Natural, ephemeral, intermittent or low flow conditions or water levels prevent the attainment of the use, unless these conditions may be compensated for by the discharge of sufficient volume of effluent discharges without violating State water conservation requirements to enable uses to be met; or

(3) Human caused conditions or sources of pollution prevent the attainment of the use and cannot be remedied or would cause more environmental damage to correct than to leave in place; or

(4) Dams, diversions or other types of hydrologic modifications preclude the attainment of the use, and it is not feasible to restore the water body to its original condition or to operate such modification in a way that would result in the attainment of the use; or

(5) Physical conditions related to the natural features of the water body, such as the lack of a proper substrate, cover, flow, depth, pools, riffles, and the like, unrelated to water quality,

preclude attainment of aquatic life protection uses; or

(6) Controls more stringent than those required by sections 301(b) and 306 of the Act would result in substantial and widespread economic and social impact.

(h) States may not remove designated uses if:

(1) They are existing uses, as defined in § 131.3, unless a use requiring more stringent criteria is added; or

(2) Such uses will be attained by implementing effluent limits required under sections 301(b) and 306 of the Act and by implementing cost-effective and reasonable best management practices for nonpoint source control.

(i) Where existing water quality standards specify designated uses less than those which are presently being attained, the State shall revise its standards to reflect the uses actually being attained.

(j) A State must conduct a use attainability analysis as described in § 131.3(g) whenever:

(1) The State designates or has designated uses that do not include the uses specified in section 101(a)(2) of the Act, or

(2) The State wishes to remove a designated use that is specified in section 101(a)(2) of the Act or to adopt subcategories of uses specified in section 101(a)(2) of the Act which require less stringent criteria.

(k) A State is not required to conduct a use attainability analysis under this regulation whenever designating uses which include those specified in section 101(a)(2) of the Act.

§ 131.11 Criteria.

(a) *Inclusion of pollutants:* (1) States must adopt those water quality criteria that protect the designated use. Such criteria must be based on sound scientific rationale and must contain sufficient parameters or constituents to protect the designated use. For waters with multiple use designations, the criteria shall support the most sensitive use.

(2) *Toxic pollutants.* States must review water quality data and information on discharges to identify specific water bodies where toxic pollutants may be adversely affecting water quality or the attainment of the designated water use or where the levels of toxic pollutants are at a level to warrant concern and must adopt criteria for such toxic pollutants applicable to the water body sufficient to protect the designated use. Where a State adopts narrative criteria for toxic pollutants to protect designated uses, the State must provide information identifying the method by which the State intends to regulate point source discharges of toxic pollutants on water quality limited segments based on such narrative criteria. Such information may be included as part of the standards or may be included in documents generated by the State in response to the Water Quality Planning and Management Regulations (40 CFR part 35).

(b) Form of criteria: In establishing criteria, States should:

(1) Establish numerical values based on:

(i) 304(a) Guidance; or

(ii) 304(a) Guidance modified to reflect site-specific conditions; or

(iii) Other scientifically defensible methods;

(2) Establish narrative criteria or criteria based upon biomonitoring methods where numerical criteria cannot be established or to supplement numerical criteria.

§ 131.12 Antidegradation policy.

(a) The State shall develop and adopt a statewide antidegradation policy and identify the methods for implementing such policy pursuant to this subpart. The antidegradation policy and implementation methods shall, at a minimum, be consistent with the following:

(1) Existing instream water uses and the level of water quality necessary to protect the existing uses shall be maintained and protected.

(2) Where the quality of the waters exceed levels necessary to support propagation of fish, shellfish, and wildlife and recreation in and on the water, that quality shall be maintained and protected unless the State finds, after full satisfaction of the intergovernmental coordination and public participation provisions of the State's continuing planning process, that allowing

lower water quality is necessary to accommodate important economic or social development in the area in which the waters are located. In allowing such degradation or lower water quality, the State shall assure water quality adequate to protect existing uses fully. Further, the State shall assure that there shall be achieved the highest statutory and regulatory requirements for all new and existing point sources and all cost-effective and reasonable best management practices for nonpoint source control.

(3) Where high quality waters constitute an outstanding National resource, such as waters of National and State parks and wildlife refuges and waters of exceptional recreational or ecological significance, that water quality shall be maintained and protected.

(4) In those cases where potential water quality impairment associated with a thermal discharge is involved, the antidegradation policy and implementing method shall be consistent with section 316 of the Act.

§ 131.13 General policies.

States may, at their discretion, include in their State standards, policies generally affecting their application and implementation, such as mixing zones, low flows and variances. Such policies are subject to EPA review and approval.

Subpart C—Procedures for Review and Revision of Water Quality Standards

§ 131.20 State review and revision of water quality standards.

(a) *State review*. The State shall from time to time, but at least once every three years, hold public hearings for the purpose of reviewing applicable water quality standards and, as appropriate, modifying and adopting standards. Any water body segment with water quality standards that do not include the uses specified in section 101(a)(2) of the Act shall be re-examined every three years to determine if any new information has become available. If such new information indicates that the uses specified in section 101(a)(2) of the Act are attainable, the State shall revise its standards accordingly. Procedures States establish for identifying and reviewing water bodies for review should be incorporated into their Continuing Planning Process.

(b) *Public participation*. The State shall hold a public hearing for the purpose of reviewing water quality standards, in accordance with provisions of State law, EPA's water quality management regulation (40 CFR 130.3(b)(6)) and public participation regulation (40 CFR part 25). The proposed water quality standards revision and supporting analyses shall be made available to the public prior to the hearing.

(c) *Submittal to EPA*. The State shall submit the results of the review, any supporting analysis for the use attainability analysis, the methodologies used for site-specific criteria development, any general policies applicable to water quality standards and any revisions of the standards to the Regional Administrator for review and approval, within 30 days of the final State action to adopt and certify the revised standard, or if no revisions are made as a result of the review, within 30 days of the completion of the review.

§ 131.21 EPA review and approval of water quality standards.

(a) After the State submits its officially adopted revisions, the Regional Administrator shall either:

(1) Notify the State within 60 days that the revisions are approved, or

(2) Notify the State within 90 days that the revisions are disapproved. Such notification of disapproval shall specify the changes needed to assure compliance with the requirements of the Act and this regulation, and shall explain why the State standard is not in compliance with such requirements. Any new or revised State standard must be accompanied by some type of supporting analysis.

(b) The Regional Administrator's approval or disapproval of a State water quality standard shall be based on the requirements of the Act as described in §§ 131.5 and 131.6, and, with respect to Great Lakes States or Tribes (as defined in 40 CFR 132.2), 40 CFR part 132.

(c) A State water quality standard remains in effect, even though disapproved by EPA, until the State revises it or EPA promulgates a rule that supersedes the State water quality standard.

(d) EPA shall, at least annually, publish in the FEDERAL REGISTER a notice of approvals under this section.

[48 FR 51405, Nov. 8, 1983, as amended at 60 FR 15387, Mar. 23, 1995]

§ 131.22 EPA promulgation of water quality standards.

(a) If the State does not adopt the changes specified by the Regional Administrator within 90 days after notification of the Regional Administrator's disapproval, the Administrator shall promptly propose and promulgate such standard.

(b) The Administrator may also propose and promulgate a regulation, applicable to one or more States, setting forth a new or revised standard upon determining such a standard is necessary to meet the requirements of the Act.

(c) In promulgating water quality standards, the Administrator is subject to the same policies, procedures, analyses, and public participation requirements established for States in these regulations.

Subpart D—Federally Promulgated Water Quality Standards

§ 131.31 Arizona.

(a) Article 6, part 2 is amended as follows:

(1) Reg. 6–2–6.11 shall read:

Reg. 6–2–6.11 Nutrient Standards. A. The mean annual total phosphate and mean annual total nitrate concentrations of the following waters shall not exceed the values given below nor shall the total phosphate or total nitrate concentrations of more than 10 percent of the samples in any year exceed the 90 percent values given below. Unless otherwise specified, indicated values also apply to tributaries to the named waters.

	Mean 90 pct annual value	
	Total phosphates as PO_4mg/l	Total nitrates as NO_3mg/l
1. Colorado River from Utah border to Willow Beach (main stem)	0.04–0.06	4–7
2. Colorado River from Willow Beach to Parker Dam (main stem)	0.06–0.10	5
3. Colorado River from Parker Dam to Imperial Dam (main stem)	0.08–0.12	5–7
4. Colorado River from Imperial Dam to Morelos Dam (main stem)	0.10–0.10	5–7
5. Gila River from New Mexico border to San Carlos Reservoir (excluding San Carlos Reservoir)	0.50–0.80	.....
6. Gila River from San Carlos Reservoir to Ashurst Hayden Dam (including San Carlos Reservoir).	0.30–0.50	.....
7. San Pedro River	0.30–0.50	.....
8. Verde River (except Granite Creek)	0.20–0.30	.....
9. Salt River above Roosevelt Lake	0.20–0.30	.....
10. Santa Cruz River from international boundary near Nogales to Sahuarita	0.50–0.80	.....
11. Little Colorado River above Lyman Reservoir	0.30–0.50	.....

B. The above standards are intended to protect the beneficial uses of the named waters. Because regulation of nitrates and phosphates alone may not be adequate to protect waters from eutrophication, no substance shall be added to any surface water which produces aquatic growth to the extent that such growths create a public nuisance or interference with beneficial uses of the water defined and designated in Reg. 6–2–6.5.

(2) Reg. 6–2–6.10 Subparts A and B are amended to include Reg. 6–2–6.11 in series with Regs. 6–2–6.6, 6–2–6.7 and 6–2–6.8.

(b) The following waters have, in addition to the uses designated by the State, the designated use of fish consumption as defined in R18–11–101 (which is available from the Arizona Department of Environmental Quality, Water Quality Division, 3033 North Central Ave., Phoenix, AZ 85012):

COLORADO MAIN STEM RIVER BASIN:

Hualapai Wash

MIDDLE GILA RIVER BASIN:

Agua Fria River (Camelback Road to Avondale WWTP)
Galena Gulch
Gila River (Felix Road to the Salt River)
Queen Creek (Headwaters to the Superior WWTP)
Queen Creek (Below Potts Canyon)
SAN PEDRO RIVER BASIN:
Copper Creek
SANTA CRUZ RIVER BASIN:
Agua Caliente Wash
Nogales Wash
Sonoita Creek (Above the town of Patagonia)
Tanque Verde Creek
Tinaja Wash
Davidson Canyon
UPPER GILA RIVER BASIN
Chase Creek

(c) To implement the requirements of R18–11–108.A.5 with respect to effects of mercury on wildlife, EPA (or the State with the approval of EPA) shall implement a monitoring program to assess attainment of the water quality standard.

(Sec. 303, Federal Water Pollution Control Act, as amended, 33 U.S.C. 1313, 86 Stat. 816 *et seq.*, Pub. L. 92–500; Clean Water Act, Pub. L. 92–500, as amended; 33 U.S.C. 1251 *et seq.)*

[41 FR 25000, June 22, 1976; 41 FR 48737, Nov. 5, 1976. Redesignated and amended at 42 FR 56740, Oct. 28, 1977. Further redesignated and amended at 48 FR 51408, Nov. 8, 1983; 61 FR 20693, May 7, 1996]

§ 131.32 Pennsylvania.

(a) *Antidegradation policy*. This antidegradation policy shall be applicable to all waters of the United States within the Commonwealth of Pennsylvania, including wetlands.

(1) Existing in-stream uses and the level of water quality necessary to protect the existing uses shall be maintained and protected.

(2) Where the quality of the waters exceeds levels necessary to support propagation of fish, shellfish, and wildlife and recreation in and on the water, that quality shall be maintained and protected unless the Commonwealth finds, after full satisfaction of the inter-governmental coordination and public participation provisions of the Commonwealth's continuing planning process, that allowing lower water quality is necessary to accommodate important economic or social development in the area in which the waters are located. In allowing such degradation or lower water quality, the Commonwealth shall assure water quality adequate to protect existing uses fully. Further, the Commonwealth shall assure that there shall be achieved the highest statutory and regulatory requirements for all new and existing point sources and all cost-effective and reasonable best management practices for nonpoint sources.

(3) Where high quality waters are identified as constituting an outstanding National resource, such as waters of National and State parks and wildlife refuges and water of exceptional recreational and ecological significance, that water quality shall be maintained and protected.

(b) [Reserved]

[61 FR 64822, Dec. 9, 1996]

§§ 131.33–131.34 [Reserved]

§ 131.35 Colville Confederated Tribes Indian Reservation.

The water quality standards applicable to the waters within the Colville Indian Reservation, located in the State of Washington.

(a) *Background*. (1) It is the purpose of these Federal water quality standards to prescribe minimum water quality requirements for the surface waters located within the exterior boundaries of the Colville Indian Reservation to ensure compliance with section 303(c) of the Clean Water Act.

(2) The Colville Confederated Tribes have a primary interest in the protection, control, conservation, and utilization of the water resources of the Colville Indian Reservation. Water quality standards have been enacted into tribal law by the Colville Business Council of the Confederated Tribes of the Colville Reservation, as the Colville Water Quality Standards Act, CTC Title 33 (Resolution No. 1984–526 (August 6, 1984) as amended by Resolution No. 1985–20 (January 18, 1985)).

(b) *Territory Covered*. The provisions of these water quality standards shall apply to all surface waters within the exterior boundaries of the Colville Indian Reservation.

(c) *Applicability, Administration and Amendment.* (1) The water quality standards in this section shall be used by the Regional Administrator for establishing any water quality based National Pollutant Discharge Elimination System Permit (NPDES) for point sources on the Colville Confederated Tribes Reservation.

(2) In conjunction with the issuance of section 402 or section 404 permits, the Regional Administrator may designate mixing zones in the waters of the United States on the reservation on a case-by-case basis. The size of such mixing zones and the in-zone water quality in such mixing zones shall be consistent with the applicable procedures and guidelines in EPA's Water Quality Standards Handbook and the Technical Support Document for Water Quality Based Toxics Control.

(3) Amendments to the section at the request of the Tribe shall proceed in the following manner.

(i) The requested amendment shall first be duly approved by the Confederated Tribes of the Colville Reservation (and so certified by the Tribes Legal Counsel) and submitted to the Regional Administrator.

(ii) The requested amendment shall be reviewed by EPA (and by the State of Washington, if the action would affect a boundary water).

(iii) If deemed in compliance with the Clean Water Act, EPA will propose and promulgate an appropriate change to this section.

(4) Amendment of this section at EPA's initiative will follow consultation with the Tribe and other appropriate entities. Such amendments will then follow normal EPA rulemaking procedures.

(5) All other applicable provisions of this part 131 shall apply on the Colville Confederated Tribes Reservation. Special attention should be paid to §§ 131.6, 131.10, 131.11 and 131.20 for any amendment to these standards to be initiated by the Tribe.

(6) All numeric criteria contained in this section apply at all in-stream flow rates greater than or equal to the flow rate calculated as the minimum 7-consecutive day average flow with a recurrence frequency of once in ten years (7Q10); narrative criteria (§ 131.35(e)(3)) apply regardless of flow. The 7Q10 low flow shall be calculated using methods recommended by the U.S. Geological Survey.

(d) *Definitions.* (1) *Acute toxicity* means a deleterious response (e.g., mortality, disorientation, immobilization) to a stimulus observed in 96 hours or less.

(2) *Background conditions* means the biological, chemical, and physical conditions of a water body, upstream from the point or non-point source discharge under consideration. Background sampling location in an enforcement action will be upstream from the point of discharge, but not upstream from other inflows. If several discharges to any water body exist, and an enforcement action is being taken for possible violations to the standards, background sampling will be undertaken immediately upstream from each discharge.

(3) *Ceremonial and Religious water use* means activities involving traditional Native American spiritual practices which involve, among other things, primary (direct) contact with water.

(4) *Chronic Toxicity* means the lowest concentration of a constituent causing observable effects (i.e., considering lethality, growth, reduced reproduction, etc.) over a relatively long period of time, usually a 28-day test period for small fish test species.

(5) *Council* or *Tribal Council* means the Colville Business Council of the Colville Confederated Tribes.

(6) *Geometric mean* means the *nth* root of a product of *n* factors.

(7) *Mean retention time* means the time obtained by dividing a reservoir's mean annual minimum total storage by the non-zero 30-day, ten-year low-flow from the reservoir.

(8) *Mixing Zone* or *dilution zone* means a limited area or volume of water where initial dilution of a discharge takes place; and where numeric water quality criteria can be exceeded but acutely toxic conditions are prevented from occurring.

(9) *pH* means the negative logarithm of the hydrogen ion concentration.

(10) *Primary contact recreation* means activities where a person would have direct contact with water to the point of complete submergence, including

but not limited to skin diving, swimming, and water skiing.

(11) *Regional Administrator* means the Administrator of EPA's Region X.

(12) *Reservation* means all land within the limits of the Colville Indian Reservation, established on July 2, 1872 by Executive Order, presently containing 1,389,000 acres more or less, and under the jurisdiction of the United States government, notwithstanding the issuance of any patent, and including rights-of-way running through the reservation.

(13) *Secondary contact recreation* means activities where a person's water contact would be limited to the extent that bacterial infections of eyes, ears, respiratory, or digestive systems or urogenital areas would normally be avoided (such as wading or fishing).

(14) *Surface water* means all water above the surface of the ground within the exterior boundaries of the Colville Indian Reservation including but not limited to lakes, ponds, reservoirs, artificial impoundments, streams, rivers, springs, seeps and wetlands.

(15) *Temperature* means water temperature expressed in Centigrade degrees (C).

(16) *Total dissolved solids* (TDS) means the total filterable residue that passes through a standard glass fiber filter disk and remains after evaporation and drying to a constant weight at 180 degrees C. it is considered to be a measure of the dissolved salt content of the water.

(17) *Toxicity* means acute and/or chronic toxicity.

(18) *Tribe* or *Tribes* means the Colville Confederated Tribes.

(19) *Turbidity* means the clarity of water expressed as nephelometric turbidity units (NTU) and measured with a calibrated turbidimeter.

(20) *Wildlife habitat* means the waters and surrounding land areas of the Reservation used by fish, other aquatic life and wildlife at any stage of their life history or activity.

(e) *General considerations.* The following general guidelines shall apply to the water quality standards and classifications set forth in the use designation Sections.

(1) *Classification boundaries.* At the boundary between waters of different classifications, the water quality standards for the higher classification shall prevail.

(2) *Antidegradation policy.* This antidegradation policy shall be applicable to all surface waters of the Reservation.

(i) Existing in-stream water uses and the level of water quality necessary to protect the existing uses shall be maintained and protected.

(ii) Where the quality of the waters exceeds levels necessary to support propagation of fish, shellfish, and wildlife and recreation in and on the water, that quality shall be maintained and protected unless the Regional Administrator finds, after full satisfaction of the inter-governmental coordination and public participation provisions of the Tribes' continuing planning process, that allowing lower water quality is necessary to accommodate important economic or social development in the area in which the waters are located. In allowing such degradation or lower water quality, the Regional Administrator shall assure water quality adequate to protect existing uses fully. Further, the Regional Administrator shall assure that there shall be achieved the highest statutory and regulatory requirements for all new and existing point sources and all cost-effective and reasonable best management practices for nonpoint source control.

(iii) Where high quality waters are identified as constituting an outstanding national or reservation resource, such as waters within areas designated as unique water quality management areas and waters otherwise of exceptional recreational or ecological significance, and are designated as special resource waters, that water quality shall be maintained and protected.

(iv) In those cases where potential water quality impairment associated with a thermal discharge is involved, this antidegradation policy's implementing method shall be consistent with section 316 of the Clean Water Act.

(3) *Aesthetic qualities.* All waters within the Reservation, including those within mixing zones, shall be free from substances, attributable to wastewater

discharges or other pollutant sources, that:

(i) Settle to form objectionable deposits;

(ii) Float as debris, scum, oil, or other matter forming nuisances;

(iii) Produce objectionable color, odor, taste, or turbidity;

(iv) Cause injury to, are toxic to, or produce adverse physiological responses in humans, animals, or plants; or

(v) produce undesirable or nuisance aquatic life.

(4) *Analytical methods.* (i) The analytical testing methods used to measure or otherwise evaluate compliance with water quality standards shall to the extent practicable, be in accordance with the ''Guidelines Establishing Test Procedures for the Analysis of Pollutants'' (40 CFR part 136). When a testing method is not available for a particular substance, the most recent edition of ''Standard Methods for the Examination of Water and Wastewater'' (published by the American Public Health Association, American Water Works Association, and the Water Pollution Control Federation) and other or superseding methods published and/or approved by EPA shall be used.

(f) *General water use and criteria classes.* The following criteria shall apply to the various classes of surface waters on the Colville Indian Reservation:

(1) *Class I (Extraordinary)*—(i) *Designated uses.* The designated uses include, but are not limited to, the following:

(A) Water supply (domestic, industrial, agricultural).

(B) Stock watering.

(C) Fish and shellfish: Salmonid migration, rearing, spawning, and harvesting; other fish migration, rearing, spawning, and harvesting.

(D) Wildlife habitat.

(E) Ceremonial and religious water use.

(F) Recreation (primary contact recreation, sport fishing, boating and aesthetic enjoyment).

(G) Commerce and navigation.

(ii) *Water quality criteria.* (A) Bacteriological Criteria. The geometric mean of the enterococci bacteria densities in samples taken over a 30 day period shall not exceed 8 per 100 milliliters, nor shall any single sample exceed an enterococci density of 35 per 100 milliliters. These limits are calculated as the geometric mean of the collected samples approximately equally spaced over a thirty day period.

(B) Dissolved oxygen—The dissolved oxygen shall exceed 9.5 mg/l.

(C) Total dissolved gas—concentrations shall not exceed 110 percent of the saturation value for gases at the existing atmospheric and hydrostatic pressures at any point of sample collection.

(D) Temperature—shall not exceed 16.0 degrees C due to human activities. Temperature increases shall not, at any time, exceed $t=23/(T+5)$.

(*1*) When natural conditions exceed 16.0 degrees C, no temperature increase will be allowed which will raise the receiving water by greater than 0.3 degrees C.

(*2*) For purposes hereof, ''t'' represents the permissive temperature change across the dilution zone; and ''T'' represents the highest existing temperature in this water classification outside of any dilution zone.

(*3*) Provided that temperature increase resulting from nonpoint source activities shall not exceed 2.8 degrees C, and the maximum water temperature shall not exceed 10.3 degrees C.

(E) pH shall be within the range of 6.5 to 8.5 with a human-caused variation of less than 0.2 units.

(F) Turbidity shall not exceed 5 NTU over background turbidity when the background turbidity is 50 NTU or less, or have more than a 10 percent increase in turbidity when the background turbidity is more than 50 NTU.

(G) Toxic, radioactive, nonconventional, or deleterious material concentrations shall be less than those of public health significance, or which may cause acute or chronic toxic conditions to the aquatic biota, or which may adversely affect designated water uses.

(2) *Class II (Excellent)*—(i) *Designated uses.* The designated uses include but are not limited to, the following:

(A) Water supply (domestic, industrial, agricultural).

(B) Stock watering.

(C) Fish and shellfish: Salmonid migration, rearing, spawning, and harvesting; other fish migration, rearing, spawning, and harvesting; crayfish rearing, spawning, and harvesting.

(D) Wildlife habitat.

(E) Ceremonial and religious water use.

(F) Recreation (primary contact recreation, sport fishing, boating and aesthetic enjoyment).

(G) Commerce and navigation.

(ii) *Water quality criteria.* (A) Bacteriological Criteria—The geometric mean of the enterococci bacteria densities in samples taken over a 30 day period shall not exceed 16/100 ml, nor shall any single sample exceed an enterococci density of 75 per 100 milliliters. These limits are calculated as the geometric mean of the collected samples approximately equally spaced over a thirty day period.

(B) Dissolved oxygen—The dissolved oxygen shall exceed 8.0 mg/l.

(C) Total dissolved gas—concentrations shall not exceed 110 percent of the saturation value for gases at the existing atmospheric and hydrostatic pressures at any point of sample collection.

(D) Temperature-shall not exceed 18.0 degrees C due to human activities. Temperature increases shall not, at any time, exceed t=28/(T+7).

(*1*) When natural conditions exceed 18 degrees C no temperature increase will be allowed which will raise the receiving water temperature by greater than 0.3 degrees C.

(*2*) For purposes hereof, ''t'' represents the permissive temperature change across the dilution zone; and ''T'' represents the highest existing temperature in this water classification outside of any dilution zone.

(*3*) Provided that temperature increase resulting from non-point source activities shall not exceed 2.8 degrees C, and the maximum water temperature shall not exceed 18.3 degrees C.

(E) pH shall be within the range of 6.5 to 8.5 with a human-caused variation of less than 0.5 units.

(F) Turbidity shall not exceed 5 NTU over background turbidity when the background turbidity is 50 NTU or less, or have more than a 10 percent increase in turbidity when the background turbidity is more than 50 NTU.

(G) Toxic, radioactive, nonconventional, or deleterious material concentrations shall be less than those of public health significance, or which may cause acute or chronic toxic conditions to the aquatic biota, or which may adversely affect designated water uses.

(3) *Class III (Good)*—(i) *Designated uses.* The designated uses include but are not limited to, the following:

(A) Water supply (industrial, agricultural).

(B) Stock watering.

(C) Fish and shellfish: Salmonid migration, rearing, spawning, and harvesting; other fish migration, rearing, spawning, and harvesting; crayfish rearing, spawning, and harvesting.

(D) Wildlife habitat.

(E) Recreation (secondary contact recreation, sport fishing, boating and aesthetic enjoyment).

(F) Commerce and navigation.

(ii) *Water quality criteria.* (A) Bacteriological Criteria—The geometric mean of the enterococci bacteria densities in samples taken over a 30 day period shall not exceed 33/100 ml, nor shall any single sample exceed an enterococci density of 150 per 100 milliliters. These limits are calculated as the geometric mean of the collected samples approximately equally spaced over a thirty day period.

(B) Dissolved oxygen.

	Early life stages [1,2]	Other life stages
7 day mean	9.5 (6.5)	[3] NA
1 day minimum [4]	8.0 (5.0)	6.5

[1] These are water column concentrations recommended to achieve the required intergravel dissolved oxygen concentrations shown in parentheses. The 3 mg/L differential is discussed in the dissolved oxygen criteria document (EPA 440/5–86–003, April 1986). For species that have early life stages exposed directly to the water column, the figures in parentheses apply.

[2] Includes all embryonic and larval stages and all juvenile forms to 30-days following hatching.

[3] NA (not applicable)

[4] All minima should be considered as instantaneous concentrations to be achieved at all times.

(C) Total dissolved gas concentrations shall not exceed 110 percent of the saturation value for gases at the existing atmospheric and hydrostatic pressures at any point of sample collection.

(D) Temperature shall not exceed 21.0 degrees C due to human activities. Temperature increases shall not, at any time, exceed t=34/(T+9).

(*1*) When natural conditions exceed 21.0 degrees C no temperature increase will be allowed which will raise the receiving water temperature by greater than 0.3 degrees C.

(*2*) For purposes hereof, ''t'' represents the permissive temperature change across the dilution zone; and ''T'' represents the highest existing temperature in this water classification outside of any dilution zone.

(*3*) Provided that temperature increase resulting from nonpoint source activities shall not exceed 2.8 degrees C, and the maximum water temperature shall not exceed 21.3 degrees C.

(E) pH shall be within the range of 6.5 to 8.5 with a human-caused variation of less than 0.5 units.

(F) Turbidity shall not exceed 10 NTU over background turbidity when the background turbidity is 50 NTU or less, or have more than a 20 percent increase in turbidity when the background turbidity is more than 50 NTU.

(G) Toxic, radioactive, nonconventional, or deleterious material concentrations shall be less than those of public health significance, or which may cause acute or chronic toxic conditions to the aquatic biota, or which may adversely affect designated water uses.

(4) *Class IV (Fair)*—(i) *Designated uses.* The designated uses include but are not limited to, the following:

(A) Water supply (industrial).

(B) Stock watering.

(C) Fish (salmonid and other fish migration).

(D) Recreation (secondary contact recreation, sport fishing, boating and aesthetic enjoyment).

(E) Commerce and navigation.

(ii) *Water quality criteria.* (A) Dissolved oxygen.

	During periods of salmonid and other fish migration	During all other time periods
30 day mean	6.5	5.5
7 day mean	[1] NA	[1] NA
7 day mean minimum	5.0	4.0
1 day minimum [2]	4.0	3.0

[1] NA (not applicable).
[2] All minima should be considered as instantaneous concentrations to be achieved at all times.

(B) Total dissolved gas—concentrations shall not exceed 110 percent of the saturation value for gases at the existing atmospheric and hydrostatic pressures at any point of sample collection.

(C) Temperature shall not exceed 22.0 degrees C due to human activities. Temperature increases shall not, at any time, exceed t=20/(T+2).

(*1*) When natural conditions exceed 22.0 degrees C, no temperature increase will be allowed which will raise the receiving water temperature by greater than 0.3 degrees C.

(*2*) For purposes hereof, ''t'' represents the permissive temperature change across the dilution zone; and ''T'' represents the highest existing temperature in this water classification outside of any dilution zone.

(D) pH shall be within the range of 6.5 to 9.0 with a human-caused variation of less than 0.5 units.

(E) Turbidity shall not exceed 10 NTU over background turbidity when the background turbidity is 50 NTU or less, or have more than a 20 percent increase in turbidity when the background turbidity is more than 50 NTU.

(F) Toxic, radioactive, nonconventional, or deleterious material concentrations shall be less than those of public health significance, or which may cause acute or chronic toxic conditions to the aquatic biota, or which may adversely affect designated water uses.

(5) *Lake Class*—(i) *Designated uses.* The designated uses include but are not limited to, the following:

(A) Water supply (domestic, industrial, agricultural).

(B) Stock watering.

(C) Fish and shellfish: Salmonid migration, rearing, spawning, and harvesting; other fish migration, rearing, spawning, and harvesting; crayfish rearing, spawning, and harvesting.

(D) Wildlife habitat.

(E) Ceremonial and religious water use.

(F) Recreation (primary contact recreation, sport fishing, boating and aesthetic enjoyment).

(G) Commerce and navigation.

(ii) *Water quality criteria.* (A) Bacteriological Criteria. The geometric mean of the enterococci bacteria densities in samples taken over a 30 day period shall not exceed 33/100 ml, nor shall any single sample exceed an enterococci density of 150 per 100 milliliters. These limits are calculated as the geometric mean of the collected samples approximately equally spaced over a thirty day period.

(B) Dissolved oxygen—no measurable decrease from natural conditions.

(C) Total dissolved gas concentrations shall not exceed 110 percent of the saturation value for gases at the existing atmospheric and hydrostatic pressures at any point of sample collection.

(D) Temperature—no measurable change from natural conditions.

(E) pH—no measurable change from natural conditions.

(F) Turbidity shall not exceed 5 NTU over natural conditions.

(G) Toxic, radioactive, nonconventional, or deleterious material concentrations shall be less than those which may affect public health, the natural aquatic environment, or the desirability of the water for any use.

(6) *Special Resource Water Class (SRW)*—(i) *General characteristics.* These are fresh or saline waters which comprise a special and unique resource to the Reservation. Water quality of this class will be varied and unique as determined by the Regional Administrator in cooperation with the Tribes.

(ii) *Designated uses.* The designated uses include, but are not limited to, the following:

(A) Wildlife habitat.

(B) Natural foodchain maintenance.

(iii) Water quality criteria.

(A) Enterococci bacteria densities shall not exceed natural conditions.

(B) Dissolved oxygen—shall not show any measurable decrease from natural conditions.

(C) Total dissolved gas shall not vary from natural conditions.

(D) Temperature—shall not show any measurable change from natural conditions.

(E) pH shall not show any measurable change from natural conditions.

(F) Settleable solids shall not show any change from natural conditions.

(G) Turbidity shall not exceed 5 NTU over natural conditions.

(H) Toxic, radioactive, or deleterious material concentrations shall not exceed those found under natural conditions.

(g) *General Classifications.* General classifications applying to various surface waterbodies not specifically classified under § 131.35(h) are as follows:

(1) All surface waters that are tributaries to Class I waters are classified Class I, unless otherwise classified.

(2) Except for those specifically classified otherwise, all lakes with existing average concentrations less than 2000 mg/L TDS and their feeder streams on the Colville Indian Reservation are classified as Lake Class and Class I, respectively.

(3) All lakes on the Colville Indian Reservation with existing average concentrations of TDS equal to or exceeding 2000 mg/L and their feeder streams are classified as Lake Class and Class I respectively unless specifically classified otherwise.

(4) All reservoirs with a mean detention time of greater than 15 days are classified Lake Class.

(5) All reservoirs with a mean detention time of 15 days or less are classified the same as the river section in which they are located.

(6) All reservoirs established on preexisting lakes are classified as Lake Class.

(7) All wetlands are assigned to the Special Resource Water Class.

(8) All other waters not specifically assigned to a classification of the reservation are classified as Class II.

(h) *Specific Classifications.* Specific classifications for surface waters of the Colville Indian Reservation are as follows:

(1) Streams:

Alice Creek	Class III
Anderson Creek	Class III
Armstrong Creek	Class III
Barnaby Creek	Class II
Bear Creek	Class III
Beaver Dam Creek	Class II

Bridge Creek	Class II
Brush Creek	Class III
Buckhorn Creek	Class III
Cache Creek	Class III
Canteen Creek	Class I
Capoose Creek	Class III
Cobbs Creek	Class III
Columbia River from Chief Joseph Dam to Wells Dam.	
Columbia River from northern Reservation boundary to Grand Coulee Dam (Roosevelt Lake).	
Columbia River from Grand Coulee Dam to Chief Joseph Dam.	
Cook Creek	Class I
Cooper Creek	Class III
Cornstalk Creek	Class III
Cougar Creek	Class I
Coyote Creek	Class II
Deerhorn Creek	Class III
Dick Creek	Class III
Dry Creek	Class I
Empire Creek	Class III
Faye Creek	Class I
Forty Mile Creek	Class III
Gibson Creek	Class I
Gold Creek	Class II
Granite Creek	Class II
Grizzly Creek	Class III
Haley Creek	Class III
Hall Creek	Class II
Hall Creek, West Fork	Class I
Iron Creek	Class III
Jack Creek	Class III
Jerred Creek	Class I
Joe Moses Creek	Class III
John Tom Creek	Class III
Jones Creek	Class I
Kartar Creek	Class III
Kincaid Creek	Class III
King Creek	Class III
Klondyke Creek	Class I
Lime Creek	Class III
Little Jim Creek	Class III
Little Nespelem	Class II
Louie Creek	Class III
Lynx Creek	Class II
Manila Creek	Class III
McAllister Creek	Class III
Meadow Creek	Class III
Mill Creek	Class II
Mission Creek	Class III
Nespelem River	Class II
Nez Perce Creek	Class III
Nine Mile Creek	Class II
Nineteen Mile Creek	Class III
No Name Creek	Class II
North Nanamkin Creek	Class III
North Star Creek	Class III
Okanogan River from Reservation north boundary to Columbia River.	Class II
Olds Creek	Class I
Omak Creek	Class II
Onion Creek	Class II
Parmenter Creek	Class III
Peel Creek	Class III
Peter Dan Creek	Class III
Rock Creek	Class I
San Poil River	Class I
Sanpoil, River West Fork	Class II
Seventeen Mile Creek	Class III
Silver Creek	Class III
Sitdown Creek	Class III
Six Mile Creek	Class III
South Nanamkin Creek	Class III
Spring Creek	Class III
Stapaloop Creek	Class III
Stepstone Creek	Class III
Stranger Creek	Class II
Strawberry Creek	Class III
Swimptkin Creek	Class III
Three Forks Creek	Class I
Three Mile Creek	Class III
Thirteen Mile Creek	Class II
Thirty Mile Creek	Class II
Trail Creek	Class III
Twentyfive Mile Creek	Class III
Twentyone Mile Creek	Class III
Twentythree Mile Creek	Class III
Wannacot Creek	Class III
Wells Creek	Class I
Whitelaw Creek	Class III
Wilmont Creek	Class II
(2) Lakes:	
Apex Lake	LC
Big Goose Lake	LC
Bourgeau Lake	LC
Buffalo Lake	LC
Cody Lake	LC
Crawfish Lakes	LC
Camille Lake	LC
Elbow Lake	LC
Fish Lake	LC
Gold Lake	LC
Great Western Lake	LC
Johnson Lake	LC
LaFleur Lake	LC
Little Goose Lake	LC
Little Owhi Lake	LC
McGinnis Lake	LC
Nicholas Lake	LC
Omak Lake	SRW
Owhi Lake	SRW
Penley Lake	SRW
Rebecca Lake	LC
Round Lake	LC
Simpson Lake	LC
Soap Lake	LC
Sugar Lake	LC
Summit Lake	LC
Twin Lakes	SRW

[54 FR 28625, July 6, 1989]

§ 131.36 Toxics criteria for those states not complying with Clean Water Act section 303(c)(2)(B).

(a) *Scope.* This section is not a general promulgation of the section 304(a) criteria for priority toxic pollutants but is restricted to specific pollutants in specific States.

(b)(1) *EPA's Section 304(a) Criteria for Priority Toxic Pollutants.*

(#)	A COMPOUND	CAS Number	B FRESHWATER Criterion Maximum Conc. d (ug/L) B1	B FRESHWATER Criterion Continuous Conc. d (ug/L) B2	C SALTWATER Criterion Maximum Conc. d (ug/L) C1	C SALTWATER Criterion Continuous Conc. d (ug/L) C2	D HUMAN HEALTH (10^{-6} risk for carcinogens) For Consumption of: Water & Organisms (ug/L) D1	D HUMAN HEALTH (10^{-6} risk for carcinogens) For Consumption of: Organisms Only (ug/L) D2
1	Antimony	7440360					14 a	4300 a
2	Arsenic	7440382	360 m	190 m	69 m	36 m	0.018 abc	0.14 abc
3	Beryllium	7440417					n	n
4	Cadmium	7440439	3.7 e	1.0 e	42 m	9.3 m	n	n
5a	Chromium (III)	16065831	550 e	180 e			n	n
b	Chromium (VI)	18540299	15 m	10 m	1100 m	50 m	n	n
6	Copper	7440508	17 e	11 e	2.4 m	2.4 m		
7	Lead	7439921	65 e	2.5 e	210 m	8.1 m	n	n
8	Mercury	7439976	2.1 m	0.012 i,p	1.8 m	0.025 i,p	0.14	0.15
9	Nickel	7440020	1400 e	160 e	74 m	8.2 m	610 a	4600 a
10	Selenium	7782492	20 p	5 p	290 m	71 m	n	n
11	Silver	7440224	3.4 e		1.9 m			
12	Thallium	7440280					1.7 a	6.3 a
13	Zinc	7440666	110 e	100 e	90 m	81 m		
14	Cyanide	57125	22	5.2	1	1	700 a	220000 aj
15	Asbestos	1332214					7,000,000 fibers/L k	
16	2,3,7,8-TCDD (Dioxin)	1746016					0.000000013 c	0.000000014 c
17	Acrolein	107028					320	780
18	Acrylonitrile	107131					0.059 ac	0.66 ac
19	Benzene	71432					1.2 ac	71 ac
20	Bromoform	75252					4.3 ac	360 ac
21	Carbon Tetrachloride	56235					0.25 ac	4.4 ac
22	Chlorobenzene	108907					680 a	21000 aj
23	Chlorodibromomethane	124481					0.41 ac	34 ac
24	Chloroethane	75003						
25	2-Chloroethylvinyl Ether	110758						
26	Chloroform	67663					5.7 ac	470 ac
27	Dichlorobromomethane	75274					0.27 ac	22 ac
28	1,1-Dichloroethane	75343						

A			B		C		D	
			FRESHWATER		SALTWATER		HUMAN HEALTH (10^{-6} risk for carcinogens)	
(#)	COMPOUND	CAS Number	Criterion Maximum Conc. d (ug/L) B1	Criterion Continuous Conc. d (ug/L) B2	Criterion Maximum Conc. d (ug/L) C1	Criterion Continuous Conc. d (ug/L) C2	For Consumption of: Water & Organisms (ug/L) D1	Organisms Only (ug/L) D2
29	1,2-Dichloroethane	107062					0.38 ac	99 ac
30	1,1-Dichloroethylene	75354					0.057 ac	3.2 ac
31	1,2-Dichloropropane	78875						
32	1,3-Dichloropropylene	542756					10 a	1700 a
33	Ethylbenzene	100414					3100 a	29000 a
34	Methyl Bromide	74839					48 a	4000 a
35	Methyl Chloride	74873					n	n
36	Methylene Chloride	75092					4.7 ac	1600 ac
37	1,1,2,2-Tetrachloroethane	79345					0.17 ac	11 ac
38	Tetrachloroethylene	127184					0.8 c	8.85 c
39	Toluene	108883					6800 a	200000 a
40	1,2-Trans-Dichloroethylene	156605						
41	1,1,1-Trichloroethane	71556					n	n
42	1,1,2-Trichloroethane	79005					0.60 ac	42 ac
43	Trichloroethylene	79016					2.7 c	81 c
44	Vinyl Chloride	75014					2 c	525 c
45	2-Chlorophenol	95578						
46	2,4-Dichlorophenol	120832					93 a	790 aj
47	2,4-Dimethylphenol	105679						
48	2-Methyl-4,6-Dinitrophenol	534521					13.4	765
49	2,4-Dinitrophenol	51285					70 a	14000 a
50	2-Nitrophenol	88755						
51	4-Nitrophenol	100027						
52	3-Methyl-4-Chlorophenol	59507						
53	Pentachlorophenol	87865	20 f	13 f	13	7.9	0.28 ac	8.2 acj
54	Phenol	108952					21000 a	4600000 aj
55	2,4,6-Trichlorophenol	88062					2.1 ac	6.5 ac
56	Acenaphthene	83329						
57	Acenaphthylene	208968						
58	Anthracene	120127					9600 a	110000 a

	A		B		C		D	
			FRESHWATER		SALTWATER		HUMAN HEALTH (10^{-6} risk for carcinogens)	
(#)	COMPOUND	CAS Number	Criterion Maximum Conc. d (ug/L) B1	Criterion Continuous Conc. d (ug/L) B2	Criterion Maximum Conc. d (ug/L) C1	Criterion Continuous Conc. d (ug/L) C2	For Consumption of: Water & Organisms (ug/L) D1	Organisms Only (ug/L) D2
59	Benzidine	92875					0.00012 ac	0.00054 ac
60	Benzo(a)Anthracene	56553					0.0028 c	0.031 c
61	Benzo(a)Pyrene	50328					0.0028 c	0.031 c
62	Benzo(b)Fluoranthene	205992					0.0028 c	0.031 c
63	Benzo(ghi)Perylene	191242						
64	Benzo(k)Fluoranthene	207089					0.0028 c	0.031 c
65	Bis(2-Chloroethoxy)Methane	111911						
66	Bis(2-Chloroethyl)Ether	111444					0.031 ac	1.4 ac
67	Bis(2-Chloroisopropyl)Ether	108601					1400 a	170000 a
68	Bis(2-Ethylhexyl)Phthalate	117817					1.8 ac	5.9 ac
69	4-Bromophenyl Phenyl Ether	101553						
70	Butylbenzyl Phthalate	85687						
71	2-Chloronaphthalene	91587						
72	4-Chlorophenyl Phenyl Ether	7005723						
73	Chrysene	218019					0.0028 c	0.031 c
74	Dibenzo(a,h)Anthracene	53703					0.0028 c	0.031 c
75	1,2-Dichlorobenzene	95501					2700 a	17000 a
76	1,3-Dichlorobenzene	541731					400	2600
77	1,4-Dichlorobenzene	106467					400	2600
78	3,3′-Dichlorobenzidine	91941					0.04 ac	0.077 ac
79	Diethyl Phthalate	84662					23000 a	120000 a
80	Dimethyl Phthalate	131113					313000	2900000
81	Di-n-Butyl Phthalate	84742					2700 a	12000 a
82	2,4-Dinitrotoluene	121142					0.11 c	9.1 c
83	2,6-Dinitrotoluene	606202						
84	Di-n-Octyl Phthalate	117840						
85	1,2-Diphenylhydrazine	122667					0.040 ac	0.54 ac
86	Fluoranthene	206440					300 a	370 a
87	Fluorene	86737					1300 a	14000 a
88	Hexachlorobenzene	118741					0.00075 ac	0.00077 ac

(#)	A COMPOUND	CAS Number	B FRESHWATER Criterion Maximum Conc. d (ug/L) B1	B FRESHWATER Criterion Continuous Conc. d (ug/L) B2	C SALTWATER Criterion Maximum Conc. d (ug/L) C1	C SALTWATER Criterion Continuous Conc. d (ug/L) C2	D HUMAN HEALTH (10^{-6} risk for carcinogens) For Consumption of: Water & Organisms (ug/L) D1	D HUMAN HEALTH (10^{-6} risk for carcinogens) For Consumption of: Organisms Only (ug/L) D2
89	Hexachlorobutadiene	87683					0.44 ac	50 ac
90	Hexachlorocyclopentadiene	77474					240 a	17000 aj
91	Hexachloroethane	67721					1.9 ac	8.9 ac
92	Indeno(1,2,3-cd)Pyrene	193395					0.0028 c	0.031 c
93	Isophorone	78591					8.4 ac	600 ac
94	Naphthalene	91203						
95	Nitrobenzene	98953					17 a	1900 aj
96	N-Nitrosodimethylamine	62759					0.00069 ac	8.1 ac
97	N-Nitrosodi-n-Propylamine	621647						
98	N-Nitrosodiphenylamine	86306					5.0 ac	16 ac
99	Phenanthrene	85018						
100	Pyrene	129000					960 a	11000 a
101	1,2,4-Trichlorobenzene	120821						
102	Aldrin	309002	3 g		1.3 g		0.00013 ac	0.00014 ac
103	alpha-BHC	319846					0.0039 ac	0.013 ac
104	beta-BHC	319857					0.014 ac	0.046 ac
105	gamma-BHC	58899	2 g	0.08 g	0.16 g		0.019 c	0.063 c
106	delta-BHC	319868						
107	Chlordane	57749	2.4 g	0.0043 g	0.09 g	0.004 g	0.00057 ac	0.00059 ac
108	4-4'-DDT	50293	1.1 g	0.001 g	0.13 g	0.001 g	0.00059 ac	0.00059 ac
109	4,4'-DDE	72559					0.00059 ac	0.00059 ac
110	4,4'-DDD	72548					0.00083 ac	0.00084 ac
111	Dieldrin	60571	2.5 g	0.0019 g	0.71 g	0.0019 g	0.00014 ac	0.00014 ac
112	alpha-Endosulfan	959988	0.22 g	0.056 g	0.034 g	0.0087 g	0.93 a	2.0 a
113	beta-Endosulfan	33213659	0.22 g	0.056 g	0.034 g	0.0087 g	0.93 a	2.0 a
114	Endosulfan Sulfate	1031078					0.93 a	2.0 a
115	Endrin	72208	0.18 g	0.0023 g	0.037 g	0.0023 g	0.76 a	0.81 aj
116	Endrin Aldehyde	7421934					0.76 a	0.81 aj
117	Heptachlor	76448	0.52 g	0.0038 g	0.053 g	0.0036 g	0.00021 ac	0.00021 ac

A			B		C		D	
			FRESHWATER		SALTWATER		HUMAN HEALTH (10^{-6} risk for carcinogens)	
(#)	COMPOUND	CAS Number	Criterion Maximum Conc. d (ug/L) B1	Criterion Continuous Conc. d (ug/L) B2	Criterion Maximum Conc. d (ug/L) C1	Criterion Continuous Conc. d (ug/L) C2	For Consumption of: Water & Organisms (ug/L) D1	Organisms Only (ug/L) D2
118	Heptachlor Epoxide	1024573	0.52 g	0.0038 g	0.053 g	0.0036 g	0.00010 ac	0.00011 ac
119	PCB-1242	53469219		0.014 g		0.03 g	0.000044 ac	0.000045 ac
120	PCB-1254	11097691		0.014 g		0.03 g	0.000044 ac	0.000045 ac
121	PCB-1221	11104282		0.014 g		0.03 g	0.000044 ac	0.000045 ac
122	PCB-1232	11141165		0.014 g		0.03 g	0.000044 ac	0.000045 ac
123	PCB-1248	12672296		0.014 g		0.03 g	0.000044 ac	0.000045 ac
124	PCB-1260	11096825		0.014 g		0.03 g	0.000044 ac	0.000045 ac
125	PCB-1016	12674112		0.014 g		0.03 g	0.000044 ac	0.000045 ac
126	Toxaphene	8001352	0.73	0.0002	0.21	0.0002	0.00073 ac	0.00075 ac
Total No. of Criteria (h) =			24	29	23	27	91	90

Footnotes:

a. Criteria revised to reflect current agency q_1* or RfD, as contained in the Integrated Risk Information System (IRIS). The fish tissue bioconcentration factor (BCF) from the 1980 criteria documents was retained in all cases.

b. The criteria refers to the inorganic form only.

c. Criteria in the matrix based on carcinogenicity (10^{-6} risk). For a risk level of 10^{-5}, move the decimal point in the matrix value one place to the right.

d. Criteria Maximum Concentration (CMC) = the highest concentration of a pollutant to which aquatic life can be exposed for a short period of time (1-hour average) without deleterious effects. Criteria Continuous Concentration (CCC) = the highest concentration of a pollutant to which aquatic life can be exposed for an extended period of time (4 days) without deleterious effects. ug/L = micrograms per liter

e. Freshwater aquatic life criteria for these metals are expressed as a function of total hardness (mg/L as $CaCO_3$), the pollutant's water effect ratio (WER) as defined in § 131.36(c) and multiplied by an appropriate dissolved conversion factor as defined in § 131.36(b)(2). For comparative purposes, the values displayed in this matrix are shown as dissolved metal and correspond to a total hardness of 100 mg/L and a water effect ratio of 1.0.

f. Freshwater aquatic life criteria for pentachlorophenol are expressed as a function of pH, and are calculated as follows. Values displayed above in the matrix correspond to a pH of 7.8.

CMC = exp(1.005(pH) − 4.830) CCC = exp(1.005(pH) − 5.290)

g. Aquatic life criteria for these compounds were issued in 1980 utilizing the 1980 Guidelines for criteria development. The acute values shown are final acute values (FAV) which by the 1980 Guidelines are instantaneous values as contrasted with a CMC which is a one-hour average.

h. These totals simply sum the criteria in each column. For aquatic life, there are 30 priority toxic pollutants with some type of freshwater or saltwater, acute or chronic criteria. For human health, there are 91 priority toxic pollutants with either ''water + fish'' or ''fish only'' criteria. Note that these totals count chromium as one pollutant even though EPA has developed criteria based on two valence states. In the matrix, EPA has assigned numbers 5a and 5b to the criteria for chromium to reflect the fact that the list of 126 priority toxic pollutants includes only a single listing for chromium.

i. If the CCC for total mercury exceeds 0.012 ug/L more than once in a 3-year period in the ambient water, the edible portion of aquatic species of concern must be analyzed to determine whether the concentration of methyl mercury exceeds the FDA action level (1.0 mg/kg). If the FDA action level is exceeded, the State must notify the appropriate EPA Regional Administrator, initiate a revision of its mercury criterion in its water quality standards so as to protect designated uses, and take other appropriate action such as issuance of a fish consumption advisory for the affected area.

j. No criteria for protection of human health from consumption of aquatic organisms (excluding water) was presented in the 1980 criteria document or in the 1986 Quality Criteria for Water. Nevertheless, sufficient information was presented in the 1980 document to allow a calculation of a criterion, even though the results of such a calculation were not shown in the document.

k. The criterion for asbestos is the MCL (56 FR 3526, January 30, 1991).

l. [Reserved: this letter not used as a footnote].

m. Criteria for these metals are expressed as a function of the water effect ratio, WER, as defined in 40 CFR 131.36(c).

CMC = column B1 or C1 value × WER
CCC = column B2 or C2 value × WER

n. EPA is not promulgating human health criteria for this contaminant. However, permit authorities should address this contaminant in NPDES permit actions using the State's existing narrative criteria for toxics.

o. [Reserved: This letter not used as a footnote].

p. Criterion expressed as total recoverable.

General Notes:

1. This chart lists all of EPA's priority toxic pollutants whether or not criteria recommendations are available. Blank spaces indicate the absence of criteria recommendations. Because of variations in chemical nomenclature systems, this listing of toxic pollutants does not duplicate the listing in Appendix A of 40 CFR Part 423. EPA has added the Chemical Abstracts Service (CAS) registry numbers, which provide a unique identification for each chemical.

2. The following chemicals have organoleptic based criteria recommendations that are not included on this chart (for reasons which are discussed in the preamble): copper, zinc, chlorobenzene, 2-chlorophenol, 2,4-dichlorophenol, acenaphthene, 2,4-dimethylphenol, 3-methyl-4-chlorophenol, hexachlorocyclopentadiene, pentachlorophenol, phenol

3. For purposes of this rulemaking, freshwater criteria and saltwater criteria apply as specified in 40 CFR 131.36(c).

Note to paragraph (b)(1): On April 14, 1995, the Environmental Protection Agency issued a stay of certain criteria in paragraph (b)(1) of this section as follows: the criteria in columns B and C for arsenic, cadmium, chromium (VI), copper, lead, nickel, silver, and

zinc; the criteria in B1 and C1 for mercury; the criteria in column B for chromium (III); and the criteria in column C for selenium. The stay remains in effect until further notice.

(2) Factors for Calculating Hardness-Dependent, Freshwater Metals Criteria

$CMC = WER \exp\{m_A[\ln(hardness)] + b_A\} \times$ Acute Conversion Factor

$CCC = WER \exp\{m_C[\ln(hardness)] + b_C\} \times$ Chronic Conversion Factor

Final CMC and CCC values should be rounded to two significant figures.

Metal	m_A	b_A	m_C	b_C	Freshwater conversion factors	
					Acute	Chronic
Cadmium	1.128	–3.828	0.7852	–3.490	[a] 0.944	[a] 0.909
Chromium (III)	0.8190	3.688	0.8190	1.561	0.316	0.860
Copper	0.9422	–1.464	0.8545	–1.465	0.960	0.960
Lead	1.273	-1.460	1.273	–4.705	[a] 0.791	[a] 0.791
Nickel	0.8460	3.3612	0.8460	1.1645	0.998	0.997
Silver	1.72	–6.52	[b] N/A	[b] N/A	0.85	[b] N/A
Zinc	0.8473	0.8604	0.8473	0.7614	0.978	0.986

Note to table: The term ''exp'' represents the base e exponential function.

Footnotes to table:

[a] The freshwater conversion factors (CF) for cadmium and lead are hardness-dependent and can be calculated for any hardness [see limitations in § 131.36(c)(4)] using the following equations:

Cadmium
Acute: CF=1.136672—[(ln hardness)(0.041838)]
Chronic: CF=1.101672—[(ln hardness)(0.041838)]
Lead (Acute and Chronic): CF = 1.46203—[(ln hardness)(0.145712)]

[b] No chronic criteria are available for silver.

(c) *Applicability*. (1) The criteria in paragraph (b) of this section apply to the States' designated uses cited in paragraph (d) of this section and supersede any criteria adopted by the State, except when State regulations contain criteria which are more stringent for a particular use in which case the State's criteria will continue to apply.

(2) The criteria established in this section are subject to the State's general rules of applicability in the same way and to the same extent as are the other numeric toxics criteria when applied to the same use classifications including mixing zones, and low flow values below which numeric standards can be exceeded in flowing fresh waters.

(i) For all waters with mixing zone regulations or implementation procedures, the criteria apply at the appropriate locations within or at the boundary of the mixing zones; otherwise the criteria apply throughout the waterbody including at the end of any discharge pipe, canal or other discharge point.

(ii) A State shall not use a low flow value below which numeric standards can be exceeded that is less stringent than the following for waters suitable for the establishment of low flow return frequencies (i.e., streams and rivers):

AQUATIC LIFE

Acute criteria (CMC)	1 Q 10 or 1 B 3
Chronic criteria (CCC)	7 Q 10 or 4 B 3

HUMAN HEALTH

Non-carcinogens	30 Q 5
Carcinogens	Harmonic mean flow

Where:

CMC—criteria maximum concentration—the water quality criteria to protect against acute effects in aquatic life and is the highest instream concentration of a priority toxic pollutant consisting of a one-hour average not to be exceeded more than once every three years on the average;

CCC—criteria continuous concentration—the water quality criteria to protect against chronic effects in aquatic life is the highest instream concentration of a priority toxic pollutant consisting of a 4-day average not to be exceeded more than once every three years on the average;

1 Q 10 is the lowest one day flow with an average recurrence frequency of once in 10 years determined hydrologically;

1 B 3 is biologically based and indicates an allowable exceedence of once every 3 years. It is determined by EPA's computerized method (DFLOW model);

7 Q 10 is the lowest average 7 consecutive day low flow with an average recurrence frequency of once in 10 years determined hydrologically;

4 B 3 is biologically based and indicates an allowable exceedence for 4 consecutive days once every 3 years. It is determined by EPA's computerized method (DFLOW model);

30 Q 5 is the lowest average 30 consecutive day low flow with an average recurrence frequency of once in 5 years determined hydrologically; and the harmonic mean flow is a long term mean flow value calculated by dividing the number of daily flows analyzed by the sum of the reciprocals of those daily flows.

(iii) If a State does not have such a low flow value for numeric standards compliance, then none shall apply and the criteria included in paragraph (d) of this section herein apply at all flows.

(3) The aquatic life criteria in the matrix in paragraph (b) of this section apply as follows:

(i) For waters in which the salinity is equal to or less than 1 part per thousand 95% or more of the time, the applicable criteria are the freshwater criteria in Column B;

(ii) For waters in which the salinity is equal to or greater than 10 parts per thousand 95% or more of the time, the applicable criteria are the saltwater criteria in Column C; and

(iii) For waters in which the salinity is between 1 and 10 parts per thousand as defined in paragraphs (c)(3) (i) and (ii) of this section, the applicable criteria are the more stringent of the freshwater or saltwater criteria. However, the Regional Administrator may approve the use of the alternative freshwater or saltwater criteria if scientifically defensible information and data demonstrate that on a site-specific basis the biology of the waterbody is dominated by freshwater aquatic life and that freshwater criteria are more appropriate; or conversely, the biology of the waterbody is dominated by saltwater aquatic life and that saltwater criteria are more appropriate.

(4) *Application of metals criteria.* (i) For purposes of calculating freshwater aquatic life criteria for metals from the equations in paragraph (b)(2) of this section, the minimum hardness allowed for use in those equations shall not be less than 25 mg/l, as calcium carbonate, even if the actual ambient hardness is less than 25 mg/l as calcium carbonate. The maximum hardness value for use in those equations shall not exceed 400 mg/l as calcium carbonate, even if the actual ambient hardness is greater than 400 mg/l as calcium carbonate. The same provisions apply for calculating the metals criteria for the comparisons provided for in paragraph (c)(3)(iii) of this section.

(ii) The hardness values used shall be consistent with the design discharge conditions established in paragraph (c)(2) of this section for flows and mixing zones.

(iii) Except where otherwise noted, the criteria for metals (compounds #2, #4–# 11, and #13, in paragraph (b) of this section) are expressed as dissolved metal. For purposes of calculating aquatic life criteria for metals from the equations in footnote m. in the criteria matrix in paragraph (b)(1) of this section and the equations in paragraphs (b)(2) of this section, the water-effect ratio is computed as a specific pollutant's acute or chronic toxicity values measured in water from the site covered by the standard, divided by the respective acute or chronic toxicity value in laboratory dilution water.

(d) *Criteria for Specific Jurisdictions*—(1) *Rhode Island, EPA Region 1.* (i) All waters assigned to the following use classifications in the Water Quality Regulations for Water Pollution Control adopted under Chapters 46–12, 42–17.1, and 42–35 of the General Laws of Rhode Island are subject to the criteria in paragraph (d)(1)(ii) of this section, without exception:

6.21 Freshwater	6.22 Saltwater:
Class A	Class SA
Class B	Class SB
Class C	Class SC

(ii) The following criteria from the matrix in paragraph (b)(1) of this section apply to the use classifications identified in paragraph (d)(1)(i) of this section:

Use classification	Applicable criteria
Class A	
Class B waters where water supply use is designated	These classifications are assigned the criteria in: Column D1—all

Use classification	Applicable criteria
Class B waters where water supply use is not designated; Class C; Class SA; Class SB; Class SC	Each of these classifications is assigned the criteria in: Column D2—all

(iii) The human health criteria shall be applied at the 10^{-5} risk level, consistent with the State policy. To determine appropriate value for carcinogens, see footnote c in the criteria matrix in paragraph (b)(1) of this section.

(2) *Vermont, EPA Region 1.* (i) All waters assigned to the following use classifications in the Vermont Water Quality Standards adopted under the authority of the Vermont Water Pollution Control Act (10 V.S.A., Chapter 47) are subject to the criteria in paragraph (d)(2)(ii) of this section, without exception:

Class A
Class B
Class C

(ii) The following criteria from the matrix in paragraph (b)(1) of this section apply to the use classifications identified in paragraph (d)(2)(i) of this section:

Use classification	Applicable criteria
Class A Class B waters where water supply use is designated	This classification is assigned the criteria in: Column B1—all Column B2—all Column D1—all
Class B waters where water supply use is not designated Class C	These classifications are assigned the criteria in: Column B1—all Column B2—all Column D2—all

(iii) The human health criteria shall be applied at the State-proposed 10^{-6} risk level.

(3) *New Jersey, EPA Region 2.* (i) All waters assigned to the following use classifications in the New Jersey Administrative Code (N.J.A.C.) 7:9–4.1 et seq., Surface Water Quality Standards, are subject to the criteria in paragraph (d)(3)(ii) of this section, without exception.

N.J.A.C. 7:9–4.12(b): Class PL
N.J.A.C. 7:9–4.12(c): Class FW2
N.J.A.C. 7:9–4.12(d): Class SE1
N.J.A.C. 7:9–4.12(e): Class SE2
N.J.A.C. 7:9–4.12(f): Class SE3
N.J.A.C. 7:9–4.12(g): Class SC
N.J.A.C. 7:9–4.13(a): Delaware River Zones 1C, 1D, and 1E
N.J.A.C. 7:9–4.13(b): Delaware River Zone 2
N.J.A.C. 7:9–4.13(c): Delaware River Zone 3
N.J.A.C. 7:9–4.13(d): Delaware River Zone 4
N.J.A.C. 7:9–4.13(e): Delaware River Zone 5
N.J.A.C. 7:9–4.13(f): Delaware River Zone 6

(ii) The following criteria from the matrix in paragraph (b)(1) of this section apply to the use classifications identified in paragraph (d)(3)(i) of this section:

Use classification	Applicable criteria
PL (Freshwater Pinelands), FW2	These classifications are assigned the criteria in: Column B1—all except #102, 105, 107, 108, 111, 112, 113, 115, 117, and 118. Column B2—all except #105, 107, 108, 111, 112, 113, 115, 117, 118, 119, 120, 121, 122, 123, 124, and 125. Column D1—all at a 10^{-6} risk level except #23, 30, 37, 38, 42, 68, 89, 91, 93, 104, 105; #23, 30, 37, 38, 42, 68, 89, 91, 93, 104, 105, at a 10^{-5} risk level. Column D2—all at a 10^{-6} risk level except #23, 30, 37, 38, 42, 68, 89, 91, 93, 104, 105; #23, 30, 37, 38, 42, 68, 89, 91, 93, 104, 105, at a 10^{-5} risk level.
PL (Saline Water Pinelands), SE1, SE2, SE3, SC	These classifications are each assigned the criteria in: Column C1—all except #102, 105, 107, 108, 111, 112, 113, 115, 117, and 118.

Use classification	Applicable criteria
	Column C2—all except #105, 107, 108, 111, 112, 113, 115, 117, 118, 119, 120, 121, 122, 123, 124, and 125. Column D2—all at a 10^{-6} risk level except #23, 30, 37, 38, 42, 68, 89, 91, 93, 104, 105; #23, 30, 37, 38, 42, 68, 89, 91, 93, 104, 105, at a 10^{-5} risk level.
Delaware River zones 1C, 1D, 1E, 2, 3, 4, 5 and Delaware Bay zone 6	These classifications are each assigned the criteria in: Column B1—all. Column B2—all. Column D1—all at a 10^{-6} risk level except #23, 30, 37, 38, 42, 68, 89, 91, 93, 104, 105; #23, 30, 37, 38, 42, 68, 89, 91, 93, 104, 105, at a 10^{-5} risk level. Column D2—all at a 10^{-6} risk level except #23, 30, 37, 38, 42, 68, 89, 91, 93, 104, 105; #23, 30, 37, 38, 42, 68, 89, 91, 93, 104, 105, at a 10^{-5} risk level.
Delaware River zones 3, 4, and 5, and Delaware Bay zone 6	These classifications are each assigned the criteria in: Column C1—all. Column C2—all. Column D2—all at a 10^{-6} risk level except #23, 30, 37, 38, 42, 68, 89, 91, 93, 104, 105; #23, 30, 37, 38, 42, 68, 89, 91, 93, 104, 105, at a 10^{-5} risk level.

(iii) The human health criteria shall be applied at the State-proposed 10^{-6} risk level for EPA rated Class A, B_1, and B_2 carcinogens; EPA rated Class C carcinogens shall be applied at 10^{-5} risk level. To determine appropriate value for carcinogens, see footnote c. in the matrix in paragraph (b)(1) of this section.

(4) *Puerto Rico, EPA Region 2.* (i) All waters assigned to the following use classifications in the Puerto Rico Water Quality Standards (promulgated by Resolution Number R–83–5–2) are subject to the criteria in paragraph (d)(4)(ii) of this section, without exception.

Article 2.2.2—Class SB
Article 2.2.3—Class SC
Article 2.2.4—Class SD

(ii) The following criteria from the matrix in paragraph (b)(1) of this section apply to the use classifications identified in paragraph (d)(4)(i) of this section:

Use classification	Applicable criteria
Class SD	This Classification is assigned criteria in: Column B1—all, except: 10, 102, 105, 107, 108, 111, 112, 113, 115, 117, and 126. Column B2—all, except: 105, 107, 108, 112, 113, 115, and 117. Column D1—all, except: 6, 14, 105, 112, 113, and 115. Column D2—all, except: 14, 105, 112, 113, and 115.
Class SB, Class SC	These Classifications are assigned criteria in: Column C1—all, except: 4, 5b, 7, 8, 10, 11, 13, 102, 105, 107, 108, 111, 112, 113, 115, 117, and 126. Column C2—all, except: 4, 5b, 10, 13, 108, 112, 113, 115, and 117. Column D2—all, except: 14, 105, 112, 113, and 115.

(iii) The human health criteria shall be applied at the State-proposed 10^{-5} risk level. To determine appropriate value for carcinogens, see footnote c, in the criteria matrix in paragraph (b)(1) of this section.

(5) *District of Columbia, EPA Region 3.*

(i) All waters assigned to the following use classifications in chapter 11 Title 21 DCMR, Water Quality Standards of the District of Columbia are subject to the criteria in paragraph

(d)(5)(ii) of this section, without exception:

1101.2 Class C waters

(ii) The following criteria from the matrix in paragraph (b)(1) of this section apply to the use classification identified in paragraph (d)(5)(i) of this section:

Use classification	Applicable criteria
Class C	This classification is assigned the additional criteria in: Column B2—#10, 118, 126. Column D1—#15, 16, 44, 67, 68, 79, 80, 81, 88, 114, 116, 118. Column D2—all.

(iii) The human health criteria shall be applied at the State-adopted 10^{-6} risk level.

(6) *Florida, EPA Region 4.*

(i) All waters assigned to the following use classifications in Chapter 17–301 of the Florida Administrative Code (i.e., identified in Section 17–302.600) are subject to the criteria in paragraph (d)(6)(ii) of this section, without exception:

Class I
Class II
Class III

(ii) The following criteria from the matrix paragraph (b)(1) of this section apply to the use classifications identified in paragraph (d)(6)(i) of this section:

Use classification	Applicable criteria
Class I	This classification is assigned the criteria in: Column D1—#16
Class II Class III (marine)	This classification is assigned the criteria in: Column D2—#16
Class III (freshwater)	This classification is assigned the criteria in: Column D2—#16

(iii) The human health criteria shall be applied at the State-adopted 10^{-6} risk level.

(7) *Michigan, EPA Region 5.*

(i) All waters assigned to the following use classifications in the Michigan Department of Natural Resources Commission General Rules, R 323.1100 designated uses, as defined at R 323.1043. Definitions; A to N, (i.e., identified in Section (g) ''Designated use'') are subject to the criteria in paragraph (d)(7)(ii) of this section, without exception:

Agriculture
Navigation
Industrial Water Supply
Public Water Supply at the Point of Water Intake
Warmwater Fish
Other Indigenous Aquatic Life and Wildlife
Partial Body Contact Recreation

(ii) The following criteria from the matrix in paragraph (b)(1) of this section apply to the use classifications identified in paragraph (d)(7)(i) of this section:

Use classification	Applicable criteria
Public Water supply	This classification is assigned the criteria in: Column B1—all, Column B2—all, Column D1—all.
All other designations	These classifications are assigned the criteria in: Column B1—all, Column B2—all, and Column D2—all.

(iii) The human health criteria shall be applied at the State-adopted 10^{-5} risk level. To determine appropriate value for carcinogens, see footnote c in the criteria matrix in paragraph (b)(1) of this section.

(8) *Arkansas, EPA Region 6.*

(i) All waters assigned to the following use classification in section 4C (Waterbody uses) identified in Arkansas Department of Pollution Control and Ecology's Regulation No. 2 as amended and entitled, ''Regulation Establishing Water Quality Standards for Surface Waters of the State of Arkansas'' are subject to the criteria in paragraph (d)(8)(ii) of this section, without exception:

Extraordinary Resource Waters
Ecologically Sensitive Waterbody
Natural and Scenic Waterways

Fisheries:
(1) Trout
(2) Lakes and Reservoirs
(3) Streams
(a) Ozark Highlands Ecoregion
(b) Boston Mountains Ecoregion
(c) Arkansas River Valley Ecoregion
(d) Ouachita Mountains Ecoregion
(e) Typical Gulf Coastal Ecoregion
(f) Spring Water-influenced Gulf Coastal Ecoregion
(g) Least-altered Delta Ecoregion
(h) Channel-altered Delta Ecoregion
Domestic Water Supply

(ii) The following criteria from the matrix in paragraph (b)(1) of this section apply to the use classification identified in paragraph (d)(8)(i) of this section:

Use classification	Applicable criteria
Extraordinary Resource Waters Ecologically Sensitive Waterbody Natural and Scenic Waterways Fisheries: (1) Trout (2) Lakes and Reservoirs (3) Streams (a) Ozark Highlands Ecoregion (b) Boston Mountains Ecoregion (c) Arkansas River Valley Ecoregion (d) Ouachita Mountains Ecoregion (e) Typical Gulf Coastal Ecoregion (f) Spring Water-influenced Gulf Coastal Ecoregion (g) Least-altered Delta Ecoregion (h) Channel-altered Delta Ecoregion	These uses are each assigned the criteria in— Column B1—#4, 5a, 5b, 6, 7, 8, 9, 10, 11, 13, 14 Column B2—#4, 5a, 5b, 6, 7, 8, 9, 10, 13, 14

(9) *Kansas, EPA Region 7.*

(i) All waters assigned to the following use classification in the Kansas Department of Health and Environment regulations, K.A.R. 28–16–28b through K.A.R. 28–16–28f, are subject to the criteria in paragraph (d)(9)(ii) of this section, without exception.

Section 28–16–28d
Section (2)(A)—Special Aquatic Life Use Waters
Section (2)(B)—Expected Aquatic Life Use Waters
Section (2)(C)—Restricted Aquatic Life Use Waters
Section (3)—Domestic Water Supply
Section (6)(c)—Consumptive Recreation Use.

(ii) The following criteria from the matrix in paragraph (b)(1) of this section apply to the use classifications identified in paragraph (d)(9)(i) of this section:

Use classification	Applicable criteria
Sections (2)(A), (2)(B), (2)(C), (6)(C)	These classifications are each assigned all criteria in: Column B1, all except #9, 11, 13, 102, 105, 107, 108, 111–113, 115, 117, and 126; Column B2, all except #9, 13, 105, 107, 108, 111–113, 115, 117, 119–125, and 126; and Column D2, all except #9, 112, 113, and 115.
Section (3)	This classification is assigned all criteria in; Column D1, all except #9, 12, 112, 113, and 115.

(iii) The human health criteria shall be applied at the State-proposed 10^{-6} risk level.

(10) *California, EPA Region 9.*

(i) All waters assigned any aquatic life or human health use classifications in the Water Quality Control Plans for the various Basins of the State (''Basin Plans''), as amended, adopted by the California State Water Resources Control Board (''SWRCB''), except for ocean waters covered by the Water Quality Control Plan for Ocean Waters of California (''Ocean Plan'') adopted by the SWRCB with resolution Number 90–27 on March 22, 1990, are subject to the criteria in paragraph (d)(10)(ii) of this section, without exception. These

criteria amend the portions of the existing State standards contained in the Basin Plans. More particularly these criteria amend water quality criteria contained in the Basin Plan Chapters specifying water quality objectives (the State equivalent of federal water quality criteria) for the toxic pollutants identified in paragraph (d)(10)(ii) of this section. Although the State has adopted several use designations for each of these waters, for purposes of this action, the specific standards to be applied in paragraph (d)(10)(ii) of this section are based on the presence in all waters of some aquatic life designation and the presence or absence of the MUN use designation (Municipal and domestic supply). (See Basin Plans for more detailed use definitions.)

(ii) The following criteria from the matrix in paragraph (b)(1) of this section apply to the water and use classifications defined in paragraph (d)(10)(i) of this section and identified below:

Water and use classification	Applicable criteria
Waters of the State defined as bays or estuaries except the Sacramento-San Joaquin Delta and San Francisco Bay	These waters are assigned the criteria in: Column B1—pollutants 5a and 14 Column B2—pollutants 5a and 14 Column C1—pollutant 14 Column C2—pollutant 14 Column D2—pollutants 1, 12, 17, 18, 21, 22, 29, 30, 32, 33, 37, 38, 42–44, 46, 48, 49, 54, 59, 66, 67, 68, 78–82, 85, 89, 90, 91, 93, 95, 96, 98
Waters of the Sacramento—San Joaquin Delta and waters of the State defined as inland (i.e., all surface waters of the State not bays or estuaries or ocean) that include a MUN use designation	These waters are assigned the criteria in: Column B1—pollutants 5a and 14 Column B2—pollutants 5a and 14 Column D1—pollutants 1, 12, 15, 17, 18, 21, 22, 29, 30, 32, 33, 37, 38, 42–48, 49, 59, 66, 67, 68, 78–82, 85, 89, 90, 91, 93, 95, 96, 98
Waters of the State defined as inland without an MUN use designation	These waters are assigned the criteria in: Column B1—pollutants 5a and 14 Column B2—pollutants 5a and 14 Column D2—pollutants 1, 12, 17, 18, 21, 22, 29, 30, 32, 33, 37, 38, 42–44, 46, 48, 49, 54, 59, 66, 67, 68, 78–82, 85, 89, 90, 91, 93, 95, 96, 98
Waters of the San Joaquin River from the mouth of the Merced River to Vernalis	

Water and use classification	Applicable criteria
Waters of Salt Slough, Mud Slough (north) and the San Joaquin River, Sack Dam to the mouth of the Merced River	In addition to the criteria assigned to these waters elsewhere in this rule, these waters are assigned the criteria in: Column B2—pollutant 10
Waters of San Francisco Bay upstream to and including Suisun Bay and the Sacramento-San Joaquin Delta	In addition to the criteria assigned to these waters elsewhere in this rule, these waters are assigned the criteria in: Column B1—pollutant 10 Column B2—pollutant 10
All inland waters of the United States or enclosed bays and estuaries that are waters of the United States that include an MUN use designation and that the State has either excluded or partially excluded from coverage under its Water Quality Control Plan for Inland Surface Waters of California, Tables 1 and 2, or its Water Quality Control Plan for Enclosed Bays and Estuaries of California, Tables 1 and 2, or has deferred applicability of those tables. (Category (a), (b), and (c) waters described on page 6 of Water Quality Control Plan for Inland Surface Waters of California or page 6 of its Water Quality Control Plan for Enclosed Bays and Estuaries of California.)	These waters are assigned the criteria in: Column B1—pollutants 5a, 10* and 14 Column B2—pollutants 5a, 10* and 14 Column C1—pollutant 14 Column C2—pollutant 14 Column D2—pollutants 1, 12, 17, 18, 21, 22, 29, 30, 32, 33, 37, 38, 42–44, 46, 48, 49, 54, 59, 66, 67, 68, 78–82, 85, 89, 90, 91, 93, 95, 96, 98
All inland waters of the United States that do not include an MUN use designation and that the State has either excluded or partially excluded from coverage under its Water Quality Control Plan for Inland Surface Waters of California, Tables 1 and 2, or has deferred applicability of these tables. (Category (a), (b), and (c) waters described on page 6 of Water Quality Control Plan for Inland Surface Waters of California.)	These waters are assigned the criteria for pollutants for which the State does not apply Table 1 or 2 standards. These criteria are: Column B1—all pollutants Column B2—all pollutants Column D1—all pollutants except #2
	These waters are assigned the criteria for pollutants for which the State does not apply Table 1 or 2 standards. These criteria are:

Water and use classification	Applicable criteria
All enclosed bays and estuaries that are waters of the United States that do not include an MUN designation and that the State has either excluded or partially excluded from coverage under its Water Quality Control Plan for Inland Surface Waters of California, Tables 1 and 2, or its Water Quality Control Plan for Enclosed Bays and Estuaries of California, Tables 1 and 2, or has deferred applicability of those tables. (Category (a), (b), and (c) waters described on page 6 of Water Quality Control Plan for Inland Surface Waters of California or page 6 of its Water Quality Control Plan for Enclosed Bays and Estuaries of California.)	Column B1—all pollutants Column B2—all pollutants Column D2—all pollutants except #2
	These waters are assigned the criteria for pollutants for which the State does not apply Table 1 or 2 standards. These criteria are: Column B1—all pollutants Column B2—all pollutants Column C1—all pollutants Column C2—all pollutants Column D2—all pollutants except #2

*The fresh water selenium criteria are included for the San Francisco Bay estuary because high levels of bioaccumulation of selenium in the estuary indicate that the salt water criteria are underprotective for San Francisco Bay.

(iii) The human health criteria shall be applied at the State-adopted 10^{-6} risk level.

(11) *Nevada, EPA Region 9.* (i) All waters assigned the use classifications in Chapter 445 of the Nevada Administrative Code (NAC), Nevada Water Pollution Control Regulations, which are referred to in paragraph (d)(11)(ii) of this section, are subject to the criteria in paragraph (d)(11)(ii) of this section, without exception. These criteria amend the existing State standards contained in the Nevada Water Pollution Control Regulations. More particularly, these criteria amend or supplement the table of numeric standards in NAC 445.1339 for the toxic pollutants identified in paragraph (d)(11)(ii) of this section.

(ii) The following criteria from matrix in paragraph (b)(1) of this section apply to the waters defined in paragraph (d)(11)(i) of this section and identified below:

Water and use classification	Applicable criteria
Waters that the State has included in NAC 445.1339 where Municipal or domestic supply is a designated use	These waters are assigned the criteria in: Column B1—pollutant #118 Column B2—pollutant #118 Column D1—pollutants #15, 16, 18, 19, 20, 21, 23, 26, 27, 29, 30, 34, 37, 38, 42, 43, 55, 58–62, 64, 66, 73, 74, 78, 82, 85, 87–89, 91, 92, 96, 98, 100, 103, 104, 105, 114, 116, 117, 118
Waters that the State has included in NAC 445.1339 where Municipal or domestic supply is not a designated use	These waters are assigned the criteria in: Column B1—pollutant #118

Water and use classification	Applicable criteria
	Column B2—pollutant #118 Column D2—all pollutants except #2.

(iii) The human health criteria shall be applied at the 10^{-5} risk level, consistent with State policy. To determine appropriate value for carcinogens, see footnote c in the criteria matrix in paragraph (b)(1) of this section.

(12) *Alaska, EPA Region 10.*

(i) All waters assigned to the following use classifications in the Alaska Administrative Code (AAC), Chapter 18 (i.e., identified in 18 AAC 70.020) are subject to the criteria in paragraph (d)(12)(ii) of this section, without exception:

70.020.(1) (A) Fresh Water
70.020.(1) (A) Water Supply
(i) Drinking, culinary, and food processing,
(iii) Aquaculture;
70.020.(1) (B) Water Recreation
(i) Contact recreation,
(ii) Secondary recreation;
70.020.(1) (C) Growth and propagation of fish, shellfish, other aquatic life, and wildlife
70.020.(2) (A) Marine Water
70.020.(2) (A) Water Supply
(i) Aquaculture,
70.020.(2) (B) Water Recreation
(i) contact recreation,
(ii) secondary recreation;
70.020.(2) (C) Growth and propagation of fish, shellfish, other aquatic life, and wildlife;
70.020.(2) (D) Harvesting for consumption of raw mollusks or other raw aquatic life.

(ii) The following criteria from the matrix in paragraph (b)(1) of this section apply to the use classifications identified in paragraph (d)(12)(i) of this section:

Use classification	Applicable criteria
(1)(A) i	Column B1—all Column B2—#10 Column D1 #'s 2, 16, 18–21, 23, 26, 27, 29, 30, 32, 37, 38, 42–44, 53, 55, 59–62, 64, 66, 68, 73, 74, 78, 82, 85, 88, 89, 91–93, 96, 98, 102–105, 107–111, 117–126
(1)(A) iii	Column B1—all Column B2—#10 Column D2 #'s 2, 14, 16, 18–21, 22, 23, 26, 27, 29, 30, 32, 37, 38, 42–44, 46, 53, 54, 55, 59–62, 64, 66, 68, 73, 74, 78, 82, 85, 88–93, 95, 96, 98, 102–105, 107–111, 115–126
(1)(B)i, (1)(B) ii, (1)(C)	Column B1—all Column B2—#10 Column D2 #'s 2, 14, 16, 18–21, 22, 23, 26, 27, 29, 30, 32, 37, 38, 42–44, 46, 53, 54, 55, 59–62, 64, 66, 68, 73, 74, 78, 82, 85, 88–93, 95, 96, 98, 102–105, 107–111, 115–126
(2)(A) i, (2)(B)i, and (2)(B)ii, (2)(C), (2)(D)	Column C1—all Column C2—#10 Column D2 #s 2, 14, 16, 18–21, 22, 23, 26, 27, 29, 30, 32, 37, 38, 42–44, 46, 53, 54, 55, 59–62, 64, 66, 68, 73, 74, 78, 82, 85, 88–93, 95, 96, 98, 102–105, 107–111, 115–126

(iii) The human health criteria shall be applied at the State-proposed risk level of 10^{-5}. To determine appropriate value for carcinogens, see footnote c in the criteria matrix in paragraph (b)(1) of this section.

(13) *Idaho, EPA Region 10.*

(i) All waters assigned to the following use classifications in the Idaho Administrative Procedures Act (IDAPA), Chapter 16 (i.e., identified in IDAPA 16.01.2100,02–16.01.2100,07) are subject to the criteria in paragraph (d)(13)(ii) of this section, without exception:

16.01.2100.01.b. Domestic Water Supplies
16.01.2100.02.a. Cold Water Biota
16.01.2100.02.b. Warm Water Biota
16.01.2100.02cc. Salmonid Spawning
16.01.2100.03.a. Primary Contact Recreation
16.01.2100.03.b Secondary Contact Recreation

(ii) The following criteria from the matrix in paragraph (b)(1) of this section apply to the use classifications identified in paragraph (d)(13)(i) of this section:

Use classification	Applicable criteria
01.b	This classification is assigned the criteria in: Column D1—#2
02.a 02.b 02cc	These classifications are assigned the criteria in: Column B1—all Column B2—all Column D2—#2
03.a	This classification is assigned the criteria in: Column D2—#2
03.b	This classification is assigned the criteria in: Column D2—#2

(iii) The human health criteria shall be applied at the 10^{-6} risk level, consistent with State policy.

(14) *Washington, EPA Region 10.*

(i) All waters assigned to the following use classifications in the Washington Administrative Code (WAC), Chapter 173–201 (i.e., identified in WAC 173–201–045) are subject to the criteria in paragraph (d)(14)(ii) of this section, without exception:

173–201–045
Fish and Shellfish
Fish
Water Supply (domestic)
Recreation

(ii) The following criteria from the matrix in paragraph (b)(1) of this section apply to the use classifications identified in paragraph (d)(14)(i) of this section:

Use classification	Applicable criteria
Fish and Shellfish; Fish	These classifications are assigned the criteria in: Column C2—6, 14 Column D2—all
Water Supply (domestic)	These classifications are assigned the criteria in: Column D1—all
Recreation	This classification is assigned the criteria in: Column D2—Marine waters and freshwaters not protected for domestic water supply

(iii) The human health criteria shall be applied at the State proposed risk level of 10^{-6}.

[57 FR 60910, Dec. 22, 1992; 58 FR 31177, June 1, 1993, as amended at 58 FR 34499, June 25, 1993; 58 FR 36142, July 6, 1993; 60 FR 22229, 22235, May 4, 1995; 60 FR 44120, Aug. 24, 1995; 61 FR 60617, Nov. 29, 1996]

§ 131.37 California.

(a) *Additional criteria.* The following criteria are applicable to waters specified in the Water Quality Control Plan for Salinity for the San Francisco Bay/Sacramento-San Joaquin Delta Estuary, adopted by the California State Water Resources Control Board in State Board Resolution No. 91–34 on May 1, 1991:

(1) *Estuarine habitat criteria.* (i) *General rule.* (A) Salinity (measured at the surface) shall not exceed 2640 micromhos/centimeter specific conductance at 25 °C (measured as a 14-day moving average) at the Confluence of the Sacramento and San Joaquin Rivers throughout the period each year from February 1 through June 30, and shall not exceed 2640 micromhos/centimeter specific conductance at 25 °C (measured as a 14-day moving average) at the specific locations noted in Table 1 near Roe Island and Chipps Island for the number of days each month in the February 1 to June 30 period computed by reference to the following formula:

Number of days required in Month X = Total number of days in Month X * $(1–1/(1+e^{K})$

where K = A + (B*natural logarithm of the previous month's 8-River Index);

A and B are determined by reference to Table 1 for the Roe Island and Chipps Island locations;

x is the calendar month in the February 1 to June 30 period;

and e is the base of the natural (or Napierian) logarithm.

Where the number of days computed in this equation in paragraph (a)(1)(i)(A) of this section shall be rounded to the nearest whole number of days. When the previous month's 8-River Index is less than 500,000 acre-feet, the number of days required for the current month shall be zero.

TABLE 1. CONSTANTS APPLICABLE TO EACH OF THE MONTHLY EQUATIONS TO DETERMINE MONTHLY REQUIREMENTS DESCRIBED.

Month X	Chipps Island		Roe Island (if triggered)	
	A	B	A	B
Feb	–[1]	–[1]	–14.36	+2.068
Mar	–105.16	+15.943	–20.79	+2.741
Apr	–47.17	+6.441	–28.73	+3.783
May	–94.93	+13.662	–54.22	+6.571
June	–81.00	+9.961	–92.584	+10.699

[1] Coefficients for A and B are not provided at Chipps Island for February, because the 2640 micromhos/cm specific conductance criteria must be maintained at Chipps Island throughout February under all historical 8-River Index values for January.

(B) The Roe Island criteria apply at the salinity measuring station maintained by the U.S. Bureau of Reclamation at Port Chicago (km 64). The Chipps Island criteria apply at the Mallard Slough Monitoring Site, Station D–10 (RKI RSAC–075) maintained by the California Department of Water Resources. The Confluence criteria apply at the Collinsville Continuous Monitoring Station C–2 (RKI RSAC–081) maintained by the California Department of Water Resources.

(ii) *Exception.* The criteria at Roe Island shall be required for any given month only if the 14-day moving average salinity at Roe Island falls below 2640 micromhos/centimeter specific conductance on any of the last 14 days of the previous month.

(2) *Fish migration criteria.* (i) *General rule.*

(A) *Sacramento River.* Measured Fish Migration criteria values for the Sacramento River shall be at least the following:

At temperatures less than below 61°F: SRFMC = 1.35

At temperatures between 61°F and 72 °F: SRFMC = 6.96–.092 * Fahrenheit temperature

At temperatures greater than 72 °F: SRFMC = 0.34

where SRFMC is the Sacramento River Fish Migration criteria value. Temperature shall be the water temperature at release of tagged salmon smolts into the Sacramento River at Miller Park.

(B) *San Joaquin River.* Measured Fish Migration criteria values on the San Joaquin River shall be at least the following:

For years in which the SJVIndex is > 2.5: SJFMC = (−0.012) + 0.184*SJVIndex

In other years: SJFMC = 0.205 + 0.0975*SJVIndex

where SJFMC is the San Joaquin River Fish Migration criteria value, and SJVIndex is the San Joaquin Valley Index in million acre feet (MAF)

(ii) *Computing fish migration criteria values for Sacramento River.* In order to assess fish migration criteria values for the Sacramento River, tagged fall-run salmon smolts will be released into the Sacramento River at Miller Park and captured at Chipps Island, or alternatively released at Miller Park and Port Chicago and recovered from the ocean fishery, using the methodology described in this paragraph (a)(2)(ii). An alternative methodology for computing fish migration criteria values can be used so long as the revised methodology is calibrated with the methodology described in this paragraph (a)(2)(ii) so as to maintain the validity of the relative index values. Sufficient releases shall be made each year to provide a statistically reliable verification of compliance with the criteria. These criteria will be considered attained when the sum of the differences between the measured experimental value and the stated criteria value (i.e., measured value minus stated value) for each experimental release conducted over a three year period (the current year and the previous two years) shall be greater than or equal to zero. Fish for release are to be tagged at the hatchery with coded-wire tags, and fin clipped. Approximately 50,000 to 100,000 fish of smolt size (size greater than 75 mm) are released for each survival index estimate, depending on expected mortality. As a control for the

ocean recovery survival index, one or two groups per season are released at Benecia or Pt. Chicago. From each upstream release of tagged fish, fish are to be caught over a period of one to two weeks at Chipps Island. Daylight sampling at Chipps Island with a 9.1 by 7.9 m, 3.2 mm cod end, midwater trawl is begun 2 to 3 days after release. When the first fish is caught, full-time trawling 7 days a week should begin. Each day's trawling consists of ten 20 minute tows generally made against the current, and distributed equally across the channel.

(A) The Chipps Island smolt survival index is calculated as:

$$SSI=R\div MT(0.007692)$$

where R=number of recaptures of tagged fish

M=number of marked (tagged) fish released

T=proportion of time sampled vs total time tagged fish were passing the site (i.e. time between first and last tagged fish recovery)

Where the value 0.007692 is the proportion of the channel width fished by the trawl, and is calculated as trawl width/channel width.

(B) Recoveries of tagged fish from the ocean salmon fishery two to four years after release are also used to calculate a survival index for each release. Smolt survival indices from ocean recoveries are calculated as:

$$OSI=R_1/M_1\div R_2/M_2$$

where R_1=number of tagged adults recovered from the upstream release

M_1=number released upstream

R_2=number of tagged adults recovered from the Port Chicago release

M_2=number released at Port Chicago

(*1*) The number of tagged adults recovered from the ocean fishery is provided by the Pacific States Marine Fisheries Commission, which maintains a port sampling program.

(*2*) [*Reserved*]

(iii) *Computing fish migration criteria values for San Joaquin River.* In order to assess annual fish migration criteria values for the San Joaquin River, tagged salmon smolts will be released into the San Joaquin River at Mossdale and captured at Chipps Island, or alternatively released at Mossdale and Port Chicago and recovered from the ocean fishery, using the methodology described in paragraph (a)(2)(iii). An alternative methodology for computing fish migration criteria values can be used so long as the revised methodology is calibrated with the methodology described below so as to maintain the validity of the relative index values. Sufficient releases shall be made each year to provide a statistically reliable estimate of the SJFMC for the year. These criteria will be considered attained when the sum of the differences between the measured experimental value and the stated criteria value (i.e., measured value minus stated value) for each experimental release conducted over a three year period (the current year and the previous two years) shall be greater than or equal to zero.

(A) Fish for release are to be tagged at the hatchery with coded-wire tags, and fin clipped. Approximately 50,000 to 100,000 fish of smolt size (size greater than 75 mm) are released for each survival index estimate, depending on expected mortality. As a control for the ocean recovery survival index, one or two groups per season are released at Benicia or Pt. Chicago. From each upstream release of tagged fish, fish are to be caught over a period of one to two weeks at Chipps Island. Daylight sampling at Chipps Island with a 9.1 by 7.9 m, 3.2 mm cod end, midwater trawl is begun 2 to 3 days after release. When the first fish is caught, full-time trawling 7 days a week should begin. Each day's trawling consists of ten 20 minute tows generally made against the current, and distributed equally across the channel.

(B) The Chipps Island smolt survival index is calculated as:

$$SSI=R\div MT(0.007692)$$

where R=number of recaptures of tagged fish

M=number of marked (tagged) fish released

T=proportion of time sampled vs total time tagged fish were passing the site (i.e. time between first and last tagged fish recovery)

Where the value 0.007692 is the proportion of the channel width fished by the trawl, and is calculated as trawl width/channel width.

(C) Recoveries of tagged fish from the ocean salmon fishery two to four years

after release are also used to calculate a survival index for each release. Smolt survival indices from ocean recoveries are calculated as:

$OSI = R_1/M_1 \div R_2/M_2$

where R_1=number of tagged adults recovered from the upstream release

M_1=number released upstream

R_2=number of tagged adults recovered from the Port Chicago release

M_2=number released at Port Chicago

(*1*) The number of tagged adults recovered from the ocean fishery is provided by the Pacific States Marine Fisheries Commission, which maintains a port sampling program.

(*2*) [*Reserved*]

(3) *Suisun marsh criteria.* (i) Water quality conditions sufficient to support a natural gradient in species composition and wildlife habitat characteristic of a brackish marsh throughout all elevations of the tidal marshes bordering Suisun Bay shall be maintained. Water quality conditions shall be maintained so that none of the following occurs: Loss of diversity; conversion of brackish marsh to salt marsh; for animals, decreased population abundance of those species vulnerable to increased mortality and loss of habitat from increased water salinity; or for plants, significant reduction in stature or percent cover from increased water or soil salinity or other water quality parameters.

(ii) [Reserved]

(b) *Revised criteria.* The following criteria are applicable to state waters specified in Table 1–1, at Section (C)(3) (''Striped Bass—Salinity : 3. Prisoners Point—Spawning) of the Water Quality Control Plan for Salinity for the San Francisco Bay—Sacramento/San Joaquin Delta Estuary, adopted by the California State Water Resources Control Board in State Board Resolution No. 91–34 on May 1, 1991:

Location	Sampling site Nos (I–-A/RKI)	Parameter	Description	Index type	San Joaquin Valley Index	Dates	Values
San Joaquin River at Jersey Point, San Andreas Landing, Prisoners Point, Buckley Cove, Rough and Ready Island, Brandt Bridge, Mossdale, and Vernalis.	D15/RSAN018, C4/RSAN032, D29/RSAN038, P8/RSAN056, -/RSAN062, C6/RSAN073, C7/RSAN087, C10/RSAN112	Specific ..... Conductance. @ 25 °C ...	14-day running average of mean daily for the period not more than value shown, in mmhos.	Not Applicable.	>2.5 MAF	April 1 to May 31.	0.44 micromhos.
San Joaquin River at Jersey Point, San Andreas Landing and Prisoners Point.	D15/RSAN018, C4/RSAN032, D29/RSAN038	Specific Conductance.	14-day running average of mean daily for the period not more than value shown, in mmhos.	Not Applicable.	≤2.5 MAF	April 1 to May 31.	0.44 micromhos.

(c) *Definitions.* Terms used in paragraphs (a) and (b) of this section, shall be defined as follows:

(1) *Water year.* A water year is the twelve calendar months beginning October 1.

(2) *8-River Index.* The flow determinations are made and are published by the California Department of Water Resources in Bulletin 120. The 8-River Index shall be computed as the sum of flows at the following stations:

(i) Sacramento River at Band Bridge, near Red Bluff;

(ii) Feather River, total inflow to Oroville Reservoir;

(iii) Yuba River at Smartville;

(iv) American River, total inflow to Folsom Reservoir;

(v) Stanislaus River, total inflow to New Melones Reservoir;

(vi) Tuolumne River, total inflow to Don Pedro Reservoir;

(vii) Merced River, total inflow to Exchequer Reservoir; and

(viii) San Joaquin River, total inflow to Millerton Lake.

(3) *San Joaquin Valley Index.* (i) The San Joaquin Valley Index is computed according to the following formula:

I_{SJ}=0.6X+0.2Y and 0.2Z

where I_{SJ}=San Joaquin Valley Index

X=Current year's April–July San Joaquin Valley unimpaired runoff

Y=Current year's October–March San Joaquin Valley unimpaired runoff

Z=Previous year's index in MAF, not to exceed 0.9 MAF

(ii) *Measuring San Joaquin Valley unimpaired runoff.* San Joaquin Valley unimpaired runoff for the current water year is a forecast of the sum of the following locations: Stanislaus River, total flow to New Melones Reservoir; Tuolumne River, total inflow to Don Pedro Reservoir; Merced River, total flow to Exchequer Reservoir; San Joaquin River, total inflow to Millerton Lake.

(4) *Salinity.* Salinity is the total concentration of dissolved ions in water. It shall be measured by specific conductance in accordance with the procedures set forth in 40 CFR 136.3, Table 1B, Parameter 64.

[60 FR 4707, Jan. 24, 1995]

PART 132—WATER QUALITY GUIDANCE FOR THE GREAT LAKES SYSTEM

Sec.

132.1 Scope, purpose, and availability of documents.
132.2 Definitions.
132.3 Adoption of criteria.
132.4 State adoption and application of methodologies, policies and procedures.
132.5 Procedures for adoption and EPA review.
132.6 Application of part 132 requirements in Great Lakes States and Tribes. [Reserved]

TABLES TO PART 132

APPENDIX A TO PART 132—GREAT LAKES WATER QUALITY INITIATIVE METHODOLOGIES FOR DEVELOPMENT OF AQUATIC LIFE CRITERIA AND VALUES
APPENDIX B TO PART 132—GREAT LAKES WATER QUALITY INITIATIVE METHODOLOGY FOR DEVELOPMENT OF BIOACCUMULATION FACTORS
APPENDIX C TO PART 132—GREAT LAKES WATER QUALITY INITIATIVE METHODOLOGY FOR DEVELOPMENT OF HUMAN HEALTH CRITERIA AND VALUES
APPENDIX D TO PART 132—GREAT LAKES WATER QUALITY INITIATIVE METHODOLOGY FOR THE DEVELOPMENT OF WILDLIFE CRITERIA
APPENDIX E TO PART 132—GREAT LAKES WATER QUALITY INITIATIVE ANTIDEGRADATION POLICY
APPENDIX F TO PART 132—GREAT LAKES WATER QUALITY INITIATIVE IMPLEMENTATION PROCEDURES

AUTHORITY: 33 U.S.C. 1251 *et seq.*

SOURCE: 60 FR 15387, Mar. 23, 1995, unless otherwise noted.

§ 132.1 Scope, purpose, and availability of documents.

(a) This part constitutes the Water Quality Guidance for the Great Lakes System (Guidance) required by section 118(c)(2) of the Clean Water Act (33 U.S.C. 1251 *et seq.*) as amended by the Great Lakes Critical Programs Act of 1990 (Pub. L. 101–596, 104 Stat. 3000 *et seq.*). The Guidance in this part identifies minimum water quality standards, antidegradation policies, and implementation procedures for the Great Lakes System to protect human health, aquatic life, and wildlife.

(b) The U.S. Environmental Protection Agency, Great Lakes States, and Great Lakes Tribes will use the Guidance in this part to evaluate the water quality programs of the States and Tribes to assure that they are protective of water quality. State and Tribal programs do not need to be identical to the Guidance in this part, but must contain provisions that are consistent with (as protective as) the Guidance in

this part. The scientific, policy and legal basis for EPA's development of each section of the final Guidance in this part is set forth in the preamble, Supplementary Information Document, Technical Support Documents, and other supporting documents in the public docket. EPA will follow the guidance set out in these documents in reviewing the State and Tribal water quality programs in the Great Lakes for consistency with this part.

(c) The Great Lakes States and Tribes must adopt provisions consistent with the Guidance in this part applicable to waters in the Great Lakes System or be subject to EPA promulgation of its terms pursuant to this part.

(d) EPA understands that the science of risk assessment is rapidly improving. Therefore, to ensure that the scientific basis for the methodologies in appendices A through D are always current and peer reviewed, EPA will review the methodologies and revise them, as appropriate, every 3 years.

(e) Certain documents referenced in the appendixes to this part with a designation of NTIS and/or ERIC are available for a fee upon request to the National Technical Information Center (NTIS), U.S. Department of Commerce, 5285 Port Royal Road, Springfield, VA 22161. Alternatively, copies may be obtained for a fee upon request to the Educational Resources Information Center/Clearinghouse for Science, Mathematics, and Environmental Education (ERIC/CSMEE), 1200 Chambers Road, Room 310, Columbus, Ohio 43212. When ordering, please include the NTIS or ERIC/CSMEE accession number.

§132.2 Definitions.

The following definitions apply in this part. Terms not defined in this section have the meaning given by the Clean Water Act and EPA implementing regulations.

Acute-chronic ratio (ACR) is a standard measure of the acute toxicity of a material divided by an appropriate measure of the chronic toxicity of the same material under comparable conditions.

Acute toxicity is concurrent and delayed adverse effect(s) that results from an acute exposure and occurs within any short observation period which begins when the exposure begins, may extend beyond the exposure period, and usually does not constitute a substantial portion of the life span of the organism.

Adverse effect is any deleterious effect to organisms due to exposure to a substance. This includes effects which are or may become debilitating, harmful or toxic to the normal functions of the organism, but does not include nonharmful effects such as tissue discoloration alone or the induction of enzymes involved in the metabolism of the substance.

Bioaccumulation is the net accumulation of a substance by an organism as a result of uptake from all environmental sources.

Bioaccumulation factor (BAF) is the ratio (in L/kg) of a substance's concentration in tissue of an aquatic organism to its concentration in the ambient water, in situations where both the organism and its food are exposed and the ratio does not change substantially over time.

Bioaccumulative chemical of concern (BCC) is any chemical that has the potential to cause adverse effects which, upon entering the surface waters, by itself or as its toxic transformation product, accumulates in aquatic organisms by a human health bioaccumulation factor greater than 1000, after considering metabolism and other physicochemical properties that might enhance or inhibit bioaccumulation, in accordance with the methodology in appendix B of this part. Chemicals with half-lives of less than eight weeks in the water column, sediment, and biota are not BCCs. The minimum BAF information needed to define an organic chemical as a BCC is either a field-measured BAF or a BAF derived using the BSAF methodology. The minimum BAF information needed to define an inorganic chemical, including an organometal, as a BCC is either a field-measured BAF or a laboratory-measured BCF. BCCs include, but are not limited to, the pollutants identified as BCCs in section A of Table 6 of this part.

Bioconcentration is the net accumulation of a substance by an aquatic organism as a result of uptake directly from the ambient water through gill

membranes or other external body surfaces.

Bioconcentration factor (BCF) is the ratio (in L/kg) of a substance's concentration in tissue of an aquatic organism to its concentration in the ambient water, in situations where the organism is exposed through the water only and the ratio does not change substantially over time.

Biota-sediment accumulation factor (BSAF) is the ratio (in kg of organic carbon/kg of lipid) of a substance's lipid-normalized concentration in tissue of an aquatic organism to its organic carbon-normalized concentration in surface sediment, in situations where the ratio does not change substantially over time, both the organism and its food are exposed, and the surface sediment is representative of average surface sediment in the vicinity of the organism.

Carcinogen is a substance which causes an increased incidence of benign or malignant neoplasms, or substantially decreases the time to develop neoplasms, in animals or humans. The classification of carcinogens is discussed in section II.A of appendix C to part 132.

Chronic toxicity is concurrent and delayed adverse effect(s) that occurs only as a result of a chronic exposure.

Connecting channels of the Great Lakes are the Saint Mary's River, Saint Clair River, Detroit River, Niagara River, and Saint Lawrence River to the Canadian Border.

Criterion continuous concentration (CCC) is an estimate of the highest concentration of a material in the water column to which an aquatic community can be exposed indefinitely without resulting in an unacceptable effect.

Criterion maximum concentration (CMC) is an estimate of the highest concentration of a material in the water column to which an aquatic community can be exposed briefly without resulting in an unacceptable effect.

EC50 is a statistically or graphically estimated concentration that is expected to cause one or more specified effects in 50 percent of a group of organisms under specified conditions.

Endangered or threatened species are those species that are listed as endangered or threatened under section 4 of the Endangered Species Act.

Existing Great Lakes discharger is any building, structure, facility, or installation from which there is or may be a ''discharge of pollutants'' (as defined in 40 CFR 122.2) to the Great Lakes System, that is not a new Great Lakes discharger.

Federal Indian reservation, Indian reservation, or *reservation* means all land within the limits of any Indian reservation under the jurisdiction of the United States Government, notwithstanding the issuance of any patent, and including rights-of-way running through the reservation.

Final acute value (FAV) is (a) a calculated estimate of the concentration of a test material such that 95 percent of the genera (with which acceptable acute toxicity tests have been conducted on the material) have higher GMAVs, or (b) the SMAV of an important and/or critical species, if the SMAV is lower than the calculated estimate.

Final chronic value (FCV) is (a) a calculated estimate of the concentration of a test material such that 95 percent of the genera (with which acceptable chronic toxicity tests have been conducted on the material) have higher GMCVs, (b) the quotient of an FAV divided by an appropriate acute-chronic ratio, or (c) the SMCV of an important and/or critical species, if the SMCV is lower than the calculated estimate or the quotient, whichever is applicable.

Final plant value (FPV) is the lowest plant value that was obtained with an important aquatic plant species in an acceptable toxicity test for which the concentrations of the test material were measured and the adverse effect was biologically important.

Genus mean acute value (GMAV) is the geometric mean of the SMAVs for the genus.

Genus mean chronic value (GMCV) is the geometric mean of the SMCVs for the genus.

Great Lakes means Lake Ontario, Lake Erie, Lake Huron (including Lake St. Clair), Lake Michigan, and Lake Superior; and the connecting channels (Saint Mary's River, Saint Clair River, Detroit River, Niagara River, and

Saint Lawrence River to the Canadian Border).

Great Lakes States and Great Lakes Tribes, or Great Lakes States and Tribes means the States of Illinois, Indiana, Michigan, Minnesota, New York, Ohio, Pennsylvania, and Wisconsin, and any Indian Tribe as defined in this part which is located in whole or in part within the drainage basin of the Great Lakes, and for which EPA has approved water quality standards under section 303 of the Clean Water Act or which EPA has authorized to administer an NPDES program under section 402 of the Clean Water Act.

Great Lakes System means all the streams, rivers, lakes and other bodies of water within the drainage basin of the Great Lakes within the United States.

Human cancer criterion (HCC) is a Human Cancer Value (HCV) for a pollutant that meets the minimum data requirements for Tier I specified in appendix C of this part.

Human cancer value (HCV) is the maximum ambient water concentration of a substance at which a lifetime of exposure from either: drinking the water, consuming fish from the water, and water-related recreation activities; or consuming fish from the water, and water-related recreation activities, will represent a plausible upper-bound risk of contracting cancer of one in 100,000 using the exposure assumptions specified in the Methodologies for the Development of Human Health Criteria and Values in appendix C of this part.

Human noncancer criterion (HNC) is a Human Noncancer Value (HNV) for a pollutant that meets the minimum data requirements for Tier I specified in appendix C of this part.

Human noncancer value (HNV) is the maximum ambient water concentration of a substance at which adverse noncancer effects are not likely to occur in the human population from lifetime exposure via either: drinking the water, consuming fish from the water, and water-related recreation activities; or consuming fish from the water, and water-related recreation activities using the Methodologies for the Development of Human Health Criteria and Values in appendix C of this part.

Indian Tribe or *Tribe* means any Indian Tribe, band, group, or community recognized by the Secretary of the Interior and exercising governmental authority over a Federal Indian reservation.

LC50 is a statistically or graphically estimated concentration that is expected to be lethal to 50 percent of a group of organisms under specified conditions.

Load allocation (LA) is the portion of a receiving water's loading capacity that is attributed either to one of its existing or future nonpoint sources or to natural background sources, as more fully defined at 40 CFR 130.2(g). Nonpoint sources include: in-place contaminants, direct wet and dry deposition, groundwater inflow, and overland runoff.

Loading capacity is the greatest amount of loading that a water can receive without violating water quality standards.

Lowest observed adverse effect level (LOAEL) is the lowest tested dose or concentration of a substance which resulted in an observed adverse effect in exposed test organisms when all higher doses or concentrations resulted in the same or more severe effects.

Method detection level is the minimum concentration of an analyte (substance) that can be measured and reported with a 99 percent confidence that the analyte concentration is greater than zero as determined by the procedure set forth in appendix B of 40 CFR part 136.

Minimum Level (ML) is the concentration at which the entire analytical system must give a recognizable signal and acceptable calibration point. The ML is the concentration in a sample that is equivalent to the concentration of the lowest calibration standard analyzed by a specific analytical procedure, assuming that all the method-specified sample weights, volumes and processing steps have been followed.

New Great Lakes discharger is any building, structure, facility, or installation from which there is or may be a ''discharge of pollutants'' (as defined in 40 CFR 122.2) to the Great Lakes System, the construction of which commenced after March 23, 1997.

No observed adverse effect level (NOAEL) is the highest tested dose or concentration of a substance which resulted in no observed adverse effect in exposed test organisms where higher doses or concentrations resulted in an adverse effect.

No observed effect concentration (NOEC) is the highest concentration of toxicant to which organisms are exposed in a full life-cycle or partial life-cycle (short-term) test, that causes no observable adverse effects on the test organisms (i.e., the highest concentration of toxicant in which the values for the observed responses are not statistically significantly different from the controls).

Open waters of the Great Lakes (OWGLs) means all of the waters within Lake Erie, Lake Huron (including Lake St. Clair), Lake Michigan, Lake Ontario, and Lake Superior lakeward from a line drawn across the mouth of tributaries to the Lakes, including all waters enclosed by constructed breakwaters, but not including the connecting channels.

Quantification level is a measurement of the concentration of a contaminant obtained by using a specified laboratory procedure calibrated at a specified concentration above the method detection level. It is considered the lowest concentration at which a particular contaminant can be quantitatively measured using a specified laboratory procedure for monitoring of the contaminant.

Quantitative structure activity relationship (QSAR) or structure activity relationship (SAR) is a mathematical relationship between a property (activity) of a chemical and a number of descriptors of the chemical. These descriptors are chemical or physical characteristics obtained experimentally or predicted from the structure of the chemical.

Risk associated dose (RAD) is a dose of a known or presumed carcinogenic substance in (mg/kg)/day which, over a lifetime of exposure, is estimated to be associated with a plausible upper bound incremental cancer risk equal to one in 100,000.

Species mean acute value (SMAV) is the geometric mean of the results of all acceptable flow-through acute toxicity tests (for which the concentrations of the test material were measured) with the most sensitive tested life stage of the species. For a species for which no such result is available for the most sensitive tested life stage, the SMAV is the geometric mean of the results of all acceptable acute toxicity tests with the most sensitive tested life stage.

Species mean chronic value (SMCV) is the geometric mean of the results of all acceptable life-cycle and partial life-cycle toxicity tests with the species; for a species of fish for which no such result is available, the SMCV is the geometric mean of all acceptable early life-stage tests.

Stream design flow is the stream flow that represents critical conditions, upstream from the source, for protection of aquatic life, human health, or wildlife.

Threshold effect is an effect of a substance for which there is a theoretical or empirically established dose or concentration below which the effect does not occur.

Tier I criteria are numeric values derived by use of the Tier I methodologies in appendixes A, C and D of this part, the methodology in appendix B of this part, and the procedures in appendix F of this part, that either have been adopted as numeric criteria into a water quality standard or are used to implement narrative water quality criteria.

Tier II values are numeric values derived by use of the Tier II methodologies in appendixes A and C of this part, the methodology in appendix B of this part, and the procedures in appendix F of this part, that are used to implement narrative water quality criteria.

Total maximum daily load (TMDL) is the sum of the individual wasteload allocations for point sources and load allocations for nonpoint sources and natural background, as more fully defined at 40 CFR 130.2(i). A TMDL sets and allocates the maximum amount of a pollutant that may be introduced into a water body and still assure attainment and maintenance of water quality standards.

Tributaries of the Great Lakes System means all waters of the Great Lakes System that are not open waters of the Great Lakes, or connecting channels.

Uncertainty factor (UF) is one of several numeric factors used in operationally deriving criteria from experimental data to account for the quality or quantity of the available data.

Uptake is acquisition of a substance from the environment by an organism as a result of any active or passive process.

Wasteload allocation (WLA) is the portion of a receiving water's loading capacity that is allocated to one of its existing or future point sources of pollution, as more fully defined at 40 CFR 130.2(h). In the absence of a TMDL approved by EPA pursuant to 40 CFR 130.7 or an assessment and remediation plan developed and approved in accordance with procedure 3.A of appendix F of this part, a WLA is the allocation for an individual point source, that ensures that the level of water quality to be achieved by the point source is derived from and complies with all applicable water quality standards.

Wet weather point source means any discernible, confined and discrete conveyance from which pollutants are, or may be, discharged as the result of a wet weather event. Discharges from wet weather point sources shall include only: discharges of storm water from a municipal separate storm sewer as defined at 40 CFR 122.26(b)(8); storm water discharge associated with industrial activity as defined at 40 CFR 122.26(b)(14); discharges of storm water and sanitary wastewaters (domestic, commercial, and industrial) from a combined sewer overflow; or any other stormwater discharge for which a permit is required under section 402(p) of the Clean Water Act. A storm water discharge associated with industrial activity which is mixed with process wastewater shall not be considered a wet weather point source.

§132.3 Adoption of criteria.

The Great Lakes States and Tribes shall adopt numeric water quality criteria for the purposes of section 303(c) of the Clean Water Act applicable to waters of the Great Lakes System in accordance with §132.4(d) that are consistent with:

(a) The acute water quality criteria for protection of aquatic life in Table 1 of this part, or a site-specific modification thereof in accordance with procedure 1 of appendix F of this part;

(b) The chronic water quality criteria for protection of aquatic life in Table 2 of this part, or a site-specific modification thereof in accordance with procedure 1 of appendix F of this part;

(c) The water quality criteria for protection of human health in Table 3 of this part, or a site-specific modification thereof in accordance with procedure 1 of appendix F of this part; and

(d) The water quality criteria for protection of wildlife in Table 4 of this part, or a site-specific modification thereof in accordance with procedure 1 of appendix F of this part.

§132.4 State adoption and application of methodologies, policies and procedures.

(a) The Great Lakes States and Tribes shall adopt requirements applicable to waters of the Great Lakes System for the purposes of sections 118, 301, 303, and 402 of the Clean Water Act that are consistent with:

(1) The definitions in §132.2;

(2) The Methodologies for Development of Aquatic Life Criteria and Values in appendix A of this part;

(3) The Methodology for Development of Bioaccumulation Factors in appendix B of this part;

(4) The Methodologies for Development of Human Health Criteria and Values in appendix C of this part;

(5) The Methodology for Development of Wildlife Criteria in appendix D of this part;

(6) The Antidegradation Policy in appendix E of this part; and

(7) The Implementation Procedures in appendix F of this part.

(b) Except as provided in paragraphs (g), (h), and (i) of this section, the Great Lakes States and Tribes shall use methodologies consistent with the methodologies designated as Tier I methodologies in appendixes A, C, and D of this part, the methodology in appendix B of this part, and the procedures in appendix F of this part when adopting or revising numeric water quality criteria for the purposes of section 303(c) of the Clean Water Act for the Great Lakes System.

(c) Except as provided in paragraphs (g), (h), and (i) of this section, the

Great Lakes States and Tribes shall use methodologies and procedures consistent with the methodologies designated as Tier I methodologies in appendixes A, C, and D of this part, the Tier II methodologies in appendixes A and C of this part, the methodology in appendix B of this part, and the procedures in appendix F of this part to develop numeric criteria and values when implementing narrative water quality criteria adopted for purposes of section 303(c) of the Clean Water Act.

(d) The water quality criteria and values adopted or developed pursuant to paragraphs (a) through (c) of this section shall apply as follows:

(1) The acute water quality criteria and values for the protection of aquatic life, or site-specific modifications thereof, shall apply to all waters of the Great Lakes System.

(2) The chronic water quality criteria and values for the protection of aquatic life, or site-specific modifications thereof, shall apply to all waters of the Great Lakes System.

(3) The water quality criteria and values for protection of human health, or site-specific modifications thereof, shall apply as follows:

(i) Criteria and values derived as HCV-Drinking and HNV-Drinking shall apply to the Open Waters of the Great Lakes, all connecting channels of the Great Lakes, and all other waters of the Great Lakes System that have been designated as public water supplies by any State or Tribe in accordance with 40 CFR 131.10.

(ii) Criteria and values derived as HCV-Nondrinking and HNV-Nondrinking shall apply to all waters of the Great Lakes System other than those in paragraph (d)(3)(i) of this section.

(4) Criteria for protection of wildlife, or site-specific modifications thereof, shall apply to all waters of the Great Lakes System.

(e) The Great Lakes States and Tribes shall apply implementation procedures consistent with the procedures in appendix F of this part for all applicable purposes under the Clean Water Act, including developing total maximum daily loads for the purposes of section 303(d) and water quality-based effluent limits for the purposes of section 402, in establishing controls on the discharge of any pollutant to the Great Lakes System by any point source with the following exceptions:

(1) The Great Lakes States and Tribes are not required to apply these implementation procedures in establishing controls on the discharge of any pollutant by a wet weather point source. Any adopted implementation procedures shall conform with all applicable Federal, State and Tribal requirements.

(2) The Great Lakes States and Tribes may, but are not required to, apply procedures consistent with procedures 1, 2, 3, 4, 5, 7, 8, and 9 of appendix F of this part in establishing controls on the discharge of any pollutant set forth in Table 5 of this part. Any procedures applied in lieu of these implementation procedures shall conform with all applicable Federal, State, and Tribal requirements.

(f) The Great Lakes States and Tribes shall apply an antidegradation policy consistent with the policy in appendix E for all applicable purposes under the Clean Water Act, including 40 CFR 131.12.

(g) For pollutants listed in Table 5 of this part, the Great Lakes States and Tribes shall:

(1) Apply any methodologies and procedures acceptable under 40 CFR part 131 when developing water quality criteria or implementing narrative criteria; and

(2) Apply the implementation procedures in appendix F of this part or alternative procedures consistent with all applicable Federal, State, and Tribal laws.

(h) For any pollutant other than those in Table 5 of this part for which the State or Tribe demonstrates that a methodology or procedure in this part is not scientifically defensible, the Great Lakes States and Tribes shall:

(1) Apply an alternative methodology or procedure acceptable under 40 CFR part 131 when developing water quality criteria; or

(2) Apply an alternative implementation procedure that is consistent with all applicable Federal, State, and Tribal laws.

(i) Nothing in this part shall prohibit the Great Lakes States and Tribes from adopting numeric water quality

criteria, narrative criteria, or water quality values that are more stringent than criteria or values specified in §132.3 or that would be derived from application of the methodologies set forth in appendixes A, B, C, and D of this part, or to adopt antidegradation standards and implementation procedures more stringent than those set forth in appendixes E and F of this part.

§132.5 Procedures for adoption and EPA review.

(a) Except as provided in paragraph (c) of this section, the Great Lakes States and Tribes shall adopt and submit for EPA review and approval the criteria, methodologies, policies, and procedures developed pursuant to this part no later than September 23, 1996.

(b) The following elements must be included in each submission to EPA for review:

(1) The criteria, methodologies, policies, and procedures developed pursuant to this part;

(2) Certification by the Attorney General or other appropriate legal authority pursuant to 40 CFR 123.62 and 40 CFR 131.6(e) as appropriate;

(3) All other information required for submission of National Pollutant Discharge Elimination System (NPDES) program modifications under 40 CFR 123.62; and

(4) General information which will aid EPA in determining whether the criteria, methodologies, policies and procedures are consistent with the requirements of the Clean Water Act and this part, as well as information on general policies which may affect their application and implementation.

(c) The Regional Administrator may extend the deadline for the submission required in paragraph (a) of this section if the Regional Administrator believes that the submission will be consistent with the requirements of this part and can be reviewed and approved pursuant to this section no later than March 23, 1997.

(d) If a Great Lakes State or Tribe makes no submission pursuant to this part to EPA for review, the requirements of this part shall apply to discharges to waters of the Great Lakes System located within the State or Federal Indian reservation upon EPA's publication of a final rule indicating the effective date of the part 132 requirements in the identified jurisdictions.

(e) If a Great Lakes State or Tribe submits criteria, methodologies, policies, and procedures pursuant to this part to EPA for review that contain substantial modifications of the State or Tribal NPDES program, EPA shall issue public notice and provide a minimum of 30 days for public comment on such modifications. The public notice shall conform with the requirements of 40 CFR 123.62.

(f) After review of State or Tribal submissions under this section, and following the public comment period in subparagraph (e) of this section, if any, EPA shall either:

(1) Publish notice of approval of the submission in the FEDERAL REGISTER within 90 days of such submission; or

(2) Notify the State or Tribe within 90 days of such submission that EPA has determined that all or part of the submission is inconsistent with the requirements of the Clean Water Act or this part and identify any necessary changes to obtain EPA approval. If the State or Tribe fails to adopt such changes within 90 days after the notification, EPA shall publish a notice in the FEDERAL REGISTER identifying the approved and disapproved elements of the submission and a final rule in the FEDERAL REGISTER identifying the provisions of part 132 that shall apply to discharges within the State or Federal Indian reservation.

(g) EPA's approval or disapproval of a State or Tribal submission shall be based on the requirements of this part and of the Clean Water Act. EPA's determination whether the criteria, methodologies, policies, and procedures in a State or Tribal submission are consistent with the requirements of this part will be based on whether:

(1) *For pollutants listed in Tables 1, 2, 3, and 4 of this part.* The Great Lakes State or Tribe has adopted numeric water quality criteria as protective as each of the numeric criteria in Tables 1, 2, 3, and 4 of this part, taking into account any site-specific criteria modifications in accordance with procedure 1 of appendix F of this part;

(2) *For pollutants other than those listed in Tables 1, 2, 3, 4, and 5 of this part.* The Great Lakes State or Tribe demonstrates that either:

(i) It has adopted numeric criteria in its water quality standards that were derived, or are as protective as or more protective than could be derived, using the methodologies in appendixes A, B, C, and D of this part, and the site-specific criteria modification procedures in accordance with procedure 1 of appendix F of this part; or

(ii) It has adopted a procedure by which water quality-based effluent limits and total maximum daily loads are developed using the more protective of:

(A) Numeric criteria adopted by the State into State water quality standards and approved by EPA prior to March 23, 1997; or

(B) Water quality criteria and values derived pursuant to § 132.4(c); and

(3) *For methodologies, policies, and procedures.* The Great Lakes State or Tribe has adopted methodologies, policies, and procedures as protective as the corresponding methodology, policy, or procedure in § 132.4. The Great Lakes State or Tribe may adopt provisions that are more protective than those contained in this part. Adoption of a more protective element in one provision may be used to offset a less protective element in the same provision as long as the adopted provision is as protective as the corresponding provision in this part; adoption of a more protective element in one provision, however, is not justification for adoption of a less protective element in another provision of this part.

(h) A submission by a Great Lakes State or Tribe will need to include any provisions that EPA determines, based on EPA's authorities under the Clean Water Act and the results of consultation under section 7 of the Endangered Species Act, are necessary to ensure that water quality is not likely to jeopardize the continued existence of any endangered or threatened species listed under section 4 of the Endangered Species Act or result in the destruction or adverse modification of such species' critical habitat.

(i) EPA's approval of the elements of a State's or Tribe's submission will constitute approval under section 118 of the Clean Water Act, approval of the submitted water quality standards pursuant to section 303 of the Clean Water Act, and approval of the submitted modifications to the State's or Tribe's NPDES program pursuant to section 402 of the Clean Water Act.

§ 132.6 Application of part 132 requirements in Great Lakes States and Tribes. [Reserved]

TABLES TO PART 132

Table 1.—Acute Water Quality Criteria for Protection of Aquatic Life in Ambient Water

EPA recommends that metals criteria be expressed as dissolved concentrations (see appendix A, I.A.4 for more information regarding metals criteria).

(a)

Chemical	CMC (µg/L)	Conversion factor (CF)
Arsenic (III)	[a,b] 339.8	1.000
Chromium (VI)	[a,b] 16.02	0.982
Cyanide	[c] 22	n/a
Dieldrin	[d] 0.24	n/a
Endrin	[d] 0.086	n/a
Lindane	[d] 0.95	n/a
Mercury (II)	[a,b] 1.694	0.85
Parathion	[d] 0.065	n/a
Selenium	[a,b] 19.34	0.922

[a] $CMC=CMC^{tr}$.
[b] $CMC^{d}=(CMC^{tr})$ CF. The CMC^{d} shall be rounded to two significant digits.
[c] CMC should be considered free cyanide as CN.
[d] $CMC=CMC^{t}$.

Notes:
The term "n/a" means not applicable.
CMC is Criterion Maximum Concentration.
CMC^{tr} is the CMC expressed as total recoverable.
CMC^{d} is the CMC expressed as a dissolved concentration.
CMC^{t} is the CMC expressed as a total concentration.

(b)

Chemical	m_A	b_A	Conversion factor (CF)
Cadmium [a,b]	1.128	−3.6867	0.85
Chromium (III) [a,b]	0.819	+3.7256	0.316
Copper [a,b]	0.9422	−1.700	0.960
Nickel [a,b]	0.846	+2.255	0.998
Pentachlorophenol [c]	1.005	−4.869	n/a
Zinc [a,b]	0.8473	+0.884	0.978

[a] $CMC^{tr}=\exp\{m_A[\ln(\text{hardness})]+b_A\}$.
[b] $CMC^{d}=(CMC^{tr})$ CF. The CMC^{d} shall be rounded to two significant digits.
[c] $CMC^{t}=\exp m_A\{[pH]+b_A\}$. The CMC^{t} shall be rounded to two significant digits.

Notes:
The term "exp" represents the base e exponential function.
The term "n/a" means not applicable.
CMC is Criterion Maximum Concentration.
CMC^{tr} is the CMC expressed as total recoverable.
CMC^{d} is the CMC expressed as a dissolved concentration.
CMC^{t} is the CMC expressed as a total concentration.

Table 2.—Chronic Water Quality Criteria for Protection of Aquatic Life in Ambient Water

EPA recommends that metals criteria be expressed as dissolved concentrations (see appendix A, I.A.4 for more information regarding metals criteria).

(a)

Chemical	CCC (µg/L)	Conversion factor (CF)
Arsenic (III)	[a,b] 147.9	1.000
Chromium (VI)	[a,b] 10.98	0.962
Cyanide	[c] 5.2	n/a
Dieldrin	[d] 0.056	n/a
Endrin	[d] 0.036	n/a
Mercury (II)	[a,b] 0.9081	0.85
Parathion	[d] 0.013	n/a
Selenium	[a,b] 5	0.922

[a] $CCC=CCC^{tr}$.
[b] $CCC^{d}=(CCC^{tr})$ CF. The CCC^{d} shall be rounded to two significant digits.
[c] CCC should be considered free cyanide as CN.
[d] $CCC=CCC^{t}$.

Notes:
The term ''n/a'' means not applicable.
CCC is Criterion Continuous Concentration.
CCC^{tr} is the CCC expressed as total recoverable.
CCC^{d} is the CCC expressed as a dissolved concentration.
CCC^{t} is the CCC expressed as a total concentration.

(b)

Chemical	m_c	b_c	Conversion factor (CF)
Cadmium[a,b]	0.7852	−2.715	0.850
Chromium (III)[a,b]	0.819	+0.6848	0.860
Copper[a,b]	0.8545	−1.702	0.960
Nickel[a,b]	0.846	+0.0584	0.997
Pentachlorophenol[c]	1.005	−5.134	n/a
Zinc[a,b]	0.8473	+0.884	0.986

[a] $CCC^{tr}=\exp\{m_c[\ln(\text{hardness})]+b_c\}$.
[b] $CCC_d=(CCC^{tr})$ (CF). The CCC^{d} shall be rounded to two significant digits.
[c] $CMC^{t}=\exp\{m_A[pH]+b_A\}$. The CMC^{t} shall be rounded to two significant digits.

Notes:
The term ''exp'' represents the base e exponential function.
The term ''n/a'' means not applicable.
CCC is Criterion Continuous Concentration.
CCC^{tr} is the CCC expressed as total recoverable.
CCC^{d} is the CCC expressed as a dissolved concentration.
CCC^{t} is the CCC expressed as a total concentration.

TABLE 3.—WATER QUALITY CRITERIA FOR PROTECTION OF HUMAN HEALTH

Chemical	HNV (µg/L)		HCV (µg/L)	
	Drinking	Nondrinking	Drinking	Nondrinking
Benzene	1.9E1	5.1E2	1.2E1	3.1E2
Chlordane	1.4E–3	1.4E–3	2.5E–4	2.5E–4
Chlorobenzene	4.7E2	3.2E3		
Cyanides	6.0E2	4.8E4		
DDT	2.0E–3	2.0E–3	1.5E–4	1.5E–4
Dieldrin	4.1E–4	4.1E–4	6.5E–6	6.5E–6
2,4-Dimethylphenol	4.5E2	8.7E3		
2,4-Dinitrophenol	5.5E1	2.8E3		
Hexachlorobenzene	4.6E–2	4.6E–2	4.5E–4	4.5E–4
Hexachloroethane	6.0	7.6	5.3	6.7
Lindane	4.7E–1	5.0E–1		
Mercury [1]	1.8E–3	1.8E–3		
Methylene chloride	1.6E3	9.0E4	4.7E1	2.6E3
PCBs (class)			6.7E–6	6.7E–6
2,3,7,8-TCDD	6.7E–8	6.7E–8	8.6E–9	8.6E–9
Toluene	5.6E3	5.1E4		
Toxaphene			6.8E–5	6.8E–5
Trichloroethylene			2.9E1	3.7E2

[1] Includes methylmercury.

[60 FR 15387, Mar. 23, 1995, as amended at 62 FR 11731, Mar. 12, 1997]

TABLE 4.—WATER QUALITY CRITERIA FOR PROTECTION OF WILDLIFE

Chemical	Criteria (µg/L)
DDT and metabolites	1.1E–5
Mercury (including methylmercury)	1.3E–3
PCBs (class)	1.2E–4
2,3,7,8-TCDD	3.1E–9

[60 FR 15387, Mar. 23, 1995, as amended at 62 FR 11731, Mar. 12, 1997]

Table 5.—Pollutants Subject to Federal, State, and Tribal Requirements

Alkalinity
Ammonia
Bacteria
Biochemical oxygen demand (BOD)
Chlorine
Color
Dissolved oxygen
Dissolved solids
pH
Phosphorus
Salinity
Temperature
Total and suspended solids
Turbidity

Table 6.—Pollutants of Initial Focus in the Great Lakes Water Quality Initiative

A. Pollutants that are bioaccumulative chemicals of concern (BCCs):
Chlordane
4,4′-DDD; p,p′-DDD; 4,4′-TDE; p,p′-TDE
4,4′-DDE; p,p′-DDE
4,4′-DDT; p,p′-DDT
Dieldrin
Hexachlorobenzene
Hexachlorobutadiene; hexachloro-1, 3-butadiene
Hexachlorocyclohexanes; BHCs
alpha-Hexachlorocyclohexane; alpha-BHC
beta-Hexachlorocyclohexane; beta-BHC
delta-Hexachlorocyclohexane; delta-BHC
Lindane; gamma-hexachlorocyclohexane; gamma-BHC
Mercury
Mirex
Octachlorostyrene
PCBs; polychlorinated biphenyls
Pentachlorobenzene
Photomirex
2,3,7,8-TCDD; dioxin
1,2,3,4-Tetrachlorobenzene
1,2,4,5-Tetrachlorobenzene Toxaphene
B. Pollutants that are not bioaccumulative chemicals of concern:
Acenaphthene
Acenaphthylene
Acrolein; 2-propenal
Acrylonitrile
Aldrin
Aluminum
Anthracene
Antimony
Arsenic
Asbestos
1,2-Benzanthracene; benz[a]anthracene
Benzene
Benzidine
Benzo[a]pyrene; 3,4-benzopyrene
3,4-Benzofluoranthene; benzo[b]fluoranthene
11,12-Benzofluoranthene; benzo[k]fluoranthene
1,12-Benzoperylene; benzo[ghi]perylene
Beryllium
Bis(2-chloroethoxy) methane
Bis(2-chloroethyl) ether
Bis(2-chloroisopropyl) ether
Bromoform; tribomomethane
4-Bromophenyl phenyl ether
Butyl benzyl phthalate
Cadmium
Carbon tetrachloride; tetrachloromethane
Chlorobenzene
p-Chloro-m-cresol; 4-chloro-3-methylphenol
Chlorodibromomethane
Chlorethane
2-Chloroethyl vinyl ether
Chloroform; trichloromethane
2-Chloronaphthalene
2-Chlorophenol
4-Chlorophenyl phenyl ether
Chlorpyrifos
Chromium
Chrysene
Copper
Cyanide
2,4-D; 2,4-Dichlorophenoxyacetic acid
DEHP; di(2-ethylhexyl) phthalate
Diazinon
1,2:5,6-Dibenzanthracene; dibenz[a,h]anthracene
Dibutyl phthalate; di-n-butyl phthalate
1,2-Dichlorobenzene
1,3-Dichlorobenzene
1,4-Dichlorobenzene
3,3′-Dichlorobenzidine
Dichlorobromomethane; bromodichloromethane
1,1-Dichloroethane
1,2-Dichloroethane
1,1-Dichloroethylene; vinylidene chloride
1,2-trans-Dichloroethylene
2,4-Dichlorophenol
1,2-Dichloropropane
1,3-Dichloropropene; 1,3-dichloropropylene
Diethyl phthalate
2,4-Dimethylphenol; 2,4-xylenol
Dimethyl phthalate
4,6-Dinitro-o-cresol; 2-methyl-4,6-dinitrophenol
2,4-Dinitrophenol
2,4-Dinitrotoluene
2,6-Dinitrotoluene
Dioctyl phthalate; di-n-octyl phthalate
1,2-Diphenylhydrazine
Endosulfan; thiodan
alpha-Endosulfan
beta-Endosulfan
Endosulfan sulfate
Endrin
Endrin aldehyde
Ethylbenzene
Fluoranthene
Fluorene; 9H-fluorene
Fluoride
Guthion
Heptachlor
Heptachlor epoxide
Hexachlorocyclopentadiene
Hexachloroethane
Indeno[1,2,3-cd]pyrene; 2,3-o-phenylene pyrene
Isophorone
Lead
Malathion
Methoxychlor
Methyl bromide; bromomethane
Methyl chloride; chloromethane
Methylene chloride; dichloromethane
Napthalene
Nickel
Nitrobenzene
2-Nitrophenol
4-Nitrophenol
N-Nitrosodimethylamine
N-Nitrosodiphenylamine
N-Nitrosodipropylamine; N-nitrosodi-n-propylamine
Parathion
Pentachlorophenol
Phenanthrene

Phenol
Iron
Pyrene
Selenium
Silver
1,1,2,2-Tetrachloroethane
Tetrachloroethylene
Thallium
Toluene; methylbenzene
1,2,4-Trichlorobenzene
1,1,1-Trichloroethane
1,1,2-Trichloroethane
Trichloroethylene; trichloroethene
2,4,6-Trichlorophenol
Vinyl chloride; chloroethylene; chloroethene
Zinc

APPENDIX A TO PART 132—GREAT LAKES WATER QUALITY INITIATIVE METHODOLOGIES FOR DEVELOPMENTS OF AQUATIC LIFE CRITERIA AND VALUES

METHODOLOGY FOR DERIVING AQUATIC LIFE CRITERIA: TIER I

Great Lakes States and Tribes shall adopt provisions consistent with (as protective as) this appendix.

I. Definitions

A. *Material of Concern*. When defining the material of concern the following should be considered:

1. Each separate chemical that does not ionize substantially in most natural bodies of water should usually be considered a separate material, except possibly for structurally similar organic compounds that only exist in large quantities as commercial mixtures of the various compounds and apparently have similar biological, chemical, physical, and toxicological properties.

2. For chemicals that ionize substantially in most natural bodies of water (e.g., some phenols and organic acids, some salts of phenols and organic acids, and most inorganic salts and coordination complexes of metals and metalloid), all forms that would be in chemical equilibrium should usually be considered one material. Each different oxidation state of a metal and each different non-ionizable covalently bonded organometallic compound should usually be considered a separate material.

3. The definition of the material of concern should include an operational analytical component. Identification of a material simply as ''sodium,'' for example, implies ''total sodium,'' but leaves room for doubt. If ''total'' is meant, it must be explicitly stated. Even ''total'' has different operational definitions, some of which do not necessarily measure ''all that is there'' in all samples. Thus, it is also necessary to reference or describe the analytical method that is intended. The selection of the operational analytical component should take into account the analytical and environmental chemistry of the material and various practical considerations, such as labor and equipment requirements, and whether the method would require measurement in the field or would allow measurement after samples are transported to a laboratory.

a. The primary requirements of the operational analytical component are that it be appropriate for use on samples of receiving water, that it be compatible with the available toxicity and bioaccumulation data without making extrapolations that are too hypothetical, and that it rarely result in underprotection or overprotection of aquatic organisms and their uses. Toxicity is the property of a material, or combination of materials, to adversely affect organisms.

b. Because an ideal analytical measurement will rarely be available, an appropriate compromise measurement will usually have to be used. This compromise measurement must fit with the general approach that if an ambient concentration is lower than the criterion, unacceptable effects will probably not occur, i.e., the compromise measure must not err on the side of underprotection when measurements are made on a surface water. What is an appropriate measurement in one situation might not be appropriate for another. For example, because the chemical and physical properties of an effluent are usually quite different from those of the receiving water, an analytical method that is appropriate for analyzing an effluent might not be appropriate for expressing a criterion, and vice versa. A criterion should be based on an appropriate analytical measurement, but the criterion is not rendered useless if an ideal measurement either is not available or is not feasible.

NOTE: The analytical chemistry of the material might have to be taken into account when defining the material or when judging the acceptability of some toxicity tests, but a criterion must not be based on the sensitivity of an analytical method. When aquatic organisms are more sensitive than routine analytical methods, the proper solution is to develop better analytical methods.

4. It is now the policy of EPA that the use of dissolved metal to set and measure compliance with water quality standards is the recommended approach, because dissolved metal more closely approximates the bioavailable fraction of metal in the water column that does total recoverable metal. One reason is that a primary mechanism for water column toxicity is adsorption at the gill surface which requires metals to be in the dissolved form. Reasons for the consideration of total recoverable metals criteria include risk management considerations not covered by evaluation of water column toxicity. A risk manager may consider sediments and food chain effects and may decide

to take a conservative approach for metals, considering that metals are very persistent chemicals. This approach could include the use of total recoverable metal in water quality standards. A range of different risk management decisions can be justified. EPA recommends that State water quality standards be based on dissolved metal. EPA will also approve a State risk management decision to adopt standards based on total recoverable metal, if those standards are otherwise approvable under this program.

B. *Acute Toxicity*. Concurrent and delayed adverse effect(s) that results from an acute exposure and occurs within any short observation period which begins when the exposure begins, may extend beyond the exposure period, and usually does not constitute a substantial portion of the life span of the organism. (Concurrent toxicity is an adverse effect to an organism that results from, and occurs during, its exposure to one or more test materials.) Exposure constitutes contact with a chemical or physical agent. Acute exposure, however, is exposure of an organism for any short period which usually does not constitute a substantial portion of its life span.

C. *Chronic Toxicity*. Concurrent and delayed adverse effect(s) that occurs only as a result of a chronic exposure. Chronic exposure is exposure of an organism for any long period or for a substantial portion of its life span.

II. Collection of Data

A. Collect all data available on the material concerning toxicity to aquatic animals and plants.

B. All data that are used should be available in typed, dated, and signed hard copy (e.g., publication, manuscript, letter, memorandum, etc.) with enough supporting information to indicate that acceptable test procedures were used and that the results are reliable. In some cases, it might be appropriate to obtain written information from the investigator, if possible. Information that is not available for distribution shall not be used.

C. Questionable data, whether published or unpublished, must not be used. For example, data must be rejected if they are from tests that did not contain a control treatment, tests in which too many organisms in the control treatment died or showed signs of stress or disease, and tests in which distilled or deionized water was used as the dilution water without the addition of appropriate salts.

D. Data on technical grade materials may be used if appropriate, but data on formulated mixtures and emulsifiable concentrates of the material must not be used.

E. For some highly volatile, hydrolyzable, or degradable materials, it might be appropriate to use only results of flow-through tests in which the concentrations of test material in test solutions were measured using acceptable analytical methods. A flow-through test is a test with aquatic organisms in which test solutions flow into constant-volume test chambers either intermittently (e.g., every few minutes) or continuously, with the excess flowing out.

F. Data must be rejected if obtained using:

1. Brine shrimp, because they usually only occur naturally in water with salinity greater than 35 g/kg.

2. Species that do not have reproducing wild populations in North America.

3. Organisms that were previously exposed to substantial concentrations of the test material or other contaminants.

4. Saltwater species except for use in deriving acute-chronic ratios. An ACR is a standard measure of the acute toxicity of a material divided by an appropriate measure of the chronic toxicity of the same material under comparable conditions.

G. Questionable data, data on formulated mixtures and emulsifiable concentrates, and data obtained with species non-resident to North America or previously exposed organisms may be used to provide auxiliary information but must not be used in the derivation of criteria.

III. Required Data

A. Certain data should be available to help ensure that each of the major kinds of possible adverse effects receives adequate consideration. An adverse effect is a change in an organism that is harmful to the organism. Exposure means contact with a chemical or physical agent. Results of acute and chronic toxicity tests with representative species of aquatic animals are necessary so that data available for tested species can be considered a useful indication of the sensitivities of appropriate untested species. Fewer data concerning toxicity to aquatic plants are usually available because procedures for conducting tests with plants and interpreting the results of such tests are not as well developed.

B. To derive a Great Lakes Tier I criterion for aquatic organisms and their uses, the following must be available:

1. Results of acceptable acute (or chronic) tests (see section IV or VI of this appendix) with at least one species of freshwater animal in at least eight different families such that all of the following are included:

a. The family Salmonidae in the class Osteichthyes;

b. One other family (preferably a commercially or recreationally important, warmwater species) in the class Osteichthyes (e.g., bluegill, channel catfish);

c. A third family in the phylum Chordata (e.g., fish, amphibian);

d. A planktonic crustacean (e.g., a cladoceran, copepod);

e. A benthic crustacean (e.g., ostracod, isopod, amphipod, crayfish);

f. An insect (e.g., mayfly, dragonfly, damselfly, stonefly, caddisfly, mosquito, midge);

g. A family in a phylum other than Arthropoda or Chordata (e.g., Rotifera, Annelida, Mollusca);

h. A family in any order of insect or any phylum not already represented.

2. Acute-chronic ratios (see section VI of this appendix) with at least one species of aquatic animal in at least three different families provided that of the three species:

a. At least one is a fish;

b. At least one is an invertebrate; and

c. At least one species is an acutely sensitive freshwater species (the other two may be saltwater species).

3. Results of at least one acceptable test with a freshwater algae or vascular plant is desirable but not required for criterion derivation (see section VIII of this appendix). If plants are among the aquatic organisms most sensitive to the material, results of a test with a plant in another phylum (division) should also be available.

C. If all required data are available, a numerical criterion can usually be derived except in special cases. For example, derivation of a chronic criterion might not be possible if the available ACRs vary by more than a factor of ten with no apparent pattern. Also, if a criterion is to be related to a water quality characteristic (see sections V and VII of this appendix), more data will be required.

D. Confidence in a criterion usually increases as the amount of available pertinent information increases. Thus, additional data are usually desirable.

IV. Final Acute Value

A. Appropriate measures of the acute (short-term) toxicity of the material to a variety of species of aquatic animals are used to calculate the Final Acute Value (FAV). The calculated Final Acute Value is a calculated estimate of the concentration of a test material such that 95 percent of the genera (with which acceptable acute toxicity tests have been conducted on the material) have higher Genus Mean Acute Values (GMAVs). An acute test is a comparative study in which organisms, that are subjected to different treatments, are observed for a short period usually not constituting a substantial portion of their life span. However, in some cases, the Species Mean Acute Value (SMAV) of a commercially or recreationally important species of the Great Lakes System is lower than the calculated FAV, then the SMAV replaces the calculated FAV in order to provide protection for that important species.

B. Acute toxicity tests shall be conducted using acceptable procedures. For good examples of acceptable procedures see American Society for Testing and Materials (ASTM) Standard E 729, Guide for Conducting Acute Toxicity Tests with Fishes, Macroinvertebrates, and Amphibians.

C. Except for results with saltwater annelids and mysids, results of acute tests during which the test organisms were fed should not be used, unless data indicate that the food did not affect the toxicity of the test material. (NOTE: If the minimum acute-chronic ratio data requirements (as described in section III.B.2 of this appendix) are not met with freshwater data alone, saltwater data may be used.)

D. Results of acute tests conducted in unusual dilution water, e.g., dilution water in which total organic carbon or particulate matter exceeded five mg/L, should not be used, unless a relationship is developed between acute toxicity and organic carbon or particulate matter, or unless data show that organic carbon or particulate matter, etc., do not affect toxicity.

E. Acute values must be based upon endpoints which reflect the total severe adverse impact of the test material on the organisms used in the test. Therefore, only the following kinds of data on acute toxicity to aquatic animals shall be used:

1. Tests with daphnids and other cladocerans must be started with organisms less than 24 hours old and tests with midges must be started with second or third instar larvae. It is preferred that the results should be the 48-hour EC50 based on the total percentage of organisms killed and immobilized. If such an EC50 is not available for a test, the 48-hour LC50 should be used in place of the desired 48-hour EC50. An EC50 or LC50 of longer than 48 hours can be used as long as the animals were not fed and the control animals were acceptable at the end of the test. An EC50 is a statistically or graphically estimated concentration that is expected to cause one or more specified effects in 50% of a group of organisms under specified conditions. An LC50 is a statistically or graphically estimated concentration that is expected to be lethal to 50% of a group of organisms under specified conditions.

2. It is preferred that the results of a test with embryos and larvae of barnacles, bivalve molluscs (clams, mussels, oysters and scallops), sea urchins, lobsters, crabs, shrimp and abalones be the 96-hour EC50 based on the percentage of organisms with incompletely developed shells plus the percentage of organisms killed. If such an EC50 is not available from a test, of the values that are available from the test, the lowest of the following should be used in place of the desired 96-hour EC50: 48- to 96-hour EC50s based on percentage of organisms with incompletely developed shells plus percentage of organisms killed, 48- to 96-hour EC50s based upon percentage of organisms with incompletely

developed shells, and 48-hour to 96-hour LC50s. (NOTE: If the minimum acute-chronic ratio data requirements (as described in section III.B.2 of this appendix) are not met with freshwater data alone, saltwater data may be used.)

3. It is preferred that the result of tests with all other aquatic animal species and older life stages of barnacles, bivalve molluscs (clams, mussels, oysters and scallops), sea urchins, lobsters, crabs, shrimp and abalones be the 96-hour EC50 based on percentage of organisms exhibiting loss of equilibrium plus percentage of organisms immobilized plus percentage of organisms killed. If such an EC50 is not available from a test, of the values that are available from a test the lower of the following should be used in place of the desired 96-hour EC50: the 96-hour EC50 based on percentage of organisms exhibiting loss of equilibrium plus percentage of organisms immobilized and the 96-hour LC50.

4. Tests whose results take into account the number of young produced, such as most tests with protozoans, are not considered acute tests, even if the duration was 96 hours or less.

5. If the tests were conducted properly, acute values reported as ''greater than'' values and those which are above the solubility of the test material should be used, because rejection of such acute values would bias the Final Acute Value by eliminating acute values for resistant species.

F. If the acute toxicity of the material to aquatic animals has been shown to be related to a water quality characteristic such as hardness or particulate matter for freshwater animals, refer to section V of this appendix.

G. The agreement of the data within and between species must be considered. Acute values that appear to be questionable in comparison with other acute and chronic data for the same species and for other species in the same genus must not be used. For example, if the acute values available for a species or genus differ by more than a factor of 10, rejection of some or all of the values would be appropriate, absent countervailing circumstances.

H. If the available data indicate that one or more life stages are at least a factor of two more resistant than one or more other life stages of the same species, the data for the more resistant life stages must not be used in the calculation of the SMAV because a species cannot be considered protected from acute toxicity if all of the life stages are not protected.

I. For each species for which at least one acute value is available, the SMAV shall be calculated as the geometric mean of the results of all acceptable flow-through acute toxicity tests in which the concentrations of test material were measured with the most sensitive tested life stage of the species. For a species for which no such result is available, the SMAV shall be calculated as the geometric mean of all acceptable acute toxicity tests with the most sensitive tested life stage, i.e., results of flow-through tests in which the concentrations were not measured and results of static and renewal tests based on initial concentrations (nominal concentrations are acceptable for most test materials if measured concentrations are not available) of test material. A renewal test is a test with aquatic organisms in which either the test solution in a test chamber is removed and replaced at least once during the test or the test organisms are transferred into a new test solution of the same composition at least once during the test. A static test is a test with aquatic organisms in which the solution and organisms that are in a test chamber at the beginning of the test remain in the chamber until the end of the test, except for removal of dead test organisms.

NOTE 1: Data reported by original investigators must not be rounded off. Results of all intermediate calculations must not be rounded off to fewer than four significant digits.

NOTE 2: The geometric mean of N numbers is the Nth root of the product of the N numbers. Alternatively, the geometric mean can be calculated by adding the logarithms of the N numbers, dividing the sum by N, and taking the antilog of the quotient. The geometric mean of two numbers is the square root of the product of the two numbers, and the geometric mean of one number is that number. Either natural (base e) or common (base 10) logarithms can be used to calculate geometric means as long as they are used consistently within each set of data, i.e., the antilog used must match the logarithms used.

NOTE 3: Geometric means, rather than arithmetic means, are used here because the distributions of sensitivities of individual organisms in toxicity tests on most materials and the distributions of sensitivities of species within a genus are more likely to be lognormal than normal. Similarly, geometric means are used for ACRs because quotients are likely to be closer to lognormal than normal distributions. In addition, division of the geometric mean of a set of numerators by the geometric mean of the set of denominators will result in the geometric mean of the set of corresponding quotients.

J. For each genus for which one or more SMAVs are available, the GMAV shall be calculated as the geometric mean of the SMAVs available for the genus.

K. Order the GMAVs from high to low.

L. Assign ranks, R, to the GMAVs from ''1'' for the lowest to ''N'' for the highest. If two

or more GMAVs are identical, assign them successive ranks.

M. Calculate the cumulative probability, P, for each GMAV as R/(N+1).

N. Select the four GMAVs which have cumulative probabilities closest to 0.05 (if there are fewer than 59 GMAVs, these will always be the four lowest GMAVs).

O. Using the four selected GMAVs, and Ps, calculate

$$S^2 = \frac{\sum\left((\ln \mathrm{GMAV})^2\right) - \frac{\left(\sum(\ln \mathrm{GMAV})\right)^2}{4}}{\sum(\mathrm{P}) - \frac{\left(\sum\left(\sqrt{\mathrm{P}}\right)\right)^2}{4}}$$

$$L = \frac{\sum(\ln \mathrm{GMAV}) - S\left(\sum\left(\sqrt{\mathrm{P}}\right)\right)}{4}$$

$$A = S\left(\sqrt{0.05}\right) + L$$

$$\mathrm{FAV} = e^{A}$$

NOTE: Natural logarithms (logarithms to base e, denoted as ln) are used herein merely because they are easier to use on some hand calculators and computers than common (base 10) logarithms. Consistent use of either will produce the same result.

P. If for a commercially or recreationally important species of the Great Lakes System the geometric mean of the acute values from flow-through tests in which the concentrations of test material were measured is lower than the calculated Final Acute Value (FAV), then that geometric mean must be used as the FAV instead of the calculated FAV.

Q. See section VI of this appendix.

V. Final Acute Equation

A. When enough data are available to show that acute toxicity to two or more species is similarly related to a water quality characteristic, the relationship shall be taken into account as described in sections V.B through V.G of this appendix or using analysis of covariance. The two methods are equivalent and produce identical results. The manual method described below provides an understanding of this application of covariance analysis, but computerized versions of covariance analysis are much more convenient for analyzing large data sets. If two or more factors affect toxicity, multiple regression analysis shall be used.

B. For each species for which comparable acute toxicity values are available at two or more different values of the water quality characteristic, perform a least squares regression of the acute toxicity values on the corresponding values of the water quality characteristic to obtain the slope and its 95 percent confidence limits for each species.

NOTE: Because the best documented relationship is that between hardness and acute toxicity of metals in fresh water and a log-log relationship fits these data, geometric means and natural logarithms of both toxicity and water quality are used in the rest of this section. For relationships based on other water quality characteristics, such as Ph, temperature, no transformation or a different transformation might fit the data better, and appropriate changes will be necessary throughout this section.

C. Decide whether the data for each species are relevant, taking into account the range and number of the tested values of the water quality characteristic and the degree of agreement within and between species. For example, a slope based on six data points might be of limited value if it is based only on data for a very narrow range of values of the water quality characteristic. A slope based on only two data points, however, might be useful if it is consistent with other information and if the two points cover a broad enough range of the water quality

characteristic. In addition, acute values that appear to be questionable in comparison with other acute and chronic data available for the same species and for other species in the same genus should not be used. For example, if after adjustment for the water quality characteristic, the acute values available for a species or genus differ by more than a factor of 10, rejection of some or all of the values would be appropriate, absent countervailing justification. If useful slopes are not available for at least one fish and one invertebrate or if the available slopes are too dissimilar or if too few data are available to adequately define the relationship between acute toxicity and the water quality characteristic, return to section IV.G of this appendix, using the results of tests conducted under conditions and in waters similar to those commonly used for toxicity tests with the species.

D. For each species, calculate the geometric mean of the available acute values and then divide each of the acute values for the species by the geometric mean for the species. This normalizes the acute values so that the geometric mean of the normalized values for each species individually and for any combination of species is 1.0.

E. Similarly normalize the values of the water quality characteristic for each species individually using the same procedure as above.

F. Individually for each species perform a least squares regression of the normalized acute values of the water quality characteristic. The resulting slopes and 95 percent confidence limits will be identical to those obtained in section V.B. of this appendix. If, however, the data are actually plotted, the line of best fit for each individual species will go through the point 1,1 in the center of the graph.

G. Treat all of the normalized data as if they were all for the same species and perform a least squares regression of all of the normalized acute values on the corresponding normalized values of the water quality characteristic to obtain the pooled acute slope, V, and its 95 percent confidence limits. If all of the normalized data are actually plotted, the line of best fit will go through the point 1,1 in the center of the graph.

H. For each species calculate the geometric mean, W, of the acute toxicity values and the geometric mean, X, of the values of the water quality characteristic. (These were calculated in sections V.D and V.E of this appendix).

I. For each species, calculate the logarithm, Y, of the SMAV at a selected value, Z, of the water quality characteristic using the equation:

$$Y=\ln W-V(\ln X-\ln Z)$$

J. For each species calculate the SMAV at X using the equation:

$$SMAV=e^{Y}$$

NOTE: Alternatively, the SMAVs at Z can be obtained by skipping step H above, using the equations in steps I and J to adjust each acute value individually to Z, and then calculating the geometric mean of the adjusted values for each species individually. This alternative procedure allows an examination of the range of the adjusted acute values for each species.

K. Obtain the FAV at Z by using the procedure described in sections IV.J through IV.O of this appendix.

L. If, for a commercially or recreationally important species of the Great Lakes System the geometric mean of the acute values at Z from flow-through tests in which the concentrations of the test material were measured is lower than the FAV at Z, then the geometric mean must be used as the FAV instead of the FAV.

M. The Final Acute Equation is written as:

$$FAV=e^{(V[\ln(\text{water quality characteristic})]+A-V[\ln Z])},$$

where:

V=pooled acute slope, and A=ln(FAV at Z).

Because V, A, and Z are known, the FAV can be calculated for any selected value of the water quality characteristic.

VI. Final Chronic Value

A. Depending on the data that are available concerning chronic toxicity to aquatic animals, the Final Chronic Value (FCV) can be calculated in the same manner as the FAV or by dividing the FAV by the Final Acute-Chronic Ratio (FACR). In some cases, it might not be possible to calculate a FCV. The FCV is (a) a calculated estimate of the concentration of a test material such that 95 percent of the genera (with which acceptable chronic toxicity tests have been conducted on the material) have higher GMCVs, or (b) the quotient of an FAV divided by an appropriate ACR, or (c) the SMCV of an important and/or critical species, if the SMCV is lower than the calculated estimate or the quotient, whichever is applicable.

NOTE: As the name implies, the ACR is a way of relating acute and chronic toxicities.

B. Chronic values shall be based on results of flow-through (except renewal is acceptable for daphnids) chronic tests in which the concentrations of test material in the test solutions were properly measured at appropriate times during the test. A chronic test is a comparative study in which organisms, that are subjected to different treatments, are observed for a long period or a substantial portion of their life span.

C. Results of chronic tests in which survival, growth, or reproduction in the control treatment was unacceptably low shall not be

used. The limits of acceptability will depend on the species.

D. Results of chronic tests conducted in unusual dilution water, e.g., dilution water in which total organic carbon or particulate matter exceeded five mg/L, should not be used, unless a relationship is developed between chronic toxicity and organic carbon or particulate matter, or unless data show that organic carbon, particulate matter, etc., do not affect toxicity.

E. Chronic values must be based on endpoints and lengths of exposure appropriate to the species. Therefore, only results of the following kinds of chronic toxicity tests shall be used:

1. Life-cycle toxicity tests consisting of exposures of each of two or more groups of individuals of a species to a different concentration of the test material throughout a life cycle. To ensure that all life stages and life processes are exposed, tests with fish should begin with embryos or newly hatched young less than 48 hours old, continue through maturation and reproduction, and should end not less than 24 days (90 days for salmonids) after the hatching of the next generation. Tests with daphnids should begin with young less than 24 hours old and last for not less than 21 days, and for ceriodaphnids not less than seven days. For good examples of acceptable procedures see American Society for Testing and Materials (ASTM) Standard E 1193 Guide for conducting renewal life-cycle toxicity tests with *Daphnia magna* and ASTM Standard E 1295 Guide for conducting three-brood, renewal toxicity tests with *Ceriodaphnia dubia*. Tests with mysids should begin with young less than 24 hours old and continue until seven days past the median time of first brood release in the controls. For fish, data should be obtained and analyzed on survival and growth of adults and young, maturation of males and females, eggs spawned per female, embryo viability (salmonids only), and hatchability. For daphnids, data should be obtained and analyzed on survival and young per female. For mysids, data should be obtained and analyzed on survival, growth, and young per female.

2. Partial life-cycle toxicity tests consist of exposures of each of two more groups of individuals of a species of fish to a different concentration of the test material through most portions of a life cycle. Partial life-cycle tests are allowed with fish species that require more than a year to reach sexual maturity, so that all major life stages can be exposed to the test material in less than 15 months. A life-cycle test is a comparative study in which organisms, that are subjected to different treatments, are observed at least from a life stage in one generation to the same life-stage in the next generation. Exposure to the test material should begin with immature juveniles at least two months prior to active gonad development, continue through maturation and reproduction, and end not less than 24 days (90 days for salmonids) after the hatching of the next generation. Data should be obtained and analyzed on survival and growth of adults and young, maturation of males and females, eggs spawned per female, embryo viability (salmonids only), and hatchability.

3. Early life-stage toxicity tests consisting of 28- to 32-day (60 days post hatch for salmonids) exposures of the early life stages of a species of fish from shortly after fertilization through embryonic, larval, and early juvenile development. Data should be obtained and analyzed on survival and growth.

NOTE: Results of an early life-stage test are used as predictions of results of life-cycle and partial life-cycle tests with the same species. Therefore, when results of a life-cycle or partial life-cycle test are available, results of an early life-stage test with the same species should not be used. Also, results of early life-stage tests in which the incidence of mortalities or abnormalities increased substantially near the end of the test shall not be used because the results of such tests are possibly not good predictions of comparable life-cycle or partial life-cycle tests.

F. A chronic value may be obtained by calculating the geometric mean of the lower and upper chronic limits from a chronic test or by analyzing chronic data using regression analysis.

1. A lower chronic limit is the highest tested concentration:

a. In an acceptable chronic test;

b. Which did not cause an unacceptable amount of adverse effect on any of the specified biological measurements; and

c. Below which no tested concentration caused an unacceptable effect.

2. An upper chronic limit is the lowest tested concentration:

a. In an acceptable chronic test;

b. Which did cause an unacceptable amount of adverse effect on one or more of the specified biological measurements; and,

c. Above which all tested concentrations also caused such an effect.

NOTE: Because various authors have used a variety of terms and definitions to interpret and report results of chronic tests, reported results should be reviewed carefully. The amount of effect that is considered unacceptable is often based on a statistical hypothesis test, but might also be defined in terms of a specified percent reduction from the controls. A small percent reduction (e.g., three percent) might be considered acceptable even if it is statistically significantly different from the control, whereas a large percent reduction (e.g., 30 percent) might be considered unacceptable even if it is not statistically significant.

G. If the chronic toxicity of the material to aquatic animals has been shown to be related to a water quality characteristic such as hardness or particulate matter for freshwater animals, refer to section VII of this appendix.

H. If chronic values are available for species in eight families as described in section III.B.1 of this appendix, a SMCV shall be calculated for each species for which at least one chronic value is available by calculating the geometric mean of the results of all acceptable life-cycle and partial life-cycle toxicity tests with the species; for a species of fish for which no such result is available, the SMCV is the geometric mean of all acceptable early life-stage tests. Appropriate GMCVs shall also be calculated. A GMCV is the geometric mean of the SMCVs for the genus. The FCV shall be obtained using the procedure described in sections IV.J through IV.O of this appendix, substituting SMCV and GMCV for SMAV and GMAV respectively. See section VI.M of this appendix.

NOTE: Section VI.I through VI.L are for use when chronic values are not available for species in eight taxonomic families as described in section III.B.1 of this appendix.

I. For each chronic value for which at least one corresponding appropriate acute value is available, calculate an ACR, using for the numerator the geometric mean of the results of all acceptable flow-through (except static is acceptable for daphnids and midges) acute tests in the same dilution water in which the concentrations are measured. For fish, the acute test(s) should be conducted with juveniles. The acute test(s) should be part of the same study as the chronic test. If acute tests were not conducted as part of the same study, but were conducted as part of a different study in the same laboratory and dilution water, then they may be used. If no such acute tests are available, results of acute tests conducted in the same dilution water in a different laboratory may be used. If no such acute tests are available, an ACR shall not be calculated.

J. For each species, calculate the SMACR as the geometric mean of all ACRs available for that species. If the minimum ACR data requirements (as described in section III.B.2 of this appendix) are not met with freshwater data alone, saltwater data may be used along with the freshwater data.

K. For some materials, the ACR seems to be the same for all species, but for other materials the ratio seems to increase or decrease as the SMAV increases. Thus the FACR can be obtained in three ways, depending on the data available:

1. If the species mean ACR seems to increase or decrease as the SMAVs increase, the FACR shall be calculated as the geometric mean of the ACRs for species whose SMAVs are close to the FAV.

2. If no major trend is apparent and the ACRs for all species are within a factor of ten, the FACR shall be calculated as the geometric mean of all of the SMACRs.

3. If the most appropriate SMACRs are less than 2.0, and especially if they are less than 1.0, acclimation has probably occurred during the chronic test. In this situation, because continuous exposure and acclimation cannot be assured to provide adequate protection in field situations, the FACR should be assumed to be two, so that the FCV is equal to the Criterion Maximum Concentration (CMC). (See section X.B of this appendix.)

If the available SMACRs do not fit one of these cases, a FACR may not be obtained and a Tier I FCV probably cannot be calculated.

L. Calculate the FCV by dividing the FAV by the FACR.

FCV=FAV÷FACR

If there is a Final Acute Equation rather than a FAV, see also section V of this appendix.

M. If the SMCV of a commercially or recreationally important species of the Great Lakes System is lower than the calculated FCV, then that SMCV must be used as the FCV instead of the calculated FCV.

N. See section VIII of this appendix.

VII. Final Chronic Equation

A. A Final Chronic Equation can be derived in two ways. The procedure described in section VII.A of this appendix will result in the chronic slope being the same as the acute slope. The procedure described in sections VII.B through N of this appendix will usually result in the chronic slope being different from the acute slope.

1. If ACRs are available for enough species at enough values of the water quality characteristic to indicate that the ACR appears to be the same for all species and appears to be independent of the water quality characteristic, calculate the FACR as the geometric mean of the available SMACRs.

2. Calculate the FCV at the selected value Z of the water quality characteristic by dividing the FAV at Z (see section V.M of this appendix) by the FACR.

3. Use V=pooled acute slope (see section V.M of this appendix), and

L=pooled chronic slope.

4. See section VII.M of this appendix.

B. When enough data are available to show that chronic toxicity to at least one species is related to a water quality characteristic, the relationship should be taken into account as described in sections C through G below or using analysis of covariance. The two methods are equivalent and produce identical results. The manual method described below provides an understanding of this application of covariance analysis, but computerized versions of covariance analysis

are much more convenient for analyzing large data sets. If two or more factors affect toxicity, multiple regression analysis shall be used.

C. For each species for which comparable chronic toxicity values are available at two or more different values of the water quality characteristic, perform a least squares regression of the chronic toxicity values on the corresponding values of the water quality characteristic to obtain the slope and its 95 percent confidence limits for each species.

NOTE: Because the best documented relationship is that between hardness and acute toxicity of metals in fresh water and a log-log relationship fits these data, geometric means and natural logarithms of both toxicity and water quality are used in the rest of this section. For relationships based on other water quality characteristics, such as Ph, temperature, no transformation or a different transformation might fit the data better, and appropriate changes will be necessary throughout this section. It is probably preferable, but not necessary, to use the same transformation that was used with the acute values in section V of this appendix.

D. Decide whether the data for each species are relevant, taking into account the range and number of the tested values of the water quality characteristic and the degree of agreement within and between species. For example, a slope based on six data points might be of limited value if it is based only on data for a very narrow range of values of the water quality characteristic. A slope based on only two data points, however, might be more useful if it is consistent with other information and if the two points cover a broad range of the water quality characteristic. In addition, chronic values that appear to be questionable in comparison with other acute and chronic data available for the same species and for other species in the same genus in most cases should not be used. For example, if after adjustment for the water quality characteristic, the chronic values available for a species or genus differ by more than a factor of 10, rejection of some or all of the values is, in most cases, absent countervailing circumstances, appropriate. If a useful chronic slope is not available for at least one species or if the available slopes are too dissimilar or if too few data are available to adequately define the relationship between chronic toxicity and the water quality characteristic, it might be appropriate to assume that the chronic slope is the same as the acute slope, which is equivalent to assuming that the ACR is independent of the water quality characteristic. Alternatively, return to section VI.H of this appendix, using the results of tests conducted under conditions and in waters similar to those commonly used for toxicity tests with the species.

E. Individually for each species, calculate the geometric mean of the available chronic values and then divide each chronic value for a species by the mean for the species. This normalizes the chronic values so that the geometric mean of the normalized values for each species individually, and for any combination of species, is 1.0.

F. Similarly, normalize the values of the water quality characteristic for each species individually.

G. Individually for each species, perform a least squares regression of the normalized chronic toxicity values on the corresponding normalized values of the water quality characteristic. The resulting slopes and the 95 percent confidence limits will be identical to those obtained in section VII.B of this appendix. Now, however, if the data are actually plotted, the line of best fit for each individual species will go through the point 1,1 in the center of the graph.

H. Treat all of the normalized data as if they were all the same species and perform a least squares regression of all of the normalized chronic values on the corresponding normalized values of the water quality characteristic to obtain the pooled chronic slope, L, and its 95 percent confidence limits.

If all normalized data are actually plotted, the line of best fit will go through the point 1,1 in the center of the graph.

I. For each species, calculate the geometric mean, M, of the toxicity values and the geometric mean, P, of the values of the water quality characteristic. (These are calculated in sections VII.E and F of this appendix.)

J. For each species, calculate the logarithm, Q, of the SMCV at a selected value, Z, of the water quality characteristic using the equation:

$$Q=\ln M—L(\ln P-\ln Z)$$

NOTE: Although it is not necessary, it is recommended that the same value of the water quality characteristic be used here as was used in section V of this appendix.

K. For each species, calculate a SMCV at Z using the equation:

$$SMCV=e^{Q}$$

NOTE: Alternatively, the SMCV at Z can be obtained by skipping section VII.J of this appendix, using the equations in sections VII.J and K of this appendix to adjust each chronic value individually to Z, and then calculating the geometric means of the adjusted values for each species individually. This alternative procedure allows an examination of the range of the adjusted chronic values for each species.

L. Obtain the FCV at Z by using the procedure described in sections IV.J through O of this appendix.

M. If the SMCV at Z of a commercially or recreationally important species of the

Great Lakes System is lower than the calculated FCV at Z, then that SMCV shall be used as the FCV at Z instead of the calculated FCV.

N. The Final Chronic Equation is written as:

$$FCV = e^{(L[\ln(\text{water quality characteristic})] + \ln S - L[\ln Z])}$$

Where:

L=pooled chronic slope and S = FCV at Z.

Because L, S, and Z are known, the FCV can be calculated for any selected value of the water quality characteristic.

VIII. Final Plant Value

A. A Final Plant Value (FPV) is the lowest plant value that was obtained with an important aquatic plant species in an acceptable toxicity test for which the concentrations of the test material were measured and the adverse effect was biologically important. Appropriate measures of the toxicity of the material to aquatic plants are used to compare the relative sensitivities of aquatic plants and animals. Although procedures for conducting and interpreting the results of toxicity tests with plants are not well-developed, results of tests with plants usually indicate that criteria which adequately protect aquatic animals and their uses will, in most cases, also protect aquatic plants and their uses.

B. A plant value is the result of a 96-hour test conducted with an alga or a chronic test conducted with an aquatic vascular plant.

NOTE: A test of the toxicity of a metal to a plant shall not be used if the medium contained an excessive amount of a complexing agent, such as EDTA, that might affect the toxicity of the metal. Concentrations of EDTA above 200 µg/L should be considered excessive.

C. The FPV shall be obtained by selecting the lowest result from a test with an important aquatic plant species in which the concentrations of test material are measured and the endpoint is biologically important.

IX. Other Data

Pertinent information that could not be used in earlier sections might be available concerning adverse effects on aquatic organisms. The most important of these are data on cumulative and delayed toxicity, reduction in survival, growth, or reproduction, or any other adverse effect that has been shown to be biologically important. Delayed toxicity is an adverse effect to an organism that results from, and occurs after the end of, its exposure to one or more test materials. Especially important are data for species for which no other data are available. Data from behavioral, biochemical, physiological, microcosm, and field studies might also be available. Data might be available from tests conducted in unusual dilution water (see sections IV.D and VI.D of this appendix), from chronic tests in which the concentrations were not measured (see section VI.B of this appendix), from tests with previously exposed organisms (see section II.F.3 of this appendix), and from tests on formulated mixtures or emulsifiable concentrates (see section II.D of this appendix). Such data might affect a criterion if the data were obtained with an important species, the test concentrations were measured, and the endpoint was biologically important.

X. Criterion

A. A criterion consists of two concentrations: the CMC and the Criterion Continuous Concentration (CCC).

B. The CMC is equal to one-half the FAV. The CMC is an estimate of the highest concentration of a material in the water column to which an aquatic community can be exposed briefly without resulting in an unacceptable effect.

C. The CCC is equal to the lowest of the FCV or the FPV (if available) unless other data (see section IX of this appendix) show that a lower value should be used. The CCC is an estimate of the highest concentration of a material in the water column to which an aquatic community can be exposed indefinitely without resulting in an unacceptable effect. If toxicity is related to a water quality characteristic, the CCC is obtained from the Final Chronic Equation or FPV (if available) that results in the lowest concentrations in the usual range of the water quality characteristic, unless other data (see section IX) show that a lower value should be used.

D. Round both the CMC and the CCC to two significant digits.

E. The criterion is stated as:

The procedures described in the Tier I methodology indicate that, except possibly where a commercially or recreationally important species is very sensitive, aquatic organisms should not be affected unacceptably if the four-day average concentration of (1) does not exceed (2) µg/L more than once every three years on the average and if the one-hour average concentration does not exceed (3) µg/L more than once every three years on the average.

Where:

(1) = insert name of material
(2) = insert the CCC
(3) = insert the CMC

If the CMC averaging period of one hour or the CCC averaging period of four days is inappropriate for the pollutant, or if the once-in-three-year allowable excursion frequency is inappropriate for the pollutant or for the sites to which a criterion is applied, then the State may specify alternative averaging periods or frequencies. The choice of an alternative averaging period or frequency shall be

justified by a scientifically defensible analysis demonstrating that the alternative values will protect the aquatic life uses of the water. Appropriate laboratory data and/or well-designed field biological surveys shall be submitted to EPA as justification for differing averaging periods and/or frequencies of exceedance.

XI. Final Review

A. The derivation of the criterion should be carefully reviewed by rechecking each step of the Guidance in this part. Items that should be especially checked are:

1. If unpublished data are used, are they well documented?
2. Are all required data available?
3. Is the range of acute values for any species greater than a factor of 10?
4. Is the range of SMAVs for any genus greater than a factor of 10?
5. Is there more than a factor of 10 difference between the four lowest GMAVs?
6. Are any of the lowest GMAVs questionable?
7. Is the FAV reasonable in comparison with the SMAVs and GMAVs?
8. For any commercially or recreationally important species of the Great Lakes System, is the geometric mean of the acute values from flow-through tests in which the concentrations of test material were measured lower than the FAV?
9. Are any of the chronic values used questionable?
10. Are any chronic values available for acutely sensitive species?
11. Is the range of acute-chronic ratios greater than a factor of 10?
12. Is the FCV reasonable in comparison with the available acute and chronic data?
13. Is the measured or predicted chronic value for any commercially or recreationally important species of the Great Lakes System below the FCV?
14. Are any of the other data important?
15. Do any data look like they might be outliers?
16. Are there any deviations from the Guidance in this part? Are they acceptable?

B. On the basis of all available pertinent laboratory and field information, determine if the criterion is consistent with sound scientific evidence. If it is not, another criterion, either higher or lower, shall be derived consistent with the Guidance in this part.

METHODOLOGY FOR DERIVING AQUATIC LIFE VALUES: TIER II

XII. Secondary Acute Value

If all eight minimum data requirements for calculating an FAV using Tier I are not met, a Secondary Acute Value (SAV) for the waters of the Great Lakes System shall be calculated for a chemical as follows:

To calculate a SAV, the lowest GMAV in the database is divided by the Secondary Acute Factor (SAF) (Table A–1 of this appendix) corresponding to the number of satisfied minimum data requirements listed in the Tier I methodology (section III.B.1 of this appendix). (Requirements for definitions, data collection and data review, contained in sections I, II, and IV shall be applied to calculation of a SAV.) If all eight minimum data requirements are satisfied, a Tier I criterion calculation may be possible. In order to calculate a SAV, the database must contain, at a minimum, a genus mean acute value (GMAV) for one of the following three genera in the family Daphnidae—*Ceriodaphnia sp.*, *Daphnia sp.*, or *Simocephalus sp.*

If appropriate, the SAV shall be made a function of a water quality characteristic in a manner similar to that described in Tier I.

XIII. Secondary Acute-Chronic Ratio

If three or more experimentally determined ACRs, meeting the data collection and review requirements of Section VI of this appendix, are available for the chemical, determine the FACR using the procedure described in Section VI. If fewer than three acceptable experimentally determined ACRs are available, use enough assumed ACRs of 18 so that the total number of ACRs equals three. Calculate the Secondary Acute-Chronic Ratio (SACR) as the geometric mean of the three ACRs. Thus, if no experimentally determined ACRs are available, the SACR is 18.

XIV. Secondary Chronic Value

Calculate the Secondary Chronic Value (SCV) using one of the following:

$$\text{A.}\quad SCV = \frac{FAV}{SACR}\ (\text{use FAV from Tier I})$$

$$\text{B.}\quad SCV = \frac{SAV}{FACR}$$

$$\text{C.}\quad SCV = \frac{SAV}{SACR}$$

If appropriate, the SCV will be made a function of a water quality characteristic in a manner similar to that described in Tier I.

XV. Commercially or Recreationally Important Species

If for a commercially or recreationally important species of the Great Lakes System the geometric mean of the acute values or

chronic values from flow-through tests in which the concentrations of the test materials were measured is lower than the calculated SAV or SCV, then that geometric mean must be used as the SAV or SCV instead of the calculated SAV or SCV.

XVI. Tier II Value

A. A Tier II value shall consist of two concentrations: the Secondary Maximum Concentration (SMC) and the Secondary Continuous Concentration (SCC).

B. The SMC is equal to one-half of the SAV.

C. The SCC is equal to the lowest of the SCV or the Final Plant Value, if available, unless other data (see section IX of this appendix) show that a lower value should be used.

If toxicity is related to a water quality characteristic, the SCC is obtained from the Secondary Chronic Equation or FPV, if available, that results in the lowest concentrations in the usual range of the water quality characteristic, unless other data (See section IX of this appendix) show that a lower value should be used.

D. Round both the SMC and the SCC to two significant digits.

E. The Tier II value is stated as:

The procedures described in the Tier II methodology indicate that, except possibly where a locally important species is very sensitive, aquatic organisms should not be affected unacceptably if the four-day average concentration of (1) does not exceed (2) µg/L more than once every three years on the average and if the one-hour average concentration does not exceed (3) µg/L more than once every three years on the average.

Where:

(1) = insert name of material
(2) = insert the SCC
(3) = insert the SMC

As discussed above, States and Tribes have the discretion to specify alternative averaging periods or frequencies (see section X.E. of this appendix).

XVII. Appropriate Modifications

On the basis of all available pertinent laboratory and field information, determine if the Tier II value is consistent with sound scientific evidence. If it is not, another value, either higher or lower, shall be derived consistent with the Guidance in this part.

TABLE A–1.— SECONDARY ACUTE FACTORS

Number of minimum data requirements satisfied	Adjustment factor
1	21.9
2	13.0
3	8.0
4	7.0

TABLE A–1.— SECONDARY ACUTE FACTORS

Number of minimum data requirements satisfied	Adjustment factor
5	6.1
6	5.2
7	4.3

APPENDIX B TO PART 132—GREAT LAKES WATER QUALITY INITIATIVE

METHODOLOGY FOR DERIVING BIOACCUMULATION FACTORS

Great Lakes States and Tribes shall adopt provisions consistent with (as protective as) this appendix.

I. Introduction

A. The purpose of this methodology is to describe procedures for deriving bioaccumulation factors (BAFs) to be used in the calculation of Great Lakes Water Quality Guidance (Guidance) human health Tier I criteria and Tier II values and wildlife Tier I criteria. A subset of the human health BAFs are also used to identify the chemicals that are considered bioaccumulative chemicals of concern (BCCs).

B. Bioaccumulation reflects uptake of a substance by aquatic organisms exposed to the substance through all routes (i.e., ambient water and food), as would occur in nature. Bioconcentration reflects uptake of a substance by aquatic organisms exposed to the substance only through the ambient water. Both BAFs and bioconcentration factors (BCFs) are proportionality constants that describe the relationship between the concentration of a substance in aquatic organisms and its concentration in the ambient water. For the Guidance in this part, BAFs, rather than BCFs, are used to calculate Tier I criteria for human health and wildlife and Tier II values for human health because they better account for the total exposure of aquatic organisms to chemicals.

C. For organic chemicals, baseline BAFs can be derived using four methods. Measured baseline BAFs are derived from field-measured BAFs; predicted baseline BAFs are derived using biota-sediment accumulation factors (BSAFs) or are derived by multiplying a laboratory-measured or predicted BCF by a food-chain multiplier (FCM). The lipid content of the aquatic organisms is used to account for partitioning of organic chemicals within organisms so that data from different tissues and species can be integrated. In addition, the baseline BAF is based on the concentration of freely dissolved organic chemicals in the ambient water to facilitate extrapolation from one water to another.

D. For inorganic chemicals, baseline BAFs can be derived using two of the four methods. Baseline BAFs are derived using either

field-measured BAFs or by multiplying laboratory-measured BCFs by a FCM. For inorganic chemicals, BAFs are assumed to equal BCFs (i.e., the FCM is 1.0), unless chemical-specific biomagnification data support using a FCM other than 1.0.

E. Because both humans and wildlife consume fish from both trophic levels 3 and 4, two baseline BAFs are needed to calculate either a human health criterion or value or a wildlife criterion for a chemical. When appropriate, ingestion through consumption of invertebrates, plants, mammals, and birds in the diet of wildlife species to be protected may be taken into account.

II. Definitions

Baseline BAF. For organic chemicals, a BAF that is based on the concentration of freely dissolved chemical in the ambient water and takes into account the partitioning of the chemical within the organism; for inorganic chemicals, a BAF that is based on the wet weight of the tissue.

Baseline BCF. For organic chemicals, a BCF that is based on the concentration of freely dissolved chemical in the ambient water and takes into account the partitioning of the chemical within the organism; for inorganic chemicals, a BCF that is based on the wet weight of the tissue.

Bioaccumulation. The net accumulation of a substance by an organism as a result of uptake from all environmental sources.

Bioaccumulation factor (BAF). The ratio (in L/kg) of a substance's concentration in tissue of an aquatic organism to its concentration in the ambient water, in situations where both the organism and its food are exposed to and the ratio does not change substantially over time.

Bioconcentration. The net accumulation of a substance by an aquatic organism as a result of uptake directly from the ambient water through gill membranes or other external body surfaces.

Bioconcentration factor (BCF). The ratio (in L/kg) of a substance's concentration in tissue of an aquatic organism to its concentration in the ambient water, in situations where the organism is exposed through the water only and the ratio does not change substantially over time.

Biota-sediment accumulation factor (BSAF). The ratio (in kg of organic carbon/kg of lipid) of a substance's lipid-normalized concentration in tissue of an aquatic organism to its organic carbon-normalized concentration in surface sediment, in situations where the ratio does not change substantially over time, both the organism and its food are exposed, and the surface sediment is representative of average surface sediment in the vicinity of the organism.

Depuration. The loss of a substance from an organism as a result of any active or passive process.

Food-chain multiplier (FCM). The ratio of a BAF to an appropriate BCF.

Octanol-water partition coefficient (K_{OW}). The ration of the concentration of a substance in the n-octanol phase to its concentration in the aqueous phase in an equilibrated two-phase octanol-water system. For log K_{OW}, the log of the octanol-water partition coefficient is a base 10 logarithm.

Uptake. Acquisition of a substance from the environment by an organism as a result of any active or passive process.

III. Review and Selection of Data

A. *Data Sources.* Measured BAFs, BSAFs and BCFs are assembled from available sources including the following:

1. EPA Ambient Water Quality Criteria documents issued after January 1, 1980.
2. Published scientific literature.
3. Reports issued by EPA or other reliable sources.
4. Unpublished data.

One useful source of references is the Aquatic Toxicity Information Retrieval (AQUIRE) database.

B. *Field-Measured BAFs.* The following procedural and quality assurance requirements shall be met for field-measured BAFs:

1. The field studies used shall be limited to those conducted in the Great Lakes System with fish at or near the top of the aquatic food chain (i.e., in trophic levels 3 and/or 4).
2. The trophic level of the fish species shall be determined.
3. The site of the field study should not be so unique that the BAF cannot be extrapolated to other locations where the criteria and values will apply.
4. For organic chemicals, the percent lipid shall be either measured or reliably estimated for the tissue used in the determination of the BAF.
5. The concentration of the chemical in the water shall be measured in a way that can be related to particulate organic carbon (POC) and/or dissolved organic carbon (DOC) and should be relatively constant during the steady-state time period.
6. For organic chemicals with log K_{ow} greater than four, the concentrations of POC and DOC in the ambient water shall be either measured or reliably estimated.
7. For inorganic and organic chemicals, BAFs shall be used only if they are expressed on a wet weight basis; BAFs reported on a dry weight basis cannot be converted to wet weight unless a conversion factor is measured or reliably estimated for the tissue used in the determination of the BAF.

C. *Field-Measured BSAFs.* The following procedural and quality assurance requirements shall be met for field-measured BSAFs:

1. The field studies used shall be limited to those conducted in the Great Lakes System

with fish at or near the top of the aquatic food chain (i.e., in trophic levels 3 and/or 4).

2. Samples of surface sediments (0–1 cm is ideal) shall be from locations in which there is net deposition of fine sediment and is representative of average surface sediment in the vicinity of the organism.

3. The K_{ow}s used shall be acceptable quality as described in section III.F below.

4. The site of the field study should not be so unique that the resulting BAF cannot be extrapolated to other locations where the criteria and values will apply.

5. The tropic level of the fish species shall be determined.

6. The percent lipid shall be either measured or reliably estimated for the tissue used in the determination of the BAF.

D. *Laboratory-Measured BCFs.* The following procedural and quality assurance requirements shall be met for laboratory-measured BCFs:

1. The test organism shall not be diseased, unhealthy, or adversely affected by the concentration of the chemical.

2. The total concentration of the chemical in the water shall be measured and should be relatively constant during the steady-state time period.

3. The organisms shall be exposed to the chemical using a flow-through or renewal procedure.

4. For organic chemicals, the percent lipid shall be either measured or reliably estimated for the tissue used in the determination of the BCF.

5. For organic chemicals with log K_{ow} greater than four, the concentrations of POC and DOC in the test solution shall be either measured or reliably estimated.

6. Laboratory-measured BCFs should be determined using fish species, but BCFs determined with molluscs and other invertebrates may be used with caution. For example, because invertebrates metabolize some chemicals less efficiently than vertebrates, a baseline BCF determined for such a chemical using invertebrates is expected to be higher than a comparable baseline BCF determined using fish.

7. If laboratory-measured BCFs increase or decrease as the concentration of the chemical increases in the test solutions in a bioconcentration test, the BCF measured at the lowest test concentration that is above concentrations existing in the control water shall be used (i.e., a BCF should be calculated from a control treatment). The concentrations of an inorganic chemical in a bioconcentration test should be greater than normal background levels and greater than levels required for normal nutrition of the test species if the chemical is a micronutrient, but below levels that adversely affect the species. Bioaccummulation of an inorganic chemical might be overestimated if concentrations are at or below normal background levels due to, for example, nutritional requirements of the test organisms.

8. For inorganic and organic chemicals, BCFs shall be used only if they are expressed on a wet weight basis. BCFs reported on a dry weight basis cannot be converted to wet weight unless a conversion factor is measured or reliably estimated for the tissue used in the determination of the BAF.

9. BCFs for organic chemicals may be based on measurement or radioactivity only when the BCF is intended to include metabolites or when there is confidence that there is no interference due to metabolites.

10. The calculation of the BCF must appropriately address growth dilution.

11. Other aspects of the methodology used should be similar to those described by ASTM (1990).

E. *Predicted BCFs.* The following procedural and quality assurance requirements shall be met for predicted BCFs:

1. The K_{ow} used shall be of acceptable quality as described in section III.F below.

2. The predicted baseline BCF shall be calculated using the equation: predicted baseline BCF = K_{ow}

where:

K_{ow} = octanol-water partition coefficient.

F. *Octanol-Water Partition Coefficient (K_{ow}).* 1. The value of K_{ow} used for an organic chemical shall be determined by giving priority to the experimental and computational techniques used as follows:

Log K_{ow} < 4:

Priority	Technique
1	Slow-stir.
1	Generator-column.
1	Shake-flask.
2	Reverse-phase liquid chromatography on C18 chromatography packing with extrapolation to zero percent solvent.
3	Reverse-phase liquid chromatography on C18 chromatography packing without extrapolation to zero percent solvent.
4	Calculated by the CLOGP program.

Log K_{ow} > 4:

Priority	Technique
1	Slow Stir.
1	Generator-column.
2	Reverse-phase liquid chromatography on C18 chromatography packing with extrapolation to zero percent solvent.
3	Reverse-phase liquid chromatography on C18 chromatography packing without extrapolation to zero percent solvent.
4	Shake-flask.
5	Calculated by the CLOGP program.

2. The CLOGP program is a computer program available from Pomona College. A value of K_{ow} that seems to be different from

the others should be considered an outlier and not used. The value of K_{ow} used for an organic chemical shall be the geometric mean of the available K_{ow}s with highest priority or can be calculated from the arithmetic mean of the available log K_{ow} with the highest priority. Because it is an intermediate value in the derivation of a BAF, the value used for the K_{ow} of a chemical should not be rounded to fewer than three significant digits and a value for log K_{ow} should not be rounded to fewer than three significant digits after the decimal point.

G. This methodology provides overall guidance for the derivation of BAFs, but it cannot cover all the decisions that must be made in the review and selection of acceptable data. Professional judgment is required throughout the process. A degree of uncertainty is associated with the determination of any BAF, BSAF, BCF or K_{ow}. The amount of uncertainty in a baseline BAF depends on both the quality of data available and the method used to derive the BAF.

H. Hereinafter in this methodology, the terms BAF, BSAF, BCF and K_{ow} refer to ones that are consistent with the procedural and quality assurance requirements given above.

IV. Four Methods for Deriving Baseline BAFs

Baseline BAFs shall be derived using the following four methods, which are listed from most preferred to least preferred:

A. A measured baseline BAF for an organic or inorganic chemical derived from a field study of acceptable quality.

B. A predicted baseline BAF for an organic chemical derived using field-measured BSAFs of acceptable quality.

C. A predicted baseline BAF for an organic or inorganic chemical derived from a BCF measured in a laboratory study of acceptable quality and a FCM.

D. A predicted baseline BAF for an organic chemical derived from a K_{ow} of acceptable quality and a FCM.

For comparative purposes, baseline BAFs should be derived for each chemical by as many of the four methods as available data allow.

V. Calculation of Baseline BAFs for Organic Chemicals

A. *Lipid Normalization*. 1. It is assumed that BAFs and BCFs for organic chemicals can be extrapolated on the basis of percent lipid from one tissue to another and from one aquatic species to another in most cases.

2. Because BAFs and BCFs for organic chemicals are related to the percent lipid, it does not make any difference whether the tissue sample is whole body or edible portion, but both the BAF (or BCF) and the percent lipid must be determined for the same tissue. The percent lipid of the tissue should be measured during the BAF or BCF study, but in some cases it can be reliably estimated from measurements on tissue from other organisms. If percent lipid is not reported for the test organisms in the original study, it may be obtained from the author; or, in the case of a laboratory study, lipid data for the same or a comparable laboratory population of test organisms that were used in the original study may be used.

3. The lipid-normalized concentration, C_l, of a chemical in tissue is defined using the following equation:

$$C_l = \frac{C_B}{f_l}$$

Where:

C_B=concentration of the organic chemical in the tissue of aquatic biota (either whole organism or specified tissue) (µg/g).

f_l=fraction of the tissue that is lipid.

B. *Bioavailability*. By definition, baseline BAFs and BCFs for organic chemicals, whether measured or predicted are based on the concentration of the chemical that is freely dissolved in the ambient water in order to account for bioavailability. For the purposes of this Guidance in this part, the relationship between the total concentration of the chemical in the water (i.e., that which is freely dissolved plus that which is sorbed to particulate organic carbon or to dissolved organic carbon) to the freely dissolved concentration of the chemical in the ambient water shall be calculated using the following equation:

$$C_w^{fd} = \left(f_{fd}\right)\left(C_w^t\right)$$

Where:

C^{fd}_w=freely dissolved concentration of the organic chemical in the ambient water;

C^t_w=total concentration of the organic chemical in the ambient water;

f_{fd}=fraction of the total chemical in the ambient water that is freely dissolved.

The fraction of the total chemical in the ambient water that is freely dissolved, f_{fd}, shall be calculated using the following equation:

$$f_{fd} = \frac{1}{1 + \frac{(DOC)(K_{ow})}{10} + (POC)(K_{ow})}$$

Where:

DOC=concentration of dissolved organic carbon, kg of dissolved organic carbon/L of water.

K_{OW}=octanol-water partition coefficient of the chemical.

POC=concentration of particulate organic carbon, kg of particulate organic carbon/L of water.

C. *Food-Chain Multiplier.* In the absence of a field-measured BAF or a predicted BAF derived from a BSAF, a FCM shall be used to calculate the baseline BAF for trophic levels 3 and 4 from a laboratory-measured or predicted BCF. For an organic chemical, the FCM used shall be derived from Table B–1 using the chemical's log K_{OW} and linear interpolation. A FCM greater than 1.0 applies to most organic chemicals with a log K_{OW} of four or more. The trophic level used shall take into account the age or size of the fish species consumed by the human, avian or mammalian predator because, for some species of fish, the young are in trophic level 3 whereas the adults are in trophic level 4.

D. *Calculation of a Baseline BAF from a Field-Measured BAF.* A baseline BAF shall be calculated from a field-measured BAF of acceptable quality using the following equation:

$$\text{Baseline BAF} = \left[\frac{\text{Measured BAF}_T^t}{f_{fd}} - 1\right]\left[\frac{1}{f_l}\right]$$

Where:

BAF^t_T=BAF based on total concentration in tissue and water.

f_l=fraction of the tissue that is lipid.

f_{fd}=fraction of the total chemical that is freely dissolved in the ambient water.

The trophic level to which the baseline BAF applies is the same as the trophic level of the organisms used in the determination of the field-measured BAF. For each trophic level, a species mean measured baseline BAF shall be calculated as the geometric mean if more than one measured baseline BAF is available for a given species. For each trophic level, the geometric mean of the species mean measured baseline BAFs shall be calculated. If a baseline BAF based on a measured BAF is available for either trophic level 3 or 4, but not both, a measured baseline BAF for the other trophic level shall be calculated using the ratio of the FCMs that are obtained by linear interpolation from Table B–1 for the chemical.

E. *Calculation of a Baseline BAF from a Field-Measured BSAF.* 1. A baseline BAF for organic chemical ''i'' shall be calculated from a field-measured BSAF of acceptable quality using the following equation:

$$(\text{Baseline BAF})_i = (\text{Baseline BAF})_r \cdot \frac{(\text{BSAF})_i \cdot (K_{ow})_i}{(\text{BSAF})_r \cdot (K_{ow})_r}$$

Where:

$(BSAF)_i$=BSAF for chemical ''i''.

$(BSAF)_r$=BSAF for the reference chemical ''r''.

$(K_{OW})_i$=octanol-water partition coefficient for chemical ''i''.

$(K_{OW})_r$=octanol-water partition coefficient for the reference chemical ''r''.

2. A BSAF shall be calculated using the following equation:

$$\text{BSAF} = \frac{C_l}{C_{SOC}}$$

Where:

C_t=the lipid-normalized concentration of the chemical in tissue.

C_{SOC}=the organic carbon-normalized concentration of the chemical in sediment.

3. The organic carbon-normalized concentration of a chemical in sediment, C_{SOC}, shall be calculated using the following equation:

$$C_{SOC} = \frac{C_S}{f_{OC}}$$

Where:

C_S=concentration of chemical in sediment (μg/g sediment).

f_{OC}=fraction of the sediment that is organic carbon.

4. Predicting BAFs from BSAFs requires data from a steady-state (or near steady-state) condition between sediment and ambient water for both a reference chemical ''r'' with a field-measured BAF_r^{fd} and other chemicals ''n=i'' for which BSAFs are to be determined.

5. The trophic level to which the baseline BAF applies is the same as the trophic level of the organisms used in the determination of the BSAF. For each trophic level, a species mean baseline BAF shall be calculated as the geometric mean if more than one baseline BAF is predicted from BSAFs for a given species. For each trophic level, the geometric mean of the species mean baseline BAFs derived using BSAFs shall be calculated.

6. If a baseline BAF based on a measured BSAF is available for either trophic level 3 or 4, but not both, a baseline BAF for the other trophic level shall be calculated using the ratio of the FCMs that are obtained by linear interpolation from Table B–1 for the chemical.

F. *Calculation of a Baseline BAF from a Laboratory-Measured BCF.* A baseline BAF for trophic level 3 and a baseline BAF for trophic level 4 shall be calculated from a laboratory-measured BCF of acceptable quality and a FCM using the following equation:

$$\text{Baseline BAF} = (\text{FCM})\left[\frac{\text{Measured BCF}_T^t}{f_{fd}} - 1\right]\left[\frac{1}{f_l}\right]$$

Where:

BCF^t_T=BCF based on total concentration in tissue and water.

f_l=fraction of the tissue that is lipid.

f_{fd}=fraction of the total chemical in the test water that is freely dissolved.

FCM=the food-chain multiplier obtained from Table B–1 by linear interpolation for trophic level 3 or 4, as necessary.

For each trophic level, a species mean baseline BAF shall be calculated as the geometric mean if more than one baseline BAF is predicted from laboratory-measured BCFs for a given species. For each trophic level, the geometric mean of the species mean baseline BAFs based on laboratory-measured BCFs shall be calculated.

G. *Calculation of a Baseline BAF from an Octanol-Water Partition Coefficient.* A baseline BAF for trophic level 3 and a baseline BAF for trophic level 4 shall be calculated from a K_{OW} of acceptable quality and a FCM using the following equation:

Baseline BAF=(FCM) (predicted baseline BCF)=(FCM) (K_{OW})

Where:

FCM=the food-chain multiplier obtained from Table B–1 by linear interpolation for trophic level 3 or 4, as necessary.

K_{OW}=octanol-water partition coefficient.

VI. Human Health and Wildlife BAFs for Organic Chemicals

A. To calculate human health and wildlife BAFs for an organic chemical, the K_{OW} of the chemical shall be used with a POC concentration of 0.00000004 kg/L and a DOC concentration of 0.000002 kg/L to yield the fraction freely dissolved:

$$f_{fd} = \frac{1}{1 + \frac{(DOC)(K_{ow})}{10} + (POC)(K_{ow})}$$

$$= \frac{1}{1 + \frac{(0.000002\ kg/L)(K_{ow})}{10} + (0.00000004\ kg/L)(K_{ow})}$$

$$= \frac{1}{1 + (0.00000024\ kg/L)(K_{ow})}$$

B. The human health BAFs for an organic chemical shall be calculated using the following equations:

For trophic level 3:

$$\text{Human Health BAF}_{TL3}^{HH} = [(\text{baseline BAF})(0.0182) + 1](f_{fd})$$

For trophic level 4:

$$\text{Human Health BAF}_{TL4}^{HH} = [(\text{baseline BAF})(0.0310) + 1](f_{fd})$$

Where:

0.0182 and 0.0310 are the standardized fraction lipid values for trophic levels 3 and 4, respectively, that are used to derive human health criteria and values for the GLI.

C. The wildlife BAFs for an organic chemical shall be calculated using the following equations:

For trophic level 3:

$$\text{Wildlife BAF}_{TL3}^{WL} = [(\text{baseline BAF})(0.0646) + 1](f_{fd})$$

For trophic level 4:

$$\text{Wildlife BAF}_{TL4}^{WL} = [(\text{baseline BAF})(0.1031) + 1](f_{fd})$$

Where:

0.0646 and 0.1031 are the standardized fraction lipid values for trophic levels 3 and 4, respectively, that are used to derive wildlife criteria for the GLI.

VII. Human Health and Wildlife BAFs for Inorganic Chemicals

A. For inorganic chemicals, the baseline BAFs for trophic levels 3 and 4 are both assumed to equal the BCF determined for the chemical with fish, i.e., the FCM is assumed

to be 1 for both trophic levels 3 and 4. However, a FCM greater than 1 might be applicable to some metals, such as mercury, if, for example, an organometallic form of the metal biomagnifies.

B. *BAFs for Human Health Criteria and Values.*

1. Measured BAFs and BCFs used to determine human health BAFs for inorganic chemicals shall be based on edible tissue (e.g., muscle) of freshwater fish unless it is demonstrated that whole-body BAFs or BCFs are similar to edible-tissue BAFs or BCFs. BCFs and BAFs based on measurements of aquatic plants and invertebrates should not be used in the derivation of human health criteria and values.

2. If one or more field-measured baseline BAFs for an inorganic chemical are available from studies conducted in the Great Lakes System with the muscle of fish:

a. For each trophic level, a species mean measured baseline BAF shall be calculated as the geometric mean if more than one measured BAF is available for a given species; and

b. For each trophic level, the geometric mean of the species mean measured baseline BAFs shall be used as the human health BAF for that chemical.

3. If an acceptable measured baseline BAF is not available for an inorganic chemical and one or more acceptable edible-portion laboratory-measured BCFs are available for the chemical, a predicted baseline BAF shall be calculated by multiplying the geometric mean of the BCFs times a FCM. The FCM will be 1.0 unless chemical-specific biomagnification data support using a multiplier other than 1.0. The predicted baseline BAF shall be used as the human health BAF for that chemical.

C. *BAFs for Wildlife Criteria.*

1. Measured BAFs and BCFs used to determine wildlife BAFs for inorganic chemicals shall be based on whole-body freshwater fish and invertebrate data unless it is demonstrated that edible-tissue BAFs or BCFs are similar to whole-body BAFs or BCFs.

2. If one or more field-measured baseline BAFs for an inorganic chemical are available from studies conducted in the Great Lakes System with whole body of fish or invertebrates:

a. For each trophic level, a species mean measured baseline BAF shall be calculated as the geometric mean if more than one measured BAF is available for a given species.

b. For each trophic level, the geometric mean of the species mean measured baseline BAFs shall be used as the wildlife BAF for that chemical.

3. If an acceptable measured baseline BAF is not available for an inorganic chemical and one or more acceptable whole-body laboratory-measured BCFs are available for the chemical, a predicted baseline BAF shall be calculated by multiplying the geometric mean of the BCFs times a FCM. The FCM will be 1.0 unless chemical-specific biomagnification data support using a multiplier other than 1.0. The predicted baseline BAF shall be used as the wildlife BAF for that chemical.

VIII. Final Review

For both organic and inorganic chemicals, human health and wildlife BAFs for both trophic levels shall be reviewed for consistency with all available data concerning the bioaccumulation, bioconcentration, and metabolism of the chemical. For example, information concerning octanol-water partitioning, molecular size, or other physicochemical properties that might enhance or inhibit bioaccumulation should be considered for organic chemicals. BAFs derived in accordance with this methodology should be modified if changes are justified by available data.

IX. Literature Cited

ASTM. 1990. Standard Practice for Conducting Bioconcentration Tests with Fishes and Saltwater Bivalve Molluscs. Standard E 1022. American Society for Testing and Materials, Philadelphia, PA.

TABLE B–1.—FOOD-CHAIN MULTIPLIERS FOR TROPHIC LEVELS 2, 3 & 4

Log K_{ow}	Trophic level 2	Trophic[1] level 3	Trophic level 4
2.0	1.000	1.005	1.000
2.5	1.000	1.010	1.002
3.0	1.000	1.028	1.007
3.1	1.000	1.034	1.007
3.2	1.000	1.042	1.009
3.3	1.000	1.053	1.012
3.4	1.000	1.067	1.014
3.5	1.000	1.083	1.019
3.6	1.000	1.103	1.023
3.7	1.000	1.128	1.033
3.8	1.000	1.161	1.042
3.9	1.000	1.202	1.054
4.0	1.000	1.253	1.072
4.1	1.000	1.315	1.096
4.2	1.000	1.380	1.130
4.3	1.000	1.491	1.178
4.4	1.000	1.614	1.242
4.5	1.000	1.766	1.334
4.6	1.000	1.950	1.459
4.7	1.000	2.175	1.633
4.8	1.000	2.452	1.871
4.9	1.000	2.780	2.193
5.0	1.000	3.181	2.612
5.1	1.000	3.643	3.162
5.2	1.000	4.188	3.873
5.3	1.000	4.803	4.742
5.4	1.000	5.502	5.821
5.5	1.000	6.266	7.079
5.6	1.000	7.096	8.551
5.7	1.000	7.962	10.209
5.8	1.000	8.841	12.050
5.9	1.000	9.716	13.964
6.0	1.000	10.556	15.996

TABLE B–1.—FOOD-CHAIN MULTIPLIERS FOR TROPHIC LEVELS 2, 3 & 4—Continued

Log K_{ow}	Trophic level 2	Trophic[1] level 3	Trophic level 4
6.1	1.000	11.337	17.783
6.2	1.000	12.064	19.907
6.3	1.000	12.691	21.677
6.4	1.000	13.228	23.281
6.5	1.000	13.662	24.604
6.6	1.000	13.980	25.645
6.7	1.000	14.223	26.363
6.8	1.000	14.355	26.669
6.9	1.000	14.388	26.669
7.0	1.000	14.305	26.242
7.1	1.000	14.142	25.468
7.2	1.000	13.852	24.322
7.3	1.000	13.474	22.856
7.4	1.000	12.987	21.038
7.5	1.000	12.517	18.967
7.6	1.000	11.708	16.749
7.7	1.000	10.914	14.388
7.8	1.000	10.069	12.050
7.9	1.000	9.162	9.840
8.0	1.000	8.222	7.798
8.1	1.000	7.278	6.012
8.2	1.000	6.361	4.519
8.3	1.000	5.489	3.311
8.4	1.000	4.683	2.371
8.5	1.000	3.949	1.663
8.6	1.000	3.296	1.146
8.7	1.000	2.732	0.778
8.8	1.000	2.246	0.521
8.9	1.000	1.837	0.345
9.0	1.000	1.493	0.226

[1] The FCMs for trophic level 3 are the geometric mean of the FCMs for sculpin and alewife.

APPENDIX C TO PART 132—GREAT LAKES WATER QUALITY INITIATIVE METHODOLOGIES FOR DEVELOPMENT OF HUMAN HEALTH CRITERIA AND VALUES

Great Lakes States and Tribes shall adopt provisions consistent with (as protective as) this appendix.

I. INTRODUCTION

Great Lakes States and Tribes shall adopt provisions consistent with this appendix C to ensure protection of human health.

A. *Goal.* The goal of the human health criteria for the Great Lakes System is the protection of humans from unacceptable exposure to toxicants via consumption of contaminated fish and drinking water and from ingesting water as a result of participation in water-oriented recreational activities.

B. *Definitions.*

Acceptable daily exposure (ADE). An estimate of the maximum daily dose of a substance which is not expected to result in adverse noncancer effects to the general human population, including sensitive subgroups.

Adverse effect. Any deleterious effect to organisms due to exposure to a substance. This includes effects which are or may become debilitating, harmful or toxic to the normal functions of the organism, but does not include non-harmful effects such as tissue discoloration alone or the induction of enzymes involved in the metabolism of the substance.

Carcinogen. A substance which causes an increased incidence of benign or malignant neoplasms, or substantially decreases the time to develop neoplasms, in animals or humans. The classification of carcinogens is discussed in section II.A of appendix C to part 132.

Human cancer criterion (HCC). A Human Cancer Value (HCV) for a pollutant that meets the minimum data requirements for Tier I specified in appendix C.

Human cancer value (HCV). The maximum ambient water concentration of a substance at which a lifetime of exposure from either: drinking the water, consuming fish from the water, and water-related recreation activities; or consuming fish from the water, and water-related recreation activities, will represent a plausible upper-bound risk of contracting cancer of one in 100,000 using the exposure assumptions specified in the Methodologies for the Development of Human Health Criteria and Values in appendix C of this part.

Human noncancer criterion (HNC). A Human Noncancer Value (HNV) for a pollutant that meets the minimum data requirements for Tier I specified in appendix C of this part.

Human noncancer value (HNV). The maximum ambient water concentration of a substance at which adverse noncancer effects are not likely to occur in the human population from lifetime exposure via either: drinking the water, consuming fish from the water, and water-related recreation activities; or consuming fish from the water, and water-related recreation activities using the Methodologies for the Development of Human Health criteria and Values in appendix C of this part.

Linearized multi-stage model. A conservative mathematical model for cancer risk assessment. This model fits linear dose-response curves to low doses. It is consistent with a no-threshold model of carcinogenesis, i.e., exposure to even a very small amount of the substance is assumed to produce a finite increased risk of cancer.

Lowest observed adverse effect level (LOAEL). The lowest tested dose or concentration of a substance which resulted in an observed adverse effect in exposed test organisms when all higher doses or concentrations resulted in the same or more severe effects.

No observed adverse effect level (NOAEL). The highest tested dose or concentration of a substance which resulted in no observed adverse effect in exposed test organisms where higher doses or concentrations resulted in an adverse effect.

Quantitative structure activity relationship (OSAR) or structure activity relationship (SAR). A mathematical relationship between a

property (activity) of a chemical and a number of descriptors of the chemical. These descriptors are chemical or physical characteristics obtained experimentally or predicted from the structure of the chemical.

Relative source contribution (RSC). The factor (percentage) used in calculating an HNV or HNC to account for all sources of exposure to a contaminant. The RSC reflects the percent of total exposure which can be attributed to surface water through water intake and fish consumption.

Risk associated dose (RAD). A dose of a known or presumed carcinogenic substance in (mg/kg/day) which, over a lifetime of exposure, is estimated to be associated with a plausible upper bound incremental cancer risk equal to one in 100,000.

Slope factor. Also known as q_1*, slope factor is the incremental rate of cancer development calculated through use of a linearized multistage model or other appropriate model. It is expressed in (mg/kg/day) of exposure to the chemical in question.

Threshold effect. An effect of a substance for which there is a theoretical or empirically established dose or concentration below which the effect does not occur.

Uncertainty factor (UF). One of several numeric factors used in operationally deriving criteria from experimental data to account for the quality or quantity of the available data.

C. *Level of Protection.* The criteria developed shall provide a level of protection likely to be without appreciable risk of carcinogenic and/or noncarcinogenic effects. Criteria are a function of the level of designated risk or no adverse effect estimation, selection of data and exposure assumptions. Ambient criteria for single carcinogens shall not be set at a level representing a lifetime upper-bound incremental risk greater than one in 100,000 of developing cancer using the hazard assessment techniques and exposure assumptions described herein. Criteria affording protection from noncarcinogenic effects shall be established at levels that, taking into account uncertainties, are considered likely to be without an appreciable risk of adverse human health effects (i.e., acute, subchronic and chronic toxicity including reproductive and developmental effects) during a lifetime of exposure, using the risk assessment techniques and exposure assumptions described herein.

D. *Two-tiered Classification.* Chemical concentration levels in surface water protective of human health shall be derived based on either a Tier I or Tier II classification. The two Tiers are primarily distinguished by the amount of toxicity data available for deriving the concentration levels and the quantity and quality of data on bioaccumulation.

II. MINIMUM DATA REQUIREMENTS

The best available toxicity data on the adverse health effects of a chemical and the best data on bioaccumulation factors shall be used when developing human health Tier I criteria or Tier II values. The best available toxicity data shall include data from well-conducted epidemiologic and/or animal studies which provide, in the case of carcinogens, an adequate weight of evidence of potential human carcinogenicity and, in the case of noncarcinogens, a dose-response relationship involving critical effects biologically relevant to humans. Such information should be obtained from the EPA Integrated Risk Information System (IRIS) database, the scientific literature, and other informational databases, studies and/or reports containing adverse health effects data of adequate quality for use in this procedure. Strong consideration shall be given to the most currently available guidance provided by IRIS in deriving criteria or values, supplemented with any recent data not incorporated into IRIS. When deviations from IRIS are anticipated or considered necessary, it is strongly recommended that such actions be communicated to the EPA Reference Dose (RfD) and/or the Cancer Risk Assessment Verification Endeavor (CRAVE) workgroup immediately. The best available bioaccumulation data shall include data from field studies and well-conducted laboratory studies.

A. *Carcinogens.* Tier I criteria and Tier II values shall be derived using the methodologies described in section III.A of this appendix when there is adequate evidence of potential human carcinogenic effects for a chemical. It is strongly recommended that the EPA classification system for chemical carcinogens, which is described in the 1986 EPA Guidelines for Carcinogenic Risk Assessment (U.S. EPA, 1986), or future modifications thereto, be used in determining whether adequate evidence of potential carcinogenic effects exists. Carcinogens are classified, depending on the weight of evidence, as either human carcinogens, probable human carcinogens, or possible human carcinogens. The human evidence is considered inadequate and therefore the chemical cannot be classified as a human carcinogen, if one of two conditions exists: (a) there are few pertinent data, or (b) the available studies, while showing evidence of association, do not exclude chance, bias, or confounding and therefore a casual interpretation is not credible. The animal evidence is considered inadequate, and therefore the chemical cannot be classified as a probable or possible human carcinogen, when, because of major qualitative or quantitative limitations, the evidence cannot be interpreted as showing either the presence or absence of a carcinogenic effect.

Chemicals are described as ''human carcinogens'' when there is sufficient evidence from epidemiological studies to support a causal association between exposure to the chemicals and cancer. Chemicals described as ''probable human carcinogens'' include chemicals for which the weight of evidence of human carcinogenicity based on epidemiological studies is limited. Limited human evidence is that which indicates that a causal interpretation is credible, but that alternative explanations, such as chance, bias, or confounding, cannot adequately be excluded. Probable human carcinogens are also agents for which there is sufficient evidence from animal studies and for which there is inadequate evidence or no data from epidemiologic studies. Sufficient animal evidence is data which indicates that there is an increased incidence of malignant tumors or combined malignant and benign tumors: (a) in multiple species or strains; (b) in multiple experiments (e.g., with different routes of administration or using different dose levels); or (c) to an unusual degree in a single experiment with regard to high incidence, unusual site or type of tumor, or early age at onset. Additional evidence may be provided by data on dose-response effects, as well as information from short-term tests (such as mutagenicity/genotoxicity tests which help determine whether the chemical interacts directly with DNA) or on chemical structure, metabolism or mode of action.

''Possible human carcinogens'' are chemicals with limited evidence of carcinogenicity in animals in the absence of human data. Limited animal evidence is defined as data which suggests a carcinogenic effect but are limited because: (a) The studies involve a single species, strain, or experiment and do not meet criteria for sufficient evidence (see preceding paragraph); or (b) the experiments are restricted by inadequate dosage levels, inadequate duration of exposure to the agent, inadequate period of follow-up, poor survival, too few animals, or inadequate reporting; or (c) the studies indicate an increase in the incidence of benign tumors only. More specifically, this group can include a wide variety of evidence, e.g., (a) a malignant tumor response in a single well-conducted experiment that does not meet conditions for sufficient evidence, (b) tumor response of marginal statistical significance in studies having inadequate design or reporting, (c) benign but not malignant tumors with an agent showing no response in a variety of short-term tests for mutagenicity, and (d) response of marginal statistical significance in a tissue known to have a high or variable background rate.

1. *Tier I:* Weight of evidence of potential human carcinogenic effects sufficient to derive a Tier I HCC shall generally include human carcinogens, probable human carcinogens and can include, on a case-by-case basis, possible human carcinogens if studies have been well-conducted albeit based on limited evidence, when compared to studies used in classifying human and probable human carcinogens. The decision to use data on a possible human carcinogen for deriving Tier I criteria shall be a case-by-case determination. In determining whether to derive a Tier I HCC, additional evidence that shall be considered includes but is not limited to available information on mode of action, such as mutagenicity/genotoxicity (determinations of whether the chemical interacts directly with DNA), structure activity, and metabolism.

2. *Tier II:* Weight of evidence of possible human carcinogenic effects sufficient to derive a Tier II human cancer value shall include those possible human carcinogens for which there are at a minimum, data sufficient for quantitative risk assessment, but for which data are inadequate for Tier I criterion development due to a tumor response of marginal statistical significance or inability to derive a strong dose-response relationship. In determining whether to derive Tier II human cancer values, additional evidence that shall be considered includes but is not limited to available information on mode of action such as mutagenicity/genotoxicity (determinations of whether the chemical interacts directly with DNA), structure activity and metabolism. As with the use of data on possible human carcinogens in developing Tier I criteria, the decision to use data on possible human carcinogens to derive Tier II values shall be made on a case-by-case basis.

B. *Noncarcinogens.* All available toxicity data shall be evaluated considering the full range of possible health effects of a chemical, i.e., acute/subacute, chronic/subchronic and reproductive/developmental effects, in order to best describe the dose-response relationship of the chemical, and to calculate human noncancer criteria and values which will protect against the most sensitive endpoint(s) of toxicity. Although it is desirable to have an extensive database which considers a wide range of possible adverse effects, this type of data exists for a very limited number of chemicals. For many others, there is a range in quality and quantity of data available. To assure minimum reliability of criteria and values, it is necessary to establish a minimum database with which to develop Tier I criteria or Tier II values. The following represent the minimum data sets necessary for this procedure.

1. *Tier I:* The minimum data set sufficient to derive a Tier I human HNC shall include at least one well-conducted epidemiologic study or animal study. A well-conducted epidemiologic study for a Tier I HNC must quantify exposure level(s) and demonstrate positive association between exposure to a chemical and adverse effect(s) in humans. A

well-conducted study in animals must demonstrate a dose response relationship involving one or more critical effect(s) biologically relevant to humans. (For example, study results from an animal whose pharmacokinetics and toxicokinetics match those of a human would be considered most biologically relevant.) Ideally, the duration of a study should span multiple generations of exposed test species or at least a major portion of the lifespan of one generation. This type of data is currently very limited. By the use of uncertainty adjustments, shorter term studies (such as 90-day subchronic studies) with evaluation of more limited effect(s) may be used to extrapolate to longer exposures or to account for a variety of adverse effects. For Tier I criteria developed pursuant to this procedure, such a limited study must be conducted for at least 90 days in rodents or 10 percent of the lifespan of other appropriate test species and demonstrate a no observable adverse effect level (NOAEL). Chronic studies of one year or longer in rodents or 50 percent of the lifespan or greater in other appropriate test species that demonstrate a lowest observable adverse effect level (LOAEL) may be sufficient for use in Tier I criterion derivation if the effects observed at the LOAEL were relatively mild and reversible as compared to effects at higher doses. This does not preclude the use of a LOAEL from a study (of chronic duration) with only one or two doses if the effects observed appear minimal when compared to effect levels observed at higher doses in other studies.

2. *Tier II:* When the minimum data for deriving Tier I criteria are not available to meet the Tier I data requirements, a more limited database may be considered for deriving Tier II values. As with Tier I criteria, all available data shall be considered and ideally should address a range of adverse health effects with exposure over a substantial portion of the lifespan (or multiple generations) of the test species. When such data are lacking it may be necessary to rely on less extensive data in order to establish a Tier II value. With the use of appropriate uncertainty factors to account for a less extensive database, the minimum data sufficient to derive a Tier II value shall include a NOAEL from at least one well-conducted short-term repeated dose study. This study shall be of at least 28 days duration, in animals demonstrating a dose-response, and involving effects biologically relevant to humans. Data from studies of longer duration (greater than 28 days) and LOAELs from such studies (greater than 28 days) may be more appropriate in some cases for derivation of Tier II values. Use of a LOAEL should be based on consideration of the following information: severity of effect, quality of the study and duration of the study.

C. *Bioaccumulation factors (BAFs).*

1. *Tier I for Carcinogens and Noncarcinogens:* To be considered a Tier I cancer or noncancer human health criterion, along with satisfying the minimum toxicity data requirements of sections II.A.1 and II.B.1 of this appendix, a chemical must have the following minimum bioaccumulation data. For all organic chemicals either: (a) a field-measured BAF; (b) a BAF derived using the BSAF methodology; or (c) a chemical with a BAF less than 125 regardless of how the BAF was derived. For all inorganic chemicals, including organometals such as mercury, either: (a) a field-measured BAF or (b) a laboratory-measured BCF.

2. *Tier II for Carcinogens and Noncarcinogens:* A chemical is considered a Tier II cancer or noncancer human health value if it does not meet either the minimum toxicity data requirements of sections II.A.1 and II.B.1 of this appendix or the minimum bioaccumulation data requirements of section II.C.1 of this appendix.

III. Principles for Development of Tier I Criteria or Tier II Values

The fundamental components of the procedure to calculate Tier I criteria or Tier II values are the same. However, certain of the aspects of the procedure designed to account for short-duration studies or other limitations in data are more likely to be relevant in deriving Tier II values than Tier I criteria.

A. *Carcinogens.*

1. A non-threshold mechanism of carcinogenesis shall be assumed unless biological data adequately demonstrate the existence of a threshold on a chemical-specific basis.

2. All appropriate human epidemiologic data and animal cancer bioassay data shall be considered. Data specific to an environmentally appropriate route of exposure shall be used. Oral exposure should be used preferentially over dermal and inhalation since, in most cases, the exposure routes of greatest concern are fish consumption and drinking water/incidental ingestion. The risk associated dose shall be set at a level corresponding to an incremental cancer risk of one in 100,000. If acceptable human epidemiologic data are available for a chemical, it shall be used to derive the risk associated dose. If acceptable human epidemiologic data are not available, the risk associated dose shall be derived from available animal bioassay data. Data from a species that is considered most biologically relevant to humans (i.e., responds most like humans) is preferred where all other considerations regarding quality of data are equal. In the absence of data to distinguish the most relevant species, data from the most sensitive species tested, i.e., the species showing a carcinogenic effect at the lowest administered dose, shall generally be used.

3. When animal bioassay data are used and a non-threshold mechanism of carcinogenicity is assumed, the data are fitted to a linearized multistage computer model (e.g., Global '86 or equivalent model). Global '86 is the linearized multistage model, derived by Howe, Crump and Van Landingham (1986), which EPA uses to determine cancer potencies. The upper-bound 95 percent confidence limit on risk (or, the lower 95 percent confidence limit on dose) at the one in 100,000 risk level shall be used to calculate a risk associated dose (RAD). Other models, including modifications or variations of the linear multistage model which are more appropriate to the available data may be used where scientifically justified.

4. If the duration of the study is significantly less than the natural lifespan of the test animal, the slope may be adjusted on a case-by-case basis to compensate for latent tumors which were not expressed (e.g., U.S. EPA, 1980) In the absence of alternative approaches which compensate for study durations significantly less than lifetime, the permitting authority may use the process described in the 1980 National Guidelines (see 45 FR 79352).

5. A species scaling factor shall be used to account for differences between test species and humans. It shall be assumed that milligrams per surface area per day is an equivalent dose between species (U.S. EPA, 1986). All doses presented in mg/kg bodyweight will be converted to an equivalent surface area dose by raising the mg/kg dose to the 2/3 power. However, if adequate pharmacokinetic and metabolism studies are available, these data may be factored into the adjustment for species differences on a case-by-case basis.

6. Additional data selection and adjustment decisions must also be made in the process of quantifying risk. Consideration must be given to tumor selection for modeling, e.g., pooling estimates for multiple tumor types and identifying and combining benign and malignant tumors. All doses shall be adjusted to give an average daily dose over the study duration. Adjustments in the rate of tumor response must be made for early mortality in test species. The goodness-of-fit of the model to the data must also be assessed.

7. When a linear, non-threshold dose response relationship is assumed, the RAD shall be calculated using the following equation:

$$RAD = \frac{0.00001}{q_1^*}$$

Where:

RAD=risk associated dose in milligrams of toxicant per kilogram body weight per day (mg/kg/day).

0.00001 (1×10^{-5})=incremental risk of developing cancer equal to one in 100,000.

q_1^*=slope factor $(mg/kg/day)^{-1}$.

8. If human epidemiologic data and/or other biological data (animal) indicate that a chemical causes cancer via a threshold mechanism, the risk associated dose may, on a case-by-case basis, be calculated using a method which assumes a threshold mechanism is operative.

B. *Noncarcinogens.*

1. Noncarcinogens shall generally be assumed to have a threshold dose or concentration below which no adverse effects should be observed. Therefore, the Tier I criterion or Tier II value is the maximum water concentration of a substance at or below which a lifetime exposure from drinking the water, consuming fish caught in the water, and ingesting water as a result of participating in water-related recreation activities is likely to be without appreciable risk of deleterious effects.

For some noncarcinogens, there may not be a threshold dose below which no adverse effects should be observed. Chemicals acting as genotoxic teratogens and germline mutagens are thought to possibly produce reproductive and/or developmental effects via a genetically linked mechanism which may have no threshold. Other chemicals also may not demonstrate a threshold. Criteria for these types of chemicals will be established on a case-by-case basis using appropriate assumptions reflecting the likelihood that no threshold exists.

2. All appropriate human and animal toxicologic data shall be reviewed and evaluated. To the maximum extent possible, data most specific to the environmentally relevant route of exposure shall be used. Oral exposure data should be used preferentially over dermal and inhalation since, in most cases, the exposure routes of greatest concern are fish consumption and drinking water/incidental ingestion. When acceptable human data are not available (e.g., well-conducted epidemiologic studies), animal data from species most biologically relevant to humans shall be used. In the absence of data to distinguish the most relevant species, data from the most sensitive animal species tested, i.e., the species showing a toxic effect at the lowest administered dose (given a relevant route of exposure), should generally be used.

3. Minimum data requirements are specified in section II.B of this appendix. The experimental exposure level representing the highest level tested at which no adverse effects were demonstrated (NOAEL) from studies satisfying the provisions of section II.B of this appendix shall be used for criteria calculations. In the absence of a NOAEL, the LOAEL from studies satisfying the provisions of section II.B of this appendix may be

used if it is based on relatively mild and reversible effects.

4. Uncertainty factors shall be used to account for the uncertainties in predicting acceptable dose levels for the general human population based upon experimental animal data or limited human data.

a. An uncertainty factor of 10 shall generally be used when extrapolating from valid experimental results from studies on prolonged exposure to average healthy humans. This 10-fold factor is used to protect sensitive members of the human population.

b. An uncertainty factor of 100 shall generally be used when extrapolating from valid results of long-term studies on experimental animals when results of studies of human exposure are not available or are inadequate. In comparison to a, above, this represents an additional 10-fold uncertainty factor in extrapolating data from the average animal to the average human.

c. An uncertainty factor of up to 1000 shall generally be used when extrapolating from animal studies for which the exposure duration is less than chronic, but greater than subchronic (e.g., 90 days or more in length), or when other significant deficiencies in study quality are present, and when useful long-term human data are not available. In comparison to b, above, this represents an additional UF of up to 10-fold for less than chronic, but greater than subchronic, studies.

d. An UF of up to 3000 shall generally be used when extrapolating from animal studies for which the exposure duration is less than subchronic (e.g., 28 days). In comparison to b above, this represents an additional UF of up to 30-fold for less than subchronic studies (e.g., 28-day). The level of additional uncertainty applied for less than chronic exposures depends on the duration of the study used relative to the lifetime of the experimental animal.

e. An additional UF of between one and ten may be used when deriving a criterion from a LOAEL. This UF accounts for the lack of an identifiable NOAEL. The level of additional uncertainty applied may depend upon the severity and the incidence of the observed adverse effect.

f. An additional UF of between one and ten may be applied when there are limited effects data or incomplete sub-acute or chronic toxicity data (e.g., reproductive/developmental data). The level of quality and quantity of the experimental data available as well as structure-activity relationships may be used to determine the factor selected.

g. When deriving an UF in developing a Tier I criterion or Tier II value, the total uncertainty, as calculated following the guidance of sections 4.a through f, cited above, shall not exceed 10,000 for Tier I criteria and 30,000 for Tier II values.

5. All study results shall be converted, as necessary, to the standard unit for acceptable daily exposure of milligrams of toxicant per kilogram of body weight per day (mg/kg/day). Doses shall be adjusted for continuous exposure (i.e., seven days/week, 24 hours/day, etc.).

C. *Criteria and Value Derivation.*

1. *Standard Exposure Assumptions.* The following represent the standard exposure assumptions used to calculate Tier I criteria and Tier II values for carcinogens and noncarcinogens. Higher levels of exposure may be assumed by States and Tribes pursuant to Clean Water Act (CWA) section 510, or where appropriate in deriving site-specific criteria pursuant to procedure 1 in appendix F to part 132.

BW = body weight of an average human (BW = 70kg).

WC_d = per capita water consumption (both drinking and incidental exposure) for surface waters classified as public water supplies = two liters/day.

—or—

WC_r = per capita incidental daily water ingestion for surface waters not used as human drinking water sources = 0.01 liters/day.

FC = per capita daily consumption of regionally caught freshwater fish = 0.015kg/day (0.0036 kg/day for trophic level 3 and 0.0114 kg/day for trophic level 4).

BAF = bioaccumulation factor for trophic level 3 and trophic level 4, as derived using the BAF methodology in appendix B to part 132.

2. *Carcinogens.* The Tier I human cancer criteria or Tier II values shall be calculated as follows:

$$HCV = \frac{RAD \times BW}{WC + \left[\left(FC_{TL3} \times BAF_{TL3}^{HH}\right) + \left(FC_{TL4} \times BAF_{TL4}^{HH}\right)\right]}$$

Where:

HCV=Human Cancer Value in milligrams per liter (mg/L).

RAD=Risk associated dose in milligrams toxicant per kilogram body weight per day (mg/kg/day) that is associated with a lifetime incremental cancer risk equal to one in 100,000.

BW=weight of an average human (BW=70 kg).

WC_d=per capita water consumption (both drinking and incidental exposure) for surface waters classified as public water supplies=two liters/day.

or

WC_r=per capita incidental daily water ingestion for surface waters not used as human drinking water sources=0.01 liters/day.

FC_{TL3}=mean consumption of trophic level 3 of regionally caught freshwater fish=0.0036 kg/day.

FC_{TL4}=mean consumption of trophic level 4 of regionally caught freshwater fish=0.0114 kg/day.

BAF^{HH}_{TL3}=bioaccumulation factor for trophic level 3 fish, as derived using the BAF methodology in appendix B to part 132.

BAF^{HH}_{TL4}=bioaccumulation factor for trophic level 4 fish, as derived using the BAF methodology in appendix B to part 132.

3. *Noncarcinogens.* The Tier I human noncancer criteria or Tier II values shall be calculated as follows:

$$HNV = \frac{ADE \times BW \times RSC}{WC + \left[\left(FC_{TL3} \times BAF^{HH}_{TL3}\right) + \left(FC_{TL4} \times BAF^{HH}_{TL4}\right)\right]}$$

Where:

HNV=Human noncancer value in milligrams per liter (mg/L).

ADE=Acceptable daily exposure in milligrams toxicant per kilogram body weight per day (mg/kg/day).

RSC=Relative source contribution factor of 0.8. An RSC derived from actual exposure data may be developed using the methodology outlined by the 1980 National Guidelines (see 45 FR 79354).

BW=weight of an average human (BW=70 kg).

WC_d=per capita water consumption (both drinking and incidental exposure) for surface waters classified as public water supplies=two liters/day.

or

WC_r=per capita incidental daily water ingestion for surface waters not used as human drinking water sources=0.01 liters/day.

FC_{TL3}=mean consumption of trophic level 3 fish by regional sport fishers of regionally caught freshwater fish=0.0036 kg/day.

FC_{TL4}=mean consumption of trophic level 4 fish by regional sport fishers of regionally caught freshwater fish=0.0114 kg/day.

BAF^{HH}_{TL3}=human health bioaccumulation factor for edible portion of trophic level 3 fish, as derived using the BAF methodology in appendix B to part 132.

BAF^{HH}_{TL4}=human health bioaccumulation factor for edible portion of trophic level 4 fish, as derived using the BAF methodology in appendix B to part 132.

IV. References

A. Howe, R.B., K.S. Crump and C. Van Landingham. 1986. Computer Program to Extrapolate Quantitative Animal Toxicity Data to Low Doses. Prepared for EPA under subcontract #2–251U–2745 to Research Triangle Institute.

B. U.S. Environmental Protection Agency. 1980. Water Quality Criteria Availability, Appendix C Guidelines and Methodology Used in the Preparation of Health Effects Assessment Chapters of the Consent Decree Water Quality Criteria Documents. Available from U.S. Environmental Protection Agency, Office of Water Resource Center (WH–550A), 401 M St., SW., Washington, DC 20460.

C. U.S. Environmental Protection Agency. 1986. Guidelines for Carcinogen Risk Assessment. Available from U.S. Environmental Protection Agency, Office of Water Resource Center (WH–550A), 401 M St., SW., Washington, DC 20460.

Appendix D to Part 132—Great Lakes Water Quality Initiative Methodology for the Development of Wildlife Criteria

Great Lakes States and Tribes shall adopt provisions consistent with (as protective as) this appendix.

I. Introduction

A. A Great Lakes Water Quality Wildlife Criterion (GLWC) is the concentration of a substance which is likely to, if not exceeded, protect avian and mammalian wildlife populations inhabiting the Great Lakes basin

from adverse effects resulting from the ingestion of water and aquatic prey taken from surface waters of the Great Lakes System. These criteria are based on existing toxicological studies of the substance of concern and quantitative information about the exposure of wildlife species to the substance (i.e., food and water consumption rates). Since toxicological and exposure data for individual wildlife species are limited, a GLWC is derived using a methodology similar to that used to derive noncancer human health criteria (Barnes and Dourson, 1988; NAS, 1977; NAS, 1980; U.S. EPA, 1980). Separate avian and mammalian values are developed using taxonomic class-specific toxicity data and exposure data for five representative Great Lakes basin wildlife species. The wildlife species selected are representative of avian and mammalian species resident in the Great Lakes basin which are likely to experience the highest exposures to bioaccumulative contaminants through the aquatic food web; they are the bald eagle, herring gull, belted kingfisher, mink, and river otter.

B. This appendix establishes a methodology which is required when developing Tier I wildlife criteria for bioaccumulative chemicals of concern (BCCs). The use of the equation provided in the methodology is encouraged, but not required, for the development of Tier I criteria or Tier II values for pollutants other than those identified in Table 6–A for which Tier I criteria or Tier II values are determined to be necessary for the protection of wildlife in the Great Lakes basin. A discussion of the methodology for deriving Tier II values can be found in the Great Lakes Water Quality Initiative Technical Support Document for Wildlife Criteria (Wildlife TSD).

C. In the event that this methodology is used to develop criteria for pollutants other than BCCs, or in the event that the Tier II methodology described in the Wildlife TSD is used to derive Tier II values, the methodology for deriving bioaccumulation factors under appendix B to part 132 must be used in either derivation. For chemicals which do not biomagnify to the extent of BCCs, it may be appropriate to select different representative species which are better examples of species with the highest exposures for the given chemical. The equation presented in this methodology, however, is still encouraged. In addition, procedure 1 of appendix F of this part describes the procedures for calculating site-specific wildlife criteria.

D. The term ''wildlife value'' (WV) is used to denote the value for each representative species which results from using the equation presented below, the value obtained from averaging species values within a class, or any value derived from application of the site-specific procedure provided in procedure 1 of appendix F of this part. The WVs calculated for the representative species are used to calculate taxonomic class-specific WVs. The WV is the concentration of a substance which, if not exceeded, should better protect the taxon in question.

E. ''Tier I wildlife criterion,'' or ''Tier I criterion'' is used to denote the number derived from data meeting the Tier I minimum database requirements, and which will be protective of the two classes of wildlife. It is synonymous with the term ''GLWC,'' and the two are used interchangeably.

II. Calculation of Wildlife Values for Tier I Criteria

Table 4 of Part 132 and Table D–1 of this appendix contain criteria calculated by EPA using the methodology provided below.

A. *Equation for Avian and Mammalian Wildlife Values.* Tier I wildlife values for the pollutants designated BCCs pursuant to part 132 are to be calculated using the equation presented below.

$$WV = \frac{\dfrac{TD}{UF_A \times UF_S \times UF_L} \times Wt}{W + \sum\left(F_{TLi} \times BAF_{TLi}^{WL}\right)}$$

Where:

WV=Wildlife Value in milligrams of substance per liter (mg/L).

TD=Test Dose (TD) in milligrams of substance per kilograms per day (mg/kg-d) for the test species. This shall be either a NOAEL or a LOAEL.

UF_A=Uncertainty Factor (UF) for extrapolating toxicity data across species (unitless). A species-specific UF shall be selected and applied to each representative species, consistent with the equation.

UF_S=UF for extrapolating from subchronic to chronic exposures (unitless).

UF_L=UF for LOAEL to NOAEL extrapolations (unitless).

Wt=Average weight in kilograms (kg) for the representative species.

W=Average daily volume of water consumed in liters per day (L/d) by the representative species.

F_{TLi}=Average daily amount of food consumed from trophic level i in kilograms per day (kg/d) by the representative species.

BAF^{WL}_{TLi}=Bioaccumulation factor (BAF) for wildlife food in trophic level i in liters per kilogram (L/kg), developed using the BAF methodology in appendix B to part 132, Methodology for Development of Bioaccumulation Factors. For consumption of piscivorous birds by other birds (e.g., herring gull by eagles), the BAF is derived by multiplying the trophic level 3 BAF for fish by a biomagnification factor to account for the biomagnification from fish to the consumed birds.

B. *Identification of Representative Species for Protection.* For bioaccumulative chemicals, piscivorous species are identified as the focus of concern for wildlife criteria development in the Great Lakes. An analysis of known or estimated exposure components for avian and mammalian wildlife species is presented in the Wildlife TSD. This analysis identifies three avian species (eagle, kingfisher and herring gull) and two mammalian species (mink and otter) as representative species for protection. The TD obtained from toxicity data for each taxonomic class is used to calculate WVs for each of the five representative species.

C. *Calculation of Avian and Mammalian Wildlife Values and GLWC Derivation.* The avian WV is the geometric mean of the WVs calculated for the three representative avian species. The mammalian WV is the geometric mean of the WVs calculated for the two representative mammalian species. The lower of the mammalian and avian WVs must be selected as the GLWC.

III. Parameters of the Effect Component of the Wildlife Criteria Methodology

A. *Definitions.* The following definitions provide additional specificity and guidance in the evaluation of toxicity data and the application of this methodology.

Acceptable endpoints. For the purpose of wildlife criteria derivation, acceptable subchronic and chronic endpoints are those which affect reproductive or developmental success, organismal viability or growth, or any other endpoint which is, or is directly related to, parameters that influence population dynamics.

Chronic effect. An adverse effect that is measured by assessing an acceptable endpoint, and results from continual exposure over several generations, or at least over a significant part of the test species' projected life span or life stage.

Lowest-observed-adverse-effect-level (LOAEL). The lowest tested dose or concentration of a substance which resulted in an observed adverse effect in exposed test organisms when all higher doses or concentrations resulted in the same or more severe effects.

No-observed-adverse-effect-level (NOAEL). The highest tested dose or concentration of a substance which resulted in no observed adverse effect in exposed test organisms where higher doses or concentrations resulted in an adverse effect.

Subchronic effect. An adverse effect, measured by assessing an acceptable endpoint, resulting from continual exposure for a period of time less than that deemed necessary for a chronic test.

B. *Minimum Toxicity Database for Tier I Criteria Development.* A TD value is required for criterion calculation. To derive a Tier I criterion for wildlife, the data set shall provide enough data to generate a subchronic or chronic dose-response curve for any given substance for both mammalian and avian species. In reviewing the toxicity data available which meet the minimum data requirements for each taxonomic class, the following order of preference shall be applied to select the appropriate TD to be used for calculation of individual WVs. Data from peer-reviewed field studies of wildlife species take precedence over other types of studies, where such studies are of adequate quality. An acceptable field study must be of subchronic or chronic duration, provide a defensible, chemical-specific dose-response curve in which cause and effect are clearly established, and assess acceptable endpoints as defined in this document. When acceptable wildlife field studies are not available, or determined to be of inadequate quality, the needed toxicity information may come from peer-reviewed laboratory studies. When laboratory studies are used, preference shall be given to laboratory studies with wildlife species over traditional laboratory animals to reduce uncertainties in making interspecies extrapolations. All available laboratory data and field studies shall be reviewed to corroborate the final GLWC, to assess the reasonableness of the toxicity value used, and to assess the appropriateness of any UFs which are applied. When evaluating the studies from which a test dose is derived in general, the following requirements must be met:

1. The mammalian data must come from at least one well-conducted study of 90 days or greater designed to observe subchronic or chronic effects as defined in this document.

2. The avian data must come from at least one well-conducted study of 70 days or greater designed to observe subchronic or chronic effects as defined in this document.

3. In reviewing the studies from which a TD is derived for use in calculating a WV, studies involving exposure routes other than oral may be considered only when an equivalent oral daily dose can be estimated and technically justified because the criteria calculations are based on an oral route of exposure.

4. In assessing the studies which meet the minimum data requirements, preference should be given to studies which assess effects on developmental or reproductive endpoints because, in general, these are more important endpoints in ensuring that a population's productivity is maintained. The Wildlife TSD provides additional discussion on the selection of an appropriate toxicity study.

C. *Selection of TD Data.* In selecting data to be used in the derivation of WVs, the evaluation of acceptable endpoints, as defined in Section III.A of this appendix, will be the primary selection criterion. All data not part of the selected subset may be used to assess the reasonableness of the toxicity value

and the appropriateness of the Ufs which are applied.

1. If more than one TD value is available within a taxonomic class, based on different endpoints of toxicity, that TD, which is likely to reflect best potential impacts to wildlife populations through resultant changes in mortality or fecundity rates, shall be used for the calculation of WVs.

2. If more than one TD is available within a taxonomic class, based on the same endpoint of toxicity, the TD from the most sensitive species shall be used.

3. If more than one TD based on the same endpoint of toxicity is available for a given species, the TD for that species shall be calculated using the geometric mean of those TDs.

D. *Exposure Assumptions in the Determination of the TD.* 1. In those cases in which a TD is available in units other than milligrams of substance per kilograms per day (mg/kg/d), the following procedures shall be used to convert the TD to the appropriate units prior to calculating a WV.

2. If the TD is given in milligrams of toxicant per liter of water consumed by the test animals (mg/L), the TD shall be multiplied by the daily average volume of water consumed by the test animals in liters per day (L/d) and divided by the average weight of the test animals in kilograms (kg).

3. If the TD is given in milligrams of toxicant per kilogram of food consumed by the test animals (mg/kg), the TD shall be multiplied by the average amount of food in kilograms consumed daily by the test animals (kg/d) and divided by the average weight of the test animals in kilograms (kg).

E. *Drinking and Feeding Rates.* 1. When drinking and feeding rates and body weight are needed to express the TD in milligrams of substance per kilograms per day (mg/kg/d), they are obtained from the study from which the TD was derived. If not already determined, body weight, and drinking and feeding rates are to be converted to a wet weight basis.

2. If the study does not provide the needed values, the values shall be determined from appropriate scientific literature. For studies done with domestic laboratory animals, either the Registry of Toxic Effects of Chemical Substances (National Institute for Occupational Safety and Health, the latest edition, Cincinnati, OH), or Recommendations for and Documentation of Biological Values for Use in Risk Assessment (U.S. EPA, 1988) should be consulted. When these references do not contain exposure information for the species used in a given study, either the allometric equations from Calder and Braun (1983) and Nagy (1987), which are presented below, or the exposure estimation methods presented in Chapter 4 of the Wildlife Exposure Factors Handbook (U.S. EPA, 1993), should be applied to approximate the needed feeding or drinking rates. Additional discussion and recommendations are provided in the Wildlife TSD. The choice of the methods described above is at the discretion of the State or Tribe.

3. For mammalian species, the general allometric equations are:

a. $F = 0.0687 \times (Wt)^{0.82}$

Where:

F = Feeding rate of mammalian species in kilograms per day (kg/d) dry weight.

Wt = Average weight in kilograms (kg) of the test animals.

b. $W = 0.099 \times (Wt)^{0.90}$

Where:

W = Drinking rate of mammalian species in liters per day (L/d).

Wt = Average weight in kilograms (kg) of the test animals.

4. For avian species, the general allometric equations are:

a. $F = 0.0582\ (Wt)^{0.65}$

Where:

F = Feeding rate of avian species in kilograms per day (kg/d) dry weight.

Wt = Average weight in kilograms (kg) of the test animals.

b. $W = 0.059 \times (Wt)^{0.67}$

Where:

W = Drinking rate of avian species in liters per day (L/d).

Wt = Average weight in kilograms (kg) of the test animals.

F. *LOAEL to NOAEL Extrapolations (UF_L).* In those cases in which a NOAEL is unavailable as the TD and a LOAEL is available, the LOAEL may be used to estimate the NOAEL. If used, the LOAEL shall be divided by an UF to estimate a NOAEL for use in deriving WVs. The value of the UF shall not be less than one and should not exceed 10, depending on the dose-response curve and any other available data, and is represented by UF_L in the equation expressed in Section II.A of this appendix. Guidance for selecting an appropriate UF_L, based on a review of available wildlife toxicity data, is available in the Wildlife TSD.

G. *Subchronic to Chronic Extrapolations (US_S).* In instances where only subchronic data are available, the TD may be derived from subchronic data. In such cases, the TD shall be divided by an UF to extrapolate from subchronic to chronic levels. The value of the UF shall not be less than one and should not exceed 10, and is represented by UF_S in the equation expressed in Section II.A of this appendix. This factor is to be used when assessing highly bioaccumulative substances where toxicokinetic considerations suggest that a bioassay of limited length underestimates chronic effects. Guidance for

selecting an appropriate UF_S, based on a review of available wildlife toxicity data, is available in the Wildlife TSD.

H. *Interspecies Extrapolations (UF_A).* 1. The selection of the UF_A shall be based on the available toxicological data and on available data concerning the physicochemical, toxicokinetic, and toxicodynamic properties of the substance in question and the amount and quality of available data. This value is an UF that is intended to account for differences in toxicological sensitivity among species. Guidance for selecting an appropriate UF_A, based on a review of available wildlife toxicity data, is available in the Wildlife TSD. Additional discussion of an interspecies UF located in appendix A to the Great Lakes Water Quality Initiative Technical Support Document for Human Health Criteria may be useful in determining the appropriate value for UF_A.

2. For the derivation of Tier I criteria, a UF_A shall not be less than one and should not exceed 100, and shall be applied to each of the five representative species, based on existing data and best professional judgment. The value of UF_A may differ for each of the representative species.

3. For Tier I wildlife criteria, the UF_A shall be used only for extrapolating toxicity data across species within a taxonomic class, except as provided below. The Tier I UF_A is not intended for interclass extrapolations because of the poorly defined comparative toxicokinetic and toxicodynamic parameters between mammals and birds. However, an interclass extrapolation employing a UF_A may be used for a given chemical if it can be supported by a validated biologically-based dose-response model or by an analysis of interclass toxicological data, considering acceptable endpoints, for a chemical analog that acts under the same mode of toxic action.

IV. Parameters of the Exposure Component of the Wildlife Criteria Methodology

A. *Drinking and Feeding Rates of Representative Species.* The body weights (Wt), feeding rates (F_{Tli}), drinking rates (W), and trophic level dietary composition (as food ingestion rate and percent in diet) for each of the five representative species are presented in Table D–2 of this appendix. Guidance on incorporating the non-aquatic portion of the bald eagle and mink diets in the criteria calculations is available in the Wildlife TSD.

B. *BAFs.* The Methodology for Development of Bioaccumulation Factors is presented in appendix B to part 132. Trophic level 3 and 4 BAFs are used to derive Wvs because these are the trophic levels at which the representative species feed.

V. References

A. Barnes, D.G. and M. Dourson. 1988. Reference Dose (RfD): Description and Use in Health Risk Assessments. Regul. Toxicol. Pharmacol. 8:471–486.

B. Calder III, W.A. and E.J. Braun. 1983. Scaling of Osmotic Regulation in Mammals and Birds. American Journal of Physiology. 244:601–606.

C. Nagy, K.A. 1987. Field Metabolic Rate and Food Requirement Scaling in Mammals and Birds. Ecological Monographs. 57(2):111–128.

D. National Academy of Sciences. 1977. Chemical Contaminants: Safety and Risk Assessment, *in* Drinking Water and Health, Volume 1. National Academy Press.

E. National Academy of Sciences. 1980. Problems of Risk Estimation, *in* Drinking Water and Health, Volume 3. National Academy Press.

F. National Institute for Occupational Safety and Health. Latest edition. Registry of Toxic Effects of Chemical Substances. Division of Standards Development and Technology Transfer. (Available only on microfiche or as an electronic database.)

G. U.S. EPA. 1980. Appendix C. Guidelines and Methodology Used in the Preparation of Health Effect Assessment Chapters of the Consent Decree Water Criteria Documents, pp. 79347–79357 *in* Water Quality Criteria Documents; Availability. Available from U.S. Environmental Protection Agency, Office of Water Resource Center (WH–550A), 401 M St. SW, Washington, DC 20460.

H. U.S. EPA. 1988. Recommendations for, and documentation of, biological values for use in risk assessment. NTIS–PB88–179874.

I. U.S. EPA. 1993. Wildlife Exposure Factors Handbook, Volumes I and II. EPA/600/R–93/187a and b.

Tables to Appendix D to Part 132

TABLE D–1.—TIER I GREAT LAKES WILDLIFE CRITERIA

Substance	Criterion (µg/L)
DDT & Metabolites	1.1E–5
Mercury	1.3E–3
PCBs (total)	7.4E–5
2,3,7,8-TCDD	3.1E–9

TABLE D–2.—EXPOSURE PARAMETERS FOR THE FIVE REPRESENTATIVE SPECIES IDENTIFIED FOR PROTECTION

Species (units)	Adult body weight (kg)	Water ingestion rate (L/day)	Food ingestion rate of prey in each trophic level (kg/day)	Trophic level of prey (percent of diet)
Mink	0.80	0.081	TL3: 0.159; Other: 0.0177	TL3: 90; Other: 10.
Otter	7.4	0.600	TL3: 0.977; TL4: 0.244	TL3: 80; TL4: 20.
Kingfisher	0.15	0.017	TL3: 0.0672	TL3: 100.
Herring gull	1.1	0.063	TL3: 0.192; TL4: 0.0480	Fish: 90—TL3: 80; TL4: 20.
			Other: 0.0267	Other: 10.
Bald eagle	4.6	0.160	TL3: 0.371; TL4: 0.0929	Fish: 92—TL3: 80; TL4: 20.
			PB: 00283; Other: 0.0121	Birds: 8—PB: 70; non-aquatic: 30.

NOTE: TL3=trophic level three fish; TL4=trophic level four fish; PB=piscivorous birds; Other=non-aquatic birds and mammals.

APPENDIX E TO PART 132—GREAT LAKES WATER QUALITY INITIATIVE ANTIDEGRADATION POLICY

Great Lakes States and Tribes shall adopt provisions consistent with (as protective as) appendix E to part 132.

The State or Tribe shall adopt an antidegradation standard applicable to all waters of the Great Lakes System and identify the methods for implementing such a standard. Consistent with 40 CFR 131.12, an acceptable antidegradation standard and implementation procedure are required elements of a State's or Tribe's water quality standards program. Consistent with 40 CFR 131.6, a complete water quality standards submission needs to include both an antidegradation standard and antidegradation implementation procedures. At a minimum, States and Tribes shall adopt provisions in their antidegradation standard and implementation methods consistent with sections I, II, III and IV of this appendix, applicable to pollutants identified as bioaccumulative chemicals of concern (BCCs).

I. ANTIDEGRADATION STANDARD

This antidegradation standard shall be applicable to any action or activity by any source, point or nonpoint, of pollutants that is anticipated to result in an increased loading of BCCs to surface waters of the Great Lakes System and for which independent regulatory authority exists requiring compliance with water quality standards. Pursuant to this standard:

A. Existing instream water uses, as defined pursuant to 40 CFR 131, and the level of water quality necessary to protect existing uses shall be maintained and protected. Where designated uses of the waterbody are impaired, there shall be no lowering of the water quality with respect to the pollutant or pollutants which are causing the impairment;

B. Where, for any parameter, the quality of the waters exceed levels necessary to support the propagation of fish, shellfish, and wildlife and recreation in and on the waters, that water shall be considered high quality for that parameter consistent with the definition of high quality water found at section II.A of this appendix and that quality shall be maintained and protected unless the State or Tribe finds, after full satisfaction of intergovernmental coordination and public participation provisions of the State's or Tribe's continuing planning process, that allowing lower water quality is necessary to accommodate important economic or social development in the area in which the waters are located. In allowing such degradation, the State or Tribe shall assure water quality adequate to protect existing uses fully. Further, the State or Tribe shall assure that there shall be achieved the highest statutory and regulatory requirements for all new and existing point sources and all cost-effective and reasonable best management practices for nonpoint source control. The State or Tribe shall utilize the Antidegradation Implementation Procedures adopted pursuant to the requirements of this regulation in determining if any lowering of water quality will be allowed;

C. Where high quality waters constitute an outstanding national resource, such as waters of national and State parks and wildlife refuges and waters of exceptional recreational or ecological significance, that water quality shall be maintained and protected; and

D. In those cases where the potential lowering of water quality is associated with a thermal discharge, the decision to allow such degradation shall be consistent with section 316 of the Clean Water Act (CWA).

II. ANTIDEGRADATION IMPLEMENTATION PROCEDURES

A. *Definitions.*

Control Document. Any authorization issued by a State, Tribal or Federal agency to any source of pollutants to waters under its jurisdiction that specifies conditions under which the source is allowed to operate.

High quality waters. High quality waters are water bodies in which, on a parameter by parameter basis, the quality of the waters exceeds levels necessary to support propagation of fish, shellfish, and wildlife and recreation in and on the water.

Lake Superior Basin—Outstanding International Resource Waters. Those waters designated as such by a Tribe or State consistent with the September 1991 Bi-National Program to Restore and Protect the Lake Superior Basin. The purpose of such designations shall be to ensure that any new or increased discharges of Lake Superior bioaccumulative substances of immediate concern are subject to best technology in process and treatment requirements.

Lake Superior Basin—Outstanding National Resource Waters. Those waters designated as such by a Tribe or State consistent with the September 1991 Bi-National Program to Restore and Protect the Lake Superior Basin. The purpose of such designations shall be to prohibit new or increased discharges of Lake Superior bioaccumulative substances of immediate concern from point sources in these areas.

Lake Superior bioaccumulative substances of immediate concern. A list of substances identified in the September 1991 Bi-National Program to Restore and Protect the Lake Superior Basin. They include: 2, 3, 7, 8-TCDD; octachlorostyrene; hexachlorobenzene; chlordane; DDT, DDE, and other metabolites; toxaphene; PCBs; and mercury. Other chemicals may be added to the list following States' or Tribes' assessments of environmental effects and impacts and after public review and comment.

Outstanding National Resource Waters. Those waters designated as such by a Tribe or State. The State or Tribal designation shall describe the quality of such waters to serve as the benchmark of the water quality that shall be maintained and protected. Waters that may be considered for designation as Outstanding National Resource Waters include, but are not limited to, water bodies that are recognized as:

Important because of protection through official action, such as Federal or State law, Presidential or secretarial action, international treaty, or interstate compact;

Having exceptional recreational significance;

Having exceptional ecological significance;

Having other special environmental, recreational, or ecological attributes; or waters whose designation as Outstanding National Resource Waters is reasonably necessary for the protection of other waters so designated.

Significant Lowering of Water Quality. A significant lowering of water quality occurs when there is a new or increased loading of any BCC from any regulated existing or new facility, either point source or nonpoint source for which there is a control document or reviewable action, as a result of any activity including, but not limited to:

(1) Construction of a new regulated facility or modification of an existing regulated facility such that a new or modified control document is required;

(2) Modification of an existing regulated facility operating under a current control document such that the production capacity of the facility is increased;

(3) Addition of a new source of untreated or pretreated effluent containing or expected to contain any BCC to an existing wastewater treatment works, whether public or private;

(4) A request for an increased limit in an applicable control document;

(5) Other deliberate activities that, based on the information available, could be reasonably expected to result in an increased loading of any BCC to any waters of the Great Lakes System.

b. Notwithstanding the above, changes in loadings of any BCC within the existing capacity and processes, and that are covered by the existing applicable control document, are not subject to an antidegradation review. These changes include, but are not limited to:

(1) Normal operational variability;

(2) Changes in intake water pollutants;

(3) Increasing the production hours of the facility, (e.g., adding a second shift); or

(4) Increasing the rate of production.

C. Also, excluded from an antidegradation review are new effluent limits based on improved monitoring data or new water quality criteria or values that are not a result of changes in pollutant loading.

B. For all waters, the Director shall ensure that the level of water quality necessary to protect existing uses is maintained. In order to achieve this requirement, and consistent with 40 CFR 131.10, water quality standards use designations must include all existing uses. Controls shall be established as necessary on point and nonpoint sources of pollutants to ensure that the criteria applicable to the designated use are achieved in the water and that any designated use of a downstream water is protected. Where water quality does not support the designated uses of a waterbody or ambient pollutant concentrations exceed water quality criteria applicable to that waterbody, the Director shall not allow a lowering of water quality for the pollutant or pollutants preventing the attainment of such uses or exceeding such criteria.

C. For Outstanding National Resource Waters:

1. The Director shall ensure, through the application of appropriate controls on pollutant sources, that water quality is maintained and protected.

2. Exception. A short-term, temporary (i.e., weeks or months) lowering of water quality may be permitted by the Director.

D. For high quality waters, the Director shall ensure that no action resulting in a lowering of water quality occurs unless an antidegradation demonstration has been completed pursuant to section III of this appendix and the information thus provided is determined by the Director pursuant to section IV of this appendix to adequately support the lowering of water quality.

1. The Director shall establish conditions in the control document applicable to the regulated facility that prohibit the regulated facility from undertaking any deliberate action, such that there would be an increase in the rate of mass loading of any BCC, unless an antidegradation demonstration is provided to the Director and approved pursuant to section IV of this appendix prior to commencement of the action. Imposition of limits due to improved monitoring data or new water quality criteria or values, or changes in loadings of any BCC within the existing capacity and processes, and that are covered by the existing applicable control document, are not subject to an antidegradation review.

2. For BCCs known or believed to be present in a discharge, from a point or nonpoint source, a monitoring requirement shall be included in the control document. The control document shall also include a provision requiring the source to notify the Director or any increased loadings. Upon notification, the Director shall require actions as necessary to reduce or eliminate the increased loading.

3. Fact Sheets prepared pursuant to 40 CFR 124.8 and 124.56 shall reflect any conditions developed under sections II.D.1 or II.D.2 of this appendix and included in a permit.

E. *Special Provisions for Lake Superior.* The following conditions apply in addition to those specified in section II.B through II.C of this appendix for waters of Lake Superior so designated.

1. A State or Tribe may designate certain specified areas of the Lake Superior Basin as Lake Superior Basin—Outstanding National Resource Waters for the purpose of prohibiting the new or increased discharge of Lake Superior bioaccumulative substances of immediate concern from point sources in these areas.

2. States and Tribes may designate all waters of the Lake Superior Basin as Outstanding International Resource Waters for the purpose of restricting the increased discharge of Lake Superior bioaccumulative substances of immediate concern from point sources consistent with the requirements of sections III.C and IV.B of this appendix.

F. *Exemptions.* Except as the Director may determine on a case-by-case basis that the application of these procedures is required to adequately protect water quality, or as the affected waterbody is an Outstanding National Resource Water as defined in section II.A of this appendix, the procedures in this part do not apply to:

1. Short-term, temporary (i.e., weeks or months) lowering of water quality;

2. Bypasses that are not prohibited at 40 CFR 122.41(m); and

3. Response actions pursuant to the Comprehensive Environmental Response, Compensation and Liability Act (CERCLA), as amended, or similar Federal, State or Tribal authorities, undertaken to alleviate a release into the environment of hazardous substances, pollutants or contaminants which may pose an imminent and substantial danger to public health or welfare.

III. Antidegradation Demonstration

Any entity seeking to lower water quality in a high quality water or create a new or increased discharge of Lake Superior bioaccumulative substances of immediate concern in a Lake Superior Outstanding International Resource Water must first, as required by sections II.D or II.E.2 of this appendix, submit an antidegradation demonstration for consideration by the Director. States and Tribes should tailor the level of detail and documentation in antidegradation reviews, to the specific circumstances encountered. The antidegradation demonstration shall include the following:

A. *Pollution Prevention Alternatives Analysis.* Identify any cost-effective pollution prevention alternatives and techniques that are available to the entity, that would eliminate or significantly reduce the extent to which the increased loading results in a lowering of water quality.

B. *Alternative or Enhanced Treatment Analysis.* Identify alternative or enhanced treatment techniques that are available to the entity that would eliminate the lowering of water quality and their costs relative to the cost of treatment necessary to achieve applicable effluent limitations.

C. *Lake Superior.* If the States or Tribes designate the waters of Lake Superior as Outstanding International Resource Waters pursuant to section II.E.2 of this appendix, then any entity proposing a new or increased discharge of any Lake Superior bioaccumulative substance of immediate concern to the Lake Superior Basin shall identify the best technology in process and treatment to eliminate or reduce the extent of the lowering of water quality. In this case, the requirements in section III.B of this appendix do not apply.

D. *Important Social or Economic Development Analysis.* Identify the social or economic development and the benefits to the area in which the waters are located that will be foregone if the lowering of water quality is not allowed.

E. *Special Provision for Remedial Actions.* Entities proposing remedial actions pursuant

to the CERCLA, as amended, corrective actions pursuant to the Resource Conservation and Recovery Act, as amended, or similar actions pursuant to other Federal or State environmental statutes may submit information to the Director that demonstrates that the action utilizes the most cost effective pollution prevention and treatment techniques available, and minimizes the necessary lowering of water quality, in lieu of the information required by sections III.B through III.D of this appendix.

IV. ANTIDEGRADATION DECISION

A. Once the Director determines that the information provided by the entity proposing to increase loadings is administratively complete, the Director shall use that information to determine whether or not the lowering of water quality is necessary, and, if it is necessary, whether or not the lowering of water quality will support important social and economic development in the area. If the proposed lowering of water quality is either not necessary, or will not support important social and economic development, the Director shall deny the request to lower water quality. If the lowering of water quality is necessary, and will support important social and economic development, the Director may allow all or part of the proposed lowering to occur as necessary to accommodate the important social and economic development. In no event may the decision reached under this section allow water quality to be lowered below the minimum level required to fully support existing and designated uses. The decision of the Director shall be subject to the public participation requirements of 40 CFR 25.

B. If States designate the waters of Lake Superior as Outstanding International Resource Waters pursuant to section II.E.2 of this appendix, any entity requesting to lower water quality in the Lake Superior Basin as a result of the new or increased discharge of any Lake Superior bioaccumulative substance of immediate concern shall be required to install and utilize the best technology in process and treatment as identified by the Director.

APPENDIX F TO PART 132—GREAT LAKES WATER QUALITY INITIATIVE IMPLEMENTATION PROCEDURES

PROCEDURE 1: SITE-SPECIFIC MODIFICATIONS TO CRITERIA AND VALUES

Great Lakes States and Tribes shall adopt provisions consistent with (as protective as) this procedure.

A. Requirements for Site-specific Modifications to Criteria and Values. Criteria and values may be modified on a site-specific basis to reflect local environmental conditions as restricted by the following provisions. Any such modifications must be protective of designated uses and aquatic life, wildlife or human health and be submitted to EPA for approval. In addition, any site-specific modifications that result in less stringent criteria must be based on a sound scientific rationale and shall not be likely to jeopardize the continued existence of endangered or threatened species listed or proposed under section 4 of the Endangered Species Act (ESA) or result in the destruction or adverse modification of such species' critical habitat. More stringent modifications shall be developed to protect endangered or threatened species listed or proposed under section 4 of the ESA, where such modifications are necessary to ensure that water quality is not likely to jeopardize the continued existence of such species or result in the destruction or adverse modification of such species' critical habitat. More stringent modifications may also be developed to protect candidate (C1) species being considered by the U.S. Fish and Wildlife Service (FWS) for listing under section 4 of the ESA, where such modifications are necessary to protect such species.

1. *Aquatic Life.*

a. Aquatic life criteria or values may be modified on a site-specific basis to provide an additional level of protection, pursuant to authority reserved to the States and Tribes under Clean Water Act (CWA) section 510.

Guidance on developing site-specific criteria in these instances is provided in Chapter 3 of the U.S. EPA Water Quality Standards Handbook, Second Edition—Revised (1994).

b. Less stringent site-specific modifications to chronic or acute aquatic life criteria or values may be developed when:

i. The local water quality characteristics such as Ph, hardness, temperature, color, etc., alter the biological availability or toxicity of a pollutant; or

ii. The sensitivity of the aquatic organisms species that ''occur at the site'' differs from the species actually tested in developing the criteria. The phrase ''occur at the site'' includes the species, genera, families, orders, classes, and phyla that: are usually present at the site; are present at the site only seasonally due to migration; are present intermittently because they periodically return to or extend their ranges into the site; were present at the site in the past, are not currently present at the site due to degraded conditions, and are expected to return to the site when conditions improve; are present in nearby bodies of water, are not currently present at the site due to degraded conditions, and are expected to be present at the site when conditions improve. The taxa that ''occur at the site'' cannot be determined merely by sampling downstream and/or upstream of the site at one point in time. ''Occur at the site'' does not include taxa that were once present at the site but cannot

exist at the site now due to permanent physical alteration of the habitat at the site resulting, for example, from dams, etc.

c. Less stringent modifications also may be developed to acute and chronic aquatic life criteria or values to reflect local physical and hydrological conditions.

Guidance on developing site-specific criteria is provided in Chapter 3 of the U.S. EPA Water Quality Standards Handbook, Second Edition—Revised (1994).

d. Any modifications to protect threatened or endangered aquatic species required by procedure 1.A of this appendix may be accomplished using either of the two following procedures:

i. If the Species Mean Acute Value (SMAV) for a listed or proposed species, or for a surrogate of such species, is lower than the calculated Final Acute Value (FAV), such lower SMAV may be used instead of the calculated FAV in developing site-specific modified criteria; or,

ii. The site-specific criteria may be calculated using the recalculation procedure for site-specific modifications described in Chapter 3 of the U.S. EPA Water Quality Standards Handbook, Second Edition—Revised (1994).

2. *Wildlife.*

a. Wildlife water quality criteria may be modified on a site-specific basis to provide an additional level of protection, pursuant to authority reserved to the States and Tribes under CWA section 510.

b. Less stringent site-specific modifications to wildlife water quality criteria may be developed when a site-specific bioaccumulation factor (BAF) is derived which is lower than the system-wide BAF derived under appendix B of this part. The modification must consider both the mobility of prey organisms and wildlife populations in defining the site for which criteria are developed. In addition, there must be a showing that:

i. Any increased uptake of the toxicant by prey species utilizing the site will not cause adverse effects in wildlife populations; and

ii. Wildlife populations utilizing the site or downstream waters will continue to be fully protected.

c. Any modification to protect endangered or threatened wildlife species required by procedure 1.A of this appendix must consider both the mobility of prey organisms and wildlife populations in defining the site for which criteria are developed, and may be accomplished by using the following recommended method.

i. The methodology presented in appendix D to part 132 is used, substituting appropriate species-specific toxicological, epidemiological, or exposure information, including changes to the BAF;

ii. An interspecies uncertainty factor of 1 should be used where epidemiological data are available for the species in question. If necessary, species-specific exposure parameters can be derived as presented in Appendix D of this part;

iii. An intraspecies uncertainty factor (to account for protection of individuals within a wildlife population) should be applied in the denominator of the effect part of the wildlife equation in appendix D of this part in a manner consistent with the other uncertainty factors described in appendix D of this part; and

iv. The resulting wildlife value for the species in question should be compared to the two class-specific wildlife values which were previously calculated, and the lowest of the three shall be selected as the site-specific modification.

NOTE: Further discussion on the use of this methodology may be found in the Great Lakes Water Quality Initiative Technical Support Document for Wildlife Criteria.

3. *BAFs.*

a. BAFs may be modified on a site-specific basis to larger values, pursuant to the authority reserved to the States and Tribes under CWA section 510, where reliable data show that local bioaccumulation is greater than the system-wide value.

b. BAFs may be modified on a site-specific basis to lower values, where scientifically defensible, if:

i. The fraction of the total chemical that is freely dissolved in the ambient water is different than that used to derive the system-wide BAFs (i.e., the concentrations of particulate organic carbon and the dissolved organic carbon are different than those used to derive the system-wide BAFs);

ii. Input parameters of the Gobas model, such as the structure of the aquatic food web and the disequilibrium constant, are different at the site than those used to derive the system-wide BAFs;

iii. The percent lipid of aquatic organisms that are consumed and occur at the site is different than that used to derive the system-wide BAFs; or

iv. Site-specific field-measured BAFs or biota-sediment accumulation factor (BSAFs) are determined.

If site-specific BAFs are derived, they shall be derived using the methodology in appendix B of this part.

c. Any more stringent modifications to protect threatened or endangered species required by procedure 1.A of this appendix shall be derived using procedures set forth in the methodology in appendix B of this part.

4. *Human Health.*

a. Human health criteria or values may be modified on a site-specific basis to provide an additional level of protection, pursuant to authority reserved to the States and Tribes under CWA section 510. Human health criteria or values shall be modified on a site-

specific basis to provide additional protection appropriate for highly exposed subpopulations.

b. Less stringent site-specific modifications to human health criteria or values may be developed when:

i. local fish consumption rates are lower than the rate used in deriving human health criteria or values under appendix C of this part; and/or

ii. a site-specific BAF is derived which is lower than that used in deriving human health criteria or values under appendix C of this part.

B. *Notification Requirements.* When a State proposes a site-specific modification to a criterion or value as allowed in section 4.A above, the State should notify the other Great Lakes States of such a proposal and, for less stringent criteria, supply appropriate justification.

C. *References.*

U.S. EPA. 1984. Water Quality Standards Handbook—Revised. Chapter 3 and Appendices. U.S. Environmental Protection Agency, Office of Water Resource Center (RC–4100), 401 M Street, SW., Washington, DC 20960.

PROCEDURE 2: VARIANCES FROM WATER QUALITY STANDARDS FOR POINT SOURCES

The Great Lakes States or Tribes may adopt water quality standards (WQS) variance procedures and may grant WQS variances for point sources pursuant to such procedures. Variance procedures shall be consistent with (as protective as) the provisions in this procedure.

A. *Applicability.* A State or Tribe may grant a variance to a WQS which is the basis of a water quality-based effluent limitation included in a National Pollutant Discharge Elimination System (NPDES) permit. A WQS variance applies only to the permittee requesting the variance and only to the pollutant or pollutants specified in the variance. A variance does not affect, or require the State or Tribe to modify, the corresponding water quality standard for the waterbody as a whole.

1. This provision shall not apply to new Great Lakes dischargers or recommencing dischargers.

2. A variance to a water quality standard shall not be granted that would likely jeopardize the continued existence of any endangered or threatened species listed under Section 4 of the Endangered Species Act (ESA) or result in the destruction or adverse modification of such species' critical habitat.

3. A WQS variance shall not be granted if standards will be attained by implementing effluent limits required under sections 301(b) and 306 of the Clean Water Act (CWA) and by the permittee implementing cost-effective and reasonable best management practices for nonpoint source control.

B. *Maximum Timeframe for Variances.* A WQS variance shall not exceed five years or the term of the NPDES permit, whichever is less. A State or Tribe shall review, and modify as necessary, WQS variances as part of each water quality standards review pursuant to section 303(c) of the CWA.

C. *Conditions to Grant a Variance.* A variance may be granted if:

1. The permittee demonstrates to the State or Tribe that attaining the WQS is not feasible because:

a. Naturally occurring pollutant concentrations prevent the attainment of the WQS;

b. Natural, ephemeral, intermittent or low flow conditions or water levels prevent the attainment of the WQS, unless these conditions may be compensated for by the discharge of sufficient volume of effluent to enable WQS to be met without violating State or Tribal water conservation requirements;

c. Human-caused conditions or sources of pollution prevent the attainment of the WQS and cannot be remedied, or would cause more environmental damage to correct than to leave in place;

d. Dams, diversions or other types of hydrologic modifications preclude the attainment of the WQS, and it is not feasible to restore the waterbody to its original condition or to operate such modification in a way that would result in the attainment of the WQS;

e. Physical conditions related to the natural features of the waterbody, such as the lack of a proper substrate cover, flow, depth, pools, riffles, and the like, unrelated to chemical water quality, preclude attainment of WQS; or

f. Controls more stringent than those required by sections 301(b) and 306 of the CWA would result in substantial and widespread economic and social impact.

2. In addition to the requirements of C.1, above, the permittee shall also:

a. Show that the variance requested conforms to the requirements of the State's or Tribe's antidegradation procedures; and

b. Characterize the extent of any increased risk to human health and the environment associated with granting the variance compared with compliance with WQS absent the variance, such that the State or Tribe is able to conclude that any such increased risk is consistent with the protection of the public health, safety and welfare.

D. *Submittal of Variance Application.* The permittee shall submit an application for a variance to the regulatory authority issuing the permit. The application shall include:

1. All relevant information demonstrating that attaining the WQS is not feasible based on one or more of the conditions in section C.1 of this procedure; and,

2. All relevant information demonstrating compliance with the conditions in section C.2 of this procedure.

E. *Public Notice of Preliminary Decision.* Upon receipt of a complete application for a variance, and upon making a preliminary decision regarding the variance, the State or Tribe shall public notice the request and preliminary decision for public comment pursuant to the regulatory authority's Administrative Procedures Act and shall notify the other Great Lakes States and Tribes of the preliminary decision. This public notice requirement may be satisfied by including the supporting information for the variance and the preliminary decision in the public notice of a draft NPDES permit.

F. *Final Decision on Variance Request.* The State or Tribe shall issue a final decision on the variance request within 90 days of the expiration of the public comment period required in section E of this procedure. If all or part of the variance is approved by the State or Tribe, the decision shall include all permit conditions needed to implement those parts of the variance so approved. Such permit conditions shall, at a minimum, require:

1. Compliance with an initial effluent limitation which, at the time the variance is granted, represents the level currently achievable by the permittee, and which is no less stringent than that achieved under the previous permit;

2. That reasonable progress be made toward attaining the water quality standards for the waterbody as a whole through appropriate conditions;

3. When the duration of a variance is shorter than the duration of a permit, compliance with an effluent limitation sufficient to meet the underlying water quality standard, upon the expiration of said variance; and

4. A provision that allows the permitting authority to reopen and modify the permit based on any State or Tribal triennial water quality standards revisions to the variance.

The State shall deny a variance request if the permittee fails to make the demonstrations required under section C of this procedure.

G. *Incorporating Variance into Permit.* The State or Tribe shall establish and incorporate into the permittee's NPDES permit all conditions needed to implement the variance as determined in section F of this procedure.

H. *Renewal of Variance.* A variance may be renewed, subject to the requirements of sections A through G of this procedure. As part of any renewal application, the permittee shall again demonstrate that attaining WQS is not feasible based on the requirements of section C of this procedure. The permittee's application shall also contain information concerning its compliance with the conditions incorporated into its permit as part of the original variance pursuant to sections F and G of this procedure. Renewal of a variance may be denied if the permittee did not comply with the conditions of the original variance.

I. *EPA Approval.* All variances and supporting information shall be submitted by the State or Tribe to the appropriate EPA regional office and shall include:

1. Relevant permittee applications pursuant to section D of this procedure;

2. Public comments and records of any public hearings pursuant to section E of this procedure;

3. The final decision pursuant to section F of this procedure; and,

4. NPDES permits issued pursuant to section G of this procedure.

5. Items required by sections I.1 through I.3. of this procedure shall be submitted by the State within 30 days of the date of the final variance decision. The item required by section I.4 of this procedure shall be submitted in accordance with the State or Tribe Memorandum of Agreement with the Regional Administrator pursuant to 40 CFR 123.24.

6. EPA shall review the State or Tribe submittal for compliance with the CWA pursuant to 40 CFR 123.44, and 40 CFR 131.21.

J. *State WQS Revisions.* All variances shall be appended to the State or Tribe WQS rules.

PROCEDURE 3: TOTAL MAXIMUM DAILY LOADS, WASTELOAD ALLOCATIONS FOR POINT SOURCES, LOAD ALLOCATIONS FOR NONPOINT SOURCES, WASTELOAD ALLOCATIONS IN THE ABSENCE OF A TMDL, AND PRELIMINARY WASTELOAD ALLOCATIONS FOR PURPOSES OF DETERMINING THE NEED FOR WATER QUALITY BASED EFFLUENT LIMITS

The Great Lakes States and Tribes shall adopt provisions consistent with (as protective as) this procedure 3 for the purpose of developing Total Maximum Daily Loads (TMDLs), Wasteload Allocations (WLAs) in the Absence of TMDLs, and Preliminary Wasteload Allocations for Purposes of Determining the Need for Water Quality Based Effluent Limits (WQBELs), except as specifically provided.

A. Where a State or Tribe develops an assessment and remediation plan that the State or Tribe certifies meets the requirements of sections B through F of this procedure and public participation requirements applicable to TMDLs, and that has been approved by EPA as meeting those requirements under 40 CFR 130.6, the assessment and remediation plan may be used in lieu of a TMDL for purposes of appendix F to part 132. Assessment and remediation plans under this procedure may include, but are not limited to, Lakewide Management Plans, Remedial Action Plans, and State Water Quality Management Plans. Also, any part of an assessment and remediation plan that also satisfies one or more requirements under Clean

Water Act (CWA) section 303(d) or implementing regulations may be incorporated by reference into a TMDL as appropriate. Assessment and remediation plans under this section should be tailored to the level of detail and magnitude for the watershed and pollutant being assessed.

B. *General Conditions of Application.* Except as provided in §132.4, the following are conditions applicable to establishing TMDLs for all pollutants and pollutant parameters in the Great Lakes System, with the exception of whole effluent toxicity, unless otherwise provided in procedure 6 of appendix F. Where specified, these conditions also apply to wasteload allocations (WLAs) calculated in the absence of TMDLs and to preliminary WLAs for purposes of determining the needs for WQBELs under procedure 5 of appendix F.

1. *TMDLs Required.* TMDLs shall, at a minimum, be established in accordance with the listing and priority setting process established in section 303(d) of the CWA and at 40 CFR 130.7. Where water quality standards cannot be attained immediately, TMDLs must reflect reasonable assurances that water quality standards will be attained in a reasonable period of time. Some TMDLs may be based on attaining water quality standards over a period of time, with specific controls on individual sources being implemented in stages. Determining the reasonable period of time in which water quality standards will be met is a case-specific determination considering a number of factors including, but not limited to: receiving water characteristics; persistence, behavior and ubiquity of pollutants of concern; type of remediation activities necessary; available regulatory and non-regulatory controls; and individual State or Tribal requirements for attainment of water quality standards.

2. *Attainment of Water Quality Standards.* A TMDL must ensure attainment of applicable water quality standards, including all numeric and narrative criteria, Tier I criteria, and Tier II values for each pollutant or pollutants for which a TMDL is established.

3. *TMDL Allocations.*

a. TMDLs shall include WLAs for point sources and load allocations (LAs) for nonpoint sources, including natural background, such that the sum of these allocations is not greater than the loading capacity of the water for the pollutant(s) addressed by the TMDL, minus the sum of a specified margin of safety (MOS) and any capacity reserved for future growth.

b. Nonpoint source LAs shall be based on:

i. Existing pollutant loadings if changes in loadings are not reasonably anticipated to occur;

ii. Increases in pollutant loadings that are reasonably anticipated to occur;

iii. Anticipated decreases in pollutant loadings if such decreased loadings are technically feasible and are reasonably anticipated to occur within a reasonable time period as a result of implementation of best management practices or other load reduction measures. In determining whether anticipated decreases in pollutant loadings are technically feasible and can reasonably be expected to occur within a reasonable period of time, technical and institutional factors shall be considered. These decisions are case-specific and should reflect the particular TMDL under consideration.

c. WLAs. The portion of the loading capacity not assigned to nonpoint sources including background, or to an MOS, or reserved for future growth is allocated to point sources. Upon reissuance, NPDES permits for these point sources must include effluent limitations consistent with WLAs in EPA-approved or EPA-established TMDLs.

d. Monitoring. For LAs established on the basis of subsection b.iii above, monitoring data shall be collected and analyzed in order to validate the TMDL's assumptions, to varify anticipated load reductions, to evaluate the effectiveness of controls being used to implement the TMDL, and to revise the WLAs and LAs as necessary to ensure that water quality standards will be achieved within the time-period established in the TMDL.

4. *WLA Values.* If separate EPA-approved or EPA-established TMDLs are prepared for different segments of the same watershed, and the separate TMDLs each include WLAs for the same pollutant for one or more of the same point sources, then WQBELs for that pollutant for the point source(s) shall be consistent with the most stringent of those WLAs in order to ensure attainment of all applicable water quality standards.

5. *Margin of Safety (MOS).* Each TMDL shall include a MOS sufficient to account for technical uncertainties in establishing the TMDL and shall describe the manner in which the MOS is determined and incorporated into the TMDL. The MOS may be provided by leaving a portion of the loading capacity unallocated or by using conservative modeling assumptions to establish WLAs and LAs. If a portion of the loading capacity is left unallocated to provide a MOS, the amount left unallocated shall be described. If conservative modeling assumptions are relied on to provide a MOS, the specific assumptions providing the MOS shall be identified.

6. *More Stringent Requirements.* States and Tribes may exercise authority reserved to them under section 510 of the CWA to develop more stringent TMDLs (including WLAs and LAs) than are required herein, provided that all LAs in such TMDLs reflect actual nonpoint source loads or those loads that can reasonably be expected to occur within a reasonable time-period as a result of implementing nonpoint source controls.

7. *Accumulation in Sediments.* TMDLs shall reflect, where appropriate and where sufficient data are available, contributions to the water column from sediments inside and outside of any applicable mixing zones. TMDLs shall be sufficiently stringent so as to prevent accumulation of the pollutant of concern in sediments to levels injurious to designated or existing uses, human health, wildlife and aquatic life.

8. *Wet Weather Events.* Notwithstanding the exception provided for the establishment of controls on wet weather point sources in § 132.4(e)(1), TMDLs shall reflect, where appropriate and where sufficient data are available, discharges resulting from wet weather events. This procedure does not provide specific procedures for considering discharges resulting from wet weather events. However, some of the provisions of procedure 3 may be deemed appropriate for considering wet weather events on a case-by-case basis.

9. *Background Concentration of Pollutants.* The representative background concentration of pollutants shall be established in accordance with this subsection to develop TMDLs, WLAs calculated in the absence of a TMDL, or preliminary WLAs for purposes of determining the need for WQBELs under procedure 5 of appendix F. Background loadings may be accounted for in a TMDL through an allocation to a single ''background'' category or through individual allocations to the various background sources.

a. *Definition of Background.* ''Background'' represents all loadings that: (1) flow from upstream waters into the specified watershed, waterbody or waterbody segment for which a TMDL, WLA in the absence of a TMDL or preliminary WLA for the purpose of determining the need for a WQBEL is being developed; (2) enter the specified watershed, waterbody or waterbody segment through atmospheric deposition or sediment release or resuspension; or (3) occur within the watershed, waterbody or waterbody segment as a result of chemical reactions.

b. *Data considerations.* When determining what available data are acceptable for use in calculating background, the State or Tribe should use best professional judgment, including consideration of the sampling location and the reliability of the data through comparison to reported analytical detection levels and quantification levels. When data in more than one of the data sets or categories described in section B.9.c.i through B.9.c.iii below exist, best professional judgment should be used to select the one data set that most accurately reflects or estimates background concentrations. Pollutant degradation and transport information may be considered when utilizing pollutant loading data.

c. *Calculation requirements.* Except as provided below, the representative background concentration for a pollutant in the specified watershed, waterbody or waterbody segment shall be established on a case-by-case basis as the geometric mean of:

i. Acceptable available water column data; or

ii. Water column concentrations estimated through use of acceptable available caged or resident fish tissue data; or

iii. Water column concentrations estimated through use of acceptable available or projected pollutant loading data.

d. *Detection considerations.*

i. Commonly accepted statistical techniques shall be used to evaluate data sets consisting of values both above and below the detection level.

ii. When all of the acceptable available data in a data set or category, such as water column, caged or resident fish tissue or pollutant loading data, are below the level of detection for a pollutant, then all the data for that pollutant in that data set shall be assumed to be zero.

10. *Effluent Flow.* If WLAs are expressed as concentrations of pollutants, the TMDL shall also indicate the point source effluent flows assumed in the analyses. Mass loading limitations established in NPDES permits must be consistent with both the WLA and assumed effluent flows used in establishing the TMDL.

11. *Reserved Allocations.* TMDLs may include reserved allocations of loading capacity to accommodate future growth and additional sources. Where such reserved allocations are not included in a TMDL, any increased loadings of the pollutant for which the TMDL was developed that are due to a new or expanded discharge shall not be allowed unless the TMDL is revised in accordance with these proceudres to include an allocation for the new or expanded discharge.

C. *Mixing Zones for Bioaccumulative Chemicals of Concern (BCCs).* The following requirements shall be applied in establishing TMDLs, WLAs in the absence of TMDLs, and preliminary WLAs for purposes of determining the need for WQBELs under procedure 5 of appendix F, for BCCs:

1. Beginning on March 23, 1997, there shall be no mixing available for new discharges of BCCs to the Great Lakes System. WLAs established through TMDLs, WLAs in the absence of TMDLs, and preliminary WLAs for purposes of determining the need for WQBELs for new discharges of BCCs shall be set equal to the most stringent applicable water quality criteria or values for the BCCs in question.

2. For purposes of section C of procedure 3 of appendix F, new discharges are defined as: (1) discharges from new Great Lakes dischargers; or (2) new or expanded discharges from an existing Great Lakes discharger. All other discharges of BCCs are defined as existing discharges.

3. Up until March 23, 2007, mixing zones for BCCs may be allowed for existing discharges to the Great Lakes System pursuant to the procedures specified in sections D and E of this procedure.

4. Except as provided in sections C.5 and C.6 of this procedure, permits issued on or after March 23, 1997 shall not authorize mixing zones for existing discharges of BCCs to the Great Lakes System after March 23, 2007. After March 23, 2007, WLAs established through TMDLs, WLAs established in the absence of TMDLs and preliminary WLAs for purposes of determining the need for WQBELs under procedure 5 of appendix F for existing dischrges of BCCs to the Great Lakes System shall be set equal to the most stringent applicable water quality criteria or values for the BCCs in question.

5. *Exception for Water Conservation.* States and Tribes may grant mixing zones for any existing discharge of BCCs to the Great Lakes System beyond the dates specified in sections C.3 and C.4 of this procedure, where it can be demonstrated, on a case-by-case basis, that failure to grant a mixing zone would preclude water conservation measures that would lead to overall load reductions in BCCs, even though higher concentrations of BCCs occur in the effluent. Such mixing zones must also be consistent with sections D and E of this procedure.

6. *Exception for Technical and Economic Considerations.* States and Tribes may grant mixing zones beyond the dates specified in sections C.3 and C.4 of this procedure for any existing discharges of a BCC to the Great Lakes System upon the request of a discharger subject to the limited circumstances specified in sections C.6.a through C.6.d below. Such mixing zones shall also be consistent with sections D and E of this procedure.

a. The permitting authority must determine that:

i. The discharger is in compliance with and will continue to implement all applicable technology-based treatment and pretreatment requirements of CWA sections 301, 302, 304, 306, 307, 401, and 402, and is in compliance with its existing NPDES water quality-based effluent limitations, including those based on a mixing zone; and

ii. The discharger has reduced and will continue to reduce the loading of the BCC for which a mixing zone is requested to the maximum extent possible.

b. In making the determination in section C.6.a above, the State or Tribal authority should consider:

i. The availability and feasibility, including cost effectiveness, of additional controls or pollution prevention measures for reducing and ultimately eliminating BCCs for that discharger, including those used by similar dischargers;

ii. Whether the discharger or affected communities will suffer unreasonable economic effects if the mixing zone is eliminated;

iii. The extent to which the discharger will implement an ambient monitoring plan to ensure compliance with water quality criteria at the edge of any authorized mixing zone or to ensure consistency with any applicable TMDL or such other strategy consistent with section A of this procedure; and,

iv. Other information the State or Tribe deems appropriate.

c. Any exceptions to the mixing zone elimination provision for existing discharges of BCCs granted pursuant to this section shall:

i. Not result in any less stringent limitations than those existing March 23, 1997;

ii. Not likely jeopardize the continued existence of any endangered or threatened species listed under section 4 of the ESA or result in the destruction or adverse modification of such species' critical habitat;

iii. Be limited to one permit term unless the permitting authority makes a new determination in accordance with this section for each successive permit application in which a mixing zone for the BCC(s) is sought;

iv. Reflect all information relevant to the size of the mixing zone considered by the State or Tribe under subsection b above;

v. Protect all designated and existing uses of the receiving water;

vi. Meet all applicable aquatic life, wildlife and human health criteria and values at the edge of the mixing zone and, as appropriate, within the mixing zone or be consistent with any appropriate TMDL or such other strategy consistent with section A of this procedure;

vii. Ensure the discharger has developed and conducted a pollutant minimization program for the BCC(s) if required to do so under regulations adopted consistent with procedure 8 of appendix F; and

viii. Ensure that alternative means for reducing BCCs elsewhere in the watershed are evaluated.

d. For each draft NPDES permit that would allow a mixing zone for one or more BCCs after March 23, 2007, the fact sheet or statement of basis for the draft permit, required to be made available through public notice under 40 CFR 124.6(e), shall:

i. Specify the mixing provisions used in calculating the permit limits; and

ii. Identify each BCC for which a mixing zone is proposed.

D. *Deriving TMDLs, WLAs, and LAs for Point and Nonpoint Sources: WLAs in the Absence of a TMDL; and Preliminary WLAs for Purposes of Determining the Need for WQBELs for OWGL.* This section addresses conditions for deriving TMDLs for Open Waters of the Great Lakes (OWGL), inland lakes and other waters of the Great Lakes System with no appreciable flow relative to their volumes. State and Tribal procedures to derive

TMDLs under this section must be consistent with (as protective as) the general conditions in section B of this procedure, CWA section 303(d), existing regulations (40 CFR 130.7), section C of this procedure, and sections D.1. through D.4 below. State and Tribal procedures to derive WLAs calculated in the absence of a TMDL and preliminary WLAs for purposes of determining the need for WQBELs under procedure 5 of appendix F must be consistent with sections B.9, C.1, C3 through C.6, and D. 1 through D.4 of this procedure.

1. Individual point source WLAs and preliminary WLAs for purposes of determining the need for WQBELs under procedure 5 of appendix F shall assume no greater dilution than one part effluent to 10 parts receiving water for implementation of numeric and narrative chronic criteria and values (including, but not limited to human cancer criteria, human cancer values, human noncancer values, human noncancer criteria, wildlife criteria, and chronic aquatic life criteria and values) unless an alternative mixing zone is demonstrated as appropriate in a mixing zone demonstration conducted pursuant to section F of this procedure. In no case shall a mixing zone be granted that exceeds the area where discharge-induced mixing occurs.

2. Appropriate mixing zone assumptions to be used in calculating load allocations for nonpoint sources shall be determined, consistent with applicable State or Tribal requirements, on a case-by-case basis.

3. WLAs and preliminary WLAs based on acute aquatic life criteria or values shall not exceed the Final Acute Value (FAV), unless a mixing zone demonstration is conducted and approved pursuant to section F of this procedure. If mixing zones from two or more proximate sources interact or overlap, the combined effect must be evaluated to ensure that applicable criteria and values will be met in the area where acute mixing zones overlap.

4. In no case shall a mixing zone be granted that would likely jeopardize the continued existence of any endangered or threatened species listed under section 4 of the ESA or result in the destruction or adverse modification of such species' critical habitat.

E. *Deriving TMDLs, WLAs, and LAs for Point and Nonpoint Sources; WLAs in the Absence of a TMDL; and Preliminary WLAs for the Purposes of Determining the Need for WQBELs for Great Lakes Systems Tributaries and Connecting Channels.* This section describes conditions for deriving TMDLs for tributaries and connecting channels of the Great Lakes System that exhibit appreciable flows relative to their volumes. State and Tribal procedures to derive TMDLs must be consistent with the general conditions listed in section B of this procedure, section C of this procedure, existing TMDL regulations (40 CFR 130.7) and specific conditions E.1 through E.5. State and Tribal procedures to derive WLAs calculated in the absence of a TMDL, and preliminary WLAs for purposes of determining reasonable potential under procedure 5 of this appendix for discharges to tributaries and connecting channels must be consistent with sections B.9, C.1, C.3 through C.6, and E.1 through E.5 of this procedure.

1. *Stream Design.* These design flows must be used unless data exist to demonstrate that an alternative stream design flow is appropriate for stream-specific and pollutant-specific conditions. For purposes of calculating a TMDL, WLAs in the absence of a TMDL, or preliminary WLAs for the purposes of determining reasonable potential under procedure 5 of this appendix, using a steady-state model, the stream design flows shall be:

a. The 7-day, 10-year stream design flow (7Q10), or the 4-day, 3-year biologically-based stream design flow for chronic aquatic life criteria or values;

b. The 1-day, 10-year stream design flow (1Q10), for acute aquatic life criteria or values;

c. The harmonic mean flow for human health criteria or values;

d. The 90-day, 10-year flow (90Q10) for wildlife criteria.

e. TMDLs, WLAs in the absence of TMDLs, and preliminary WLAs for the purpose of determining the need for WQBELs calculated using dynamic modelling do not need to incorporate the stream design flows specified in sections E.1.a through E.1.d of this procedure.

2. *Loading Capacity.* The loading capacity is the greatest amount of loading that a water can receive without violating water quality standards. The loading capacity is initially calculated at the farthest downstream location in the watershed drainage basin. The maximum allowable loading consistent with the attainment of each applicable numeric criterion or value for a given pollutant is determined by multiplying the applicable criterion or value by the flow at the farthest downstream location in the tributary basin at the design flow condition described above. This loading is then compared to the loadings at sites within the basin to assure that applicable numeric criteria or values for a given pollutant are not exceeded at all applicable sites. The lowest load is then selected as the loading capacity.

3. *Polluant Degradation.* TMDLs, WLAs in the absence of a TMDL and preliminary WLAs for purposes of determining the need for WQBELs under procedure 5 of appendix F shall be based on the assumption that a pollutant does not degrade. However, the regulatory authority may take into account degradation of the pollutant if each of the following conditions are met.

a. Scientifically valid field studies or other relevant information demonstrate that degradation of the pollutant is expected to occur under the full range of environmental conditions expected to be encountered;

b. Scientifically valid field studies or other relevant information address other factors that affect the level of pollutants in the water column including, but not limited to, resuspension of sediments, chemical speciation, and biological and chemical transformation.

4. *Acute Aquatic Life Criteria and Values.* WLAs and LAs established in a TMDL, WLAs in the absence of a TMDL, and preliminary WLAs for the purpose of determining the need for WQBELs based on acute aquatic life criteria or values shall not exceed the FAV, unless a mixing zone demonstration is completed and approved pursuant to section F of this procedure. If mixing zones from two or more proximate sources interact or overlap, the combined effect must be evaluated to ensure that applicable criteria and values will be met in the area where any applicable acute mixing zones overlap. This acute WLA review shall include, but not be limited to, consideration of:

a. The expected dilution under all effluent flow and concentration conditions at stream design flow;

b. Maintenance of a zone of passage for aquatic organisms; and

c. Protection of critical aquatic habitat.

In no case shall a permitting authority grant a mixing zone that would likely jeopardize the continued existence of any endangered or threatened species listed under section 4 of the ESA or result in the destruction or adverse modification of such species' critical habitat.

5. *Chronic Mixing Zones.* WLAs and LAs established in a TMDL, WLAs in the absence of a TMDL, and preliminary WLAs for the purposes of determining the need for WQBELs for protection of aquatic life, wildlife and human health from chronic effects shall be calculated using a dilution fraction no greater than 25 percent of the stream design flow unless a mixing zone demonstration pursuant to section F of this procedure is conducted and approved. A demonstration for a larger mixing zone may be provided, if approved and implemented in accordance with section F of this procedure. In no case shall a permitting authority grant a mixing zone that would likely jeopardize the continued existence of any endangered or threatened species listed under section 4 of the ESA or result in the destruction or adverse modification of such species' critical habitat.

F. *Mixing Zone Demonstration Requirements.*

1. For purposes of establishing a mixing zone other than as specified in sections D and E above, a mixing zone demonstration must:

a. Describe the amount of dilution occurring at the boundaries of the proposed mixing zone and the size, shape, and location of the area of mixing, including the manner in which diffusion and dispersion occur;

b. For sources discharging to the open waters of the Great Lakes (OWGLs), define the location at which discharge-induced mixing ceases;

c. Document the substrate character and geomorphology within the mixing zone;

d. Show that the mixing zone does not interfere with or block passage of fish or aquatic life;

e. Show that the mixing zone will be allowed only to the extent that the level of the pollutant permitted in the waterbody would not likely jeopardize the continued existence of any endangered or threatened species listed under section 4 of the ESA or result in the destruction or adverse modification of such species' critical habitat;

f. Show that the mixing zone does not extend to drinking water intakes;

g. Show that the mixing zone would not otherwise interfere with the designated or existing uses of the receiving water or downstream waters;

h. Document background water quality concentrations;

i. Show that the mixing zone does not promote undesirable aquatic life or result in a dominance of nuisance species; and

j. Provide that by allowing additional mixing/dilution:

i. Substances will not settle to form objectionable deposits;

ii. Floating debris, oil, scum, and other matter in concentrations that form nuisances will not be produced; and

iii. Objectionable color, odor, taste or turbidity will not be produced.

2. In addition, the mixing zone demonstration shall address the following factors:

a. Whether or not adjacent mixing zones overlap;

b. Whether organisms would be attracted to the area of mixing as a result of the effluent character; and

c. Whether the habitat supports endemic or naturally occurring species.

3. The mixing zone demonstration must be submitted to EPA for approval. Following approval of a mixing zone demonstration consistent with sections F.1 and F.2, adjustment to the dilution ratio specified in section D.1 of this procedure shall be limited to the dilution available in the area where discharger-induced mixing occurs.

4. The mixing zone demonstration shall be based on the assumption that a pollutant does not degrade within the proposed mixing zone, unless:

a. Scientifically valid field studies or other relevant information demonstrate that degradation of the pollutant is expected to

occur under the full range of environmental conditions expected to be encountered; and

b. Scientifically valid field studies or other relevant information address other factors that affect the level of pollutants in the water column including, but not limited to, resuspension of sediments, chemical speciation, and biological and chemical transformation.

PROCEDURE 4: ADDITIVITY

The Great Lakes States and Tribes shall adopt additivity provisions consistent with (as protective as) this procedure.

A. The Great Lakes States and Tribes shall adopt provisions to protect human health from the potential adverse additive effects from both the noncarcinogenic and carcinogenic components of chemical mixtures in effluents. For the chlorinated dibenzo-p-dioxins (CDDs) and chlorinated dibenzofurans (CDFs) listed in Table 1, potential adverse additive effects in effluents shall be accounted for in accordance with section B of this procedure.

B. *Toxicity Equivalency Factors (TEFs)/Bioaccumulation Equivalency Factors (BEFs).*

1. The TEFs in Table 1 and BEFs in Table 2 shall be used when calculating a 2,3,7,8-TCDD toxicity equivalence concentration in effluent to be used when implementing both human health noncancer and cancer criteria. The chemical concentration of each CDDs and CDFs in effluent shall be converted to a 2,3,7,8-TCDD toxicity equivalence concentration in effluent by (a) multiplying the chemical concentration of each CDDs and CDFs in the effluent by the appropriate TEF in Table 1 below, (b) multiplying each product from step (a) by the BEF for each CDDs and CDFs in Table 2 below, and (c) adding all final products from step (b). The equation for calculating the 2,3,7,8-TCDD toxicity equivalence concentration in effluent is:

$$(TEC)_{tcdd} = \sum (C)_x (TEF)_x (BEF)_x$$

where:

$(TEC)_{tcdd}$=2,3,7,8-TCDD toxicity equivalence concentration in effluent

$(C)_x$=concentration of total chemical x in effluent

$(TEF)_x$=TCDD toxicity equivalency factor for x

$(BEF)_x$=TCDD bioaccumulation equivalency factor for x

2. The 2,3,7,8-TCDD toxicity equivalence concentration in effluent shall be used when developing waste load allocations under procedure 3, preliminary waste load allocations for purposes of determining reasonable potential under procedure 5, and for purposes of establishing effluent quality limits under procedure 5.

TABLE 1.—TOXICITY EQUIVALENCY FACTORS FOR CDDS AND CDFS

Congener	TEF
2,3,7,8-TCDD	1.0
1,2,3,7,8-PeCDD	0.5
1,2,3,4,7,8-HxCDD	0.1
1,2,3,6,7,8-HxCDD	0.1
1,2,3,7,8,9-HxCDD	0.1
1,2,3,4,6,7,8-HpCDD	0.01
OCDD	0.001
2,3,7,8-TCDF	0.1
1,2,3,7,8-PeCDF	0.05
2,3,4,7,8-PeCDF	0.5
1,2,3,4,7,8-HxCDF	0.1
1,2,3,6,7,8-HxCDF	0.1
2,3,4,6,7,8-HxCDF	0.1
1,2,3,7,8,9-HxCDF	0.1
1,2,3,4,6,7,8-HpCDF	0.01
1,2,3,4,7,8,9-HpCDF	0.01
OCDF	0.001

TABLE 2.—BIOACCUMULATION EQUIVALENCY FACTORS FOR CDDS AND CDFS

Congener	BEF
2,3,7,8-TCDD	1.0
1,2,3,7,8-PeCDD	0.9
1,2,3,4,7,8-HxCDD	0.3
1,2,3,6,7,8-HxCDD	0.1
1,2,3,7,8,9-HxCDD	0.1
1,2,3,4,6,7,8-HpCDD	0.05
OCDD	0.01
2,3,7,8-TCDF	0.8
1,2,3,7,8-PeCDF	0.2
2,3,4,7,8-PeCDF	1.6
1,2,3,4,7,8-HxCDF	0.08
1,2,3,6,7,8-HxCDF	0.2
2,3,4,6,7,8-HxCDF	0.7
1,2,3,7,8,9-HxCDF	0.6
1,2,3,4,6,7,8-HpCDF	0.01
1,2,3,4,7,8,9-HpCDF	0.4
OCDF	0.02

PROCEDURE 5: REASONABLE POTENTIAL TO EXCEED WATER QUALITY STANDARDS

Great Lakes States and Tribes shall adopt provisions consistent with (as protective as) this procedure. If a permitting authority determines that a pollutant is or may be discharged into the Great Lakes System at a level which will cause, have the reasonable potential to cause, or contribute to an excursion above any Tier I criterion or Tier II value, the permitting authority shall incorporate a water quality-based effluent limitation (WQBEL) in an NPDES permit for the discharge of that pollutant. When facility-specific effluent monitoring data are available, the permitting authority shall make this determination by developing preliminary effluent limitations (PEL) and comparing those effluent limitations to the projected effluent quality (PEQ) of the discharge in accordance with the following procedures. In all cases, the permitting authority shall use any valid, relevant, representative information that indicates a reasonable

potential to exceed any Tier I criterion or Tier II value.

A. *Developing Preliminary Effluent Limitations on the Discharge of a Pollutant From a Point Source.*

1. The permitting authority shall develop preliminary wasteload allocations (WLAs) for the discharge of the pollutant from the point source to protect human health, wildlife, acute aquatic life, and chronic aquatic life, based upon any existing Tier I criteria. Where there is no Tier I criterion nor sufficient data to calculate a Tier I criterion, the permitting authority shall calculate a Tier II value for such pollutant for the protection of human health, and aquatic life and the preliminary WLAs shall be based upon such values. Where there is insufficient data to calculate a Tier II value, the permitting authority shall apply the procedure set forth in section C of this procedure to determine whether data must be generated to calculate a Tier II value.

2. The following provisions in procedure 3 of appendix F shall be used as the basis for determining preliminary WLAs in accordance with section 1 of this procedure: procedure 3.B.9, Background Concentrations of Pollutants; procedure 3.C, Mixing Zones for Bioaccumulative Chemicals of Concern (BCCs), procedures 3.C.1, and 3.C.3 through 3.C.6; procedure 3.D, Deriving TMDLs for Discharges to Lakes (when the receiving water is an open water of the Great Lakes (OWGL), an inland lake or other water of the Great Lakes System with no appreciable flow relative to its volume); procedure 3.E, Deriving TMDLs, WLAs and Preliminary WLAs, and load allocations (LAs) for Discharges to Great Lakes System Tributaries (when the receiving water is a tributary or connecting channel of the Great Lakes that exhibits appreciable flow relative to its volume); and procedure 3.F, Mixing Zone Demonstration Requirements.

3. The permitting authority shall develop PELs consistent with the preliminary WLAs developed pursuant to sections A.1 and A.2 of this procedure, and in accordance with existing State or Tribal procedures for converting WLAs into WQBELs. At a minimum:

a. The PELs based upon criteria and values for the protection of human health and wildlife shall be expressed as monthly limitations;

b. The PELs based upon criteria and values for the protection of aquatic life from chronic effects shall be expressed as either monthly limitations or weekly limitations; and

c. The PELs based upon the criteria and values for the protection of aquatic life from acute effects shall be expressed as daily limitations.

B. *Determining Reasonable Potential Using Effluent Pollutant Concentration Data.*

If representative, facility-specific effluent monitoring data samples are available for a pollutant discharged from a point source to the waters of the Great Lakes System, the permitting authority shall apply the following procedures:

1. The permitting authority shall specify the PEQ as the 95 percent confidence level of the 95th percentile based on a log-normal distribution of the effluent concentration; or the maximum observed effluent concentration, whichever is greater. In calculating the PEQ, the permitting authority shall identify the number of effluent samples and the coefficient of variation of the effluent data, obtain the appropriate multiplying factor from Table 1 of procedure 6 of appendix F, and multiply the maximum effluent concentration by that factor. The coefficient of variation of the effluent data shall be calculated as the ratio of the standard deviation of the effluent data divided by the arithmetic average of the effluent data, except that where there are fewer than ten effluent concentration data points the coefficient of variation shall be specified as 0.6. If the PEQ exceeds any of the PELs developed in accordance with section A.3 of this procedure, the permitting authority shall establish a WQBEL in a NPDES permit for such pollutant.

2. In lieu of following the procedures under section B.1 of this procedure, the permitting authority may apply procedures consistent with the following:

a. The permitting authority shall specify the PEQ as the 95th percentile of the distribution of the projected population of daily values of the facility-specific effluent monitoring data projected using a scientifically defensible statistical method that accounts for and captures the long-term daily variability of the effluent quality, accounts for limitations associated with sparse data sets and, unless otherwise shown by the effluent data set, assumes a lognormal distribution of the facility-specific effluent data. If the PEQ exceeds the PEL based on the criteria and values for the protection of aquatic life from acute effects developed in accordance with section A.3 of this procedure, the permitting authority shall establish a WQBEL in an NPDES permit for such pollutant;

b. The permitting authority shall calculate the PEQ as the 95th percentile of the distribution of the projected population of monthly averages of the facility-specific effluent monitoring data using a scientifically defensible statistical method that accounts for and captures the long-term variability of the monthly average effluent quality, accounts for limitations associated with sparse data sets and, unless otherwise shown by the effluent data set, assumes a lognormal distribution of the facility-specific effluent data. If the PEQ exceeds the PEL based on criteria and values for the protection of aquatic life from chronic effects, human health or wildlife developed in accordance

with section A.3 of this procedure, the permitting authority shall establish a WQBEL in an NPDES permit for such pollutant; and

c. The permitting authority shall calculate the PEQ as the 95th percentile of the distribution of the projected population of weekly averages of the facility-specific effluent monitoring data using a scientifically defensible statistical method that accounts for and captures the long-term variability of the weekly average effluent quality, accounts for limitations associated with sparse data sets and, unless otherwise shown by the effluent data set, assumes a lognormal distribution of the facility-specific effluent data. If the PEQ exceeds the PEL based on criteria and values to protect aquatic life from chronic effects developed in accordance with section A.3 of this procedure, the permitting authority shall establish a WQBEL in an NPDES permit for such pollutant.

C. *Developing Necessary Data to Calculate Tier II Values Where Such Data Does Not Currently Exist.*

1. Except as provided in sections C.2, C.4, or D of this procedure, for each pollutant listed in Table 6 of part 132 that a permittee reports as known or believed to be present in its effluent, and for which pollutant data sufficient to calculate Tier II values for noncancer human health, acute aquatic life and chronic aquatic life do not exist, the permitting authority shall take the following actions:

a. The permitting authority shall use all available, relevant information, including Quantitative Structure Activity Relationship information and other relevant toxicity information, to estimate ambient screening values for such pollutant which will protect humans from health effects other than cancer, and aquatic life from acute and chronic effects.

b. Using the procedures specified in sections A.1 and A.2 of this procedure, the permitting authority shall develop preliminary WLAs for the discharge of the pollutant from the point source to protect human health, acute aquatic life, and chronic aquatic life, based upon the estimated ambient screening values.

c. The permitting authority shall develop PELs in accordance with section A.3 of this procedure, which are consistent with the preliminary WLAs developed in accordance with section C.1.b of this procedure.

d. The permitting authority shall compare the PEQ developed according to the procedures set forth in section B of this procedure to the PELs developed in accordance with section C.1.c of this procedure. If the PEQ exceeds any of the PELs, the permitting authority shall generate or require the permittee to generate the data necessary to derive Tier II values for noncancer human health, acute aquatic life and chronic aquatic life.

e. The data generated in accordance with section C.1.d of this procedure shall be used in calculating Tier II values as required under section A.1 of this procedure. The calculated Tier II value shall be used in calculating the preliminary WLA and PEL under section A of this procedure, for purposes of determining whether a WQBEL must be included in the permit. If the permitting authority finds that the PEQ exceeds the calculated PEL, a WQBEL for the pollutant or a permit limit on an indicator parameter consistent with 40 CFR 122.44(d)(1)(vi)(C) must be included in the permit.

2. With the exception of bioaccumulative chemicals of concern (BCCs), a permitting authority is not required to apply the procedures set forth in section C.1 of this procedure or include WQBELs to protect aquatic life for any pollutant listed in Table 6 of part 132 discharged by an existing point source into the Great Lakes System, if:

a. There is insufficient data to calculate a Tier I criterion or Tier II value for aquatic life for such pollutant;

b. The permittee has demonstrated through a biological assessment that there are no acute or chronic effects on aquatic life in the receiving water; and

c. The permittee has demonstrated in accordance with procedure 6 of this appendix that the whole effluent does not exhibit acute or chronic toxicity.

3. Nothing in sections C.1 or C.2 of this procedure shall preclude or deny the right of a permitting authority to:

a. Determine, in the absence of the data necessary to derive a Tier II value, that the discharge of the pollutant will cause, have the reasonable potential to cause, or contribute to an excursion above a narrative criterion for water quality; and

b. Incorporate a WQBEL for the pollutant into an NPDES permit.

4. If the permitting authority develops a WQBEL consistent with section C.3 of this procedure, and the permitting authority demonstrates that the WQBEL developed under section C.3 of this procedure is at least as stringent as a WQBEL that would have been based upon the Tier II value or values for that pollutant, the permitting authority shall not be obligated to generate or require the permittee to generate the data necessary to derive a Tier II value or values for that pollutant.

D. *Consideration of Intake Pollutants in Determining Reasonable Potential.*

1. *General.*

a. Any procedures adopted by a State or Tribe for considering intake pollutants in water quality-based permitting shall be consistent with this section and section E.

b. The determinations under this section and section E shall be made on a pollutant-by-pollutant, outfall-by-outfall, basis.

c. This section and section E apply only in the absence of a TMDL applicable to the discharge prepared by the State or Tribe and approved by EPA, or prepared by EPA pursuant to 40 CFR 130.7(d), or in the absence of an assessment and remediation plan submitted and approved in accordance with procedure 3.A. of appendix F. This section and section E do not alter the permitting authority's obligation under 40 CFR 122.44(d)(vii)(B) to develop effluent limitations consistent with the assumptions and requirements of any available WLA for the discharge, which is part of a TMDL prepared by the State or Tribe and approved by EPA pursuant to 40 CFR 130.7, or prepared by EPA pursuant to 40 CFR 130.7(d).

2. *Definition of Same Body of Water.*

a. This definition applies to this section and section E of this procedure.

b. An intake pollutant is considered to be from the same body of water as the discharge if the permitting authority finds that the intake pollutant would have reached the vicinity of the outfall point in the receiving water within a reasonable period had it not been removed by the permittee. This finding may be deemed established if:

i. The background concentration of the pollutant in the receiving water (excluding any amount of the pollutant in the facility's discharge) is similar to that in the intake water;

ii. There is a direct hydrological connection between the intake and discharge points; and

iii. Water quality characteristics (e.g., temperature, Ph, hardness) are similar in the intake and receiving waters.

c. The permitting authority may also consider other site-specific factors relevant to the transport and fate of the pollutant to make the finding in a particular case that a pollutant would or would not have reached the vicinity of the outfall point in the receiving water within a reasonable period had it not been removed by the permittee.

d. An intake pollutant from groundwater may be considered to be from the same body of water if the permitting authority determines that the pollutant would have reached the vicinity of the outfall point in the receiving water within a reasonable period had it not been removed by the permittee, except that such a pollutant is not from the same body of water if the groundwater contains the pollutant partially or entirely due to human activity, such as industrial, commercial, or municipal operations, disposed actions, or treatment processes.

e. An intake pollutant is the amount of a pollutant that is present in waters of the United States (including groundwater as provided in section D.2.d of this procedure) at the time it is withdrawn from such waters by the discharger or other facility (e.g., public water supply) supplying the discharger with intake water.

3. *Reasonable Potential Determination.*

a. The permitting authority may use the procedure described in this section of procedure 5 in lieu of procedures 5.A through C provided the conditions specified below are met.

b. The permitting authority may determine that there is no reasonable potential for the discharge of an identified intake pollutant or pollutant parameter to cause or contribute to an excursion above a narrative or numeric water quality criterion within an applicable water quality standard where a discharger demonstrates to the satisfaction of the permitting authority (based upon information provided in the permit application or other information deemed necessary by the permitting authority) that:

i. The facility withdraws 100 percent of the intake water containing the pollutant from the same body of water into which the discharge is made;

ii. The facility does not contribute any additional mass of the identified intake pollutant to its wastewater;

iii. The facility does not alter the identified intake pollutant chemically or physically in a manner that would cause adverse water quality impacts to occur that would not occur if the pollutants were left instream;

iv. The facility does not increase the identified intake pollutant concentration, as defined by the permitting authority, at the edge of the mixing zone, or at the point of discharge if a mixing zone is not allowed, as compared to the pollutant concentration in the intake water, unless the increased concentration does not cause or contribute to an excursion above an applicable water quality standard; and

v. The timing and location of the discharge would not cause adverse water quality impacts to occur that would not occur if the identified intake pollutant were left instream.

c. Upon a finding under section D.3.b of this procedure that a pollutant in the discharge does not cause, have the reasonable potential to cause, or contribute to an excursion above an applicable water quality standard, the permitting authority is not required to include a WQBEL for the identified intake pollutant in the facility's permit, provided:

i. The NPDES permit fact sheet or statement of basis includes a specific determination that there is no reasonable potential for the discharge of an identified intake pollutant to cause or contribute to an excursion above an applicable narrative or numeric water quality criterion and references appropriate supporting documentation included in the administrative record;

ii. The permit requires all influent, effluent, and ambient monitoring necessary to

demonstrate that the conditions in section D.3.b of this procedure are maintained during the permit term; and

iii. The permit contains a reopener clause authorizing modification or revocation and reissuance of the permit if new information indicates changes in the conditions in section D.3.b of this procedure.

d. Absent a finding under section D.3.b of this procedure that a pollutant in the discharge does not cause, have the reasonable potential to cause, or contribute to an excursion above an applicable water quality standard, the permitting authority shall use the procedures under sections 5.A through C of this procedure to determine whether a discharge causes, has the reasonable potential to cause, or contribute to an excursion above an applicable narrative or numeric water quality criterion.

E. *Consideration of Intake Pollutants in Establishing WQBELs.*

1. *General.* This section applies only when the concentration of the pollutant of concern upstream of the discharge (as determined using the provisions in procedure 3.B.9 of appendix F) exceeds the most stringent applicable water quality criterion for that pollutant.

2. The requirements of sections D.1–D.2 of this procedure shall also apply to this section.

3. *Intake Pollutants from the Same Body of Water.*

a. In cases where a facility meets the conditions in sections D.3.b.i and D.3.b.iii through D.3.b.v of this procedure, the permitting authority may establish effluent limitations allowing the facility to discharge a mass and concentration of the pollutant that are no greater than the mass and concentration of the pollutant identified in the facility's intake water (''no net addition limitations''). The permit shall specify how compliance with mass and concentration limitations shall be assessed. No permit may authorize ''no net addition limitations'' which are effective after March 23, 2007. After that date, WQBELs shall be established in accordance with procedure 5.F.2 of appendix F.

b. Where proper operation and maintenance of a facility's treatment system results in removal of a pollutant, the permitting authority may establish limitations that reflect the lower mass and/or concentration of the pollutant achieved by such treatment, taking into account the feasibility of establishing such limits.

c. For pollutants contained in intake water provided by a water system, the concentration of the intake pollutant shall be determined at the point where the raw water supply is removed from the same body of water, except that it shall be the point where the water enters the water supplier's distribution system where the water treatment system removes any of the identified pollutants from the raw water supply. Mass shall be determined by multiplying the concentration of the pollutant determined in accordance with this paragraph by the volume of the facility's intake flow received from the water system.

4. *Intake Pollutants from a Different Body of Water.* Where the pollutant in a facility's discharge originates from a water of the United States that is not the same body of water as the receiving water (as determined in accordance with section D.2 of this procedure), WQBELs shall be established based upon the most stringent applicable water quality criterion for that pollutant.

5. *Multiple Sources of Intake Pollutants.* Where a facility discharges intake pollutants that originate in part from the same body of water, and in part from a different body of water, the permitting authority may apply the procedures of sections E.3 and E.4 of this procedure to derive an effluent limitation reflecting the flow-weighted average of each source of the pollutant, provided that adequate monitoring to determine compliance can be established and is included in the permit.

F. *Other Applicable Conditions.*

1. In addition to the above procedures, effluent limitations shall be established to comply with all other applicable State, Tribal and Federal laws and regulations, including technology-based requirements and antidegradation policies.

2. Once the permitting authority has determined in accordance with this procedure that a WQBEL must be included in an NPDES permit, the permitting authority shall:

a. Rely upon the WLA established for the point source either as part of any TMDL prepared under procedure 3 of this appendix and approved by EPA pursuant to 40 CFR 130.7, or as part of an assessment and remediation plan developed and approved in accordance with procedure 3.A of this appendix, or, in the absence of such TMDL or plan, calculate WLAs for the protection of acute and chronic aquatic life, wildlife and human health consistent with the provisions referenced in section A.1 of this procedure for developing preliminary wasteload allocations, and

b. Develop effluent limitations consistent with these WLAs in accordance with existing State or Tribal procedures for converting WLAs into WQBELs.

3. When determining whether WQBELs are necessary, information from chemical-specific, whole effluent toxicity and biological assessments shall be considered independently.

4. If the geometric mean of a pollutant in fish tissue samples collected from a waterbody exceeds the tissue basis of a Tier I criterion or Tier II value, after consideration of the variability of the pollutant's

bioconcentration and bioaccumulation in fish, each facility that discharges detectable levels of such pollutant to that water has the reasonable potential to cause or contribute to an excursion above a Tier I criteria or a Tier II value and the permitting authority shall establish a WQBEL for such pollutant in the NPDES permit for such facility.

PROCEDURE 6: WHOLE EFFLUENT TOXICITY REQUIREMENTS

The Great Lakes States and Tribes shall adopt provisions consistent with (as protective as) procedure 6 of appendix F of part 132.

The following definitions apply to this part:

Acute toxic unit (TU_a). $100/LC_{50}$ where the LC_{50} is expressed as a percent effluent in the test medium of an acute whole effluent toxicity (WET) test that is statistically or graphically estimated to be lethal to 50 percent of the test organisms.

Chronic toxic unit (TU_c). 100/NOEC or $100/IC_{25}$, where the NOEC and IC_{25} are expressed as a percent effluent in the test medium.

Inhibition concentration 25 (IC_{25}). the toxicant concentration that would cause a 25 percent reduction in a non-quantal biological measurement for the test population. For example, the IC_{25} is the concentration of toxicant that would cause a 25 percent reduction in mean young per female or in growth for the test population.

No observed effect concentration (NOEC). The highest concentration of toxicant to which organisms are exposed in a full life-cycle or partial life-cycle (short-term) test, that causes no observable adverse effects on the test organisms (i.e., the highest concentration of toxicant in which the values for the observed responses are not statistically significantly different from the controls).

A. *Whole Effluent Toxicity Requirements.* The Great Lakes States and Tribes shall adopt whole effluent toxicity provisions consistent with the following:

1. A numeric acute WET criterion of 0.3 acute toxic units (TU_a) measured pursuant to test methods in 40 CFR part 136, or a numeric interpretation of a narrative criterion establishing that 0.3 TU_a measured pursuant to test methods in 40 CFR part 136 is necessary to protect aquatic life from acute effects of WET. At the discretion of the permitting authority, the foregoing requirement shall not apply in an acute mixing zone that is sized in accordance with EPA-approved State and Tribal methods.

2. A numeric chronic WET criterion of one chronic toxicity unit (TU_c) measured pursuant to test methods in 40 CFR part 136, or a numeric interpretation of a narrative criterion establishing that one TU_c measured pursuant to test methods in 40 CFR part 136 is necessary to protect aquatic life from the chronic effects of WET. At the discretion of the permitting authority, the foregoing requirements shall not apply within a chronic mixing zone consistent with: (a) procedures 3.D.1 and 3.D.4, for discharges to the open of the Great Lakes (OWGL), inland lakes and other waters of the Great Lakes System with no appreciable flow relative to their volume, or (b) procedure 3.E.5 for discharges to tributaries and connecting channels of the Great Lakes System.

B. *WET Test Methods.* All WET tests performed to implement or ascertain compliance with this procedure shall be performed in accordance with methods established in 40 CFR part 136.

C. *Permit Conditions.*

1. Where a permitting authority determines pursuant to section D of this procedure that the WET of an effluent is or may be discharged at a level that will cause, have the reasonable potential to cause, or contribute to an excursion above any numeric WET criterion or narrative criterion within a State's or Tribe's water quality standards, the permitting authority:

a. Shall (except as provided in section C.1.e of this procedure) establish a water quality-based effluent limitation (WQBEL) or WQBELs for WET consistent with section C.1.b of this procedure;

b. Shall calculate WQBELs pursuant to section C.1.a. of this procedure to ensure attainment of the State's or Tribe's chronic WET criteria under receiving water flow conditions described in procedures 3.E.1.a (or where applicable, with procedure 3.E.1.e) for Great Lakes System tributaries and connecting channels, and with mixing zones no larger than allowed pursuant to section A.2. of this procedure. Shall calculate WQBELs to ensure attainment of the State's or Tribe's acute WET criteria under receiving water flow conditions described in procedure 3.E.1.b (or where applicable, with procedure 3.E.1.e) for Great Lakes System tributaries and connecting channels, with an allowance for mixing zones no greater than specified pursuant to section A.1 of this procedure.

c. May specify in the NPDES permit the conditions under which a permittee would be required to perform a toxicity reduction evaluation.

d. May allow with respect to any WQBEL established pursuant to section C.1.a of this procedure an appropriate schedule of compliance consistent with procedure 9 of appendix F; and

e. May decide on a case-by-case basis that a WQBEL for WET is not necessary if the State's or Tribe's water quality standards do not contain a numeric criterion for WET, and the permitting authority demonstrates in accordance with 40 CFR 122.44(d)(1)(v) that chemical-specific effluent limits are sufficient to ensure compliance with applicable criteria.

2. Where a permitting authority lacks sufficient information to determine pursuant to

section D of this procedure whether the WET of an effluent is or may be discharged at levels that will cause, have the reasonable potential to cause, or contribute to an excursion above any numeric WET criterion or narrative criterion within a State's or Tribe's water quality standards, then the permitting authority should consider including in the NPDES permit appropriate conditions to require generation of additional data and to control toxicity if found, such as:

a. WET testing requirements to generate the data needed to adequately characterize the toxicity of the effluent to aquatic life;

b. Language requiring a permit reopener clause to establish WET limits if any toxicity testing data required pursuant to section C.2.a of this procedure indicate that the WET of an effluent is or may be discharged at levels that will cause, have the reasonable potential to cause, or contribute to an excursion above any numeric WET criterion or narrative criterion within a State's or Tribe's water quality standards.

3. Where sufficient data are available for a permitting authority to determine pursuant to section D of this procedure that the WET of an effluent neither is nor may be discharged at a level that will cause, have the reasonable potential to cause, or contribute to an excursion above any numeric WET criterion or narrative criterion within a State's or Tribe's water quality standards, the permitting authority may include conditions and limitations described in section C.2 of this procedure at its discretion.

D. *Reasonable Potential Determinations.* The permitting authority shall take into account the factors described in 40 CFR 122.44(d)(1)(ii) and, where representative facility-specific WET effluent data are available, apply the following requirements in determining whether the WET of an effluent is or may be discharged at a level that will cause, have the reasonable potential to cause, or contribute to an excursion above any numeric WET criterion or narrative criterion within a State's or Tribe's water quality standards.

1. The permitting authority shall characterize the toxicity of the discharge by:

a. Either averaging or using the maximum of acute toxicity values collected within the same day for each species to represent one daily value. The maximum of all daily values for the most sensitive species tested is used for reasonable potential determinations;

b. Either averaging or using the maximum of chronic toxicity values collected within the same calendar month for each species to represent one monthly value. The maximum of such values, for the most sensitive species tested, is used for reasonable potential determinations:

c. Estimating the toxicity values for the missing endpoint using a default acute-chronic ratio (ACR) of 10, when data exist for either acute WET or chronic WET, but not for both endpoints.

2. The WET of an effluent is or may be discharged at a level that will cause, have the reasonable potential to cause, or contribute to an excursion above any numeric acute WET criterion or numeric interpretation of a narrative criterion within a State's or Tribe's water quality standards, when effluent-specific information demonstrates that:

$(TU_a \text{ effluent})\ (B)\ (\text{effluent flow}/(Qad+\text{effluent flow}))>AC$

Where TU_a effluent is the maximum measured acute toxicity of 100 percent effluent determined pursuant to section D.1.a. of this procedure, B is the multiplying factor taken from Table F6–1 of this procedure to convert the highest measured effluent toxicity value to the estimated 95th percentile toxicity value for the discharge, effluent flow is the same effluent flow used to calculate the preliminary wasteload allocations (WLAs) for individual pollutants to meet the acute criteria and values for those pollutants, AC is the numeric acute WET criterion or numeric interpretation of a narrative criterion established pursuant to section A.1 of this procedure and expressed in TU_a, and Qad is the amount of the receiving water available for dilution calculated using: (i) the specified design flow(s) for tributaries and connecting channels in section C.1.b of this procedure, or where appropriate procedure 3.E.1.e of appendix F, and using EPA-approved State and Tribal procedures for establishing acute mixing zones in tributaries and connecting channels, or (ii) the EPA-approved State and Tribal procedures for establishing acute mixing zones in OWGLs. Where there are less than 10 individual WET tests, the multiplying factor taken from Table F6–1 of this procedure shall be based on a coefficient of variation (CV) or 0.6. Where there are 10 or more individual WET tests, the multiplying factor taken from Table F6–1 shall be based on a CV calculated as the standard deviation of the acute toxicity values found in the WET tests divided by the arithmetic mean of those toxicity values.

3. The WET of an effluent is or may be discharged at a level that will cause, have the reasonable potential to cause, or contribute to an excursion above any numeric chronic WET criterion or numeric interpretation of a narrative criterion within a State's or

Tribe's water quality standards, when effluent-specific information demonstrates that:

(TU_c effluent) (B) (effluent flow/Qad+effluent flow))>CC

Where TU_c effluent is the maximum measured chronic toxicity value of 100 percent effluent determined in accordance with section D.1.b. of this procedure, B is the multiplying factor taken from Table F6–1 of this procedure, effluent flow is the same effluent flow used to calculate the preliminary WLAs for individual pollutants to meet the chronic criteria and values for those pollutants, CC is the numeric chronic WET criterion or numeric interpretation of a narrative criterion established pursuant to section A.2 of this procedure and expressed in TU_c, and Qad is the amount of the receiving water available for dilution calculated using: (i) the design flow(s) for tributaries and connecting channels specified in procedure 3.E.1.a of appendix F, and where appropriate procedure 3.E.1.e of appendix F, and in accordance with the provisions of procedure 3.E.5 for chronic mixing zones, or (ii) procedures 3.D.1 and 3.D.4 for discharges to the OWGLs. Where there are less than 10 individual WET tests, the multiplying factor taken from Table F6–1 of this procedure shall be based on a CV of 0.6. Where there are 10 more individual WET tests, the multiplying factor taken from Table F6–1 of this procedure shall be based on a CV calculated as the standard deviation of the WET tests divided by the arithmetic mean of the WET tests.

TABLE F6–1.—REASONABLE POTENTIAL MULTIPLYING FACTORS: 95% CONFIDENCE LEVEL AND 95% PROBABILITY BASIS

Number of Samples	Coefficient of variation																			
	0.1	0.2	0.3	0.4	0.5	0.6	0.7	0.8	0.9	1.0	1.1	1.2	1.3	1.4	1.5	1.6	1.7	1.8	1.9	2.0
1	1.4	1.9	2.6	3.6	4.7	6.2	8.0	10.1	12.6	15.5	18.7	22.3	26.4	30.8	35.6	40.7	46.2	52.1	58.4	64.9
2	1.3	1.6	2.0	2.5	3.1	3.8	4.6	5.4	6.4	7.4	8.5	9.7	10.9	12.2	13.6	15.0	16.4	17.9	19.5	21.1
3	1.2	1.5	1.8	2.1	2.5	3.0	3.5	4.0	4.6	5.2	5.8	6.5	7.2	7.9	8.6	9.3	10.0	10.8	11.5	12.3
4	1.2	1.4	1.7	1.9	2.2	2.6	2.9	3.3	3.7	4.2	4.6	5.0	5.5	6.0	6.4	6.9	7.4	7.8	8.3	8.8
5	1.2	1.4	1.6	1.8	2.1	2.3	2.6	2.9	3.2	3.6	3.9	4.2	4.5	4.9	5.2	5.6	5.9	6.2	6.6	6.9
6	1.1	1.3	1.5	1.7	1.9	2.1	2.4	2.6	2.9	3.1	3.4	3.7	3.9	4.2	4.5	4.7	5.0	5.2	5.5	5.7
7	1.1	1.3	1.4	1.6	1.8	2.0	2.2	2.4	2.6	2.8	3.1	3.3	3.5	3.7	3.9	4.1	4.3	4.5	4.7	4.9
8	1.1	1.3	1.4	1.6	1.7	1.9	2.1	2.3	2.4	2.6	2.8	3.0	3.2	3.3	3.5	3.7	3.9	4.0	4.2	4.3
9	1.1	1.2	1.4	1.5	1.7	1.8	2.0	2.1	2.3	2.4	2.6	2.8	2.9	3.1	3.2	3.4	3.5	3.6	3.8	3.9
10	1.1	1.2	1.3	1.5	1.6	1.7	1.9	2.0	2.2	2.3	2.4	2.6	2.7	2.8	3.0	3.1	3.2	3.3	3.4	3.6
11	1.1	1.2	1.3	1.4	1.6	1.7	1.8	1.9	2.1	2.2	2.3	2.4	2.5	2.7	2.8	2.9	3.0	3.1	3.2	3.3
12	1.1	1.2	1.3	1.4	1.5	1.6	1.7	1.9	2.0	2.1	2.2	2.3	2.4	2.5	2.6	2.7	2.8	2.9	3.0	3.0
13	1.1	1.2	1.3	1.4	1.5	1.6	1.7	1.8	1.9	2.0	2.1	2.2	2.3	2.4	2.5	2.5	2.6	2.7	2.8	2.9
14	1.1	1.2	1.3	1.4	1.4	1.5	1.6	1.7	1.8	1.9	2.0	2.1	2.2	2.3	2.3	2.4	2.5	2.6	2.6	2.7
15	1.1	1.2	1.2	1.3	1.4	1.5	1.6	1.7	1.8	1.8	1.9	2.0	2.1	2.2	2.2	2.3	2.4	2.4	2.5	2.5
16	1.1	1.1	1.2	1.3	1.4	1.5	1.6	1.6	1.7	1.8	1.9	1.9	2.0	2.1	2.1	2.2	2.3	2.3	2.4	2.4
17	1.1	1.1	1.2	1.3	1.4	1.4	1.5	1.6	1.7	1.7	1.8	1.9	1.9	2.0	2.0	2.1	2.2	2.2	2.3	2.3
18	1.1	1.1	1.2	1.3	1.3	1.4	1.5	1.6	1.6	1.7	1.7	1.8	1.9	1.9	2.0	2.0	2.1	2.1	2.2	2.2
19	1.1	1.1	1.2	1.3	1.3	1.4	1.5	1.5	1.6	1.6	1.7	1.8	1.8	1.9	1.9	2.0	2.0	2.0	2.1	2.1
20	1.1	1.1	1.2	1.2	1.3	1.4	1.4	1.5	1.5	1.6	1.6	1.7	1.7	1.8	1.8	1.9	1.9	2.0	2.0	2.0
30	1.0	1.1	1.1	1.1	1.2	1.2	1.2	1.3	1.3	1.3	1.3	1.4	1.4	1.4	1.4	1.5	1.5	1.5	1.5	1.5
40	1.0	1.0	1.1	1.1	1.1	1.1	1.1	1.1	1.2	1.2	1.2	1.2	1.2	1.2	1.2	1.2	1.2	1.2	1.3	1.3
50	1.0	1.0	1.0	1.0	1.0	1.0	1.0	1.1	1.1	1.1	1.1	1.1	1.1	1.1	1.1	1.1	1.1	1.1	1.1	1.1
60	1.0	1.0	1.0	1.0	1.0	1.0	1.0	1.0	1.0	1.0	1.0	1.0	1.0	1.0	1.0	1.0	1.0	1.0	1.0	1.0
70	1.0	1.0	1.0	1.0	1.0	0.9	0.9	0.9	0.9	0.9	0.9	0.9	0.9	0.9	0.9	0.9	0.9	0.9	0.9	0.9
80	1.0	1.0	1.0	0.9	0.9	0.9	0.9	0.9	0.9	0.9	0.9	0.9	0.9	0.9	0.8	0.8	0.8	0.8	0.8	0.8
90	1.0	1.0	0.9	0.9	0.9	0.9	0.9	0.9	0.9	0.8	0.8	0.8	0.8	0.8	0.8	0.8	0.8	0.8	0.8	0.8
100	1.0	1.0	0.9	0.9	0.9	0.9	0.9	0.8	0.8	0.8	0.8	0.8	0.8	0.8	0.8	0.8	0.8	0.7	0.7	0.7

PROCEDURE 7: LOADING LIMITS

The Great Lakes States and Tribes shall adopt provisions consistent with (as protective as) this procedure.

Whenever a water quality-based effluent limitation (WQBEL) is developed, the WQBEL shall be expressed as both a concentration value and a corresponding mass loading rate.

A. Both mass and concentration limits shall be based on the same permit averaging periods such as daily, weekly, or monthly averages, or in other appropriate permit averaging periods.

B. The mass loading rates shall be calculated using effluent flow rates that are consistent with those used in establishing the WQBELs expressed in concentration.

PROCEDURE 8: WATER QUALITY-BASED EFFLUENT LIMITATIONS BELOW THE QUANTIFICATION LEVEL

The Great Lakes States and Tribes shall adopt provisions consistent with (as protective as) this procedure.

When a water quality-based effluent limitation (WQBEL) for a pollutant is calculated to be less than the quantification level:

A. *Permit Limits.* The permitting authority shall designate as the limit in the NPDES permit the WQBEL exactly as calculated.

B. *Analytical Method and Quantification Level.*

1. The permitting authority shall specify in the permit the most sensitive, applicable, analytical method, specified in or approved under 40 CFR part 136, or other appropriate method if one is not available under 40 CFR part 136, to be used to monitor for the presence and amount in an effluent of the pollutant for which the WQBEL is established; and shall specify in accordance with section B.2 of this procedure, the quantification level that can be achieved by use of the specified analytical method.

2. The quantification level shall be the minimum level (ML) specified in or approved under 40 CFR part 136 for the method for that pollutant. If no such ML exists, or if the method is not specified or approved under 40 CFR part 136, the quantification level shall be the lowest quantifiable level practicable. The permitting authority may specify a higher quantification level if the permittee demonstrates that a higher quantification level is appropriate because of effluent-specific matrix interference.

3. The permit shall state that, for the purpose of compliance assessment, the analytical method specified in the permit shall be used to monitor the amount of pollutant in an effluent down to the quantification level, provided that the analyst has complied with the specified quality assurance/quality control procedures in the relevant method.

4. The permitting authority shall use applicable State and Tribal procedures to average and account for monitoring data. The permitting authority may specify in the permit the value to be used to interpret sample values below the quantification level.

C. *Special Conditions.* The permit shall contain a reopener clause authorizing modification or revocation and reissuance of the permit if new information generated as a result of special conditions included in the permit indicates that presence of the pollutant in the discharge at levels above the WQBEL. Special conditions that may be included in the permit include, but are not limited to, fish tissue sampling, whole effluent toxicity (WET) tests, limits and/or monitoring requirements on internal waste streams, and monitoring for surrogate parameters. Data generated as a result of special conditions can be used to reopen the permit to establish more stringent effluent limits or conditions, if necessary.

D. *Pollutant Minimization Program.* The permitting authority shall include a condition in the permit requiring the permittee to develop and conduct a pollutant minimization program for each pollutant with a WQBEL below the quantification level. The goal of the pollutant minimization program shall be to reduce all potential sources of the pollutant to maintain the effluent at or below the WQBEL. In addition, States and Tribes may consider cost-effectiveness when establishing the requirements of a PMP. The pollutant minimization program shall include, but is not limited to, the following:

1. An annual review and semi-annual monitoring of potential sources of the pollutant, which may include fish tissue monitoring and other bio-uptake sampling;

2. Quarterly monitoring for the pollutant in the influent to the wastewater treatment system;

3. Submittal of a control strategy designed to proceed toward the goal of maintaining all sources of the pollutant to the wastewater collection system below the WQBEL;

4. When the sources of the pollutant are discovered, appropriate cost-effective control measures shall be implemented, consistent with the control strategy; and

5. An annual status report that shall be sent to the permitting authority including:

a. All minimization program monitoring results for the previous year;

b. A list of potential sources of the pollutant; and

c. A summary of all action taken to reduce or eliminate the identified sources of the pollutant.

6. Any information generated as a result of procedure 8.D can be used to support a request for subsequent permit modifications, including revisions to (e.g., more or less frequent monitoring), or removal of the requirements of procedure 8.D, consistent with 40 CFR 122.44, 122.62 and 122.63.

PROCEDURE 9: COMPLIANCE SCHEDULES

The Great Lakes States and Tribes shall adopt provisions consistent with (as protective as) procedure 9 of appendix F of part 132.

A. *Limitations for New Great Lakes Dischargers.* When a permit issued on or after March 23, 1997 to a new Great Lakes discharger (defined in Part 132.2) contains a water quality-based effluent limitation (WQBEL), the permittee shall comply with such a limitation upon the commencement of the discharge.

B. *Limitations for Existing Great Lakes Dischargers.*

1. Any existing permit that is reissued or modified on or after March 23, 1997 to contain a new or more restrictive WQBEL may allow a reasonable period of time, up to five years from the date of permit issuance or modification, for the permittee to comply with that limit, provided that the Tier I criterion or whole effluent toxicity (WET) criterion was adopted (or, in the case of a narrative criterion, Tier II value, or Tier I criterion derived pursuant to the methodology

in appendix A of part 132, was newly derived) after July 1, 1977.

2. When the compliance schedule established under paragraph 1 goes beyond the term of the permit, an interim permit limit effective upon the expiration date shall be included in the permit and addressed in the permit's fact sheet or statement of basis. The administrative record for the permit shall reflect the final limit and its compliance date.

3. If a permit establishes a schedule of compliance under paragraph 1 which exceeds one year from the date of permit issuance or modification, the schedule shall set forth interim requirements and dates for their achievement. The time between such interim dates may not exceed one year. If the time necessary for completion of any interim requirement is more than one year and is not readily divisible into stages for completion, the permit shall require, at a minimum, specified dates for annual submission of progress reports on the status of any interim requirements.

C. *Delayed Effectiveness of Tier II Limitations for Existing Great Lakes Discharges.*

1. Whenever a limit (calculated in accordance with Procedure 3) based upon a Tier II value is included in a reissued or modified permit for an existing Great Lakes discharger, the permit may provide a reasonable period of time, up to two years, in which to provide additional studies necessary to develop a Tier I criterion or to modify the Tier II value. In such cases, the permit shall require compliance with the Tier II limitation within a reasonable period of time, no later than five years after permit issuance or modification, and contain a reopener clause.

2. The reopener clause shall authorize permit modifications if specified studies have been completed by the permittee or provided by a third-party during the time allowed to conduct the specified studies, and the permittee or a third-party demonstrates, through such studies, that a revised limit is appropriate. Such a revised limit shall be incorporated through a permit modification and a reasonable time period, up to five years, shall be allowed for compliance. If incorporated prior to the compliance date of the original Tier II limitation, any such revised limit shall not be considered less-stringent for purposes of the anti-backsliding provisions of section 402(o) of the Clean Water Act.

3. If the specified studies have been completed and do not demonstrate that a revised limit is appropriate, the permitting authority may provide a reasonable additional period of time, not to exceed five years with which to achieve compliance with the original effluent limitation.

4. Where a permit is modified to include new or more stringent limitations, on a date within five years of the permit expiration date, such compliance schedules may extend beyond the term of a permit consistent with section B.2 of this procedure.

5. If future studies (other than those conducted under paragraphs 1, 2, or 3 above) result in a Tier II value being changed to a less stringent Tier II value or Tier I criterion, after the effective date of a Tier II-based limit, the existing Tier II-based limit may be revised to be less stringent if:

(a) It complies with sections 402(o) (2) and (3) of the CWA; or,

(b) In non-attainment waters, where the existing Tier II limit was based on procedure 3, the cumulative effect of revised effluent limitation based on procedure 3 of this appendix will assure compliance with water quality standards; or,

(c) In attained waters, the revised effluent limitation complies with the State or Tribes' antidegradation policy and procedures.

PART 133—SECONDARY TREATMENT REGULATION

Sec.
133.100 Purpose.
133.101 Definitions.
133.102 Secondary treatment.
133.103 Special considerations.
133.104 Sampling and test procedures.
133.105 Treatment equivalent to secondary treatment.

AUTHORITY: Secs. 301(b)(1)(B), 304(d)(1), 304(d)(4), 308, and 501 of the Federal Water Pollution Control Act as amended by the Federal Water Pollution Control Act Amendments of 1972, the Clean Water Act of 1977, and the Municipal Wastewater Treatment Construction Grant Amendments of 1981; 33 U.S.C. 1311(b)(1)(B), 1314(d) (1) and (4), 1318, and 1361; 86 Stat. 816, Pub. L. 92–500; 91 Stat. 1567, Pub. L. 95–217; 95 Stat. 1623, Pub. L. 97–117.

SOURCE: 49 FR 37006, Sept. 20, 1984, unless otherwise noted.

§ 133.100 Purpose.

This part provides information on the level of effluent quality attainable through the application of secondary or equivalent treatment.

§ 133.101 Definitions.

Terms used in this part are defined as follows:

(a) *7-day average.* The arithmetic mean of pollutant parameter values for samples collected in a period of 7 consecutive days.

(b) *30-day average.* The arithmetic mean of pollutant parameter values of

samples collected in a period of 30 consecutive days.

(c) *Act.* The Clean Water Act (33 U.S.C. 1251 *et seq.*, as amended).

(d) *BOD.* The five day measure of the pollutant parameter biochemical oxygen demand (BOD).

(e) *$CBOD_5$.* The five day measure of the pollutant parameter carbonaceous biochemical oxygen demand ($CBOD_5$).

(f) *Effluent concentrations consistently achievable through proper operation and maintenance.* (1) For a given pollutant parameter, the 95th percentile value for the 30-day average effluent quality achieved by a treatment works in a period of at least two years, excluding values attributable to upsets, bypasses, operational errors, or other unusual conditions, and (2) a 7-day average value equal to 1.5 times the value derived under paragraph (f)(1) of this section.

(g) *Facilities eligible for treatment equivalent to secondary treatment.* Treatment works shall be eligible for consideration for effluent limitations described for treatment equivalent to secondary treatment (§ 133.105), if:

(1) The BOD_5 and SS effluent concentrations consistently achievable through proper operation and maintenance (§ 133.101(f)) of the treatment works exceed the minimum level of the effluent quality set forth in §§ 133.102(a) and 133.102(b),

(2) A trickling filter or waste stabilization pond is used as the principal process, and

(3) The treatment works provide significant biological treatment of municipal wastewater.

(h) *mg/l.* Milligrams per liter.

(i) *NPDES.* National Pollutant Discharge Elimination System.

(j) *Percent removal.* A percentage expression of the removal efficiency across a treatment plant for a given pollutant parameter, as determined from the 30-day average values of the raw wastewater influent pollutant concentrations to the facility and the 30-day average values of the effluent pollutant concentrations for a given time period.

(k) *Significant biological treatment.* The use of an aerobic or anaerobic biological treatment process in a treatment works to consistently achieve a 30-day average of a least 65 percent removal of BOD_5.

(l) *SS.* The pollutant parameter total suspended solids.

(m) *Significantly more stringent limitation* means BOD_5 and SS limitations necessary to meet the percent removal requirements of at least 5 mg/l more stringent than the otherwise applicable concentration-based limitations (e.g., less than 25 mg/l in the case of the secondary treatment limits for BOD_5 and SS), or the percent removal limitations in §§ 133.102 and 133.105, if such limits would, by themselves, force significant construction or other significant capital expenditure.

(n) *State Director* means the chief administrative officer of any State or interstate agency operating an ''approved program,'' or the delegated representative of the State Director.

[49 FR 37006, Sept. 20, 1984; 49 FR 40405, Oct. 16, 1984, as amended at 50 FR 23387, June 3, 1985]

§ 133.102 Secondary treatment.

The following paragraphs describe the minimum level of effluent quality attainable by secondary treatment in terms of the parameters—BOD_5, SS and pH. All requirements for each parameter shall be achieved except as provided for in §§ 133.103 and 133.105.

(a) *BOD_5.*

(1) The 30-day average shall not exceed 30 mg/l.

(2) The 7-day average shall not exceed 45 mg/l.

(3) The 30-day average percent removal shall not be less than 85 percent.

(4) At the option of the NPDES permitting authority, in lieu of the parameter BOD_5 and the levels of the effluent quality specified in paragraphs (a)(1), (a)(2) and (a)(3), the parameter $CBOD_5$ may be substituted with the following levels of the $CBOD_5$ effluent quality provided:

(i) The 30-day average shall not exceed 25 mg/l.

(ii) The 7-day average shall not exceed 40 mg/l.

(iii) The 30-day average percent removal shall not be less than 85 percent.

(b) *SS.* (1) The 30-day average shall not exceed 30 mg/l.

(2) The 7-day average shall not exceed 45 mg/l.

(3) The 30-day average percent removal shall not be less than 85 percent.

(c) *pH.* The effluent values for pH shall be maintained within the limits of 6.0 to 9.0 unless the publicly owned treatment works demonstrates that: (1) Inorganic chemicals are not added to the waste stream as part of the treatment process; and (2) contributions from industrial sources do not cause the pH of the effluent to be less than 6.0 or greater than 9.0.

[49 FR 37006, Sept. 20, 1984; 49 FR 40405, Oct. 16, 1984]

§ 133.103 Special considerations.

(a) *Combined sewers.* Treatment works subject to this part may not be capable of meeting the percentage removal requirements established under §§ 133.102(a)(3) and 133.102(b)(3), or §§ 133.105(a)(3) and 133.105(b)(3) during wet weather where the treatment works receive flows from combined sewers (*i.e.,* sewers which are designed to transport both storm water and sanitary sewage). For such treatment works, the decision must be made on a case-by-case basis as to whether any attainable percentage removal level can be defined, and if so, what the level should be.

(b) *Industrial wastes.* For certain industrial categories, the discharge to navigable waters of BOD_5 and SS permitted under sections 301(b)(1)(A)(i), (b)(2)(E) or 306 of the Act may be less stringent than the values given in §§ 133.102(a)(1), 133.102(a)(4)(i), 133.102(b)(1), 133.105(a)(1), 133.105(b)(1) and 133.105(e)(1)(i). In cases when wastes would be introduced from such an industrial category into a publicly owned treatment works, the values for BOD_5 and SS in §§ 133.102(a)(1), 133.102(a)(4)(i), 133.102(b)(1), 133.105(a)(1), 133.105(b)(1), and 133.105(e)(1)(i) may be adjusted upwards provided that: (1) The permitted discharge of such pollutants, attributable to the industrial category, would not be greater than that which would be permitted under sections 301(b)(1)(A)(i), 301(b)(2)(E) or 306 of the Act if such industrial category were to discharge directly into the navigable waters, and (2) the flow or loading of such pollutants introduced by the industrial category exceeds 10 percent of the design flow or loading of the publicly owned treatment works. When such an adjustment is made, the values for BOD_5 or SS in §§ 133.102(a)(2), 133.102(a)(4)(ii), § 133.102(b)(2), 133.105(a)(2), 133.105(b)(2), and 133.105(e)(1)(ii) should be adjusted proportionately.

(c) *Waste stabilization ponds.* The Regional Administrator, or, if appropriate, State Director subject to EPA approval, is authorized to adjust the minimum levels of effluent quality set forth in § 133.105 (b)(1), (b)(2), and (b)(3) for treatment works subject to this part, to conform to the SS concentrations achievable with waste stabilization ponds, provided that: (1) Waste stablization ponds are the principal process used for secondary treatment; and (2) operation and maintenance data indicate that the SS values specified in § 133.105 (b)(1), (b)(2), and (b)(3) cannot be achieved. The term ''SS concentrations achievable with waste stabilization ponds'' means a SS value, determined by the Regional Administrator, or, if appropriate, State Director subject to EPA approval, which is equal to the effluent concentration achieved 90 percent of the time within a State or appropriate contiguous geographical area by waste stabilization ponds that are achieving the levels of effluent quality for BOD_5 specified in § 133.105(a)(1). [cf. 43 FR 55279].

(d) *Less concentrated influent wastewater for separate sewers.* The Regional Administrator or, if appropriate, State Director is authorized to substitute either a lower percent removal requirement or a mass loading limit for the percent removal requirements set forth in §§ 133.102(a)(3), 133.102(a)(4)(iii), 133.102(b)(3), 102.105(a)(3), 133.105(b)(3) and 133.105(e)(1)(iii) provided that the permittee satisfactorily demonstrates that: (1) The treatment works is consistently meeting, or will consistently meet, its permit effluent concentration limits but its percent removal requirements cannot be met due to less concentrated influent wastewater, (2) to meet the percent removal requirements, the treatment works would have to achieve significantly more

stringent limitations than would otherwise be required by the concentration-based standards, and (3) the less concentrated influent wastewater is not the result of excessive I/I. The determination of whether the less concentrated wastewater is the result of excessive I/I will use the definition of excessive I/I in 40 CFR 35.2005(b)(16) plus the additional criterion that inflow is nonexcessive if the total flow to the POTW (i.e., wastewater plus inflow plus infiltration) is less than 275 gallons per capita per day.

(e) Less concentrated influent wastewater for combined sewers during dry weather. The Regional Administrator or, if appropriate, the State Director is authorized to substitute either a lower percent removal requirement or a mass loading limit for the percent removal requirements set forth in §§ 133.102(a)(3), 133.102(a)(4)(iii), 133.102(b)(3), 133.105(a)(3), 133.105(b)(3) and 133.105(e)(1)(iii) provided that the permittee satisfactorily demonstrates that: (1) The treatment works is consistently meeting, or will consistently meet, its permit effluent concentration limits, but the percent removal requirements cannot be met due to less concentrated influent wastewater; (2) to meet the percent removal requirements, the treatment works would have to achieve significantly more stringent effluent concentrations than would otherwise be required by the concentration-based standards; and (3) the less concentrated influent wastewater does not result from either excessive infiltration or clear water industrial discharges during dry weather periods. The determination of whether the less concentrated wastewater results from excessive infiltration is discussed in 40 CFR 35.2005(b)(28), plus the additional criterion that either 40 gallons per capita per day (gpcd) or 1500 gallons per inch diameter per mile of sewer (gpdim) may be used as the threshold value for that portion of the dry weather base flow attributed to infiltration. If the less concentrated influent wastewater is the result of clear water industrial discharges, then the treatment works must control such discharges pursuant to 40 CFR part 403.

[49 FR 37006, Sept. 20, 1984, as amended at 50 FR 23387, June 3, 1985; 50 FR 36880, Sept. 10, 1985; 54 FR 4228, Jan. 27, 1989]

§ 133.104 Sampling and test procedures.

(a) Sampling and test procedures for pollutants listed in this part shall be in accordance with guidelines promulgated by the Administrator in 40 CFR part 136.

(b) Chemical oxygen demand (COD) or total organic carbon (TOC) may be substituted for BOD_5 when a long-term BOD:COD or BOD:TOC correlation has been demonstrated.

§ 133.105 Treatment equivalent to secondary treatment.

This section describes the minimum level of effluent quality attainable by facilities eligible for treatment equivalent to secondary treatment (§ 133.101(g)) in terms of the parameters—BOD_5, SS and pH. All requirements for the specified parameters in paragraphs (a), (b) and (c) of this section shall be achieved except as provided for in § 133.103, or paragraphs (d), (e) or (f) of this section.

(a) *BOD_5*. (1) The 30-day average shall not exceed 45 mg/l.

(2) The 7-day average shall not exceed 65 mg/l.

(3) The 30-day average percent removal shall not be less than 65 percent.

(b) *SS*. Except where SS values have been adjusted in accordance with § 133.103(c):

(1) The 30-day average shall not exceed 45 mg/l.

(2) The 7-day average shall not exceed 65 mg/l.

(3) The 30-day average percent removal shall not be less than 65 percent.

(c) *pH*. The requirements of § 133.102(c) shall be met.

(d) *Alternative State requirements*. Except as limited by paragraph (f) of this section, and after notice and opportunity for public comment, the Regional Administrator, or, if appropriate, State Director subject to EPA approval, is authorized to adjust the minimum levels of effluent quality set forth in paragraphs (a)(1), (a)(2), (b)(1)

and (b)(2) of this section for trickling filter facilities and in paragraphs (a)(1) and (a)(2) of this section for waste stabilization pond facilities, to conform to the BOD_5 and SS effluent concentrations consistently achievable through proper operation and maintenance (§ 133.101(f)) by the median (50th percentile) facility in a representative sample of facilities within a State or appropriate contiguous geographical area that meet the definition of facilities eligible for treatment equivalent to secondary treatment (§ 133.101(g)).

(The information collection requirements contained in this rule have been approved by OMB and assigned control number 2040–0051.)

(e) *$CBOD_5$* limitations:

(1) Where data are available to establish $CBOD_5$ limitations for a treatment works subject to this section, the NPDES permitting authority may substitute the parameter $CBOD_5$ for the parameter BOD_5 In §§ 133.105(a)(1), 133.105(a)(2) and 133.105(a)(3), on a case-by-case basis provided that the levels of $CBOD_5$ effluent quality are not less stringent than the following:

(i) The 30-day average shall not exceed 40 mg/l.

(ii) The 7-days average shall not exceed 60 mg/l.

(iii) The 30-day average percent removal shall not be less than 65 percent.

(2) Where data are available, the parameter $CBOD_5$ may be used for effluent quality limitations established under paragraph (d) of this section. Where concurrent BOD effluent data are available, they must be submitted with the CBOD data as a part of the approval process outlined in paragraph (d) of this section.

(f) *Permit adjustments.* Any permit adjustment made pursuant to this part may not be any less stringent than the limitations required pursuant to § 133.105(a)–(e). Furthermore, permitting authorities shall require more stringent limitations when adjusting permits if: (1) For existing facilities the permitting authority determines that the 30-day average and 7-day average BOD_5 and SS effluent values that could be achievable through proper operation and maintenance of the treatment works, based on an analysis of the past performance of the treatment works, would enable the treatment works to achieve more stringent limitations, or

(2) For new facilities, the permitting authority determines that the 30-day average and 7-day average BOD_5 and SS effluent values that could be achievable through proper operation and maintenance of the treatment works, considering the design capability of the treatment process and geographical and climatic conditions, would enable the treatment works to achieve more stringent limitations.

[49 FR 37006, Sept. 20, 1984; 49 FR 40405, Oct. 16, 1984]

PART 135—PRIOR NOTICE OF CITIZEN SUITS

Subpart A—Prior Notice Under the Clean Water Act

Sec.
135.1 Purpose.
135.2 Service of notice.
135.3 Contents of notice.
135.4 Service of complaint.
135.5 Service of proposed consent judgment.

Subpart B—Prior Notice Under the Safe Drinking Water Act

135.10 Purpose.
135.11 Service of notice.
135.12 Contents of notice.
135.13 Timing of notice.

AUTHORITY: Subpart A, issued under Sec. 505, Clean Water Act, as amended 1987; Sec. 504, Pub. L. 100–4; 101 Stat. 7 (33 U.S.C. 1365). Subpart B, issued under Sec. 1449, Safe Drinking Water Act (42 U.S.C. 300j–8).

SOURCE: 38 FR 15040, June 7, 1973, unless otherwise noted.

Subpart A—Prior Notice Under the Clean Water Act

§ 135.1 Purpose.

(a) Section 505(a)(1) of the Clean Water Act (hereinafter the Act) authorizes any person or persons having an interest which is or may be adversely affected to commence a civil action on his own behalf to enforce the Act or to enforce certain requirements promulgated pursuant to the Act. In addition, section 505(c)(3) of the Act provides that, for purposes of protecting the interests of the United States, whenever a citizen enforcement action

is brought under section 505(a)(1) of the Act in a court of the United States, the Plaintiff shall serve a copy of the complaint on the Attorney General and the Administrator. Section 505(c)(3) also provides that no consent judgment shall be entered in any citizen action in which the United States is not a party prior to 45 days following the receipt of a copy of the proposed consent judgment by the Attorney General and the Administrator.

(b) The purpose of this subpart is to prescribe procedures governing the giving of notice required by section 505(b) of the Act as a prerequisite to the commencing of such actions, and governing the service of complaints and proposed consent judgments as required by section 505(c)(3) of the Act.

[56 FR 11515, Mar. 19, 1991]

§ 135.2 Service of notice.

(a) Notice of intent to file suit pursuant to section 505(a)(1) of the Act shall be served upon an alleged violator of an effluent standard or limitation under the Act, or an order issued by the Administrator or a State with respect to such a standard or limitation, in the following manner:

(1) If the alleged violator is an individual or corporation, service of notice shall be accomplished by certified mail addressed to, or by personal service upon, the owner or managing agent of the building, plant, installation, vessel, facility, or activity alleged to be in violation. A copy of the notice shall be mailed to the Administrator of the Environmental Protection Agency, the Regional Administrator of the Environmental Protection Agency for the region in which such violation is alleged to have occurred, and the chief administrative officer of the water pollution control agency for the State in which the violation is alleged to have occurred. If the alleged violator is a corporation, a copy of such notice also shall be mailed to the registered agent, if any, of such corporation in the State in which such violation is alleged to have occurred.

(2) If the alleged violator is a State or local agency, service of notice shall be accomplished by certified mail addressed to, or by personal service upon, the head of such agency. A copy of such notice shall be mailed to the chief administrative officer of the water pollution control agency for the State in which the violation is alleged to have occurred, the Administrator of the Environmental Protection Agency, and the Regional Administrator of the Environmental Protection Agency for the region in which such violation is alleged to have occurred.

(3) If the alleged violator is a Federal agency, service of notice shall be accomplished by certified mail addressed to, or by personal service upon, the head of such agency. A copy of such notice shall be mailed to the Administrator of the Environmental Protection Agency, the Regional Administrator of the Environmental Protection Agency for the region in which such violation is alleged to have occurred, the Attorney General of the United States, and the Chief administrative officer of the water pollution control agency for the State in which the violation is alleged to have occurred.

(b) Service of notice of intent to file suit pursuant to section 505(a)(2) of the Act shall be accomplished by certified mail addressed to, or by personal service upon, the Administrator, Environmental Protection Agency, Washington, DC, 20460. A copy of such notice shall be mailed to the Attorney General of the United States.

(c) Notice given in accordance with the provisions of this subpart shall be deemed to have been served on the postmark date if mailed, or on the date of receipt if served personally.

§ 135.3 Contents of notice.

(a) *Violation of standard, limitation or order.* Notice regarding an alleged violation of an effluent standard or limitation or of an order with respect thereto, shall include sufficient information to permit the recipient to identify the specific standard, limitation, or order alleged to have been violated, the activity alleged to constitute a violation, the person or persons responsible for the alleged violation, the location of the alleged violation, the date or dates of such violation, and the full name, address, and telephone number of the person giving notice.

(b) *Failure to act.* Notice regarding an alleged failure of the Administrator to

perform any act or duty under the Act which is not discretionary with the Administrator shall identify the provision of the Act which requires such act or creates such duty, shall describe with reasonable specificity the action taken or not taken by the Administrator which is alleged to constitute a failure to perform such act or duty, and shall state the full name, address and telephone number of the person giving the notice.

(c) *Identification of counsel.* The notice shall state the name, address, and telephone number of the legal counsel, if any, representing the person giving the notice.

§ 135.4 Service of complaint.

(a) A citizen plaintiff shall mail a copy of a complaint filed against an alleged violator under section 505(a)(1) of the Act to the Administrator of the Environmental Protection Agency, the Regional Administrator of the EPA Region in which the violations are alleged to have occurred, and the Attorney General of the United States.

(b) The copy so served shall be of a filed, date-stamped complaint, or shall be a conformed copy of the filed complaint which indicates the assigned civil action number, accompanied by a signed statement by the plaintiff or his attorney as to when the complaint was filed.

(c) A citizen plaintiff shall mail a copy of the complaint on the same date on which the plaintiff files the complaint with the court, or as expeditiously thereafter as practicable.

(d) If the alleged violator is a Federal agency, a citizen plaintiff must serve the complaint on the United States in accordance with relevant Federal law and court rules affecting service on defendants, in addition to complying with the service requirements of this subpart.

[56 FR 11515, Mar. 19, 1991]

§ 135.5 Service of proposed consent judgment.

(a) The citizen plaintiff in a citizen enforcement suit filed against an alleged violator under section 505(a)(1) of the Act shall serve a copy of a proposed consent judgment, signed by all parties to the lawsuit, upon the Administrator, Environmental Protection Agency, Washington, DC 20460, and the Attorney General, Department of Justice, Citizen Suit Coordinator, Room 2615, Washington, DC 20530. The plaintiff shall serve the Administrator and the Attorney General by personal service or by certified mail (return receipt requested.) The plaintiff shall also mail a copy of a proposed consent judgment at the same time to the Regional Administrator of the EPA Region in which the violations were alleged to have occurred.

(b) When the parties in an action in which the United States is not a party file or lodge a proposed consent judgment with the court, the plaintiff shall notify the court of the statutory requirement that the consent judgment shall not be entered prior to 45 days following receipt by both the Administrator and the Attorney General of a copy of the consent judgment.

(1) If the plaintiff knows the dates upon which the Administrator and the Attorney General received copies of the proposed consent judgment, the plaintiff shall so notify the court.

(2) If the plaintiff does not know the date upon which the Administrator and Attorney General received copies of the proposed consent judgment, the plaintiff shall so notify the court, but upon receiving such information regarding the dates of service of the proposed consent judgment upon the Administrator and Attorney General, the plaintiff shall so notify the court of the dates of service.

[56 FR 11515, Mar. 19, 1991]

Subpart B—Prior Notice Under the Safe Drinking Water Act

SOURCE: 54 FR 20771, May 12, 1989, unless otherwise noted.

§ 135.10 Purpose.

Section 1449 of the Safe Drinking Water Act (the Act) authorizes any person to commence a civil action to enforce the Act against an alleged violator of any requirements prescribed by or under the Act, or against the Administrator for failure to perform any duty which is not discretionary under

the Act. No citizen suit may be commenced prior to sixty days after giving notice of the alleged violation to the Administrator, any alleged violator, and to the State. The purpose of this subpart is to prescribe procedures for giving the notice required by section 1449(b).

§ 135.11 Service of notice.

(a) Notice of intent to file suit pursuant to section 1449(a)(1) of the Act shall be served in the following manner upon an alleged violator of any requirement prescribed by or under the Act:

(1) If the alleged violator is an individual or corporation, service of notice shall be accomplished by certified mail, return receipt requested, addressed to, or by personal service upon, such individual or corporation. If a public water system or underground injection well is alleged to be in violation, service shall be upon the owner or operator. A copy of the notice shall be sent by certified mail, return receipt requested, to the Administrator of the Environmental Protection Agency, the Regional Administrator of the Environmental Protection Agency for the region in which such violation is alleged to have occurred, the chief administrative officer of the responsible state agency (if any), and the Attorney General for the State in which the violation is alleged to have occurred. If the alleged violator is a corporation, a copy of the notice shall also be sent by certified mail, return receipt requested, to the registered agent (if any) of the corporation in the State in which the violation is alleged to have occurred.

(2) If the alleged violator is a State or local agency, service of notice shall be accomplished by certified mail, return receipt requested, addressed to, or by personal service upon, the head of such agency. A copy of the notice shall be sent by certified mail, return receipt requested, to the Administrator of the Environmental Protection Agency, the Regional Administrator of the Environmental Protection Agency for the region in which the violation is alleged to have occurred, the chief administrative officer of the responsible state agency (if any), and the Attorney General for the State in which the violation is alleged to have occurred.

(3) If the alleged violator is a Federal agency, service of notice shall be accomplished by certified mail, return receipt requested, addressed to, or by personal service upon, the head of the Federal agency. A copy of the notice shall be sent by certified mail, return receipt requested, to the Administrator of the Environmental Protection Agency, the Regional Administrator of the Environmental Protection Agency for the region in which the violation is alleged to have occurred, the Attorney General of the United States, the chief administrative officer of the responsible state agency (if any), and the Attorney General for the State in which the violation is alleged to have occurred.

(b) Service of notice of intent to file suit pursuant to section 1449(a)(2) of the Act shall be accomplished by certified mail, return receipt requested, addressed to, or by personal service upon, the Administrator of the Environmental Protection Agency, Washington, DC 20460. A copy of the notice shall be sent by certified mail to the Attorney General of the United States.

(c) Notice given in accordance with the provisions of this subpart shall be deemed to have been given on the date of receipt of service, if served personally. If service was accomplished by mail, the date of receipt will be considered to be the date noted on the return receipt card.

§ 135.12 Contents of notice.

(a) *Violation of standard or requirement.* Notice regarding an alleged violation of any requirement prescribed by or under the Act shall include sufficient information to permit the recipient to identify the specific requirement alleged to have been violated, the activity alleged to constitute a violation, the person or persons responsible for the alleged violation, the location of the alleged violation, the date or dates of the alleged violation, and the full name, address, and telephone number of the person giving notice.

(b) *Failure to act.* Notice regarding an alleged failure of the Administrator to perform any act or duty under the Act

which is not discretionary with the Administrator shall identify the provision of the Act which requires the act or creates the duty, and shall describe with reasonable specificity the action taken or not taken by the Administrator which is alleged to constitute a failure to perform such act or duty, and shall state the full name, address, and telephone number of the person giving notice.

(c) *Identification of counsel.* All notices shall include the name, address, and telephone number of the legal counsel, if any, representing the person giving notice.

§ 135.13 Timing of notice.

No action may be commenced under section 1449(a)(1) or (a)(2) until the plaintiff has given each of the appropriate parties sixty days notice of intent to file such an action. Actions concerning injection wells disposing of hazardous waste which allege jurisdiction solely under section 7002(c) of the Resource Conservation and Recovery Act may proceed immediately after notice to the appropriate parties.

FINDING AIDS

A list of CFR titles, subtitles, chapters, subchapters and parts and an alphabetical list of agencies publishing in the CFR are included in the CFR Index and Finding Aids volume to the Code of Federal Regulations which is published separately and revised annually.

Material Approved for Incorporation by Reference
Table of CFR Titles and Chapters
Alphabetical List of Agencies Appearing in the CFR
Table of OMB Control Numbers
List of CFR Sections Affected

Material Approved for Incorporation by Reference

(Revised as of July 1, 1997)

The Director of the Federal Register has approved under 5 U.S.C. 552(a) and 1 CFR Part 51 the incorporation by reference of the following publications. This list contains only those incorporations by reference effective as of the revision date of this volume. Incorporations by reference found within a regulation are effective upon the effective date of that regulation. For more information on incorporation by reference, see the preliminary pages of this volume.

40 CFR, CHAPTER I (PARTS 87 TO 135)
ENVIRONMENTAL PROTECTION AGENCY

	40 CFR
American Society for Testing and Materials 1916 Race Street, Philadelphia, PA 19103	
ASTM D 86–90, Standard Test Method for Distillation of Petroleum Products.	89.6
ASTM D 86–93 Standard Test Method for Distillation of Petroleum Products.	Appendix A to Subpart D, Table 3
ASTM D 93–90, Standard Test Methods for Flash Point by Pensky-Martens Closed Tester.	89.6; Appendix A to Subpart D
ASTM D 129–91, Standard Test Method for Sulfur in Petroleum Products (General Bomb Method).	89.6; Appendix A to Subpart D
ASTM D 287–92, Standard Test Method for API Gravity of Crude Petroleum and Petroleum Products (Hydrometer Method).	89.6; Appendix A to Subpart DASTM D 323–90, Standard Test Method for Vapor Pressure of Petroleum Products (Reid Method) Appendix A to Subpart D
ASTM D 445–88, Standard Test Method for Kinematic Viscosity of Transparent and Opaque Liquids (And the Calculation of Dynamic Viscosity).	89.6; Appendix A to Subpart D
ASTM D 613–86, Standard Test Method for Ignition Quality of Diesel Fuels by the Cetane Method.	89.6; Appendix A to Subpart D
ASTM D 1319–89, Standard Test Method for Hydrocarbon Types in Liquid Petroleum Products by Fluorescent Indicator Adsorption.	89.6; Appendix A to Subpart D, Table 3
ASTM D 1319–93, Standard Test Method for Hydrocarbon Types in Liquid Petroleum Products by Fluorescent Indicator Adsorption.	Appendix A to Subpart D
ASTM D 2622–92, Standard Test Method for Sulfur in Petroleum Products by X-ray Spectrometry.	89.6; Appendix A to Subpart D, Table 3
ASTM D 2699–92 Standard Test Method for Knock Characteristics of Motor Fuels by the Method Research.	Appendix A of Subpart D, Table 3

40 CFR, CHAPTER I (PARTS 87 TO 135)—Continued
ENVIRONMENTAL PROTECTION AGENCY—Continued

	40 CFR
ASTM D 2700–92 Standard Test Method for Knock Characteristics of Motor and Aviation Fuels by the Motor Method.	Appendix A to Subpart D, Table 3
ASTM D 3231–89 Standard Test Method for Phosphorus in Gasoline	Appendix A to Subpart D, Table 3
ASTM D 3606–92 Standard Test Method for Determination of Benzene and Toluene in Finished Motor and Aviation Gasoline by Gas Chromatography.	Appendix A to Subpart D, Table 3
ASTM D 5191–93a Standard Test Method for Vapor Pressure of Petroleum Products (Mini Method).	Appendix A to Subpart D, Table 3
ASTM E 29–93a Standard Practice for Using Significant Digits in Test Data to Determine Conformance with Specifications.	90.116; 90.509; 91.120; 91.207; 91.509; 91.1307
ASTM E29–90, Standard Practice for Using Significant Digits in Test Data to Determine Conformance with Specifications.	89.6; 89.207–96; 89.509–96
California State Regulations	
California Air Resources Board, Haagen-Smit Laboratory, 9528 Telstar Avenue, El Monte, CA 91731–2990	
California Air Resources Board Resolution 92–2, California Regulations for New 1996 and Later Heavy-Duty Off-Road Diesel Cycle Engines.	89.6; 89.112–96; 89.119–96; 89.508–96
Environmental Protection Agenvy	
OAR, 401 M St. SW., Washington	
California Regulatory Requirements Applicable to the Clean Fuel Fleet and California Pilot Programs, April 1, 1990.	88.104–94
International Civil Aviation Organization	
PO Box 400, Succurale: Place de L'Aviation International, 1000 Sherbrooke Street West, Montreal, Quebec, Canada H3A2R2	
ICAO Annex 16, Volume II, Aircraft Engine Emissions (June 1981)	87.64; 87.82
ICAO Annex 16, Volume II, Aircraft Engine Emissions (Second Ed. 1993), Appendix 2.	87.82
ICAO Annex 16, Volume II, Aircraft Engine Emissions (Second Ed. 1993), Appendixes 3 and 5.	87.64
ICAO Annex 16, Volume II, Aircraft Engine Emissions (Second Ed. 1993), Appendix 6.	87.71; 87.89
Society of Automotive Engineers	
400 Commonwealth Dr. Warrendale, PA 15096-0001	
SAE J244, June 83, Recommended Practice for Measurement of Intake Air or Exhaust Gas Flow of Diesel Engines.	89.6; 89.416–96
SAE J1228/ISO 8665, Small Craft-Marine Propulsion Engine and Systems-Power Measurements and Declarations, November 1991.	91.104; 91.115; 91.118; 91.207; 91.1307
SAE J1930, September 1991, Electrical/Electronic Systems Diagnostic Terms, Definitions, Abbreviations, and Acronyms.	90.114; 91.113
SAE J1937, November 89, Recommended Practice for Engine Testing with Low Temperature Charge Air Cooler Systems in a Dynamometer Test Cell.	89.6; 89.327–96
SAE Paper 770141, Optimization of a Flame Ionization Detector for Determination of Hydrocarbon in Diluted Automotive Exhausts, Glenn D. Reschke, 1977.	89.6; 89.319–96; 90.316; 91.316

Table of CFR Titles and Chapters

(Revised as of June 20, 1997)

Title 1—General Provisions

I Administrative Committee of the Federal Register (Parts 1—49)
II Office of the Federal Register (Parts 50—299)
IV Miscellaneous Agencies (Parts 400—500)

Title 2—[Reserved]

Title 3—The President

I Executive Office of the President (Parts 100—199)

Title 4—Accounts

I General Accounting Office (Parts 1—99)
II Federal Claims Collection Standards (General Accounting Office—Department of Justice) (Parts 100—299)

Title 5—Administrative Personnel

I Office of Personnel Management (Parts 1—1199)
II Merit Systems Protection Board (Parts 1200—1299)
III Office of Management and Budget (Parts 1300—1399)
IV Advisory Committee on Federal Pay (Parts 1400—1499)
V The International Organizations Employees Loyalty Board (Parts 1500—1599)
VI Federal Retirement Thrift Investment Board (Parts 1600—1699)
VII Advisory Commission on Intergovernmental Relations (Parts 1700—1799)
VIII Office of Special Counsel (Parts 1800—1899)
IX Appalachian Regional Commission (Parts 1900—1999)
XI Armed Forces Retirement Home (Part 2100)
XIV Federal Labor Relations Authority, General Counsel of the Federal Labor Relations Authority and Federal Service Impasses Panel (Parts 2400—2499)
XV Office of Administration, Executive Office of the President (Parts 2500—2599)
XVI Office of Government Ethics (Parts 2600—2699)
XXI Department of the Treasury (Parts 3100—3199)
XXII Federal Deposit Insurance Corporation (Part 3201)
XXIII Department of Energy (Part 3301)

Title 5—Administrative Personnel—Continued

Chap.	
XXIV	Federal Energy Regulatory Commission (Part 3401)
XXVI	Department of Defense (Part 3601)
XXVIII	Department of Justice (Part 3801)
XXIX	Federal Communications Commission (Parts 3900—3999)
XXX	Farm Credit System Insurance Corporation (Parts 4000—4099)
XXXI	Farm Credit Administration (Parts 4100—4199)
XXXIII	Overseas Private Investment Corporation (Part 4301)
XXXV	Office of Personnel Management (Part 4501)
XL	Interstate Commerce Commission (Part 5001)
XLI	Commodity Futures Trading Commission (Part 5101)
XLII	Department of Labor (Part 5201)
XLIII	National Science Foundation (Part 5301)
XLV	Department of Health and Human Services (Part 5501)
XLVI	Postal Rate Commission (Part 5601)
XLVII	Federal Trade Commission (Part 5701)
XLVIII	Nuclear Regulatory Commission (Part 5801)
L	Department of Transportation (Part 6001)
LII	Export-Import Bank of the United States (Part 6201)
LIII	Department of Education (Parts 6300—6399)
LIV	Environmental Protection Agency (Part 6401)
LVII	General Services Administration (Part 6701)
LVIII	Board of Governors of the Federal Reserve System (Part 6801)
LIX	National Aeronautics and Space Administration (Part 6901)
LX	United States Postal Service (Part 7001)
LXI	National Labor Relations Board (Part 7101)
LXII	Equal Employment Opportunity Commission (Part 7201)
LXIII	Inter-American Foundation (Part 7301)
LXV	Department of Housing and Urban Development (Part 7501)
LXVI	National Archives and Records Administration (Part 7601)
LXIX	Tennessee Valley Authority (Part 7901)
LXXI	Consumer Product Safety Commission (Part 8101)
LXXIV	Federal Mine Safety and Health Review Commission (Part 8401)
LXXVI	Federal Retirement Thrift Investment Board (Part 8601)
LXXVII	Office of Management and Budget (Part 8701)

Title 6—[Reserved]

Title 7—Agriculture

SUBTITLE A—Office of the Secretary of Agriculture (Parts 0—26)

SUBTITLE B—Regulations of the Department of Agriculture

I Agricultural Marketing Service (Standards, Inspections, Marketing Practices), Department of Agriculture (Parts 27—209)

II Food and Consumer Service, Department of Agriculture (Parts 210—299)

Title 7—Agriculture—Continued

Chap.	
III	Animal and Plant Health Inspection Service, Department of Agriculture (Parts 300—399)
IV	Federal Crop Insurance Corporation, Department of Agriculture (Parts 400—499)
V	Agricultural Research Service, Department of Agriculture (Parts 500—599)
VI	Natural Resources Conservation Service, Department of Agriculture (Parts 600—699)
VII	Farm Service Agency, Department of Agriculture (Parts 700—799)
VIII	Grain Inspection, Packers and Stockyards Administration (Federal Grain Inspection Service), Department of Agriculture (Parts 800—899)
IX	Agricultural Marketing Service (Marketing Agreements and Orders; Fruits, Vegetables, Nuts), Department of Agriculture (Parts 900—999)
X	Agricultural Marketing Service (Marketing Agreements and Orders; Milk), Department of Agriculture (Parts 1000—1199)
XI	Agricultural Marketing Service (Marketing Agreements and Orders; Miscellaneous Commodities), Department of Agriculture (Parts 1200—1299)
XIII	Northeast Dairy Compact Commission (Parts 1300—1399)
XIV	Commodity Credit Corporation, Department of Agriculture (Parts 1400—1499)
XV	Foreign Agricultural Service, Department of Agriculture (Parts 1500—1599)
XVI	Rural Telephone Bank, Department of Agriculture (Parts 1600—1699)
XVII	Rural Utilities Service, Department of Agriculture (Parts 1700—1799)
XVIII	Rural Housing Service, Rural Business-Cooperative Service, Rural Utilities Service, and Farm Service Agency, Department of Agriculture (Parts 1800—2099)
XXVI	Office of Inspector General, Department of Agriculture (Parts 2600—2699)
XXVII	Office of Information Resources Management, Department of Agriculture (Parts 2700—2799)
XXVIII	Office of Operations, Department of Agriculture (Parts 2800—2899)
XXIX	Office of Energy, Department of Agriculture (Parts 2900—2999)
XXX	Office of Finance and Management, Department of Agriculture (Parts 3000—3099)
XXXI	Office of Environmental Quality, Department of Agriculture (Parts 3100—3199)
XXXII	[Reserved]
XXXIII	Office of Transportation, Department of Agriculture (Parts 3300—3399)
XXXIV	Cooperative State Research, Education, and Extension Service, Department of Agriculture (Parts 3400—3499)

Title 7—Agriculture—Continued

Chap.

XXXV Rural Housing Service, Department of Agriculture (Parts 3500—3599)

XXXVI National Agricultural Statistics Service, Department of Agriculture (Parts 3600—3699)

XXXVII Economic Research Service, Department of Agriculture (Parts 3700—3799)

XXXVIII World Agricultural Outlook Board, Department of Agriculture (Parts 3800—3899)

XLI [Reserved]

XLII Rural Business-Cooperative Service and Rural Utilities Service, Department of Agriculture (Parts 4200—4299)

Title 8—Aliens and Nationality

I Immigration and Naturalization Service, Department of Justice (Parts 1—499)

Title 9—Animals and Animal Products

I Animal and Plant Health Inspection Service, Department of Agriculture (Parts 1—199)

II Grain Inspection, Packers and Stockyards Administration (Packers and Stockyards Programs), Department of Agriculture (Parts 200—299)

III Food Safety and Inspection Service, Meat and Poultry Inspection, Department of Agriculture (Parts 300—599)

Title 10—Energy

I Nuclear Regulatory Commission (Parts 0—199)

II Department of Energy (Parts 200—699)

III Department of Energy (Parts 700—999)

X Department of Energy (General Provisions) (Parts 1000—1099)

XI United States Enrichment Corporation (Parts 1100—1199)

XV Office of the Federal Inspector for the Alaska Natural Gas Transportation System (Parts 1500—1599)

XVII Defense Nuclear Facilities Safety Board (Parts 1700—1799)

Title 11—Federal Elections

I Federal Election Commission (Parts 1—9099)

Title 12—Banks and Banking

I Comptroller of the Currency, Department of the Treasury (Parts 1—199)

II Federal Reserve System (Parts 200—299)

III Federal Deposit Insurance Corporation (Parts 300—399)

IV Export-Import Bank of the United States (Parts 400—499)

Title 12—Banks and Banking—Continued

Chap.

V Office of Thrift Supervision, Department of the Treasury (Parts 500—599)

VI Farm Credit Administration (Parts 600—699)

VII National Credit Union Administration (Parts 700—799)

VIII Federal Financing Bank (Parts 800—899)

IX Federal Housing Finance Board (Parts 900—999)

XI Federal Financial Institutions Examination Council (Parts 1100—1199)

XIV Farm Credit System Insurance Corporation (Parts 1400—1499)

XV Thrift Depositor Protection Oversight Board (Parts 1500—1599)

XVII Office of Federal Housing Enterprise Oversight, Department of Housing and Urban Development (Parts 1700-1799)

XVIII Community Development Financial Institutions Fund, Department of the Treasury (Parts 1800—1899)

Title 13—Business Credit and Assistance

I Small Business Administration (Parts 1—199)

III Economic Development Administration, Department of Commerce (Parts 300—399)

Title 14—Aeronautics and Space

I Federal Aviation Administration, Department of Transportation (Parts 1—199)

II Office of the Secretary, Department of Transportation (Aviation Proceedings) (Parts 200—399)

III Commercial Space Transportation, Federal Aviation Administration, Department of Transportation (Parts 400—499)

V National Aeronautics and Space Administration (Parts 1200—1299)

Title 15—Commerce and Foreign Trade

SUBTITLE A—Office of the Secretary of Commerce (Parts 0—29)

SUBTITLE B—Regulations Relating to Commerce and Foreign Trade

I Bureau of the Census, Department of Commerce (Parts 30—199)

II National Institute of Standards and Technology, Department of Commerce (Parts 200—299)

III International Trade Administration, Department of Commerce (Parts 300—399)

IV Foreign-Trade Zones Board, Department of Commerce (Parts 400—499)

VII Bureau of Export Administration, Department of Commerce (Parts 700—799)

VIII Bureau of Economic Analysis, Department of Commerce (Parts 800—899)

IX National Oceanic and Atmospheric Administration, Department of Commerce (Parts 900—999)

Title 15—Commerce and Foreign Trade—Continued

Chap.

XI Technology Administration, Department of Commerce (Parts 1100—1199)

XIII East-West Foreign Trade Board (Parts 1300—1399)

XIV Minority Business Development Agency (Parts 1400—1499)

SUBTITLE C—Regulations Relating to Foreign Trade Agreements

XX Office of the United States Trade Representative (Parts 2000—2099)

SUBTITLE D—Regulations Relating to Telecommunications and Information

XXIII National Telecommunications and Information Administration, Department of Commerce (Parts 2300—2399)

Title 16—Commercial Practices

I Federal Trade Commission (Parts 0—999)

II Consumer Product Safety Commission (Parts 1000—1799)

Title 17—Commodity and Securities Exchanges

I Commodity Futures Trading Commission (Parts 1—199)

II Securities and Exchange Commission (Parts 200—399)

IV Department of the Treasury (Parts 400—499)

Title 18—Conservation of Power and Water Resources

I Federal Energy Regulatory Commission, Department of Energy (Parts 1—399)

III Delaware River Basin Commission (Parts 400—499)

VI Water Resources Council (Parts 700—799)

VIII Susquehanna River Basin Commission (Parts 800—899)

XIII Tennessee Valley Authority (Parts 1300—1399)

Title 19—Customs Duties

I United States Customs Service, Department of the Treasury (Parts 1—199)

II United States International Trade Commission (Parts 200—299)

III International Trade Administration, Department of Commerce (Parts 300—399)

Title 20—Employees' Benefits

I Office of Workers' Compensation Programs, Department of Labor (Parts 1—199)

II Railroad Retirement Board (Parts 200—399)

III Social Security Administration (Parts 400—499)

IV Employees' Compensation Appeals Board, Department of Labor (Parts 500—599)

V Employment and Training Administration, Department of Labor (Parts 600—699)

Title 20—Employees' Benefits—Continued

Chap.

VI Employment Standards Administration, Department of Labor (Parts 700—799)

VII Benefits Review Board, Department of Labor (Parts 800—899)

VIII Joint Board for the Enrollment of Actuaries (Parts 900—999)

IX Office of the Assistant Secretary for Veterans' Employment and Training, Department of Labor (Parts 1000—1099)

Title 21—Food and Drugs

I Food and Drug Administration, Department of Health and Human Services (Parts 1—1299)

II Drug Enforcement Administration, Department of Justice (Parts 1300—1399)

III Office of National Drug Control Policy (Parts 1400—1499)

Title 22—Foreign Relations

I Department of State (Parts 1—199)

II Agency for International Development, International Development Cooperation Agency (Parts 200—299)

III Peace Corps (Parts 300—399)

IV International Joint Commission, United States and Canada (Parts 400—499)

V United States Information Agency (Parts 500—599)

VI United States Arms Control and Disarmament Agency (Parts 600—699)

VII Overseas Private Investment Corporation, International Development Cooperation Agency (Parts 700—799)

IX Foreign Service Grievance Board Regulations (Parts 900—999)

X Inter-American Foundation (Parts 1000—1099)

XI International Boundary and Water Commission, United States and Mexico, United States Section (Parts 1100—1199)

XII United States International Development Cooperation Agency (Parts 1200—1299)

XIII Board for International Broadcasting (Parts 1300—1399)

XIV Foreign Service Labor Relations Board; Federal Labor Relations Authority; General Counsel of the Federal Labor Relations Authority; and the Foreign Service Impasse Disputes Panel (Parts 1400—1499)

XV African Development Foundation (Parts 1500—1599)

XVI Japan-United States Friendship Commission (Parts 1600—1699)

XVII United States Institute of Peace (Parts 1700—1799)

Title 23—Highways

I Federal Highway Administration, Department of Transportation (Parts 1—999)

II National Highway Traffic Safety Administration and Federal Highway Administration, Department of Transportation (Parts 1200—1299)

Title 23—Highways—Continued

Chap.

III National Highway Traffic Safety Administration, Department of Transportation (Parts 1300—1399)

Title 24—Housing and Urban Development

SUBTITLE A—Office of the Secretary, Department of Housing and Urban Development (Parts 0—99)

SUBTITLE B—Regulations Relating to Housing and Urban Development

I Office of Assistant Secretary for Equal Opportunity, Department of Housing and Urban Development (Parts 100—199)

II Office of Assistant Secretary for Housing-Federal Housing Commissioner, Department of Housing and Urban Development (Parts 200—299)

III Government National Mortgage Association, Department of Housing and Urban Development (Parts 300—399)

V Office of Assistant Secretary for Community Planning and Development, Department of Housing and Urban Development (Parts 500—599)

VI Office of Assistant Secretary for Community Planning and Development, Department of Housing and Urban Development (Parts 600—699) [Reserved]

VII Office of the Secretary, Department of Housing and Urban Development (Housing Assistance Programs and Public and Indian Housing Programs) (Parts 700—799)

VIII Office of the Assistant Secretary for Housing—Federal Housing Commissioner, Department of Housing and Urban Development (Section 8 Housing Assistance Programs and Section 202 Direct Loan Program) (Parts 800—899)

IX Office of Assistant Secretary for Public and Indian Housing, Department of Housing and Urban Development (Parts 900—999)

X Office of Assistant Secretary for Housing—Federal Housing Commissioner, Department of Housing and Urban Development (Interstate Land Sales Registration Program) (Parts 1700—1799)

XII Office of Inspector General, Department of Housing and Urban Development (Parts 2000—2099)

XX Office of Assistant Secretary for Housing—Federal Housing Commissioner, Department of Housing and Urban Development (Parts 3200—3899)

XXV Neighborhood Reinvestment Corporation (Parts 4100—4199)

Title 25—Indians

I Bureau of Indian Affairs, Department of the Interior (Parts 1—299)

II Indian Arts and Crafts Board, Department of the Interior (Parts 300—399)

III National Indian Gaming Commission, Department of the Interior (Parts 500—599)

IV Office of Navajo and Hopi Indian Relocation (Parts 700—799)

Title 25—Indians—Continued

Chap.

V Bureau of Indian Affairs, Department of the Interior, and Indian Health Service, Department of Health and Human Services (Part 900)

VI Office of the Assistant Secretary-Indian Affairs, Department of the Interior (Part 1001)

VII Office of the Special Trustee for American Indians, Department of the Interior (Part 1200)

Title 26—Internal Revenue

I Internal Revenue Service, Department of the Treasury (Parts 1—799)

Title 27—Alcohol, Tobacco Products and Firearms

I Bureau of Alcohol, Tobacco and Firearms, Department of the Treasury (Parts 1—299)

Title 28—Judicial Administration

I Department of Justice (Parts 0—199)

III Federal Prison Industries, Inc., Department of Justice (Parts 300—399)

V Bureau of Prisons, Department of Justice (Parts 500—599)

VI Offices of Independent Counsel, Department of Justice (Parts 600—699)

VII Office of Independent Counsel (Parts 700—799)

Title 29—Labor

SUBTITLE A—Office of the Secretary of Labor (Parts 0—99)

SUBTITLE B—Regulations Relating to Labor

I National Labor Relations Board (Parts 100—199)

II Office of Labor-Management Standards, Department of Labor (Parts 200—299)

III National Railroad Adjustment Board (Parts 300—399)

IV Office of Labor-Management Standards, Department of Labor (Parts 400—499)

V Wage and Hour Division, Department of Labor (Parts 500—899)

IX Construction Industry Collective Bargaining Commission (Parts 900—999)

X National Mediation Board (Parts 1200—1299)

XII Federal Mediation and Conciliation Service (Parts 1400—1499)

XIV Equal Employment Opportunity Commission (Parts 1600—1699)

XVII Occupational Safety and Health Administration, Department of Labor (Parts 1900—1999)

XX Occupational Safety and Health Review Commission (Parts 2200—2499)

XXV Pension and Welfare Benefits Administration, Department of Labor (Parts 2500—2599)

Title 29—Labor—Continued

Chap.

XXVII Federal Mine Safety and Health Review Commission (Parts 2700—2799)

XL Pension Benefit Guaranty Corporation (Parts 4000—4999)

Title 30—Mineral Resources

I Mine Safety and Health Administration, Department of Labor (Parts 1—199)

II Minerals Management Service, Department of the Interior (Parts 200—299)

III Board of Surface Mining and Reclamation Appeals, Department of the Interior (Parts 300—399)

IV Geological Survey, Department of the Interior (Parts 400—499)

VI Bureau of Mines, Department of the Interior (Parts 600—699)

VII Office of Surface Mining Reclamation and Enforcement, Department of the Interior (Parts 700—999)

Title 31—Money and Finance: Treasury

SUBTITLE A—Office of the Secretary of the Treasury (Parts 0—50)

SUBTITLE B—Regulations Relating to Money and Finance

I Monetary Offices, Department of the Treasury (Parts 51—199)

II Fiscal Service, Department of the Treasury (Parts 200—399)

IV Secret Service, Department of the Treasury (Parts 400—499)

V Office of Foreign Assets Control, Department of the Treasury (Parts 500—599)

VI Bureau of Engraving and Printing, Department of the Treasury (Parts 600—699)

VII Federal Law Enforcement Training Center, Department of the Treasury (Parts 700—799)

VIII Office of International Investment, Department of the Treasury (Parts 800—899)

Title 32—National Defense

SUBTITLE A—Department of Defense

I Office of the Secretary of Defense (Parts 1—399)

V Department of the Army (Parts 400—699)

VI Department of the Navy (Parts 700—799)

VII Department of the Air Force (Parts 800—1099)

SUBTITLE B—Other Regulations Relating to National Defense

XII Defense Logistics Agency (Parts 1200—1299)

XVI Selective Service System (Parts 1600—1699)

XIX Central Intelligence Agency (Parts 1900—1999)

XX Information Security Oversight Office, National Archives and Records Administration (Parts 2000—2099)

XXI National Security Council (Parts 2100—2199)

Title 32—National Defense—Continued

Chap.

XXIV Office of Science and Technology Policy (Parts 2400—2499)

XXVII Office for Micronesian Status Negotiations (Parts 2700—2799)

XXVIII Office of the Vice President of the United States (Parts 2800—2899)

XXIX Presidential Commission on the Assignment of Women in the Armed Forces (Part 2900)

Title 33—Navigation and Navigable Waters

I Coast Guard, Department of Transportation (Parts 1—199)

II Corps of Engineers, Department of the Army (Parts 200—399)

IV Saint Lawrence Seaway Development Corporation, Department of Transportation (Parts 400—499)

Title 34—Education

SUBTITLE A—Office of the Secretary, Department of Education (Parts 1—99)

SUBTITLE B—Regulations of the Offices of the Department of Education

I Office for Civil Rights, Department of Education (Parts 100—199)

II Office of Elementary and Secondary Education, Department of Education (Parts 200—299)

III Office of Special Education and Rehabilitative Services, Department of Education (Parts 300—399)

IV Office of Vocational and Adult Education, Department of Education (Parts 400—499)

V Office of Bilingual Education and Minority Languages Affairs, Department of Education (Parts 500—599)

VI Office of Postsecondary Education, Department of Education (Parts 600—699)

VII Office of Educational Research and Improvement, Department of Education (Parts 700—799)

XI National Institute for Literacy (Parts 1100-1199)

SUBTITLE C—Regulations Relating to Education

XII National Council on Disability (Parts 1200—1299)

Title 35—Panama Canal

I Panama Canal Regulations (Parts 1—299)

Title 36—Parks, Forests, and Public Property

I National Park Service, Department of the Interior (Parts 1—199)

II Forest Service, Department of Agriculture (Parts 200—299)

III Corps of Engineers, Department of the Army (Parts 300—399)

IV American Battle Monuments Commission (Parts 400—499)

V Smithsonian Institution (Parts 500—599)

VII Library of Congress (Parts 700—799)

Title 36—Parks, Forests, and Public Property—Continued

Chap.

VIII Advisory Council on Historic Preservation (Parts 800—899)

IX Pennsylvania Avenue Development Corporation (Parts 900—999)

XI Architectural and Transportation Barriers Compliance Board (Parts 1100—1199)

XII National Archives and Records Administration (Parts 1200—1299)

XIV Assassination Records Review Board (Parts 1400-1499)

Title 37—Patents, Trademarks, and Copyrights

I Patent and Trademark Office, Department of Commerce (Parts 1—199)

II Copyright Office, Library of Congress (Parts 200—299)

IV Assistant Secretary for Technology Policy, Department of Commerce (Parts 400—499)

V Under Secretary for Technology, Department of Commerce (Parts 500—599)

Title 38—Pensions, Bonuses, and Veterans' Relief

I Department of Veterans Affairs (Parts 0—99)

Title 39—Postal Service

I United States Postal Service (Parts 1—999)

III Postal Rate Commission (Parts 3000—3099)

Title 40—Protection of Environment

I Environmental Protection Agency (Parts 1—799)

V Council on Environmental Quality (Parts 1500—1599)

Title 41—Public Contracts and Property Management

SUBTITLE B—Other Provisions Relating to Public Contracts

50 Public Contracts, Department of Labor (Parts 50–1—50–999)

51 Committee for Purchase From People Who Are Blind or Severely Disabled (Parts 51–1—51–99)

60 Office of Federal Contract Compliance Programs, Equal Employment Opportunity, Department of Labor (Parts 60–1—60–999)

61 Office of the Assistant Secretary for Veterans Employment and Training, Department of Labor (Parts 61–1—61–999)

SUBTITLE C—Federal Property Management Regulations System

101 Federal Property Management Regulations (Parts 101–1—101–99)

105 General Services Administration (Parts 105–1—105–999)

109 Department of Energy Property Management Regulations (Parts 109–1—109–99)

114 Department of the Interior (Parts 114–1—114–99)

115 Environmental Protection Agency (Parts 115–1—115–99)

128 Department of Justice (Parts 128–1—128–99)

Title 41—Public Contracts and Property Management—Continued

Chap.

SUBTITLE D—Other Provisions Relating to Property Management [Reserved]

SUBTITLE E—Federal Information Resources Management Regulations System

201 Federal Information Resources Management Regulation (Parts 201–1—201–99) [Reserved]

SUBTITLE F—Federal Travel Regulation System

301 Travel Allowances (Parts 301–1—301–99)

302 Relocation Allowances (Parts 302–1—302–99)

303 Payment of Expenses Connected with the Death of Certain Employees (Parts 303–1—303–2)

304 Payment from a Non-Federal Source for Travel Expenses (Parts 304–1—304–99)

Title 42—Public Health

I Public Health Service, Department of Health and Human Services (Parts 1—199)

IV Health Care Financing Administration, Department of Health and Human Services (Parts 400—499)

V Office of Inspector General-Health Care, Department of Health and Human Services (Parts 1000—1999)

Title 43—Public Lands: Interior

SUBTITLE A—Office of the Secretary of the Interior (Parts 1—199)

SUBTITLE B—Regulations Relating to Public Lands

I Bureau of Reclamation, Department of the Interior (Parts 200—499)

II Bureau of Land Management, Department of the Interior (Parts 1000—9999)

III Utah Reclamation Mitigation and Conservation Commission (Parts 10000—10005)

Title 44—Emergency Management and Assistance

I Federal Emergency Management Agency (Parts 0—399)

IV Department of Commerce and Department of Transportation (Parts 400—499)

Title 45—Public Welfare

SUBTITLE A—Department of Health and Human Services (Parts 1—199)

SUBTITLE B—Regulations Relating to Public Welfare

II Office of Family Assistance (Assistance Programs), Administration for Children and Families, Department of Health and Human Services (Parts 200—299)

III Office of Child Support Enforcement (Child Support Enforcement Program), Administration for Children and Families, Department of Health and Human Services (Parts 300—399)

Title 45—Public Welfare—Continued

Chap.

IV Office of Refugee Resettlement, Administration for Children and Families Department of Health and Human Services (Parts 400—499)

V Foreign Claims Settlement Commission of the United States, Department of Justice (Parts 500—599)

VI National Science Foundation (Parts 600—699)

VII Commission on Civil Rights (Parts 700—799)

VIII Office of Personnel Management (Parts 800—899)

X Office of Community Services, Administration for Children and Families, Department of Health and Human Services (Parts 1000—1099)

XI National Foundation on the Arts and the Humanities (Parts 1100—1199)

XII ACTION (Parts 1200—1299)

XIII Office of Human Development Services, Department of Health and Human Services (Parts 1300—1399)

XVI Legal Services Corporation (Parts 1600—1699)

XVII National Commission on Libraries and Information Science (Parts 1700—1799)

XVIII Harry S. Truman Scholarship Foundation (Parts 1800—1899)

XXI Commission on Fine Arts (Parts 2100—2199)

XXII Christopher Columbus Quincentenary Jubilee Commission (Parts 2200—2299)

XXIII Arctic Research Commission (Part 2301)

XXIV James Madison Memorial Fellowship Foundation (Parts 2400—2499)

XXV Corporation for National and Community Service (Parts 2500—2599)

Title 46—Shipping

I Coast Guard, Department of Transportation (Parts 1—199)

II Maritime Administration, Department of Transportation (Parts 200—399)

IV Federal Maritime Commission (Parts 500—599)

Title 47—Telecommunication

I Federal Communications Commission (Parts 0—199)

II Office of Science and Technology Policy and National Security Council (Parts 200—299)

III National Telecommunications and Information Administration, Department of Commerce (Parts 300—399)

Title 48—Federal Acquisition Regulations System

1 Federal Acquisition Regulation (Parts 1—99)

2 Department of Defense (Parts 200—299)

3 Department of Health and Human Services (Parts 300—399)

Title 48—Federal Acquisition Regulations System—Continued

Chap.

4 Department of Agriculture (Parts 400—499)

5 General Services Administration (Parts 500—599)

6 Department of State (Parts 600—699)

7 Agency for International Development (Parts 700—799)

8 Department of Veterans Affairs (Parts 800—899)

9 Department of Energy (Parts 900—999)

10 Department of the Treasury (Parts 1000—1099)

12 Department of Transportation (Parts 1200—1299)

13 Department of Commerce (Parts 1300—1399)

14 Department of the Interior (Parts 1400—1499)

15 Environmental Protection Agency (Parts 1500—1599)

16 Office of Personnel Management Federal Employees Health Benefits Acquisition Regulation (Parts 1600—1699)

17 Office of Personnel Management (Parts 1700—1799)

18 National Aeronautics and Space Administration (Parts 1800—1899)

19 United States Information Agency (Parts 1900—1999)

20 Nuclear Regulatory Commission (Parts 2000—2099)

21 Office of Personnel Management, Federal Employees Group Life Insurance Federal Acquisition Regulation (Parts 2100—2199)

23 Social Security Administration (Parts 2300—2399)

24 Department of Housing and Urban Development (Parts 2400—2499)

25 National Science Foundation (Parts 2500—2599)

28 Department of Justice (Parts 2800—2899)

29 Department of Labor (Parts 2900—2999)

34 Department of Education Acquisition Regulation (Parts 3400—3499)

35 Panama Canal Commission (Parts 3500—3599)

44 Federal Emergency Management Agency (Parts 4400—4499)

51 Department of the Army Acquisition Regulations (Parts 5100—5199)

52 Department of the Navy Acquisition Regulations (Parts 5200—5299)

53 Department of the Air Force Federal Acquisition Regulation Supplement (Parts 5300—5399)

54 Defense Logistics Agency, Department of Defense (Part 5452)

57 African Development Foundation (Parts 5700—5799)

61 General Services Administration Board of Contract Appeals (Parts 6100—6199)

63 Department of Transportation Board of Contract Appeals (Parts 6300—6399)

99 Cost Accounting Standards Board, Office of Federal Procurement Policy, Office of Management and Budget (Parts 9900—9999)

Title 49—Transportation

Title 49—Transportation—Continued

Chap.

SUBTITLE A—Office of the Secretary of Transportation (Parts 1—99)

SUBTITLE B—Other Regulations Relating to Transportation

I Research and Special Programs Administration, Department of Transportation (Parts 100—199)

II Federal Railroad Administration, Department of Transportation (Parts 200—299)

III Federal Highway Administration, Department of Transportation (Parts 300—399)

IV Coast Guard, Department of Transportation (Parts 400—499)

V National Highway Traffic Safety Administration, Department of Transportation (Parts 500—599)

VI Federal Transit Administration, Department of Transportation (Parts 600—699)

VII National Railroad Passenger Corporation (AMTRAK) (Parts 700—799)

VIII National Transportation Safety Board (Parts 800—999)

X Surface Transportation Board, Department of Transportation (Parts 1000—1399)

Title 50—Wildlife and Fisheries

I United States Fish and Wildlife Service, Department of the Interior (Parts 1—199)

II National Marine Fisheries Service, National Oceanic and Atmospheric Administration, Department of Commerce (Parts 200—299)

III International Fishing and Related Activities (Parts 300—399)

IV Joint Regulations (United States Fish and Wildlife Service, Department of the Interior and National Marine Fisheries Service, National Oceanic and Atmospheric Administration, Department of Commerce); Endangered Species Committee Regulations (Parts 400—499)

V Marine Mammal Commission (Parts 500—599)

VI Fishery Conservation and Management, National Oceanic and Atmospheric Administration, Department of Commerce (Parts 600—699)

CFR Index and Finding Aids

Subject/Agency Index

List of Agency Prepared Indexes

Parallel Tables of Statutory Authorities and Rules

Acts Requiring Publication in the Federal Register

List of CFR Titles, Chapters, Subchapters, and Parts

Alphabetical List of Agencies Appearing in the CFR

Alphabetical List of Agencies Appearing in the CFR

(Revised as of June 20, 1997)

Agency	CFR Title, Subtitle or Chapter
ACTION	45, XII
Administrative Committee of the Federal Register	1, I
Advanced Research Projects Agency	32, I
Advisory Commission on Intergovernmental Relations	5, VII
Advisory Committee on Federal Pay	5, IV
Advisory Council on Historic Preservation	36, VIII
African Development Foundation	22, XV
Federal Acquisition Regulation	48, 57
Agency for International Development	22, II
Federal Acquisition Regulation	48, 7
Agricultural Marketing Service	7, I, IX, X, XI
Agricultural Research Service	7, V
Agriculture Department	
Agricultural Marketing Service	7, I, IX, X, XI
Agricultural Research Service	7, V
Animal and Plant Health Inspection Service	7, III; 9, I
Commodity Credit Corporation	7, XIV
Cooperative State Research, Education, and Extension Service	7, XXXIV
Economic Research Service	7, XXXVII
Energy, Office of	7, XXIX
Environmental Quality, Office of	7, XXXI
Farm Service Agency	7, VII, XVIII
Federal Acquisition Regulation	48, 4
Federal Crop Insurance Corporation	7, IV
Finance and Management, Office of	7, XXX
Food and Consumer Service	7, II
Food Safety and Inspection Service	9, III
Foreign Agricultural Service	7, XV
Forest Service	36, II
Grain Inspection, Packers and Stockyards Administration	7, VIII; 9, II
Information Resources Management, Office of	7, XXVII
Inspector General, Office of	7, XXVI
National Agricultural Library	7, XLI
National Agricultural Statistics Service	7, XXXVI
Natural Resources Conservation Service	7, VI
Operations, Office of	7, XXVIII
Rural Business-Cooperative Service	7, XVIII, XLII
Rural Development Administration	7, XLII
Rural Housing Service	7, XVIII, XXXV
Rural Telephone Bank	7, XVI
Rural Utilities Service	7, XVII, XVIII, XLII
Secretary of Agriculture, Office of	7, Subtitle A
Transportation, Office of	7, XXXIII
World Agricultural Outlook Board	7, XXXVIII
Air Force Department	32, VII
Federal Acquisition Regulation Supplement	48, 53
Alaska Natural Gas Transportation System, Office of the Federal Inspector	10, XV
Alcohol, Tobacco and Firearms, Bureau of	27, I
AMTRAK	49, VII
American Battle Monuments Commission	36, IV
American Indians, Office of the Special Trustee	25, VII

Agency	CFR Title, Subtitle or Chapter
Animal and Plant Health Inspection Service	7, III; 9, I
Appalachian Regional Commission	5, IX
Architectural and Transportation Barriers Compliance Board	36, XI
Arctic Research Commission	45, XXIII
Armed Forces Retirement Home	5, XI
Arms Control and Disarmament Agency, United States	22, VI
Army Department	32, V
Engineers, Corps of	33, II; 36, III
Federal Acquisition Regulation	48, 51
Assassination Records Review Board	36, XIV
Benefits Review Board	20, VII
Bilingual Education and Minority Languages Affairs, Office of	34, V
Blind or Severely Disabled, Committee for Purchase From People Who Are	41, 51
Board for International Broadcasting	22, XIII
Census Bureau	15, I
Central Intelligence Agency	32, XIX
Child Support Enforcement, Office of	45, III
Children and Families, Administration for	45, II, III, IV, X
Christopher Columbus Quincentenary Jubilee Commission	45, XXII
Civil Rights, Commission on	45, VII
Civil Rights, Office for	34, I
Coast Guard	33, I; 46, I; 49, IV
Commerce Department	44, IV
Census Bureau	15, I‘
Economic Affairs, Under Secretary	37, V
Economic Analysis, Bureau of	15, VIII
Economic Development Administration	13, III
Emergency Management and Assistance	44, IV
Export Administration, Bureau of	15, VII
Federal Acquisition Regulation	48, 13
Fishery Conservation and Management	50, VI
Foreign-Trade Zones Board	15, IV
International Trade Administration	15, III; 19, III
National Institute of Standards and Technology	15, II
National Marine Fisheries Service	50, II, IV
National Oceanic and Atmospheric Administration	15, IX; 50, II, III, IV, VI
National Telecommunications and Information Administration	15, XXIII; 47, III
National Weather Service	15, IX
Patent and Trademark Office	37, I
Productivity, Technology and Innovation, Assistant Secretary for	37, IV
Secretary of Commerce, Office of	15, Subtitle A
Technology, Under Secretary for	37, V
Technology Administration	15, XI
Technology Policy, Assistant Secretary for	37, IV
Commercial Space Transportation	14, III
Commodity Credit Corporation	7, XIV
Commodity Futures Trading Commission	5, XLI; 17, I
Community Planning and Development, Office of Assistant Secretary for	24, V, VI
Community Services, Office of	45, X
Comptroller of the Currency	12, I
Construction Industry Collective Bargaining Commission	29, IX
Consumer Product Safety Commission	5, LXXI; 16, II
Cooperative State Research, Education, and Extension Service	7, XXXIV
Copyright Office	37, II
Cost Accounting Standards Board	48, 99
Council on Environmental Quality	40, V
Customs Service, United States	19, I
Defense Contract Audit Agency	32, I
Defense Department	5, XXVI; 32, Subtitle A
Advanced Research Projects Agency	32, I
Air Force Department	32, VII
Army Department	32, V; 33, II; 36, III, 48, 51

Agency	CFR Title, Subtitle or Chapter
Defense Intelligence Agency	32, I
Defense Logistics Agency	32, I, XII; 48, 54
Defense Mapping Agency	32, I
Engineers, Corps of	33, II; 36, III
Federal Acquisition Regulation	48, 2
Navy Department	32, VI; 48, 52
Secretary of Defense, Office of	32, I
Defense Contract Audit Agency	32, I
Defense Intelligence Agency	32, I
Defense Logistics Agency	32, XII; 48, 54
Defense Mapping Agency	32, I
Defense Nuclear Facilities Safety Board	10, XVII
Delaware River Basin Commission	18, III
Drug Enforcement Administration	21, II
East-West Foreign Trade Board	15, XIII
Economic Affairs, Under Secretary	37, V
Economic Analysis, Bureau of	15, VIII
Economic Development Administration	13, III
Economic Research Service	7, XXXVII
Education, Department of	5, LIII
Bilingual Education and Minority Languages Affairs, Office of	34, V
Civil Rights, Office for	34, I
Educational Research and Improvement, Office of	34, VII
Elementary and Secondary Education, Office of	34, II
Federal Acquisition Regulation	48, 34
Postsecondary Education, Office of	34, VI
Secretary of Education, Office of	34, Subtitle A
Special Education and Rehabilitative Services, Office of	34, III
Vocational and Adult Education, Office of	34, IV
Educational Research and Improvement, Office of	34, VII
Elementary and Secondary Education, Office of	34, II
Employees' Compensation Appeals Board	20, IV
Employees Loyalty Board	5, V
Employment and Training Administration	20, V
Employment Standards Administration	20, VI
Endangered Species Committee	50, IV
Energy, Department of	5, XXIII; 10, II, III, X
Federal Acquisition Regulation	48, 9
Federal Energy Regulatory Commission	5, XXIV; 18, I
Property Management Regulations	41, 109
Energy, Office of	7, XXIX
Engineers, Corps of	33, II; 36, III
Engraving and Printing, Bureau of	31, VI
Enrichment Corporation, United States	10, XI
Environmental Protection Agency	5, LIV; 40, I
Federal Acquisition Regulation	48, 15
Property Management Regulations	41, 115
Environmental Quality, Office of	7, XXXI
Equal Employment Opportunity Commission	5, LXII; 29, XIV
Equal Opportunity, Office of Assistant Secretary for	24, I
Executive Office of the President	3, I
Administration, Office of	5, XV
Environmental Quality, Council on	40, V
Management and Budget, Office of	25, III, LXXVII; 48, 99
National Drug Control Policy, Office of	21, III
National Security Council	32, XXI; 47, 2
Presidential Documents	3
Science and Technology Policy, Office of	32, XXIV; 47, II
Trade Representative, Office of the United States	15, XX
Export Administration, Bureau of	15, VII
Export-Import Bank of the United States	5, LII; 12, IV
Family Assistance, Office of	45, II
Farm Credit Administration	5, XXXI; 12, VI
Farm Credit System Insurance Corporation	5, XXX; 12, XIV
Farm Service Agency	7, VII, XVIII
Federal Acquisition Regulation	48, 1
Federal Aviation Administration	14, I

Agency	CFR Title, Subtitle or Chapter
Commercial Space Transportation	14, III
Federal Claims Collection Standards	4, II
Federal Communications Commission	5, XXIX; 47, I
Federal Contract Compliance Programs, Office of	41, 60
Federal Crop Insurance Corporation	7, IV
Federal Deposit Insurance Corporation	5, XXII; 12, III
Federal Election Commission	11, I
Federal Emergency Management Agency	44, I
Federal Acquisition Regulation	48, 44
Federal Employees Group Life Insurance Federal Acquisition Regulation	48, 21
Federal Employees Health Benefits Acquisition Regulation	48, 16
Federal Energy Regulatory Commission	5, XXIV; 18, I
Federal Financial Institutions Examination Council	12, XI
Federal Financing Bank	12, VIII
Federal Highway Administration	23, I, II; 49, III
Federal Home Loan Mortgage Corporation	1, IV
Federal Housing Enterprise Oversight Office	12, XVII
Federal Housing Finance Board	12, IX
Federal Inspector for the Alaska Natural Gas Transportation System, Office of	10, XV
Federal Labor Relations Authority, and General Counsel of the Federal Labor Relations Authority	5, XIV; 22, XIV
Federal Law Enforcement Training Center	31, VII
Federal Maritime Commission	46, IV
Federal Mediation and Conciliation Service	29, XII
Federal Mine Safety and Health Review Commission	5, LXXIV; 29, XXVII
Federal Pay, Advisory Committee on	5, IV
Federal Prison Industries, Inc.	28, III
Federal Procurement Policy Office	48, 99
Federal Property Management Regulations	41, 101
Federal Property Management Regulations System	41, Subtitle C
Federal Railroad Administration	49, II
Federal Register, Administrative Committee of	1, I
Federal Register, Office of	1, II
Federal Reserve System	12, II
Board of Governors	5, LVIII
Federal Retirement Thrift Investment Board	5, VI, LXXVI
Federal Service Impasses Panel	5, XIV
Federal Trade Commission	5, XLVII; 16, I
Federal Transit Administration	49, VI
Federal Travel Regulation System	41, Subtitle F
Finance and Management, Office of	7, XXX
Fine Arts, Commission on	45, XXI
Fiscal Service	31, II
Fish and Wildlife Service, United States	50, I, IV
Fishery Conservation and Management	50, VI
Food and Drug Administration	21, I
Food and Consumer Service	7, II
Food Safety and Inspection Service	9, III
Foreign Agricultural Service	7, XV
Foreign Assets Control, Office of	31, V
Foreign Claims Settlement Commission of the United States	45, V
Foreign Service Grievance Board	22, IX
Foreign Service Impasse Disputes Panel	22, XIV
Foreign Service Labor Relations Board	22, XIV
Foreign-Trade Zones Board	15, IV
Forest Service	36, II
General Accounting Office	4, I, II
General Services Administration	5, LVII
Contract Appeals, Board of	48, 61
Federal Acquisition Regulation	48, 5
Federal Property Management Regulations System	41, 101, 105
Federal Travel Regulation System	41, Subtitle F
Payment From a Non-Federal Source for Travel Expenses	41, 304
Payment of Expenses Connected With the Death of Certain Employees	41, 303
Relocation Allowances	41, 302

Agency	CFR Title, Subtitle or Chapter
Travel Allowances	41, 301
Geological Survey	30, IV
Government Ethics, Office of	5, XVI
Government National Mortgage Association	24, III
Grain Inspection, Packers and Stockyards Administration	7, VIII; 9, II
Great Lakes Pilotage	46, III
Harry S. Truman Scholarship Foundation	45, XVIII
Health and Human Services, Department of	5, XLV; 45, Subtitle A
Child Support Enforcement, Office of	45, III
Children and Families, Administration for	45, II, III, IV, X
Community Services, Office of	45, X
Family Assistance, Office of	45, II
Federal Acquisition Regulation	48, 3
Food and Drug Administration	21, I
Health Care Financing Administration	42, IV
Human Development Services, Office of	45, XIII
Indian Health Service	25, V
Inspector General (Health Care), Office of	42, V
Public Health Service	42, I
Refugee Resettlement, Office of	45, IV
Health Care Financing Administration	42, IV
Housing and Urban Development, Department of	5, LXV; 24, Subtitle B
Community Planning and Development, Office of Assistant Secretary for	24, V, VI
Equal Opportunity, Office of Assistant Secretary for	24, I
Federal Acquisition Regulation	48, 24
Federal Housing Enterprise Oversight, Office of	12, XVII
Government National Mortgage Association	24, III
Housing—Federal Housing Commissioner, Office of Assistant Secretary for	24, II, VIII, X, XX
Inspector General, Office of	24, XII
Public and Indian Housing, Office of Assistant Secretary for	24, IX
Secretary, Office of	24, Subtitle A, VII
Housing—Federal Housing Commissioner, Office of Assistant Secretary for	24, II, VIII, X, XX
Human Development Services, Office of	45, XIII
Immigration and Naturalization Service	8, I
Independent Counsel, Office of	28, VII
Indian Affairs, Bureau of	25, I, V
Indian Affairs, Office of the Assistant Secretary	25, VI
Indian Arts and Crafts Board	25, II
Indian Health Service	25, V
Information Agency, United States	22, V
Federal Acquisition Regulation	48, 19
Information Resources Management, Office of	7, XXVII
Information Security Oversight Office, National Archives and Records Administration	32, XX
Inspector General	
Agriculture Department	7, XXVI
Health and Human Services Department	42, V
Housing and Urban Development Department	24, XII
Institute of Peace, United States	22, XVII
Inter-American Foundation	5, LXIII; 22, X
Intergovernmental Relations, Advisory Commission on	5, VII
Interior Department	
American Indians, Office of the Special Trustee	25, VII
Endangered Species Committee	50, IV
Federal Acquisition Regulation	48, 14
Federal Property Management Regulations System	41, 114
Fish and Wildlife Service, United States	50, I, IV
Geological Survey	30, IV
Indian Affairs, Bureau of	25, I, V
Indian Affairs, Office of the Assistant Secretary	25, VI
Indian Arts and Crafts Board	25, II
Land Management, Bureau of	43, II
Minerals Management Service	30, II
Mines, Bureau of	30, VI
National Indian Gaming Commission	25, III

Agency	CFR Title, Subtitle or Chapter
National Park Service	36, I
Reclamation, Bureau of	43, I
Secretary of the Interior, Office of	43, Subtitle A
Surface Mining and Reclamation Appeals, Board of	30, III
Surface Mining Reclamation and Enforcement, Office of	30, VII
Internal Revenue Service	26, I
International Boundary and Water Commission, United States and Mexico, United States Section	22, XI
International Development, Agency for	22, II
Federal Acquisition Regulation	48, 7
International Development Cooperation Agency, United States	22, XII
International Development, Agency for	22, II; 48, 7
Overseas Private Investment Corporation	5, XXXIII; 22, VII
International Fishing and Related Activities	50, III
International Investment, Office of	31, VIII
International Joint Commission, United States and Canada	22, IV
International Organizations Employees Loyalty Board	5, V
International Trade Administration	15, III; 19, III
International Trade Commission, United States	19, II
Interstate Commerce Commission	5, XL
James Madison Memorial Fellowship Foundation	45, XXIV
Japan–United States Friendship Commission	22, XVI
Joint Board for the Enrollment of Actuaries	20, VIII
Justice Department	5, XXVIII; 28, I
Drug Enforcement Administration	21, II
Federal Acquisition Regulation	48, 28
Federal Claims Collection Standards	4, II
Federal Prison Industries, Inc.	28, III
Foreign Claims Settlement Commission of the United States	45, V
Immigration and Naturalization Service	8, I
Offices of Independent Counsel	28, VI
Prisons, Bureau of	28, V
Property Management Regulations	41, 128
Labor Department	5, XLII
Benefits Review Board	20, VII
Employees' Compensation Appeals Board	20, IV
Employment and Training Administration	20, V
Employment Standards Administration	20, VI
Federal Acquisition Regulation	48, 29
Federal Contract Compliance Programs, Office of	41, 60
Federal Procurement Regulations System	41, 50
Labor-Management Standards, Office of	29, II, IV
Mine Safety and Health Administration	30, I
Occupational Safety and Health Administration	29, XVII
Pension and Welfare Benefits Administration	29, XXV
Public Contracts	41, 50
Secretary of Labor, Office of	29, Subtitle A
Veterans' Employment and Training, Office of the Assistant Secretary for	41, 61; 20, IX
Wage and Hour Division	29, V
Workers' Compensation Programs, Office of	20, I
Labor-Management Standards, Office of	29, II, IV
Land Management, Bureau of	43, II
Legal Services Corporation	45, XVI
Library of Congress	36, VII
Copyright Office	37, II
Management and Budget, Office of	5, III, LXXVII; 48, 99
Marine Mammal Commission	50, V
Maritime Administration	46, II
Merit Systems Protection Board	5, II
Micronesian Status Negotiations, Office for	32, XXVII
Mine Safety and Health Administration	30, I
Minerals Management Service	30, II
Mines, Bureau of	30, VI
Minority Business Development Agency	15, XIV
Miscellaneous Agencies	1, IV

Agency	CFR Title, Subtitle or Chapter
Monetary Offices	31, I
National Aeronautics and Space Administration	5, LIX; 14, V
Federal Acquisition Regulation	48, 18
National Agricultural Library	7, XLI
National Agricultural Statistics Service	7, XXXVI
National Archives and Records Administration	5, LXVI; 36, XII
Information Security Oversight Office	32, XX
National Bureau of Standards	15, II
National Capital Planning Commission	1, IV
National Commission for Employment Policy	1, IV
National Commission on Libraries and Information Science	45, XVII
National and Community Service, Corporation for	45, XXV
National Council on Disability	34, XII
National Credit Union Administration	12, VII
National Drug Control Policy, Office of	21, III
National Foundation on the Arts and the Humanities	45, XI
National Highway Traffic Safety Administration	23, II, III; 49, V
National Indian Gaming Commission	25, III
National Institute for Literacy	34, XI
National Institute of Standards and Technology	15, II
National Labor Relations Board	5, LXI; 29, I
National Marine Fisheries Service	50, II, IV
National Mediation Board	29, X
National Oceanic and Atmospheric Administration	15, IX; 50, II, III, IV, VI
National Park Service	36, I
National Railroad Adjustment Board	29, III
National Railroad Passenger Corporation (AMTRAK)	49, VII
National Science Foundation	5, XLIII; 45, VI
Federal Acquisition Regulation	48, 25
National Security Council	32, XXI
National Security Council and Office of Science and Technology Policy	47, II
National Telecommunications and Information Administration	15, XXIII; 47, III
National Transportation Safety Board	49, VIII
National Weather Service	15, IX
Natural Resources Conservation Service	7, VI
Navajo and Hopi Indian Relocation, Office of	25, IV
Navy Department	32, VI
Federal Acquisition Regulation	48, 52
Neighborhood Reinvestment Corporation	24, XXV
Northeast Dairy Compact Commission	7, XIII
Nuclear Regulatory Commission	5, XLVIII; 10, I
Federal Acquisition Regulation	48, 20
Occupational Safety and Health Administration	29, XVII
Occupational Safety and Health Review Commission	29, XX
Offices of Independent Counsel	28, VI
Operations Office	7, XXVIII
Overseas Private Investment Corporation	5, XXXIII; 22, VII
Panama Canal Commission	48, 35
Panama Canal Regulations	35, I
Patent and Trademark Office	37, I
Payment From a Non-Federal Source for Travel Expenses	41, 304
Payment of Expenses Connected With the Death of Certain Employees	41, 303
Peace Corps	22, III
Pennsylvania Avenue Development Corporation	36, IX
Pension and Welfare Benefits Administration	29, XXV
Pension Benefit Guaranty Corporation	29, XL
Personnel Management, Office of	5, I, XXXV; 45, VIII
Federal Acquisition Regulation	48, 17
Federal Employees Group Life Insurance Federal Acquisition Regulation	48, 21
Federal Employees Health Benefits Acquisition Regulation	48, 16
Postal Rate Commission	5, XLVI; 39, III
Postal Service, United States	5, LX; 39, I
Postsecondary Education, Office of	34, VI
President's Commission on White House Fellowships	1, IV

Agency	CFR Title, Subtitle or Chapter
Presidential Commission on the Assignment of Women in the Armed Forces	32, XXIX
Presidential Documents	3
Prisons, Bureau of	28, V
Productivity, Technology and Innovation, Assistant Secretary	37, IV
Public Contracts, Department of Labor	41, 50
Public and Indian Housing, Office of Assistant Secretary for	24, IX
Public Health Service	42, I
Railroad Retirement Board	20, II
Reclamation, Bureau of	43, I
Refugee Resettlement, Office of	45, IV
Regional Action Planning Commissions	13, V
Relocation Allowances	41, 302
Research and Special Programs Administration	49, I
Rural Business-Cooperative Service	7, XVIII, XLII
Rural Development Administration	7, XLII
Rural Housing Service	7, XVIII, XXXV
Rural Telephone Bank	7, XVI
Rural Utilities Service	7, XVII, XVIII, XLII
Saint Lawrence Seaway Development Corporation	33, IV
Science and Technology Policy, Office of	32, XXIV
Science and Technology Policy, Office of, and National Security Council	47, II
Secret Service	31, IV
Securities and Exchange Commission	17, II
Selective Service System	32, XVI
Small Business Administration	13, I
Smithsonian Institution	36, V
Social Security Administration	20, III; 48, 23
Soldiers' and Airmen's Home, United States	5, XI
Special Counsel, Office of	5, VIII
Special Education and Rehabilitative Services, Office of	34, III
State Department	22, I
Federal Acquisition Regulation	48, 6
Surface Mining and Reclamation Appeals, Board of	30, III
Surface Mining Reclamation and Enforcement, Office of	30, VII
Surface Transportation Board	49, X
Susquehanna River Basin Commission	18, VIII
Technology Administration	15, XI
Technology Policy, Assistant Secretary for	37, IV
Technology, Under Secretary for	37, V
Tennessee Valley Authority	5, LXIX; 18, XIII
Thrift Depositor Protection Oversight Board	12, XV
Thrift Supervision Office, Department of the Treasury	12, V
Trade Representative, United States, Office of	15, XX
Transportation, Department of	5, L
Coast Guard	33, I; 46, I; 49, IV
Commercial Space Transportation	14, III
Contract Appeals, Board of	48, 63
Emergency Management and Assistance	44, IV
Federal Acquisition Regulation	48, 12
Federal Aviation Administration	14, I
Federal Highway Administration	23, I, II; 49, III
Federal Railroad Administration	49, II
Federal Transit Administration	49, VI
Maritime Administration	46, II
National Highway Traffic Safety Administration	23, II, III; 49, V
Research and Special Programs Administration	49, I
Saint Lawrence Seaway Development Corporation	33, IV
Secretary of Transportation, Office of	14, II; 49, Subtitle A
Surface Transportation Board	49, X
Transportation, Office of	7, XXXIII
Travel Allowances	41, 301
Treasury Department	5, XXI; 17, IV
Alcohol, Tobacco and Firearms, Bureau of	27, I
Community Development Financial Institutions Fund	12, XVIII
Comptroller of the Currency	12, I

Agency	CFR Title, Subtitle or Chapter
Customs Service, United States	19, I
Engraving and Printing, Bureau of	31, VI
Federal Acquisition Regulation	48, 10
Federal Law Enforcement Training Center	31, VII
Fiscal Service	31, II
Foreign Assets Control, Office of	31, V
Internal Revenue Service	26, I
International Investment, Office of	31, VIII
Monetary Offices	31, I
Secret Service	31, IV
Secretary of the Treasury, Office of	31, Subtitle A
Thrift Supervision, Office of	12, V
Truman, Harry S. Scholarship Foundation	45, XVIII
United States and Canada, International Joint Commission	22, IV
United States and Mexico, International Boundary and Water Commission, United States Section	22, XI
United States Enrichment Corporation	10, XI
Utah Reclamation Mitigation and Conservation Commission	43, III
Veterans Affairs Department	38, I
Federal Acquisition Regulation	48, 8
Veterans' Employment and Training, Office of the Assistant Secretary for	41, 61; 20, IX
Vice President of the United States, Office of	32, XXVIII
Vocational and Adult Education, Office of	34, IV
Wage and Hour Division	29, V
Water Resources Council	18, VI
Workers' Compensation Programs, Office of	20, I
World Agricultural Outlook Board	7, XXXVIII

Table of OMB Control Numbers

The OMB control numbers for chapter I of title 40 were consolidated into §9.1 at 58 FR 27472, May 10, 1993 and amended at 58 FR 34199, June 23, 1993 and 58 FR 34370, June 25, 1993. Section 9.1 is reprinted below for the convenience of the user.

PART 9—OMB APPROVALS UNDER THE PAPERWORK REDUCTION ACT

AUTHORITY: 7 U.S.C. 135 *et seq.*, 136–136y; 15 U.S.C. 2001, 2003, 2005, 2006, 2601–2671; 21 U.S.C. 331j, 346a, 348; 31 U.S.C. 9701; 33 U.S.C. 1251 *et seq.*, 1311, 1313d, 1314, 1318, 1321, 1326, 1330, 1342, 1344, 1345 (d) and (e), 1361; E.O. 11735, 38 FR 21243, 3 CFR, 1971–1975 Comp. p. 973; 42 U.S.C. 241, 242b, 243, 246, 300f, 300g, 300g–1, 300g–2, 300g–3, 300g–4, 300g–5, 300g–6, 300j–1, 300j–2, 300j–3, 300j–4, 300j–9, 1857 *et seq.*, 6901–6992k, 7401–7671q, 7542, 9601–9657, 11023, 11048.

§9.1 OMB approvals under the Paperwork Reduction Act.

This part consolidates the display of control numbers assigned to collections of information in certain EPA regulations by the Office of Management and Budget (OMB) under the Paperwork Reduction Act (PRA). This part fulfills the requirements of section 3507(f) of the PRA.

40 CFR citation	OMB control No.
Public Information	
Part 2, subpart B	2050–0143
General Regulation for Assistance Programs for Other than State and Local Governments	
30.400	2030–0020
30.500	2030–0020
30.501	2030–0020
30.503	2030–0020
30.505	2030–0020
30.510	2030–0020
30.520	2030–0020
30.530	2030–0020
30.531	2030–0020
30.532	2030–0020
30.535	2030–0020
30.1002	2030–0020
30.1003	2030–0020
30.1200	2030–0020
Uniform Administrative Requirements for Grants and Cooperative Agreements to State and Local Governments	
31.10	2030–0020
31.20–31.21	2030–0020
31.31–31.32	2030–0020
31.36(g)–31.36(h)	2030–0020
31.40	2030–0020
31.42	2030–0020
31.6	2030–0020
Procurement Under Assistance Agreements	
33.110	2030–0003
33.211	2030–0003
State and Local Assistance	
35.2015	2040–0027
35.2025	2040–0027
35.2034	2040–0027
35.2040	2040–0027
35.2105–35.2107	2040–0027
35.2110	2040–0027
35.2114	2040–0027
35.2118	2040–0027
35.2120	2040–0027
35.2127	2040–0027
35.2130	2040–0027
35.2140	2040–0027
35.2211–35.2212	2040–0027
35.2215–35.2216	2040–0027
35.2218	2040–0027
35.3010	2040–0095
35.3030	2040–0095
35.3130	2040–0118
35.3135	2040–0118
35.3140	2040–0118
35.3145	2040–0118
35.3150	2040–0118
35.3155	2040–0118
35.3160	2040–0118
35.3165	2040–0118
35.3170	2040–0118
35.6055(a)(2)	2010–0020
35.6055(b)(1)	2010–0020
35.6055(b)(2)(i)–(ii)	2010–0020
35.6105(a)(2)(i)–(v), (vii)	2010–0020
35.6110(b)(2)	2010–0020
35.6120	2010–0020
35.6145	2010–0020
35.6155(a), (c)	2010–0020
35.6230(a), (c)	2010–0020
35.6300(a)(3)	2010–0020
35.6315(c)	2010–0020
35.6320	2010–0020
35.6340(a)	2010–0020
35.6350	2010–0020
35.6500	2010–0020
35.6550(a)(1)(ii)	2010–0020
35.6550(b)(1)(iii)	2010–0020
35.6550(b)(2)(i)	2010–0020
35.6585	2010–0020

40 CFR citation	OMB control No.
35.6595(a)	2010–0020
35.6600(a)	2010–0020
35.6650	2010–0020
35.6655	2010–0020
35.6660	2010–0020
35.6665(a)	2010–0020
35.6700	2010–0020
35.6705	2010–0020
35.6710	2010–0020
35.6805	2010–0020
35.6815 (a), (d), (e)	2010–0020
35.9000–35.9070	2040–0138
Requirements for Preparation, Adoption, and Submittal of Implementation Plans	
51.160–51.166	2060–0003
51.321–51.323	2060–0088
51.353–51.354	2060–0252
51.365–51.366	2060–0252
51.370–51.371	2060–0252
51.850–51.860	2060–0279
Approval and Promulgation of Implementation Plans	
52.21	2060–0003
52.741	2060–0203
Outer Continental Shelf Air Regulations	
55.4–55.8	2060–0249
55.11–55.14	2060–0249
Ambient Air Quality Surveillance	
58.11–58.14	2060–0084
58.20–58.23	2060–0084
58.25–58.28	2060–0084
58.30–58.31	2060–0084
58.33	2060–0084
58.35	2060–0084
58.40–58.41	2060–0084
58.43	2060–0084
58.45	2060–0084
58.50	2060–0084
Standards of Performance for New Stationary Sources [1]	
60.7(d)	2060–0207
60.45–60.47	2060–0026
60.46a–60.49a	2060–0023
60.40b	2060–0072
60.42b	2060–0072
60.44b–60.49b	2060–0072
60.42c	2060–0202
60.44c–60.48c	2060–0202
60.53–60.54	2060–0040
60.50a	2060–0210
60.56a–60.59a	2060–0210
60.63–60.65	2060–0025
60.73–60.74	2060–0019
60.84–60.85	2060–0041
60.93	2060–0083
60.104–60.108	2060–0022
60.113a–60.115a	2060–0121
60.113b–60.116b	2060–0074
60.123	2060–0080
60.133	2060–0110
60.142–60.144	2060–0029
60.143a–60.145a	2060–0029
60.153–60.155	2060–0035
60.192(b)	2060–0031
60.194–60.195	2060–0031
60.203–60.204	2060–0037
60.213–60.214	2060–0037
60.223–60.224	2060–0037
60.233–60.234	2060–0037
60.243–60.244	2060–0037
60.253–60.254	2060–0122
60.273–60.276	2060–0038
60.273a–60.276a	2060–0038
60.284–60.286	2060–0021
60.292–60.293	2060–0054
60.296	2060–0054
60.303	2060–0082
60.310	2060–0106
60.313–60.316	2060–0106
60.334–60.335	2060–0028
60.343–60.344	2060–0063
60.373–60.374	2060–0081
60.384–60.386	2060–0016
60.393–60.396	2060–0034
60.398	2060–0034
60.403–60.404	2060–0111
60.433–60.435	2060–0105
60.443–60.447	2060–0004
60.453–60.456	2060–0108
60.463–60.466	2060–0107
60.473–60.474	2060–0002
60.482–2	2060–0012
60.482–3	2060–0012
60.482–4	2060–0012
60.482–7	2060–0012
60.482–8	2060–0012
60.482–10	2060–0012
60.483–1	2060–0012
60.483–2	2060–0012
60.484–60.487	2060–0012
60.493–60.496	2060–0001
60.502–60.503	2060–0006
60.505	2060–0006
60.530–60.536	2060–0161
60.537 (a)(1)–(2), (a)(4)–(5), (b)–(i)	2060–0161
60.538–60.539	2060–0161
60.543 (b)(2)–(4), (c)–(n)	2060–0156
60.544	2060–0156
60.545 (a)–(d), (f)	2060–0156
60.546 (a)–(e), (f)(4)–(6), (g)–(j)	2060–0156
60.547	2060–0156
60.562–1	2060–0145
60.562–2	2060–0145
60.563–60.565	2060–0145
60.580	2060–0073
60.583–60.585	2060–0073
60.592–60.593	2060–0067
60.603–60.604	2060–0059
60.613–60.615	2060–0197
60.622	2060–0079
60.624–60.625	2060–0079
60.632–60.636	2060–0120
60.640	2060–0120
60.642–60.644	2060–0120
60.646–60.647	2060–0120
60.663–60.665	2060–0197
60.670	2060–0050
60.672	2060–0050
60.674–60.676	2060–0050
60.683–60.685	2060–0114
60.692–1	2060–0172
60.692–2	2060–0172
60.692–3	2060–0172
60.692–4	2060–0172
60.692–5	2060–0172
60.693–1	2060–0172
60.693–2	2060–0172
60.695–60.698	2060–0172

40 CFR citation	OMB control No.
60.703–60.705	2060–0269
60.710	2060–0171
60.713–60.717	2060–0171
60.722–60.725	2060–0162
60.734–60.736	2060–0251
60.740	2060–0181
60.743–60.747	2060–0181
National Emission Standards for Hazardous Air Pollutants [2]	
61.24–61.25	2060–0191
61.32–61.34	2060–0092
61.53–61.55	2060–0097
61.65(b)–(d)	2060–0071
61.67–61.71	2060–0071
61.93–61.95	2060–0191
61.103–61.105	2060–0191
61.107	2060–0191
61.123–61.124	2060–0191
61.126	2060–0191
61.132–61.133	2060–0185
61.135–61.139	2060–0185
61.142	2060–0101
61.144–61.147	2060–0101
61.149	2060–0101
61.150–61.155	2060–0101
61.163–61.165	2060–0043
61.203	2060–0191
61.206–61.209	2060–0191
61.223–61.224	2060–0191
61.242–1	2060–0068
61.242–2	2060–0068
61.242–3	2060–0068
61.242–4	2060–0068
61.242–7	2060–0068
61.242–8	2060–0068
61.242–10	2060–0068
61.242–11	2060–0068
61.243–1	2060–0068
61.243–2	2060–0068
61.244–61.247	2060–0068
61.253–61.255	2060–0191
61.271–61.276	2060–0185
61.300	2060–0182
61.302–61.305	2060–0182
61.342	2060–0183
61.344–61.349	2060–0183
61.354–61.357	2060–0183
National Emission Standards for Hazardous Air Pollutants for Source Categories [3]	
63.5(d)	2060–0330
63.52–63.56	2060–0266
63.72	2060–0222
63.74–63.79	2060–0222
63.91–63.96	2060–0264
63.103	2060–0282
63.105	2060–0282
63.117–63.118	2060–0282
63.122–63.123	2060–0282
63.129–63.130	2060–0282
63.146–63.148	2060–0282
63.151–63.152	2060–0282
63.181–63.182	2060–0282
63.302–63.311	2060–0253
63.322–63.325	2060–0234
63.345–63.347	2060–0327
63.363–63.367	2060–0283
63.403–63.406	2060–0268
63.420	2060–0325
63.422–63.428	2060–0325
63.467–63.468	2060–0273
63.525–63.528	2060–0290
63.548–63.550	2060–0296
63.563–63.567	2060–0289
63.653	2060–0340
63.654	2060–0340
63.703–63.707	2060–0326
63.752–63.753	2060–0341
63.787 (a)–(b)	2060–0330
63.788 (a)–(c)	2060–0330
63.806–63.807	2060–0324
63.829–63.830	2060–0335
63.1311	2060–0351
63.1314	2060–0351
63.1315	2060–0351
63.1319	2060–0351
63.1320	2060–0351
63.1325–63.1332	2060–0351
63.1335	2060–0351
Chemical Accident Prevention Provisions	
68.120 (a), (e), and (g)	2050–0127
State Operating Permit Programs	
70.3–70.11	2060–0243
Federal Operating Permit Programs	
71.5	2060–0336
71.6(a),(c),(d),(g)	2060–0336
71.7	2060–0336
71.9(e)–(j)	2060–0336
71.24–71.26	2060–0276
Permits Regulation	
72.7–72.10	2060–0258
72.20–72.25	2060–0258
72.30–72.33	2060–0258
72.40–72.44	2060–0258
72.50–72.51	2060–0258
72.60–72.69	2060–0258
72.70–72.74	2060–0258
72.80–72.85	2060–0258
72.90–72.96	2060–0258
Allowance System	
73.10–73.13	2060–0261
73.16	2060–0261
73.18–73.21	2060–0261
73.30–73.38	2060–0258
73.50–73.53	2060–0258
73.70–73.77	2060–0221
73.80–73.86	2060–0258
73.90	2060–0258
Sulfur Dioxide Opt-ins	
74.12	2060–0258
74.14	2060–0258
74.16	2060–0258
74.18	2060–0258
74.20	2060–0258
74.22	2060–0258
74.24–74.25	2060–0258
74.41	2060–0258
74.43–74.44	2060–0258
74.46–74.47	2060–0258
74.60–74.64	2060–0258

40 CFR citation	OMB control No.
Continuous Emission Monitoring	
75.4–75.5	2060–0258
75.10–75.18	2060–0258
75.20–75.24	2060–0258
75.30–75.34	2060–0258
75.40–75.48	2060–0258
75.50–75.52	2060–0258
75.53–75.56	2060–0258
75.60–75.67	2060–0258
Nitrogen Oxides Emission Reduction Program	
76.8–76.15	2060–0258
Excess Emissions	
77.3–77.6	2060–0258
Appeal Procedures for Acid Rain Program	
78.1–78.20	2060–0258
Registration of Fuels and Fuel Additives	
79.10–79.11	2060–0150
79.20–79.21	2060–0150
79.31–79.33	2060–0150
79.51(a), (c), (d), (g), (h)	2060–0150
79.52	2060–0150
79.57(a)(5)	2060–0150
79.57(f)(5)	2060–0150
79.58(e)	2060–0150
79.59(b)–(d)	2060–0150
79.60	2060–0150
79.61(e)	2060–0150
79.62–79.68	2060–0297
Regulation of Fuels and Fuel Additives	
80.20	2060–0066
80.25	2060–0066
80.27	2060–0178
80.29(c)	2060–0308
80.141(c)–(f)	2060–0275
80.157	2060–0275
80.158	2060–0275
80.160	2060–0275
80.161	2060–0275
80.162	2060–0275
80.163(d)(3)	2060–0275
80.164	2060–0275
80.165	2060–0275
80.166	2060–0275
80.167(d)	2060–0275
80.170	2060–0275
80.171	2060–0275
80.173	2060–0275
Protection of Stratospheric Ozone	
82.9–82.13	2060–0170
82.21	2060–0170
82.36	2060–0247
82.38	2060–0247
82.40	2060–0247
82.42	2060–0247
82.122	2060–0259
82.156	2060–0256
82.160–82.162	2060–0256
82.164	2060–0256
82.166	2060–0256
82.176(a)	2060–0226
82.176(c)(3)	2060–0226
82.178	2060–0226
82.180	2060–0350
82.180(a)(5)	2060–0226
82.180(b)(3)	2060–0226
82.184(c)	2060–0226
82.184(e)	2060–0226
Control of Air Pollution From Motor Vehicles and Motor Vehicle Engines	
85.503	2060–0104
85.505	2060–0104
85.1503–85.1507	2060–0095
85.1509–85.1510	2060–0095
85.1511(b)–(d), (f)	2060–0095
85.1511(b)(3)	2060–0007
85.1512	2060–0095
85.1514–85.1515	2060–0095
85.1703	2060–0124
85.1705–85.1706	2060–0007
85.1901–85.1909	2060–0048
85.2112–85.2123	2060–0065
85.2114	2060–0016
85.2115	2060–0016
Control of Air Pollution From New and In-Use Motor Vehicles and New and In-Use Motor Vehicle Engines: Certification and Test Procedures	
86.079–31–86.079–33	2060–0104
86.079–36	2060–0104
86.079–39	2060–0104
86.080–12	2060–0104
86.082–34	2060–0104
86.085–13	2060–0104
86.085–37	2060–0104
86.087–38	2060–0104
86.090–14	2060–0104
86.090–21	2060–0104
86.090–25	2060–0104
86.090–26	2060–0104
86.090–27	2060–0104
86.091–7	2060–0104
86.091–15	2060–0104
86.091–21	2060–0104
86.091–23	2060–0104
86.091–28	2060–0104
86.091–30	2060–0104
86.092–14	2060–0104
86.092–15	2060–0104
86.092–23	2060–0104
86.092–24	2060–0104
86.092–26	2060–0104
86.092–35	2060–0104
86.094–7–86.094–9	2060–0104
86.094–15–86.094–16	2060–0104
86.094–17	2060–0104
86.094–18	2060–0104
86.094–21	2060–0104
86.094–23	2060–0104
86.094–24(a)(3)(iii)	2060–0314
86.094–25	2060–0104
86.094–30	2060–0104
86.094–35	2060–0104
86.095–14	2060–0104
86.095–23	2060–0104
86.095–24	2060–0104
86.095–26	2060–0104
86.095–30	2060–0104
86.095–35	2060–0104
86.094–38	2060–0104
86.096–7	2060–0104
86.096–8	2060–0104

40 CFR citation	OMB control No.
86.096–9	2060–0104
86.096–10	2060–0104
86.096–14	2060–0104
86.096–21	2060–0104
86.096–23	2060–0104
86.096–24	2060–0104
86.096–26	2060–0104
86.096–30	2060–0104
86.096–35	2060–0104
86.097–9	2060–0104
86.098–23	2060–0104
86.098–28	2060–0104
86.099–8	2060–0104
86.099–9	2060–0104
86.099–10	2060–0104
86.111–94	2060–0104
86.113–82	2060–0104
86.113–87	2060–0104
86.113–90	2060–0104
86.113–91	2060–0104
86.113–94	2060–0104
86.135–82	2060–0104
86.135–90	2060–0104
86.135–94	2060–0104
86.142–90	2060–0104
86.144–90	2060–0104
86.144–94	2060–0104
86.150–98	2060–0104
86.336–79	2060–0104
86.337–79	2060–0104
86.412–78	2060–0104
86.414–78	2060–0104
86.415–78	2060–0104
86.416–80	2060–0104
86.421–78	2060–0104
86.423–78	2060–0104
86.427–78	2060–0104
86.428–80	2060–0104
86.429–78	2060–0104
86.431–78	2060–0104
86.432–78	2060–0104
86.434–78	2060–0104
86.435–78	2060–0104
86.436–78	2060–0104
86.437–78	2060–0104
86.438–78	2060–0104
86.439–78	2060–0104
86.440–78	2060–0104
86.513–94	2060–0104
86.537–90	2060–0104
86.542–90	2060–0104
86.603–88	2060–0064
86.604–84	2060–0064
86.605–88	2060–0064
86.606–84	2060–0064
86.607–84	2060–0064
86.608–88	2060–0064
86.608–90	2060–0064
86.608–96	2060–0104
86.609–84	2060–0064
86.609–96	2060–0104
86.612–84	2060–0064
86.614–84	2060–0064
86.615–84	2060–0064
86.709–94	2060–0104
86.709–99	2060–0104
86.884–5	2060–0104
86.884–7	2060–0104
86.884–9	2060–0104
86.884–10	2060–0104
86.884–12	2060–0104
86.884–13	2060–0104
86.1003–90	2060–0064
86.1004–84	2060–0064
86.1005–90	2060–0064
86.1006–84	2060–0064
86.1007–84	2060–0064
86.1008–90	2060–0064
86.1008–96	2060–0104
86.1009–84	2060–0064
86.1009–96	2060–0104
86.1012–84	2060–0064
86.1014–84	2060–0064
86.1015–87	2060–0064
86.1106–87	2060–0132
86.1108–87	2060–0132
86.1110–87	2060–0132
86.1111–87	2060–0104
86.1112–87–86.1115–87	2060–0132
86.1213–85	2060–0104
86.1213–87	2060–0104
86.1242–85	2060–0104
86.1242–90	2060–0104
86.1308–84	2060–0104
86.1310–90	2060–0104
86.1311–94	2060–0104
86.1313–84	2060–0104
86.1313–87	2060–0104
86.1313–90	2060–0104
86.1313–91	2060–0104
86.1313–94	2060–0104
86.1314–84	2060–0104
86.1316–84	2060–0104
86.1316–90	2060–0104
86.1319–84	2060–0104
86.1319–90	2060–0104
86.1321–84	2060–0104
86.1321–90	2060–0104
86.1323–84	2060–0104
86.1327–84	2060–0104
86.1327–88	2060–0104
86.1327–90	2060–0104
86.1332–84	2060–0104
86.1332–90	2060–0104
86.1334–84	2060–0104
86.1335–90	2060–0104
86.1336–84	2060–0104
86.1340–84	2060–0104
86.1340–90	2060–0104
86.1341–90	2060–0104
86.1342–90	2060–0104
86.1344–94	2060–0104
86.1413	2060–0104
86.1427	2060–0104
86.1432	2060–0104
86.1434	2060–0104
86.1437	2060–0104
86.1442	2060–0104
86.1542–84	2060–0104
86.1544–84	2060–0104
86.2500	2060–0104
Clean–Fuel Vehicles	
88.104–94 (a), (c), (e), (f), (g), (h), (i), (j), (k)	2060–0104
88.105–94	2060–0104
88.204–94(b)(1)	2060–0314
88.204–94(c)	2060–0314
88.305–94	2060–0104
88.306–94(a), (b) introductory text	2060–0104
88.306–94(b)(1)	2060–0314
88.306–94(b)(2)	2060–0314
88.306–94(b)(4)	2060–0314
88.306–94(c)	2060–0314
88.306–94(f)	2060–0314

40 CFR citation	OMB control No.
Control of Emissions From New and In-Use Nonroad Engines	
89.1	2060–0124
89.2	2060–0124
89.114–96–89.120–96	2060–0287
89.122–96–89.127–96	2060–0287
89.129–96	2060–0287
89.203–96–89.207–96	2060–0287
89.209–96–89.211–96	2060–0287
89.304–96–89.331–96	2060–0287
89.404–96–89.424–96	2060–0287
89.505–89.905	2060–0064
89.511	2060–0064
89.512	2060–0064
89.603–89.605	2060–0095
89.607–89.610	2060–0095
89.611	2060–0007, 2060–0095
89.612	2060–0095
89.801	2060–0048
89.803	2060–0048
89.903	2060–0048
89.905	2060–0007
89.906	2060–0007
Control of Emissions From New and In-use Nonroad Engines	
90.107–90.108	2060–0338
90.113	2060–0338
90.115–90.124	2060–0338
90.126	2060–0338
90.304–90.329	2060–0338
90.404–90.427	2060–0338
90.505–90.509	2060–0295
90.511–90.512	2060–0295
90.604	2060–0294
90.611–90.613	2060–0294
90.800	2060–0048
90.802–90.804	2060–0048
90.806	2060–0048
90.903	2060–0124
90.905–90.906	2060–0007
Determining Conformity of Federal Actions to State or Federal Implementation Plans	
93.150–93.160	2060–0279
Mandatory Patent Licenses	
95.2	2060–0307
Oil Pollution Prevention	
112.1–112.7	2050–0021
Oil Pollution Prevention; Non-Transportation-Related Onshore Facilities	
112.20	2050–0135
Designation, Reportable Quantities, and Notification for Hazardous Substances	
116.4	2050–0046
117.3	2050–0046
117.21	2050–0046

40 CFR citation	OMB control No.
EPA Administered Permit Programs: The National Pollutant Discharge Elimination System	
122.21(f)–(l)	2040–0086, 2040–0170
122.21(j)(4)	2040–0150
122.21(m)–(p)	2040–0068, 2040–0170
122.26(c), (d)	2040–0086
122.41(h)	2040–0068, 2040–0170
122.41(j)	2040–0009, 2040–0110, 2040–0170
122.41(l)	2040–0110, 2040–0068, 2040–0170
122.42(c)	2040–0086
122.42(a), (b), (l)	2040–0068, 2040–0170
122.44(g), (i)	2040–0004, 2040–0170
122.44(r)	2040–0180
122.45(b)	2040–0004, 2040–0110
122.45(b)(4)	2040–0068
122.47(a)	2040–0110, 2040–0170
122.47(b)	2040–0110, 2040–0068, 2040–0170
122.48	2040–0004, 2040–0170
122.62(a)	2040–0068, 2040–0170
122.63	2040–0068, 2040–0170
State Permit Requirements	
123.21–123.24	2040–0057, 2040–0170
123.25	2040–0004, 2040–0110, 2040–0170, 2040–0180
123.26–123.29	2040–0057, 2040–0170
123.43	2040–0057, 2040–0170
123.44	2040–0057, 2040–0170, 2040–0180
123.45	2040–0057, 2040–0170
123.62	2040–0057, 2040–0170, 2040–0180
123.63	2040–0057, 2040–0170, 2040–0180
123.64	2040–0057, 2040–0170
Procedures for Decisionmaking	
124.5	2040–0068
124.31	2050–0149
124.32	2050–0149
124.33	2050–0149
124.53–124.54	2040–0057

40 CFR citation	OMB control No.
Criteria and Standards for the National Pollutant Discharge Elimination System	
125.59–125.67, and Appendix A and B	2040–0088
Water Quality Planning and Management	
130.6–130.10	2040–0071
130.15	2040–0071
Water Quality Standards Regulation	
131.1	2040–0180
131.5	2040–0180
131.6–131.8	2040–0049
131.20	2040–0049
131.21	2040–0049, 2040–0180
131.22	2040–0049
131.31–131.36	2040–0049
Water Quality Guidance for the Great Lakes System	
132.1	2040–0180
132.2	2040–0180
132.3	2040–0180
132.4	2040–0180
132.5	2040–0180
Part 132, Appendix A	2040–0180
Part 132, Appendix B	2040–0180
Part 132, Appendix C	2040–0180
Part 132, Appendix D	2040–0180
Part 132, Appendix E	2040–0180
Part 132, Appendix F	2040–0180
National Primary Drinking Water Regulations	
141.2	2040–0090
141.4	2040–0090
141.11–141.15	2040–0090
141.21–141.22	2040–0090
141.23–141.24	2040–0090
141.25–141.30	2040–0090
141.31–141.32	2040–0090
141.33–141.35	2040–0090
141.40	2040–0090
141.41–141.43	2040–0090
141.50–141.52	2040–0090
141.60–141.63	2040–0090
141.70–141.75	2040–0090
141.80–141.91	2040–0090
141.100	2040–0090
141.110–141.111	2040–0090
141.140–141.144	2040–0183
National Primary Drinking Water Regulations Implementation	
142.2–142.3	2040–0090
142.10–142.15	2040–0090
142.16	2060–0090
142.17–142.24	2040–0090
142.56–142.57	2040–0090
142.60–142.61	2040–0090
142.62	2040–0090
142.63–142.64	2040–0090
142.70–142.78	2040–0090
142.81–142.81	2040–0090
Underground Injection Control Program	
144.8	2040–0042
144.12	2040–0042
144.14–144.15	2040–0042
144.23	2040–0042
144.25–144.28	2040–0042
144.31–144.33	2040–0042
144.38	2040–0042
144.41	2040–0042
144.51–144.55	2040–0042
144.62–144.66	2040–0042
144.70	2040–0042
Underground Injection Control Program: Criteria and Standards	
146.10	2040–0042
146.12–146.15	2040–0042
146.22–146.25	2040–0042
146.32–146.35	2040–0042
146.52	2040–0042
146.64	2040–0042
146.66–146.73	2040–0042
State Underground Injection Control Programs	
147.104	2040–0042
147.304–147.305	2040–0042
147.504	2040–0042
147.754	2040–0042
147.904	2040–0042
147.1154	2040–0042
147.1354–147.1355	2040–0042
147.1454	2040–0042
147.1654	2040–0042
147.1954	2040–0042
147.2103–147.2104	2040–0042
147.2154	2040–0042
147.2402	2040–0042
147.2905	2040–0042
147.2912–147.2913	2040–0042
147.2915	2040–0042
147.2918	2040–0042
147.2920–147.2926	2040–0042
147.2929	2040–0042
147.3002–147.3003	2040–0042
147.3006–147.3007	2040–0042
147.3011	2040–0042
147.3014–147.3016	2040–0042
147.3101	2040–0042
147.3104–147.3105	2040–0042
147.3107–147.3109	2040–0042
Hazardous Waste Injection Restrictions	
148.5	2040–0042
148.20–148.23	2040–0042
Pesticide Registration and Classification Procedures	
152.46	2070–0060
152.50	2070–0024, 2070–0040, 2070–0060
152.80	2070–0040, 2070–0060
152.85	2070–0040, 2070–0060
152.98	2070–0060
152.122	2070–0060
152.132	2070–0044
152.135	2070–0060
152.164	2070–0060
152.404	2070–0040, 2070–0060
152.406	2070–0040, 2070–0060

40 CFR citation	OMB control No.
152.412	2070–0040, 2070–0060
152.414	2070–0040, 2070–0060
Registration Standards	
155.30	2070–0057
Labeling Requirements for Pesticides and Devices	
156.36	2070–0052
156.206	2070–0060
156.208	2070–0060
156.210	2070–0060
156.212	2070–0060
Packaging Requirements for Pesticides and Devices	
157.22	2070–0052
157.24	2070–0052
157.34	2070–0052
157.36	2070–0052
Data Requirements for Registration	
158.30	2070–0040, 2070–0057, 2070–0060, 2070–0107
158.32	2070–0040, 2070–0053, 2070–0057, 2070–0060, 2070–0107
158.34	2070–0040, 2070–0057, 2070–0060, 2070–0107
158.45	2070–0040, 2070–0057, 2070–0060, 2070–0107
158.75	2070–0040, 2070–0057, 2070–0060, 2070–0107
158.101	2070–0040, 2070–0057, 2070–0060, 2070–0107
158.155	2070–0040, 2070–0057, 2070–0060, 2070–0107
158.160	2070–0040, 2070–0057, 2070–0060, 2070–0107
158.162	2070–0040, 2070–0057, 2070–0060, 2070–0107
158.165	2070–0040, 2070–0057, 2070–0060, 2070–0107
158.167	2070–0040, 2070–0057, 2070–0060, 2070–0107
158.170	2070–0040, 2070–0057, 2070–0060, 2070–0107
158.175	2070–0040, 2070–0057, 2070–0060, 2070–0107
158.180	2070–0040, 2070–0057, 2070–0060, 2070–0107
158.190	2070–0040, 2070–0057, 2070–0060, 2070–0107
158.240	2070–0057, 2070–0060, 2070–0107
158.290	2070–0057, 2070–0060, 2070–0107
158.340	2070–0057, 2070–0060, 2070–0107
158.390	2070–0057, 2070–0060, 2070–0107
158.440	2070–0057, 2070–0060, 2070–0107
158.490	2070–0057, 2070–0060, 2070–0107
158.540	2070–0057, 2070–0060, 2070–0107
158.590	2070–0057, 2070–0060, 2070–0107
158.640	2070–0057, 2070–0060, 2070–0107
158.690	2070–0057, 2070–0060, 2070–0107
158.740	2070–0057, 2070–0060, 2070–0107
Good Laboratory Practice Standards	
Part 160	2070–0024, 2070–0032, 2070–0040, 2070–0055, 2070–0057, 2070–0060, 2070–0107
State Registration of Pesticide Products	
162.153	2070–0055
Certification of Usefulness of Pesticide Chemicals	
163.4	2070–0060, 2070–0024
163.5	2070–0060, 2070–0024

40 CFR citation	OMB control No.
Exemption of Federal and State Agencies for Use of Pesticides Under Emergency Conditions	
166.20	2070–0032
166.32	2070–0032
166.43	2070–0032
166.50	2070–0032
Registration of Pesticide and Active Ingredient Producing Establishments, Submission of Pesticide Reports	
Part 167	2070–0078
Statements of Enforcement Policies and Interpretations	
168.65	2070–0027
168.75	2070–0027
168.85	2070–0027, 2070–0028, 2070–0078
Books and Records of Pesticide Production and Distribution	
169.2	2070–0028
Worker Protection Standards for Agricultural Pesticides	
Part 170	2070–0148
Certification of Pesticide Applicators	
171.7	2070–0029
171.8	2070–0029
171.9	2070–0029
171.10	2070–0029
171.11	2070–0029
Experimental Use Permits	
172.4	2070–0040
172.8	2070–0040
Issuance of Food Additive Regulations	
177.81	2070–0024
177.92	2070–0024
177.98	2070–0024
177.99	2070–0024
177.102	2070–0024
177.105	2070–0024
177.110	2070–0024
177.116	2070–0024
Tolerances and Exemptions from Tolerances for Pesticide Chemicals in or on Raw Agricultural Commodities	
180.7	2070–0024
180.8	2070–0024
180.9	2070–0024
180.31	2070–0024
180.32	2070–0024
180.33	2070–0024
404 State Program Regulations	
233.10–233.12	2040–0168
233.21	2040–0168
233.30	2040–0168
233.50	2040–0168
233.52	2040–0168
233.61	2040–0140

40 CFR citation	OMB control No.
Criteria for Classification of Solid Waste Disposal Facilities and Practices	
257.24	2050–0154
257.25	2050–0154
257.27	2050–0154
Criteria for Municipal Solid Waste Landfills	
Part 258	2050–0122
258.10–258.16	2050–0122
258.20	2050–0122
258.23	2050–0122
258.28–258.29	2050–0122
258.51	2050–0122
258.53–258.55	2050–0122
258.57–258.58	2050–0122
258.60–258.61	2050–0122
258.71–258.74	2050–0122
Hazardous Waste Management System: General	
260.20–260.22	2050–0053
260.23	2050–0145
260.31–260.33	2050–0053
Identification and Listing of Hazardous Waste	
261.3	2050–0085
261.4	2050–0053
261.35	2050–0115
Standards Applicable to Generators of Hazardous Waste	
262.12	2050–0028
262.20	2050–0039
262.22–262.23	2050–0039
262.34	2050–0035, 2050–0085
262.40(a)	2050–0039
262.40(b)	2050–0024
262.40(c)	2050–0035
262.41	2050–0024
262.42	2050–0039
262.43	2050–0035
262.44(a)–(b)	2050–0039
262.44(c)	2050–0035
262.53–262.57	2050–0035
262.60	2050–0035
Standards Applicable to Transporters of Hazardous Waste	
263.11	2050–0028
263.20–263.22	2050–0039
263.30	2050–0039
Standards for Owners and Operators of Hazardous Waste Treatment, Storage, and Disposal Facilities	
264.11	2050–0028
264.12 (a)	2050–0120
264.13	2050–0120, 2050–0009
264.14	2050–0009
264.15	2050–0120, 2050–0009
264.16	2050–0120, 2050–0009
264.17	2050–0120
264.18	2050–0009
264.19	2050–0009
264.32	2050–0009
264.35	2050–0009

40 CFR citation	OMB control No.
264.37	2050–0120
264.51	2050–0009
264.52	2050–0009
264.53	2050–0120
264.54	2050–0120
264.56	2050–0120
264.71	2050–0039
264.72	2050–0039
264.73	2050–0120
264.74	2050–0120
264.75	2050–0024
264.76	2050–0039
264.90	2050–0009
264.96	2050–0120
264.97 (g)	2050–0120
264.97 (h)	2050–0009
264.97 (j)	2050–0120
264.98 (c), (g)(1), (g)(5), (g)(6)	2050–0033
264.98 (g)(4), (h)	2050–0009
264.99 (c), (g), (h)(1), (i)(1), (i)(2)	2050–0033
264.99 (h)(2), (i)(3), (j)	2050–0009
264.100 (e), (f), (g)	2050–0033
264.100 (h)	2050–0009
264.101	2050–0120
264.112 (a), (b), (c)	2050–0009
264.112 (d)	2050–0120
264.113 (a), (b), (d)	2050–0120
264.113 (e)	2050–0050
264.115	2050–0120
264.116	2050–0120
264.118	2050–0009
264.119 (a), (b)	2050–0120
264.119 (c)	2050–0009
264.120	2050–0120
264.142 (a)	2050–0009
264.142 (b), (c), (d)	2050–0120
264.143	2050–0120
264.144 (a)	2050–0009
264.144 (b), (c), (d)	2050–0120
264.145	2050–0120
264.147 (a)(7), (b)(7), (f),(g)	2050–0120
264.147 (a)(1), (b)(1), (c), (f), (g), (h), (i), (j)	2050–0009
264.148	2050–0120
264.149	2050–0009
264.150	2050–0009
264.190	2050–0050
264.191	2050–0050
264.192 (a)	2050–0009
264.192 (g)	2050–0050
264.193 (c), (d), (e), (g), (h)	2050–0009
264.193 (i)	2050–0050
264.196	2050–0050
264.197 (b)	2050–0050
264.197 (c)	2050–0009
264.221	2050–0009
264.222 (a)	2050–0009
264.222 (b)	2050–0050
264.223 (a)	2050–0009
264.223 (b), (c)	2050–0050
264.226 (c)	2050–0050, 2050–0009
264.226 (d)	2050–0050
264.227	2050–0050
264.231	2050–0009
264.251	2050–0009
264.252 (a)	2050–0009
264.252 (b)	2050–0050
264.253 (a)	2050–0009
264.253 (b), (c)	2050–0050
264.254	2050–0050
264.259	2050–0009
264.271	2050–0009
264.272	2050–0009
264.276	2050–0050, 2050–0009
264.278 (a)–(f), (h)	2050–0050
264.278 (g)	2050–0050, 2050–0009
264.280	2050–0050
264.283	2050–0009
264.301	2050–0009
264.302 (a)	2050–0009
264.302 (b)	2050–0050
264.303 (a)	2050–0009
264.303 (b)	2050–0050
264.304 (a)	2050–0009
264.304 (b), (c)	2050–0050
264.314	2050–0050
264.317	2050–0009
264.340	2050–0009
264.343	2050–0050
264.344	2050–0009
264.347	2050–0050
264.552	2050–0009
264.570	2050–0050
264.571	2050–0050
264.573	2050–0050
264.574	2050–0050
264.575	2050–0009
264.603	2050–0050
264.1033 (a)	2050–0009
264.1033 (j)	2050–0050
264.1034	2050–0050
264.1035	2050–0050
264.1036	2050–0050
264.1061	2050–0050
264.1062	2050–0050
264.1063	2050–0050
264.1064	2050–0050, 2050–0009
264.1065	2050–0050
264.1089	2060–0318
264.1090	2060–0318
264.1100	2050–0050
264.1101	2050–0050

Interim Status Standards for Owners and Operators of Hazardous Waste Treatment, Storage, and Disposal Facilities

265.11	2050–0028
265.12 (a)	2050–0120
265.13	2050–0120
265.15	2050–0120
265.16	2050–0120
265.19	2050–0120
265.37	2050–0120
265.51	2050–0120
265.52	2050–0120
265.53	2050–0120
265.54	2050–0120
265.56	2050–0120
265.71	2050–0039
265.72	2050–0039
265.73	2050–0120
265.75	2050–0024
265.76	2050–0039
265.90	2050–0033
265.92	2050–0033
265.93	2050–0033
265.94	2050–0033
265.112	2050–0120
265.113 (a), (b), (d)	2050–0120
265.113 (e)	2050–0050
265.115	2050–0120
265.116	2050–0120

40 CFR citation	OMB control No.
265.118	2050–0120
265.119	2050–0120
265.120	2050–0120
265.142	2050–0120
265.143	2050–0120
265.144	2050–0120
265.145	2050–0120
265.147	2050–0120
265.148	2050–0120
265.149	2050–0120
265.150	2050–0120
265.190	2050–0035, 2050–0050
265.191	2050–0035, 2050–0050
265.192	2050–0035, 2050–0050
265.193	2050–0035, 2050–0050
265.195	2050–0120
265.196	2050–0035, 2050–0050
265.197 (b)	2050–0050
265.197 (c)	2050–0120
265.221	2050–0050
265.222	2050–0050
265.223	2050–0050
265.225	2050–0050
265.226	2050–0050
265.229	2050–0050
265.254	2050–0050
265.255	2050–0050
265.259	2050–0050
265.260	2050–0050
265.273	2050–0120
265.276	2050–0050
265.278	2050–0050
265.280	2050–0050
265.301	2050–0050
265.302	2050–0050
265.303	2050–0050
265.304	2050–0050
265.314	2050–0050
265.340	2050–0050
265.352	2050–0050
265.383	2050–0050
265.404	2050–0050
265.440	2050–0050
265.441	2050–0050
265.443	2050–0050
265.444	2050–0050
265.445	2050–0120
265.1033	2050–0050
265.1034	2050–0050
265.1035	2050–0050
265.1061	2050–0050
265.1062	2050–0050
265.1063	2050–0050
265.1064	2050–0050
265.1090	2060–0318
265.1100	2050–0050
265.1101	2050–0050
Standards for the Management of Specific Hazardous Wastes and Specific Types of Hazardous Waste Management Facilities	
266.70 (b)	2050–0028
266.70 (c)	2050–0050
266.80	2050–0028
266.100	2050–0073
266.102	2050–0073
266.103	2050–0073
266.104	2050–0073
266.106	2050–0073
266.107	2050–0073
266.108	2050–0073
266.109	2050–0073
266.111	2050–0073
266.112	2050–0073
Appendix IX	2050–0073
Land Disposal Restrictions	
268.4–268.5	2050–0085
268.6	2050–0062
268.7	2050–0085
268.9	2050–0085
268.42	2050–0085
268.44	2050–0085
EPA Administered Permit Programs: The Hazardous Waste Permit Program	
270.1	2050–0028, 2050–0034, 2050–0009
270.10	2050–0009
270.11	2050–0034
270.13	2050–0034
270.14	2050–0009
270.14 (b)(21)	2050–0062, 2050–0085
270.15	2050–0009
270.16	2050–0009
270.17	2050–0009
270.18	2050–0009
270.19	2050–0009
270.20	2050–0009
270.21	2050–0009
270.22	2050–0073
270.23	2050–0009
270.24	2050–0009
270.25	2050–0009
270.26	2050–0115
270.30	2050–0120
270.33	2050–0009
270.40	2050–0009
270.41	2050–0009
270.42	2050–0009
270.51	2050–0009
270.62	2050–0009, 2050–0149
270.63	2050–0009
270.65	2050–0009
270.66	2050–0073, 2050–0149
270.72	2050–0034
270.73	2050–0009
Requirements for Authorization of State Hazardous Waste Programs	
271.5–271.8	2050–0041
271.20–271.21	2050–0041
271.23	2050–0041
Standards for Universal Waste Management	
273.14	2050–0145
273.15	2050–0145
273.18	2050–0145
273.32	2050–0145
273.34	2050–0145
273.35	2050–0145
273.38	2050–0145

40 CFR citation	OMB control No.
273.39	2050–0145
273.61	2050–0145
273.62	2050–0145
273.80	2050–0145
Standards for Management of Used Oil	
279.10–279.11	2050–0124
279.42	2050–0028, 2050–0124
279.43–279.44	2050–0124
279.46	2050–0050
279.51	2050–0028
279.52–279.55	2050–0124
279.56	2050–0050
279.57	2050–0050, 2050–0124
279.62	2050–0028
279.63	2050–0124
279.65–279.66	2050–0050
279.72	2050–0050
279.73	2050–0028
279.74–279.75	2050–0050
279.82	2050–0124
Technical Standards and Corrective Action Requirements for Owners and Operators of Underground Storage Tanks (USTs)	
280.11(a)	2050–0068
280.20(a)–(b)	2050–0068
280.20(e)	2050–0068
280.22(a)–(f)	2050–0068
280.22(g)	2050–0068
280.31	2050–0068
280.33(f)	2050–0068
280.34(a)	2050–0068
280.34(b)	2050–0068
280.34(c)	2050–0068
280.40	2050–0068
280.43	2050–0068
280.44	2050–0068
280.45	2050–0068
280.50	2050–0068
280.53	2050–0068
280.61	2050–0068
280.62	2050–0068
280.63	2050–0068
280.64	2050–0068
280.65	2050–0068
280.66(a)	2050–0068
280.66(c)	2050–0068
280.66(d)	2050–0068
280.67	2050–0068
280.71(a)	2050–0068
280.72(a)	2050–0068
280.74	2050–0068
280.95	2050–0068
280.96	2050–0068
280.97	2050–0068
280.98	2050–0068
280.99	2050–0068
280.100	2050–0068
280.101	2050–0068
280.102	2050–0068
280.103	2050–0068
280.104	2050–0068
280.105	2050–0068
280.106	2050–0068
280.107	2050–0068
280.108	2050–0068
280.109(a)	2050–0068
280.109(b)	2050–0068
280.110	2050–0068
280.111	2050–0068
280.111(b)(11)	2050–0068
280.114(a)–(d)	2050–0068
280.114(e)	2050–0068
Approval of State Underground Storage Tank Programs	
281.120(a)	2050–0068
281.120(g)	2050–0068
281.121	2050–0068
281.122	2050–0068
281.124	2050–0068
281.125	2050–0068
281.140	2050–0068
281.143(a)	2050–0068
281.150	2050–0068
281.152	2050–0068
281.161	2050–0068
National Oil and Hazardous Substances Pollution Contingency Plan	
300.405	2050–0046
300.425	2050–0095
300.430	2050–0096
300.435	2050–0096
300.920	2050–0141
Part 300, Appendix A	2050–0095
Designation, reportable quantities, and notification	
302.4	2050–0046
302.6	2050–0046
302.8	2050–0086
Hazardous Substances Superfund; Response Claims Procedures	
307.11–307.14	2050–0106
307.21–307.23	2050–0106
307.30–307.32	2050–0106
Reimbursement to Local Governments for Emergency Response to Hazardous Substance Releases	
310.05	2050–0077
310.10–310.12	2050–0077
310.20	2050–0077
310.30	2050–0077
310.40	2050–0077
310.50	2050–0077
310.60	2050–0077
310.70	2050–0077
310.80	2050–0077
310.90	2050–0077
Part 310, Appendix II	2050–0077
Worker Protection Standards for Hazardous Waste Operations and Emergency Response	
311.1–311.2	2050–0105
Trade Secrecy Claims for Emergency Planning and Community Right-to-Know; Health Professionals	
350.5–350.16	2050–0078
350.27	2050–0078
350.40	2050–0078
Emergency planning and notification	
Part 355, Appendix A, Appendix B	2050–0046

40 CFR citation	OMB control No.
Toxic Chemical Release Reporting: Community Right-to-Know	
Part 372	2070–0093
Part 372, subpart A	2070–0093, 2070–0143
372.22	2070–0093, 2070–0143
372.25	2070–0093
372.27	2070–0143
372.30	2070–0093, 2070–0143
372.38	2070–0093, 2070–0143
Part 372, subpart C	2070–0093, 2070–0143
Part 372, subpart D	2070–0093, 2070–0143
372.85	2070–0093
372.95	2070–0143
General Pretreatment Regulations for Existing and New Sources of Pollution	
403.5(b)	2040–0009
403.6–403.7	2040–0009
403.8(a)–(e)	2040–0009
403.8(f)	2040–0009
403.9–403.10	2040–0009
403.12(b)–(g)	2040–0009
403.12 (h), (i)	2040–0009
403.12 (j), (k), (l), (o)	2040–0009
403.12 (m), (p)	2040–0009
403.13	2040–0009
403.15	2040–0009
403.17–403.18	2040–0009, 2040–0170
Steam Electric Generating Point Source Category	
423.12–423.13	2040–0033
423.15	2040–0033
Pulp, Paper, and Paperboard Point Source Category	
430.14–430.17	2040–0033
430.24–430.27	2040–0033
430.54–430.57	2040–0033
430.64–430.67	2040–0033
430.74–430.77	2040–0033
430.84–430.87	2040–0033
430.94–430.97	2040–0033
430.104–430.107	2040–0033
430.114–430.117	2040–0033
430.134–430.137	2040–0033
430.144–430.147	2040–0033
430.154–430.157	2040–0033
430.164–430.167	2040–0033
430.174–430.177	2040–0033
430.184–430.187	2040–0033
430.194–430.197	2040–0033
430.204–430.207	2040–0033
430.214–430.217	2040–0033
430.224–430.227	2040–0033
430.234–430.237	2040–0033
430.244–430.247	2040–0033
430.254–430.257	2040–0033
430.264–430.267	2040–0033
The Builders' Paper and Board Mills Point Source Category	
431.14–431.17	2040–0033
Pharmaceutical Manufacturing Point Source Category	
439.14–439.17	2040–0033
439.24–439.27	2040–0033
439.34–439.37	2040–0033
439.44–439.47	2040–0033
Coil Coating Point Source Category	
465.03	2040–0033
Porcelain Enameling Point Source Category	
466.03	2040–0033
Aluminum Forming Point Source Category	
467.03	2040–0033
State Sludge Management Program Requirements	
501.15(a)	2040–0086, 2040–0110
501.15(b)	2040–0004, 2040–0068, 2040–0110
501.15(c)	2040–0068
501.16	2040–0057
501.21	2040–0057
Standards for the Use or Disposal of Sewage Sludge	
503.17–503.18	2040–0157
503.27–503.28	2040–0157
503.47–503.48	2040–0157
Fuel Economy of Motor Vehicles	
600.006–86	2060–0104
600.007–80	2060–0104
600.010–86	2060–0104
600.113–88	2060–0104
600.113–93	2060–0104
600.206–86	2060–0104
600.207–86	2060–0104
600.209–85	2060–0104
600.306–86	2060–0104
600.307–86	2060–0104
600.311–86	2060–0104
600.312–86	2060–0104
600.313–86	2060–0104
600.314–86	2060–0104
600.507–86	2060–0104
600.509–86	2060–0104
600.510–86	2060–0104
600.512–86	2060–0104
Toxic Substances Control Act: General	
700.45	2070–0012, 2070–0038
Reporting and Recordkeeping Requirements	
704.5	2010–0019, 2070–0067
704.11	2010–0019, 2070–0067
704.25	2070–0067
704.33	2070–0067
704.43	2070–0067
704.45	2070–0067
704.95	2070–0067
704.102	2070–0067

40 CFR citation	OMB control No.
704.104	2070–0067
704.175	2070–0067
Chemical Imports and Exports	
707.65	2070–0030
707.67	2070–0030
707.72	2070–0030
Inventory Reporting Regulations	
Part 710	2070–0070
Chemical Information Rules	
712.5	2070–0054
712.7	2070–0054
712.20	2070–0054
712.28	2070–0054
712.30	2070–0054
Health and Safety Data Reporting	
716.5	2070–0004
716.10	2070–0004
716.20	2070–0004
716.25	2070–0004
716.30	2070–0004
716.35	2070–0004
716.40	2070–0004
716.45	2070–0004
716.50	2070–0004
716.60	2070–0004
716.65	2070–0004
716.105	2070–0004
716.120	2070–0004
Records and Reports of Allegations that Chemical Substances Cause Significant Adverse Reactions to Health or the Environment	
717.5	2070–0017
717.7	2070–0017
717.12	2070–0017
717.15	2070–0017
717.17	2070–0017
Premanufacture Notification	
720.1	2070–0012
720.22	2070–0012
720.25	2070–0012
720.30	2070–0012
720.36	2070–0012
720.38	2070–0012
Part 720, subpart C	2070–0012
720.62	2070–0012
720.75	2070–0012
720.78	2070–0012
720.80	2070–0012
720.85	2070–0012
720.87	2070–0012
720.90	2070–0012
720.102	2070–0012
Part 720, Appendix A	2070–0012
Significant New Uses of Chemical Substances	
Part 721, subpart A	2070–0012, 2070–0038
721.72	2070–0012, 2070–0038
721.125	2070–0012, 2070–0038
721.160	2070–0012, 2070–0038
721.170	2070–0012, 2070–0038
721.185	2070–0012, 2070–0038
721.225	2070–0012
721.267	2070–0012
721.275	2070–0012
721.285	2070–0012
721.320	2070–0012
721.323	2070–0012
721.325	2070–0012
721.336	2070–0012
721.370	2070–0012
721.390	2070–0012
721.400	2070–0012
721.415	2070–0012
721.430	2070–0012
721.445	2070–0012
721.460	2070–0012
721.470	2070–0012
721.484	2070–0012
721.490	2070–0012
721.505	2070–0012
721.520	2070–0012
721.530	2070–0012
721.536	2070–0012
721.540	2070–0012
721.550	2070–0012
721.562	2070–0012
721.575	2070–0012
721.600	2070–0012
721.625	2070–0012
721.639	2070–0012
721.642	2070–0012
721.646	2070–0012
721.650	2070–0038
721.700	2070–0012
721.715	2070–0012
721.750	2070–0012
721.757	2070–0012
721.775	2070–0012
721.785	2070–0012
721.805	2070–0012
721.825	2070–0012
721.840	2070–0012
721.875	2070–0012
721.925	2070–0012
721.950	2070–0012
721.982	2070–0012
721.1000	2070–0012
721.1025	2070–0038
721.1050	2070–0012
721.1068	2070–0012
721.1075	2070–0012
721.1120	2070–0012
721.1150	2070–0012
721.1175	2070–0012
721.1187	2070–0012
721.1193	2070–0012
721.1210	2070–0012
721.1225	2070–0012
721.1240	2070–0012
721.1300	2070–0012
721.1325	2070–0012
721.1350	2070–0012
721.1372	2070–0012
721.1375	2070–0012
721.1425	2070–0038
721.1430	2070–0038
721.1435	2070–0038
721.1440	2070–0038

40 CFR citation	OMB control No.
721.1450	2070–0012
721.1500	2070–0012
721.1525	2070–0012
721.1550	2070–0012
721.1555	2070–0012
721.1568	2070–0012
721.1575	2070–0012
721.1612	2070–0012
721.1625	2070–0012
721.1630	2070–0012
721.1637	2070–0012
721.1640	2070–0012
721.1643	2070–0012
721.1645	2070–0012
721.1650	2070–0012
721.1660	2070–0038
721.1675	2070–0012
721.1700	2070–0012
721.1725	2070–0012
721.1728	2070–0012
721.1732	2070–0012
721.1735	2070–0012
721.1737	2070–0012
721.1738	2070–0012
721.1740	2070–0012
721.1745	2070–0012
721.1750	2070–0012
721.1755	2070–0012
721.1765	2070–0012
721.1769	2070–0012
721.1775	2070–0012
721.1790	2070–0038
721.1800	2070–0012
721.1820	2070–0012
721.1825	2070–0012
721.1850	2070–0012
721.1875	2070–0012
721.1900	2070–0012
721.1920	2070–0012
721.1925	2070–0012
721.1950	2070–0012
721.2025	2070–0012
721.2050	2070–0012
721.2075	2070–0012
721.2084	2070–0038
721.2085	2070–0012
721.2086	2070–0012
721.2088	2070–0012
721.2089	2070–0012
721.2092	2070–0038
721.2095	2070–0012
721.2097	2070–0012
721.2120	2070–0012
721.2140	2070–0012
721.2170	2070–0012
721.2175	2070–0012
721.2250	2070–0012
721.2260	2070–0012
721.2270	2070–0012
721.2275	2070–0012
721.2287	2070–0038
721.2340	2070–0012
721.2355	2070–0038
721.2380	2070–0012
721.2410	2070–0012
721.2420	2070–0012
721.2475	2070–0012
721.2520	2070–0012
721.2527	2070–0012
721.2540	2070–0012
721.2560	2070–0012
721.2565	2070–0012
721.2575	2070–0012
721.2600	2070–0038
721.2625	2070–0012
721.2650	2070–0012
721.2675	2070–0012
721.2725	2070–0038
721.2750	2070–0012
721.2800	2070–0038
721.2815	2070–0012
721.2825	2070–0012
721.2840	2070–0012
721.2860	2070–0012
721.2880	2070–0012
721.2900	2070–0012
721.2920	2070–0012
721.2930	2070–0012
721.2940	2070–0012
721.2950	2070–0012
721.3000	2070–0012
721.3020	2070–0012
721.3028	2070–0012
721.3034	2070–0012
721.3040	2070–0012
721.3060	2070–0012
721.3063	2070–0012
721.3080	2070–0012
721.3100	2070–0012
721.3120	2070–0012
721.3140	2070–0012
721.3152	2070–0012
721.3160	2070–0038
721.3180	2070–0012
721.3200	2070–0012
721.3220	2070–0038
721.3248	2070–0012
721.3260	2070–0012
721.3320	2070–0012
721.3340	2070–0012
721.3350	2070–0038
721.3360	2070–0012
721.3364	2070–0012
721.3374	2070–0012
721.3380	2070–0012
721.3390	2070–0012
721.3420	2070–0012
721.3430	2070–0038
721.3435	2070–0012
721.3437	2070–0012
721.3440	2070–0012
721.3460	2070–0012
721.3480	2070–0012
721.3486	2070–0012
721.3500	2070–0012
721.3520	2070–0012
721.3560	2070–0012
721.3620	2070–0012
721.3625	2070–0012
721.3627	2070–0012
721.3628	2070–0012
721.3629	2070–0012
721.3640	2070–0012
721.3680	2070–0012
721.3700	2070–0012
721.3720	2070–0012
721.3740	2070–0012
721.3760	2070–0012
721.3764	2070–0012
721.3780	2070–0012
721.3790	2070–0012
721.3800	2070–0012
721.3815	2070–0012
721.3840	2070–0012
721.3860	2070–0012
721.3870	2070–0012

40 CFR citation	OMB control No.
721.3880	2070–0012
721.3900	2070–0012
721.4000	2070–0012
721.4020	2070–0012
721.4040	2070–0012
721.4060	2070–0012
721.4080	2070–0038
721.4100	2070–0012
721.4110	2070–0012
721.4128	2070–0012
721.4133	2070–0012
721.4140	2070–0038
721.4155	2070–0038
721.4160	2070–0038
721.4180	2070–0038
721.4200	2070–0012
721.4215	2070–0012
721.4220	2070–0012
721.4240	2070–0012
721.4250	2070–0012
721.4255	2070–0012
721.4260	2070–0012
721.4270	2070–0012
721.4280	2070–0012
721.4300	2070–0012
721.4320	2070–0012
721.4340	2070–0012
721.4360	2070–0038
721.4380	2070–0012
721.4390	2070–0012
721.4400	2070–0012
721.4420	2070–0012
721.4460	2070–0012
721.4463	2070–0012
721.4466	2070–0012
721.4470	2070–0012
721.4473	2070–0012
721.4484	2070–0012
721.4480	2070–0012
721.4490	2070–0012
721.4494	2070–0012
721.4497	2070–0012
721.4500	2070–0012
721.4520	2070–0012
721.4550	2070–0012
721.4568	2070–0012
721.4585	2070–0012
721.4587	2070–0012
721.4590	2070–0012
721.4594	2070–0012
721.4600	2070–0012
721.4620	2070–0012
721.4640	2070–0012
721.4660	2070–0012
721.4663	2070–0012
721.4668	2070–0012
721.4680	2070–0012
721.4685	2070–0012
721.4700	2070–0012
721.4720	2070–0012
721.4740	2070–0038
721.4780	2070–0012
721.4790	2070–0012
721.4794	2070–0012
721.4800	2070–0012
721.4820	2070–0012
721.4840	2070–0012
721.4880	2070–0012
721.4925	2070–0038
721.5050	2070–0012
721.5075	2070–0012
721.5175	2070–0038
721.5192	2070–0012
721.5200	2070–0012
721.5225	2070–0012
721.5250	2070–0012
721.5275	2070–0012
721.5276	2070–0012
721.5278	2070–0012
721.5282	2070–0012
721.5285	2070–0012
721.5300	2070–0012
721.5310	2070–0012
721.5325	2070–0012
721.5330	2070–0012
721.5350	2070–0012
721.5375	2070–0012
721.5385	2070–0012
721.5400	2070–0012
721.5425	2070–0012
721.5450	2070–0012
721.5475	2070–0012
721.5500	2070–0012
721.5525	2070–0012
721.5540	2070–0012
721.5545	2070–0012
721.5550	2070–0012
721.5575	2070–0012
721.5600	2070–0038
721.5700	2070–0012
721.5705	2070–0012
721.5710	2070–0038
721.5740	2070–0012
721.5760	2070–0012
721.5763	2070–0012
721.5769	2070–0012
721.5780	2070–0012
721.5800	2070–0012
721.5820	2070–0012
721.5840	2070–0012
721.5860	2070–0012
721.5880	2070–0012
721.5900	2070–0012
721.5910	2070–0012
721.5915	2070–0012
721.5920	2070–0012
721.5930	2070–0012
721.5960	2070–0012
721.5970	2070–0012
721.5980	2070–0012
721.5990	2070–0012
721.6000	2070–0038
721.6020	2070–0012
721.6060	2070–0012
721.6070	2070–0012
721.6080	2070–0012
721.6085	2070–0012
721.6090	2070–0012
721.6097	2070–0012
721.6100	2070–0012
721.6110	2070–0012
721.6120	2070–0012
721.6140	2070–0012
721.6160	2070–0012
721.6180	2070–0012
721.6186	2070–0012
721.6200	2070–0012
721.6220	2070–0012
721.6440	2070–0012
721.6470	2070–0012
721.6500	2070–0012
721.6520	2070–0012
721.6540	2070–0012
721.6560	2070–0012
721.6580	2070–0012
721.6600	2070–0012

40 CFR citation	OMB control No.
721.6620	2070–0012
721.6625	2070–0012
721.6640	2070–0012
721.6660	2070–0012
721.6680	2070–0012
721.6700	2070–0012
721.6720	2070–0012
721.6740	2070–0012
721.6760	2070–0012
721.6780	2070–0012
721.6820	2070–0012
721.6840	2070–0012
721.6880	2070–0012
721.6900	2070–0012
721.6920	2070–0012
721.6940	2070–0012
721.6960	2070–0012
721.6980	2070–0012
721.7000	2070–0012
721.7020	2070–0012
721.7040	2070–0012
721.7046	2070–0012
721.7080	2070–0012
721.7100	2070–0012
721.7140	2070–0012
721.7160	2070–0012
721.7180	2070–0012
721.7200	2070–0012
721.7210	2070–0012
721.7220	2070–0012
721.7240	2070–0012
721.7260	2070–0012
721.7280	2070–0012
721.7300	2070–0012
721.7320	2070–0012
721.7340	2070–0012
721.7360	2070–0012
721.7370	2070–0012
721.7400	2070–0012
721.7420	2070–0012
721.7440	2070–0012
721.7450	2070–0012
721.7460	2070–0012
721.7480	2070–0012
721.7500	2070–0012
721.7540	2070–0012
721.7560	2070–0012
721.7580	2070–0012
721.7600	2070–0012
721.7620	2070–0012
721.7655	2070–0012
721.7660	2070–0012
721.7680	2070–0012
721.7780	2070–0012
721.7710	2070–0012
721.7720	2070–0012
721.7700	2070–0012
721.7740	2070–0012
721.7760	2070–0012
721.7770	2070–0012
721.8075	2070–0012
721.8082	2070–0012
721.8090	2070–0012
721.8100	2070–0012
721.8155	2070–0012
721.8160	2070–0012
721.8170	2070–0012
721.8175	2070–0012
721.8225	2070–0012
721.8250	2070–0012
721.8265	2070–0012
721.8275	2070–0012
721.8290	2070–0012
721.8300	2070–0012
721.8325	2070–0012
721.8335	2070–0012
721.8350	2070–0012
721.8375	2070–0012
721.8400	2070–0012
721.8425	2070–0012
721.8450	2070–0012
721.8475	2070–0012
721.8500	2070–0012
721.8525	2070–0012
721.8550	2070–0012
721.8575	2070–0012
721.8600	2070–0012
721.8650	2070–0012
721.8654	2070–0012
721.8670	2070–0012
721.8673	2070–0012
721.8675	2070–0012
721.8700	2070–0012
721.8750	2070–0012
721.8775	2070–0012
721.8825	2070–0012
721.8850	2070–0012
721.8875	2070–0012
721.8900	2070–0012
721.8965	2070–0012
721.9000	2070–0038
721.9075	2070–0012
721.9100	2070–0012
721.9220	2070–0012
721.9240	2070–0012
721.9260	2070–0012
721.9280	2070–0012
721.9300	2070–0012
721.9320	2070–0012
721.9360	2070–0012
721.9400	2070–0012
721.9420	2070–0012
721.9460	2070–0012
721.9470	2070–0038
721.9480	2070–0012
721.9495	2070–0012
721.9500	2070–0012
721.9505	2070–0012
721.9507	2070–0012
721.9510	2070–0012
721.9520	2070–0012
721.9525	2070–0012
721.9526	2070–0012
721.9527	2070–0012
721.9530	2070–0012
721.9540	2070–0012
721.9550	2070–0012
721.9570	2070–0012
721.9580	2070–0038
721.9620	2070–0012
721.9630	2070–0012
721.9650	2070–0012
721.9656	2070–0012
721.9658	2070–0012
721.9660	2070–0038
721.9665	2070–0012
721.9675	2070–0012
721.9680	2070–0012
721.9700	2070–0012
721.9720	2070–0012
721.9730	2070–0012
721.9740	2070–0012
721.9750	2070–0012
721.9780	2070–0012
721.9800	2070–0012
721.9820	2070–0012

40 CFR citation	OMB control No.
721.9850	2070–0012
721.9870	2070–0012
721.9892	2070–0012
721.9900	2070–0012
721.9920	2070–0012
721.9925	2070–0012
721.9930	2070–0038
721.9940	2070–0012
721.9957	2070–0038
721.9970	2070–0012
721.9975	2070–0012
Premanufacture Notification Exemptions	
723.50	2070–0012
723.175	2070–0012
723.250(m)(1)	2070–0012
Lead-Based Paint Poisioning Prevention in Certain Residential Structures	
Part 745, subpart F	2070–0151
Part 745, subpart L	2070–0155
Part 745, subpart Q	2070–0155
Water Treatment Chemicals	
Part 749, subpart D	2060–0193
749.68	2060–0193
Polychlorinated Biphenyls (PCBs) Manufacturing, Processing, Distribution in Commerce, and Use Prohibitions	
761.20	2070–0008, 2070–0021
761.30	2070–0003, 2070–0008, 2070–0021
761.60	2070–0011
761.65	2070–0112
761.70	2070–0011
761.75	2070–0011
761.80	2070–0021
761.93	2070–0149
761.93(a)(1)(iii)	2070–0149
761.93(b)	2070–0149
761.125	2070–0112
761.180	2070–0112
761.185	2070–0008
761.187	2070–0008
761.193	2070–0008
761.202	2070–0112
761.205	2070–0112
761.207	2070–0112
761.207(a)	2050–0039
761.208	2070–0112
761.209	2070–0112
761.210	2070–0112
761.211	2070–0112
761.215	2070–0112
761.218	2070–0112
Asbestos	
Part 763, subpart E	2070–0091
Part 763, subpart G	2070–0072
Part 763, subpart I	2070–0082
Dibenzo-para-dioxin/Dibenzofurans	
766.35(b)(1)	2070–0054
766.35(b)(2)	2070–0054
766.35(b)(3)	2070–0017
766.35(b)(4)(iii)	2070–0054
766.35(c)(1)(i)	2070–0054
766.35(c)(1)(ii)	2070–0054
766.35(c)(1)(iii)	2070–0017
766.35(d) Form	2070–0017
766.38	2070–0054
Procedures Governing Testing Consent Agreements and Test Rules	
790.5	2070–0033
790.42	2070–0033
790.45	2070–0033
790.50	2070–0033
790.55	2070–0033
790.60	2070–0033
790.62	2070–0033
790.68	2070–0033
790.80	2070–0033
790.82	2070–0033
790.85	2070–0033
790.99	2070–0033
Good Laboratory Practice Standards	
Part 792	2010–0019, 2070–0004, 2070–0017, 2070–0033, 2070–0054, 2070–0067
Provisional Test Guidelines	
795.45	2070–0067
795.232	2070–0033
Identification of Specific Chemical Substance and Mixture Testing Requirements	
799.1053	2070–0033
799.1250	2070–0033
799.1560	2070–0033
799.1575	2070–0033
799.1645	2070–0033
799.1700	2070–0033
799.2155	2070–0033
799.2325	2070–0033
799.2475	2070–0033
799.2500	2070–0033
799.2700	2070–0033
799.3300	2070–0033
799.4360	2070–0033
799.4440	2070–0033
799.5000	2070–0033
799.5025	2070–0033
799.5050	2070–0033
799.5055	2070–0033
799.5075	2070–0033

[1] The ICRs referenced in this section of the table encompass the applicable general provisions contained in 40 CFR part 60, subpart A, which are not independent information collection requirements.

[2] The ICRs referenced in this section of the table encompass the applicable general provisions contained in 40 CFR part 61, subpart A, which are not independent information collection requirements.

[3] The ICRs referenced in this section of the table encompass the applicable general provisions contained in 40 CFR part 63, subpart A, which are not independent information collection requirements.

[58 FR 27472, May 10, 1993]

EDITORIAL NOTE: For Federal Register citations affecting §9.1 see the List of CFR Sections Affected in the Finding Aids section of this volume.

List of CFR Sections Affected

All changes in this volume of the Code of Federal Regulations which were made by documents published in the FEDERAL REGISTER since January 1, 1986, are enumerated in the following list. Entries indicate the nature of the changes effected. Page numbers refer to FEDERAL REGISTER pages. The user should consult the entries for chapters and parts as well as sections for revisions.

Title 40 was established at 36 FR 12213, June 29, 1971. For the period before January 1, 1986, see the ''List of CFR Sections Affected, 1964–1972 and 1973–1985'' published in six separate volumes.

1986

40 CFR

51 FR Page

Chapter I

117.3 Table 117.3 revised 34547
122.21 (g) introductory text revised; (h), (i) heading, (j) heading, and (k) through (o) redesignated as (i), (j) heading, (k) heading, and (l) through (p); new (h) and (k) text added; OMB number 26991
122.62 (a)(2) amended..... 26993
(a)(7) revised; eff. 7–7–86 20431
122.63 (g) added; eff. 7–7–86 20431
124.62 (b)(1) and (3) removed; (b)(2) and (4) redesignated as (b)(1) and (2); (e) and (f) added 16030
124.63 (a)(1) revised 16030
131.33 Removed..... 11581

1987

40 CFR

52 FR Page

Chapter I

110 Revised..... 10719
123 State program approved..... 45823
131.34 Added 9105

1988

40 CFR

53 FR Page

Chapter I

122.21 (c)(2) removed; (c)(1) redesignated as (c) 4158

40 CFR—Continued

53 FR Page

Chapter I—Continued

(d)(2)(ii) removed 33007
122.26 Removed 4158
123.62 (e) amended..... 33007
122.63 (g) revised 40616
124.2 (a) amended 37410
124.5 (c) (1) and (3) revised 37934
124.10 (c)(1) (viii) and (ix) redesignated as (c)(1) (ix) and (x); new (c)(1)(viii) added 28147
(c)(1)(iii) revised 37410

1989

40 CFR

54 FR Page

Chapter I

116 Technical correction..... 47022
116.4 Tables amended..... 33482
117 Technical correction..... 47022
117.3 Table revised; Note republished 33482
122.1 (g) (5) through (8) redesignated as (g) (7) through (10); (b) (3) and (4) and (g) (5) and (6) added; (a)(1), (d)(2), and new (g)(7) revised..... 18781
122.2 Amended 254, 18781, 23895
122.3 (e) revised 254
(d) corrected 258
122.5 (a) revised..... 18782
122.21 (m) (1) through (4), (n)(2) and (o) revised..... 254

40 CFR—Continued

54 FR Page

Chapter I—Continued

(a) and (d)(3) revised; (c) redesignated as (c)(1); (c)(2) and (p) introductory text added 18782

122.26 Added 255

122.28 (b)(2)(i)(A) removed; (b)(2)(i) (B) through (F) redesignated as (b)(2)(i) (A) through (E) 258

(a)(1) and (2)(ii) introductory text amended; (a)(2)(ii) (B) and (C), and (b)(2)(i) (B), (C), and (F) revised.....18782

122.29 (c)(4)(i) corrected 258

(c) (4) and (5) removed.....255

122.41 (a)(2), (i) introductory text, and (j)(5) revised; (a)(3) added.....255

(a)(1), (d), (j)(4), and (l)(4) (i) and (ii) revised; (l)(1)(iii) and (j)(2) introductory text added 18783

122.44 (l)(2) and (o) revised 256

(b) redesignated as (b)(1); (b)(2), (c)(4), and (j)(3) added; (i)(1)(iii) and (l)(1) revised; (i)(2) amended.....18783

(d)(1) revised 23895

(e) heading revised.....23896

122.45 (a) corrected.....258

(b)(1) revised 18784

122.47 (a)(3)(i) revised.....18784

122.62 (a)(15) removed; (a) (16), (17), and (18) redesignated as (a) (15), (16), and (17).....256

Introductory text corrected 258

(a) (1) and (7) revised; (a)(18) added 18784

122.64 (a)(4) revised 18784

123 NPDES State program approval.....40664

123.1 (g) revised.....256

(b) and (c) revised 18784

123.2 Revised 18784

123.22 (f) added 18784

123.24 (d) introductory text amended; (d)(8) added.....18784

123.25 (a) introductory text and (37) revised.....18784

123.26 (e)(5) revised 18785

123.27 Second note corrected 258

123.44 (c) (5) and (6) revised 18785

(c)(8) added 23896

123.45 (e) added.....18785

123.46 Added 256

(a) revised; (c), (d), (e), and (f) added 23896

40 CFR—Continued

54 FR Page

Chapter I—Continued

123.63 (a)(5) added.....23897

124.1 (a) amended.....9607, 18785

124.2 (a) amended 18785

124.3 (c) amended 18785

124.5 (d) amended 18785

124.6 (d)(4)(v) revised.....18785

124.8 (a) amended 18786

124.10 (c)(2)(i) Note corrected 258

(c)(1)(ii) revised; (c)(2)(i) and (d)(1)(vii) amended.....18786

124.12 (a)(2) corrected.....258

124.15 (a) amended; (b) introductory text revised.....9607

124.19 (a) introductory text amended 9607

124.56 (a) corrected.....258

(a), (b)(1)(iv), and (c) revised; (e) added 18786

124.59 (b) corrected.....258

124.62 (e) introductory text revised.....256

(c) and (d) corrected.....258

124.65 Removed.....258

124.71 (a) amended.....18786

124.111 (a)(1)(i) amended.....18786

125.3 (a)(2) revised.....257

125.21 Revised 257

125.23 Introductory text revised.....257

125.24 Introductory text and (b) revised 257

125.27 (a) revised 257

130.1 (a) amended; interim 14359

130.2 (b) through (m) redesignated as (c) through (n); new (b) added; interim 14359

130.4 (a) amended; interim 14359

130.6 (d) revised; interim 14360

130.10 (d) added 258

(d) (4) through (11) added.....23897

130.15 Added; interim 14360

131.35 Added 28625

133.103 (e) added.....4228

135 Authority citation revised.....20771

135.1—135.3 Designated as Subpart A and Subpart heading added; nomenclature change.....20771

135.10—135.13 (Subpart B) Added 20771

1990

40 CFR

55 FR Page

Chapter I

122.1 (b)(2)(iv) revised 48062
122.21 (j)(1) through (4) added..... 30128
(c)(1), (g)(7) introductory text and (k) introductory text revised; (f)(7) and (g)(3) amended; (f)(9) and (g)(10) removed 48062
122.22 (b) introductory text revised..... 48063
122.26 Revised 48063
122.28 (b)(2)(i) revised..... 48072
122.42 (c) added..... 48073
122 Appendixes E through I added..... 48073
123 Interpretative rule..... 22748, 26201
123.25 (a)(9) revised 48075
124.52 Revised 48075
130 Interpretative rule..... 22748, 26201

1991

40 CFR

56 FR Page

Chapter I

122.26 (e)(2)(i) amended; (e)(2)(iii) revised 12100
(e)(1) amended; (e)(2)(iv) and (6) revised..... 56554
131.3 (j) revised; (k) and (l) added..... 64893
131.4 Revised 64893
131.5 (a) through (e) redesignated as (a)(1) through (5); introductory text designated as (a) introductory text; (b) added 64894
131.7 Added 64894
131.8 Added 64895
131.34 Removed..... 13593
135 Authority citation revised..... 11515
135.1 Revised 11515
135.4 Added 11515
135.5 Added 11515

1992

40 CFR

57 FR Page

Chapter I

88 Added 60046
91.215 (a) revised 34618
112 Authority citation revised..... 52705
112.6 Revised; interim 52705

40 CFR—Continued

57 FR Page

Chapter I—Continued

114 Authority citation revised..... 52705
114.1 Revised; interim 52705
114.10 Amended 5334
114.11 (c) removed; (a) and (b) redesignated as (b) and (c); new (a) added; new (b), (c)(4) and (d) revised 5334
117 Authority citation revised..... 52706
117.22 Revised 52706
122.26 (b)(15) added; (c)(2)(i)(D), (e)(1), (2)(i), (iii) and (iv) revised..... 11412
(e)(7) added 60447
122.28 (b)(2) redesignated as (b)(3); new (b)(2) added 11412
(b)(3)(ii) and (c)(3) amended 11413
122.42 (d) added 60448
122.44 (i)(2) revised; (i)(3) through (5) added 11413
(d)(1)(vi)(B) revised..... 33049
123.46 (a) revised 33049
123.64 (b)(3)(ii)(B) revised 5335
124.2 Amended..... 5335
Amended 60129
124.5 (b) amended 60129
124.19 (a) introductory text and (c) amended; (a)(2), (b), (d) introductory text, (e), (f)(1)(i), (ii) and (iii) revised; (g) added 5335
124.72 Amended 5335
124.74 (b)(1) amended 5336
124.75 (b) amended 5336
124.78 (a)(2) amended 5336
Correctly designated 30657
124.89 (b)(1) and (2) revised 5336
124.90 (a) and (c) amended; (b) introductory text and (d) revised 5336
124.91 (a)(1) introductory text and (g) amended; (a)(1)(ii), (3), (b), (c)(1), (2), (d), (e), (f), and (h) revised; (i) added 5336
124.115 Amended..... 5337
124.124 Amended..... 5337
124.125 Revised 5337
124.126 Revised 5337
124.127 Revised 5337
124.128 Revised 5337
124 Appendix A amended 5337, 5338

40 CFR—Continued

57 FR Page

Chapter I—Continued

130.7 (d)(1) redesignated in part as (d)(2); (b) revised; (c)(1) introductory text, (ii), (2), (d) introductory text, (1), (2) and (e) amended 33049
130.8 (b)(5) added 33050
130.10 (b)(2) and (d)(3) revised 33050
131 Authority citation revised 60910
131.36 Added 60910

1993

40 CFR

58 FR Page

Chapter I

88 Authority citation revised 11901
88.301–93—88.313–93 (Subpart C) Added 11901
88.302-94 Added 64691
88.308-94 Revised 64692
93 Added 62235
93.150—93.160 (Subpart B) Added (OMB number pending) 63253
93.150 (c)(2)(i) corrected 67442
110 Technical correction 48424
110.1 Amended 45036
112 Technical correction 48424
112.2 (k) amended 45037
116 Technical correction 48424
116.3 Amended 45037
117 Technical correction 48424
117.1 Amended 45037
117.3 Table amended; eff. 7–30–93 35327
122 OMB number 34370
Technical correction 48424
122.1 (b)(4) amended; OMB number 9413
122.2 Amended 45037, 67980
122.21 (c)(2)(i), (ii) and (iii) redesignated as (c)(2)(ii), (iii) and (v); new (c)(2)(ii) and (iii) revised; new (c)(2)(i) and (iv) added 9413
122.41 OMB number 18016
122.44 OMB number 18016
122.48 OMB number 18016
123.1 (b) and (h) revised; (d) redesignated as (b)(1); (b)(2) added 67981
123.21 (a)(1) revised; (b) redesignated as (b)(1); (b)(2) added 67981
123.22 (g) added 67981
123.23 (b) revised 67981

40 CFR—Continued

58 FR Page

Chapter I—Continued

123.24 (b)(1) redesignated as (b)(1)(i); (b)(1)(ii) added 67981
123.25 (a)(4) revised 9414
123.25 (a)(12) revised 67981
123.27 (e) added 67981
123.31 Added 67981
123.32 Added 67982
123.33 Added 67982
123.34 Added 67983
123.62 (a) amended 67983
124 Authority citation revised 67983
124.2 Amended 67983
124.51 (c) added 67983
131.36 (b)(1) table corrected 31177, 31178
Regulation at 58 FR 31178 corrected 34499
(d)(14)(ii) amended 36142

1994

40 CFR

59 FR Page

Chapter I

88.101–94 Redesignated as 88.102–94; new 88.101–94 added (OMB number pending) 50074
88.102–94 Redesignated as 88.103–94; new 88.102–94 redesignated from 88.101–94 and amended 50074
88.103–94 Redesignated from 88.102–94 and amended 50074
88.104–94 Added (OMB number pending) 50074
88.105–94 Added 50077
88.201–94 (a) revised (OMB number pending) 50077
88.201–94—88.206–94 (Subpart B) Tables revised 50079
88.204–94 Added (OMB number pending) 50078
88.206–94 Added (OMB number pending) 50078
88.301–93—88.313–93 (Subpart C) Tables C93–6, C93–6.1 and C93–6.2 removed; Tables C94–1, C94–1.1, C94–1.2, C94–1.3, C94–2, C94–2.1, C94–2.2, C94–2.3, C94–3, C94–3.1, C94–3.2 and C94–3.3 revised 50082
88.302–94 Amended 50080
88.305–94 Added 50080
88.306–94 Added (OMB number pending) 50080

40 CFR—Continued

59 FR Page

Chapter I —Continued

88.308–94 Added 50082
88.311–93 (a)(1)(iii), (c) and (d) revised 48536
(c) and (d) revised 50082
88.311–98 Added 16309
89 Added 31335
89.114–96 OMB number pending 31341
89.115–96 OMB number pending 31341
89.116–96 OMB number pending 31341
89.117–96 OMB number pending 31342
89.118–96 OMB number pending 31342
89.119–96 OMB number pending 31342
89.120–96 OMB number pending 31342
89.122–96 OMB number pending 31342
89.123–96 OMB number pending 31342
89.124–96 OMB number pending 31343
89.125–96 OMB number pending 31343
89.126–96 OMB number pending 31343
89.127–96 OMB number pending 31344
89.129–96 OMB number pending 31344
89.203–96 OMB number pending 31346
89.204–96 OMB number pending 31346
89.205–96 OMB number pending 31346
89.206–96 OMB number pending 31346
89.207–96 OMB number pending 31346
89.209–96 OMB number pending 31346
89.210–96 OMB number pending 31347
89.211–96 OMB number pending 31347
89.304–96 OMB number pending 31348
89.305–96 OMB number pending 31348

40 CFR—Continued

59 FR Page

Chapter I —Continued

89.306–96 OMB number pending 31348
89.307–96 OMB number pending 31348
89.308–96 OMB number pending 31349
89.309–96 OMB number pending 31349
89.310–96 OMB number pending 31349
89.311–96 OMB number pending 31350
89.312–96 OMB number pending 31351
89.313–96 OMB number pending 31352
89.314–96 OMB number pending 31351
89.315–96 OMB number pending 31351
89.316–96 OMB number pending 31351
89.317–96 OMB number pending 31351
89.318–96 OMB number pending 31351
89.319–96 OMB number pending 31352
89.320–96 OMB number pending 31353
89.321–96 OMB number pending 31353
89.322–96 OMB number pending 31353
89.323–96 OMB number pending 31354
89.324–96 OMB number pending 31354
89.325–96 OMB number pending 31354
89.326–96 OMB number pending 31354
89.327–96 OMB number pending 31354
89.328–96 OMB number pending 31354
89.329–96 OMB number pending 31354
89.330–96 OMB number pending 31354
89.331–96 OMB number pending 31355
89.404–96 OMB number pending 31360

40 CFR—Continued

59 FR Page

Chapter I —Continued

89.405–96 OMB number pending 31360
89.406–96 OMB number pending 31361
89.407–96 OMB number pending 31361
89.408–96 OMB number pending 31361
89.409–96 OMB number pending 31362
89.410–96 OMB number pending 31362
89.411–96 OMB number pending 31362
89.412–96 OMB number pending 31363
89.413–96 OMB number pending 31363
89.414–96 OMB number pending 31363
89.415–96 OMB number pending 31364
89.416–96 OMB number pending 31364
89.417–96 OMB number pending 31364
89.418–96 OMB number pending 31364
89.419–96 OMB number pending 31365
89.420–96 OMB number pending 31367
89.421–96 OMB number pending 31367
89.422–96 OMB number pending 31367
89.423–96 OMB number pending 31369
89.424–96 OMB number pending 31369
95 Added 67638
112 Authority citation revised 34097
Notice 53742
112.2 (a) through (l) designations removed; amended 34097
112.20 Added 34098
112.21 Added 34101
112 Existing Appendix redesignated as Appendix A; Appendixes B through F added 34102
Appendixes D, E and F corrected 49006
123.1 (h) amended 64343

40 CFR—Continued

59 FR Page

Chapter I —Continued

123.21 (a)(1) and (b)(2) amended 64343
123.22 (g) amended 64343
123.31 Heading revised; (a) introductory text and (4) amended 64343
123.32 Heading, introductory text, (b) introductory text, (c), (d) introductory text, (1) and (e) amended; (f) revised 64343
123.33 Heading and (a) amended; (b) through (e) removed; (f) redesignated as (b) 64343
124.2 Amended 64343
124.51 (c) amended 64343
125.56—125.68 (Subpart G) Authority citation revised 40658
Revised 40658
130.1 (a) amended; interim 13817
130.6 (d) introductory text amended; interim 13818
130.15 Heading and (a) amended; (a) designation, (b), (c) and (d) removed; interim 13818
131.3 (j) amended 64344
131.4 (c) amended 64344
131.7 (b)(2) amended 64344
131.8 Heading, (a) introductory text, (b) introductory text, (2) introductory text, (3) introductory text, (ii), (4) introductory text, (i), (5), (6), (c) introductory text, (1), (2) introductory text, (4) and (5) amended; (b)(3)(iii) removed; (b)(3)(iv) redesignated as (b)(3)(iii) 64344

1995

40 CFR

60 FR Page

Chapter I

90 Added 34598
93 Authority citation revised 40100
93.101 Amended 57184
93.102 (b)(3)(i) revised; interim 44763
(b)(3)(i) revised; (d) added 57184
93.114 Revised 57185
93.115 (a) amended; (d) added 57185
93.118 (b)(1)(ii) revised 57185

40 CFR—Continued

60 FR Page

Chapter I—Continued

93.128 (b)(2) and (c)(2) redesignated as (b)(3) and (c)(3); (a)(4), new (b)(2), new (c)(2) and (d)(4) added; new (c)(3)(iii) amended; interim; eff. 2–8–95 through 8–8–95 7452
(a)(3), (b)(1) introductory text and (d)(3) revised; (g)(1) and (2) removed; (b)(2), (c)(2) and (g)(3) redesignated as (b)(3), (c)(3) and (g)(1); new (b)(2) and (c)(2) added 40100
(g) removed; (h) and (i) redesignated as (g) and (h); (a) through (d) and new (g) revised 57186
93.130 (b)(5) redesignated (a)(6); (c)(1) amended 57186
110 Authority citation revised 33913
110.11 Removed 33913
117.3 Table amended; eff. 7–12–95 30938
122.1 (g) removed 33931
122.2 (m)(3), (4) and (n)(2) removed 33931
122.21 (c)(1) amended; eff. 8–2–95 17956
Regulation at 60 FR 17956 eff. date corrected to 8–7–95 19464
Regulation at 60 FR 17956 withdrawn 40230
(c)(1) amended 40235
122.26 (a)(1) introductory text and (e)(1)(ii) amended; (a)(9) and (g) added; (e) heading revised; eff. 8–2–95 17956
Regulation at 60 FR 17956 eff. date corrected to 8–7–95; (g)(1)(ii) corrected 19464
Regulation at 60 FR 17956 withdrawn 40230
(a)(1) introductory text and (e)(1)(ii) amended; (a)(9) and (g) added; (e) heading revised 40235
122.44 (r) added 15386
122.46 (d) removed 33931
122.62 (a)(14) and (17) removed 33931
122.63 (f) removed 33931
123.25 (a)(36) and (37) amended; (a)(38) added 15386
123.43 (b) removed 33931
123.44 (c)(9) added 15386

40 CFR—Continued

60 FR Page

Chapter I—Continued

123.62 (f) added 15386
123.63 (a)(6) added 15386
124.31 Added 63431
124.32 Added 63432
124.33 Added 63432
124.52 (c) amended; eff. 8–7–95 17957
Regulation at 60 FR 17956 eff. date corrected to 8–7–95 19464
Regulation at 60 FR 17957 withdrawn 40230
(c) amended 40235
124.58 Removed 33931
125.20—125.27 (Subpart C) Removed 33931
125.90—125.97 (Subpart J) Removed 33931
125.104 (b)(4)(iii) amended 53875
131.1 Revised 15386
131.5 (a)(5) revised; (b) redesignated as (c); new (b) added 15387
131.21 (b) revised 15387
131.36 (b)(1) Note added 22228
(b)(1) table and (c)(4)(iii) amended; (b)(2) revised; interim 22235
131.36 (b)(1) table corrected 44120
131.37 Added 4707
132 Added 15387

1996

40 CFR

61 FR Page

88.104–94 (l) removed; undesignated center heading added 127
88.204–94 (c)(2) introductory text and (ii) revised 127
88.205–94 (d)(1), (3)(iii) and (g) revised 127
88.301–93—88.313–93 (Subpart C) Table C94–1.1 revised 128
88.306–94 (b)(3) revised 129
88.311–93 (c) and (d) revised 127
88.312–93 (a)(1) and (c)(2)(ii) revised 128
89.2 Amended 52102
89.115–96 (d)(5) revised; second (b) redesignated as (e); (f) added; eff. 7–8–96 20741
89.908 Revised 52102
89.1003 (a)(6) and (b)(4) revised; (b)(5), (6) and (7) added 58106
90.103 (a) introductory text table revised 58300

40 CFR—Continued

61 FR Page

90.107 (d)(5) and (7) revised; (g) added; eff. 7–8–96 20742
90.109 (c) added 58301
90.118 (d) revised; eff. 7–8–96 20742
90.903 Revised 52102
90.908 Revised 52102
91 Added (OMB numbers pending) 52102
110.1 Amended; introductory text revised 7421
110.2 Revised 7421
110.3 Revised 7421
110.4 Removed; new 110.4 redesignated from 110.8 7421
110.5 Revised 7421
110.6 Redesignated from 110.10 and amended 7421
Corrected 14032
110.7 Removed 7421
110.8 Redesignated as 110.4 7421
110.9 First and second section removed 7421
110.10 Redesignated as 110.6 7421
112.6 Removed 9647
114 Removed 9648
117.22 Removed 9648
122 Interpretation 41698
123.30 Added 20980

40 CFR—Continued

61 FR Page

125.60 (c)(1) removed; (c)(2) and (3) redesignated as (c)(1) and (2); new (c)(1) introductory text revised 45833
131 Notice of availability 65183
131.31 (b) and (c) added 20693
131.32 Added 64822
131.36 (d)(13)(ii) amended 60617

1997

(Regulations published from January 1, 1997, through July 1, 1997)

40 CFR

62 FR Page

87.1 (a) amended; eff. 7–7–97 25365
87.2 Amended; eff. 7–7–97 25365
87.21 (d) and (e)(3) revised; eff. 7–7–97 25365
87.60 (c) revised; eff. 7–7–97 25366
87.61 Revised; eff. 7–7–97 25366
87.62 (a)(2) revised; eff. 7–7–97 25366
87.64 Revised; eff. 7–7–97 25366
87.71 Revised; eff. 7–7–97 25366
87.82 Revised; eff. 7–7–97 25366
87.89 Revised; eff. 7–7–97 25366
91.329 (a) corrected 20066
91.501 (a)(1) and (2) added 15808
132 Tables 3 and 4 amended 11731